KYOCERA mita

KM-1510
KM-1810

PARTS LIST

Published in Dec.'00
842A1120

CONTENTS

FIG. 1 EXTERIOR COVERS · 2
FIG. 2 FRAMES · 4
FIG. 3 CASSETTE · 6
FIG. 4 CONVEYING SECTION · 8
FIG. 5 DOCUMENT FEEDER (KM-1510) · · · · · · · · · · · · · · · 10
FIG. 6 AUTO DOCUMENT FEEDER I (KM-1810) · · · · · · · · · 12
FIG. 7 AUTO DOCUMENT FEEDER II (KM-1810) · · · · · · · · 14
FIG. 8 OPTICAL SECTION · 16
FIG. 9 LASER SCANNER UNIT · 18
FIG. 10 IMAGING UNIT(DEVELOPING) · · · · · · · · · · · · · · · · 20
FIG. 11 IMAGING UNIT(CLEANING) · · · · · · · · · · · · · · · · · · 22
FIG. 12 FIXING SECTION · 24
FIG. 13 DRIVING SECTION · 26
FIG. 14 ELECTRICAL COMPONENTS · · · · · · · · · · · · · · · · · 28
FIG. 15 OPERATION UNIT · 30
FIG. 16 ACCESSORIES & OPTION · · · · · · · · · · · · · · · · · · · 32

• INDEX · 34

NOTE

1.Indicate parts number and machine model when placing an order.

eg.	Parts Number	Parts Name	Machine Model	Cycle	Quantity
	2A104012	FRONT COVER	KM-1510	60Hz	1
	2A204012	FRONT COVER	KM-1810	60Hz	1

2.Service calls and freight will be charged separately.

3.Symbols in the "Parts Number" column.

- Parts with "◉" indicates the service parts and the parts without "◉" can not be supplied.

- Parts with "•" are component parts or sub-assemblies of the assembly appearing immediately above them.

eg.	Parts Number	Parts Name	Parts Number	Parts Name
	2A168041	LSU ASS'Y	•2A105131	LABEL, LASER UNIT
			•2A113010	UNIT, LSU

- Parts with "• •" are component parts or sub-assembly with "•" appearing immediately above them.

eg.	Parts Number	Parts Name	Parts Number	Parts Name
	•2A201010	MEMORY PCB ASS'Y (KM-1510)	••2A226010	MOUNT, MEMORY BOARD (KM-1510)
			••2A228010	MEMORY PCB (KM-1510)

4.See the last page of this parts list for the classification of the screws in the illustrations.

FIG. 1 EXTERIOR COVERS

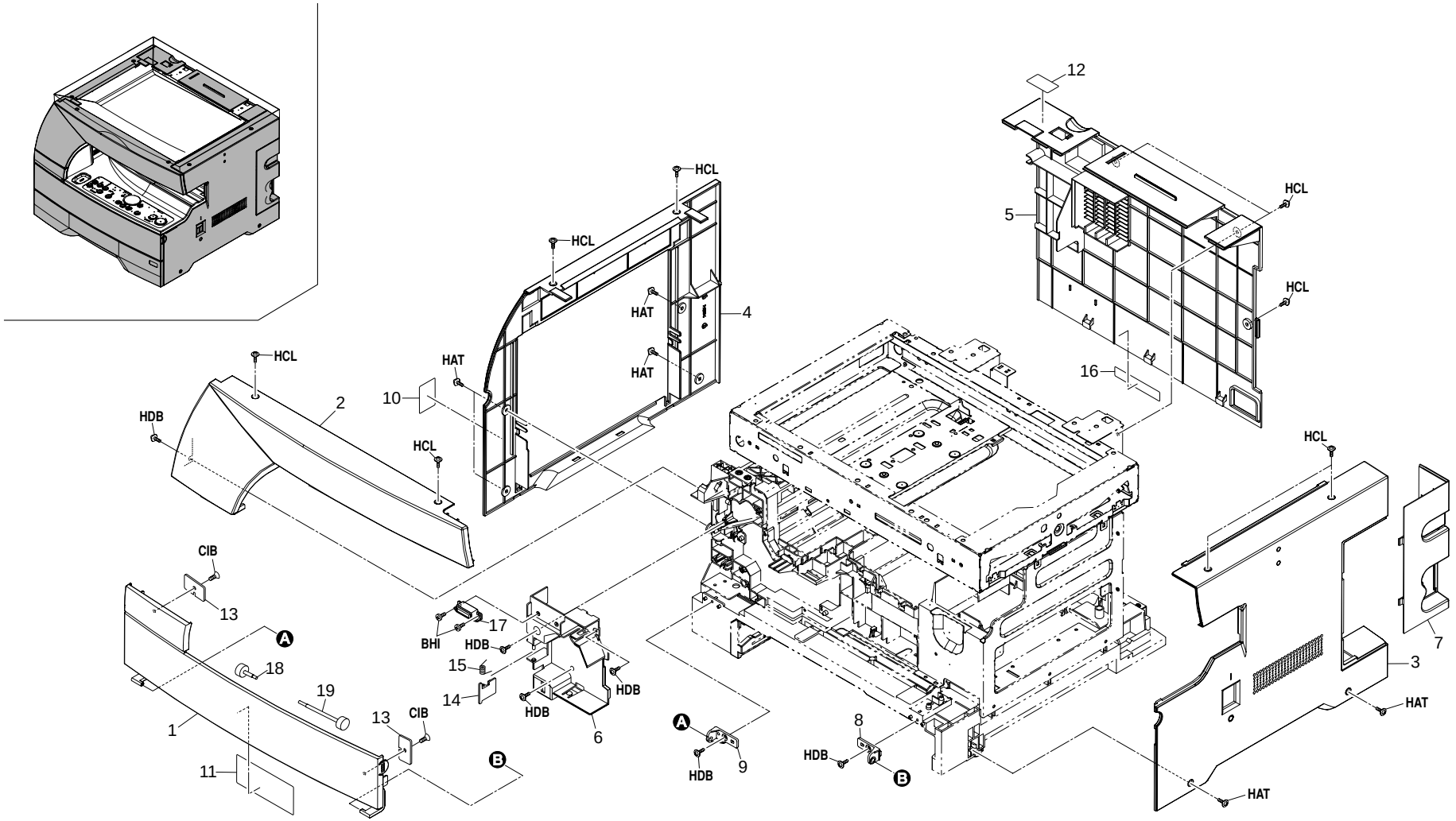

FIG. 1 EXTERIOR COVERS

SP	Ref. No.	Part. No.	Description	Quantity		
				120V	230V	240V
◉	1	2A104012	FRONT COVER (KM-1510)	1	1	1
◉	1	2A204012	FRONT COVER (KM-1810)	1	1	1
◉	2	2A104021	UPPER FRONT COVER	1	1	1
◉	3	2A104032	RIGHT COVER	1	1	1
◉	4	2A104041	LEFT COVER	1	1	1
◉	5	2A104071	REAR COVER (KM-1510)	1	1	1
◉	5	2A204021	REAR COVER (KM-1810)	1	1	1
◉	6	2A104080	COVER,DISPOSAL TANK	1	1	1
◉	7	2A104090	COVER,PRINTER BOARD	1	1	1
◉	8	2A104100	RIGHT FULCRUM PLATE,FRONT COVER	1	1	1
◉	9	2A104110	LEFT FULCRUM PLATE,FRONT COVER	1	1	1
◉	10	2A105091	LABEL,CONVEYING JAM	1	1	1
◉	11	2A105140	LABEL,CARTRIDGE OPERATION	1	1	1
◉	12	2A105160	LABEL,DF CAUTION (KM-1510)	1	1	1
	13	49628105	RECEIVER,MAGNET	2	2	2
	14	2A118240	DETECTION PLATE,DISPOSAL TANK	1	1	1
	15	2A118250	SPRING,TANK DETECTION	1	1	1
	16	2A005060	LABEL,HIGH VOLTAGE CAUTION(EUR)	1	1	1
	17	71804400	MAGNET,LOWER FRONT COVER	1	1	1
	18	19512210	RETAINING PIN,MIRROR FRAME	1	1	1
	19	2A112700	RETAINING PIN A,MIRROR FRAME	1	1	1

- Parts with "•" are component parts or sub-assemblies of the assembly appearing immediately above them.
- Parts with "◉" indicates the Service parts.

- Parts with "• •" are component parts or sub-assembly with "•" appearing immediately above them.

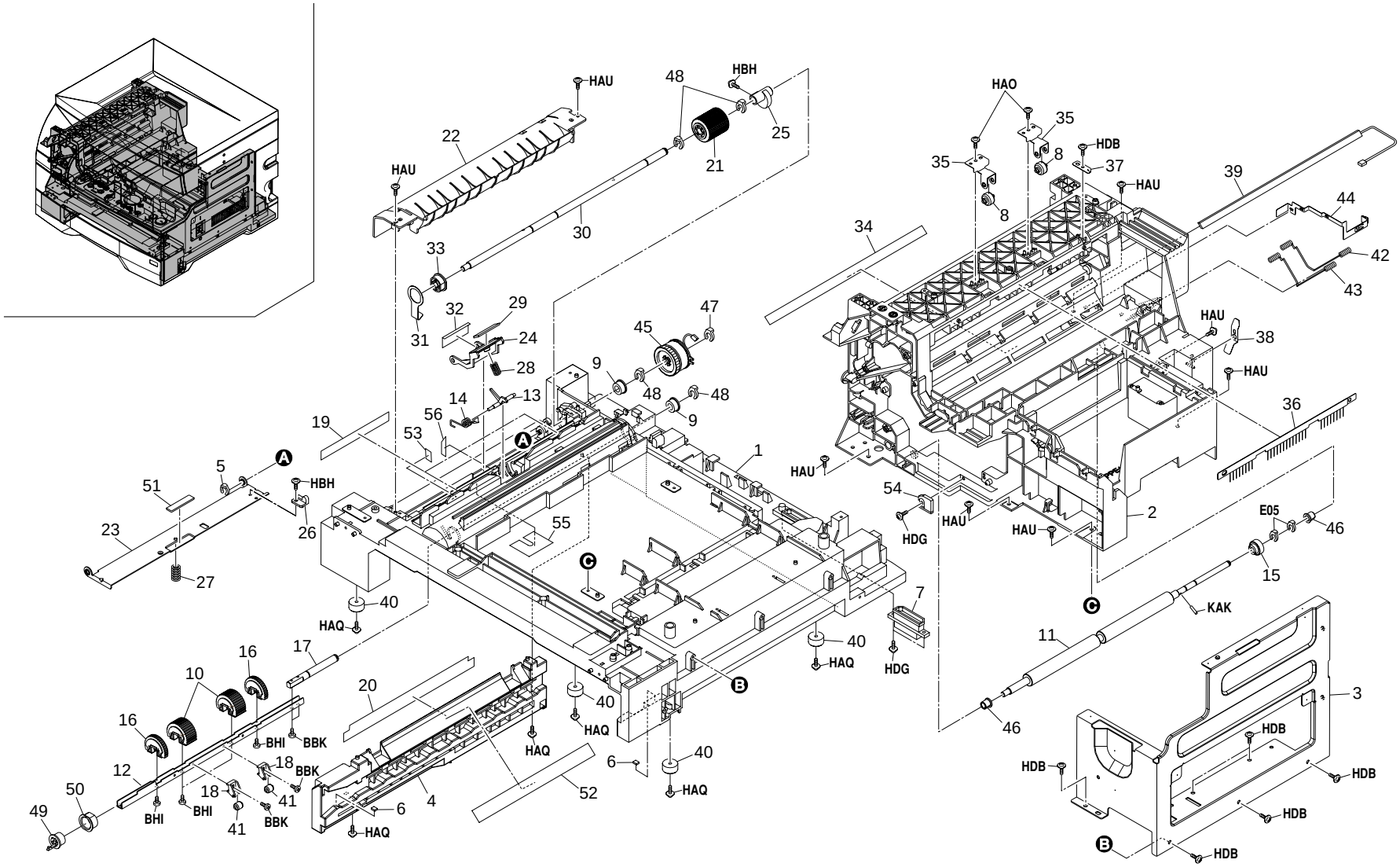
HAU
HBH
HAO
HDB
HBH
HBH
HBH

FIG. 2 FRAMES

2A1/2A2

SP	Ref. No.	Part. No.	Description	Quantity		
				120V	230V	240V
	1	2A102010	BASE	1	1	1
	2	2A102021	FRAME IMAGE FORMATION	1	1	1
	3	2A102030	RIGHT FRAME	1	1	1
	4	2A102090	LEFT RAIL,CASSETTE	1	1	1
	5	2A806250	RING STOPPER	1	1	1
◉	6	2A107040	SLIDER,CASSETTE	2	2	2
	7	J7330120	PLUG,9715B-12A(IRS)	1	1	1
◉	8	68720160	PULLEY,FEED SHIFT	2	2	2
◉	9	67322230	BUSHING 8	2	2	2
◉	10	2A106010	PULLEY,PAPER FEED	2	2	2
◉	11	2A106031	RIGHT ROLLER,REGISTRATION	1	1	1
	12	2A106040	SHAFT,PAPER FEED	1	1	1
◉	13	2A106071	ACTUATOR,REGISTRATION	1	1	1
◉	14	2A106081	SPRING,REGISTRATION ACTUATOR	1	1	1
◉	15	2A106160	RIGHT GEAR 15,REGISTRATION	1	1	1
◉	16	2A106170	PULLEY B,PAPER FEED	2	2	2
	17	2A106180	SHAFT,PAPER FEED CL	1	1	1
	18	2A106191	SUPPORT PLATE,GUIDE PULLEY	2	2	2
◉	19	2A106200	RIGHT GUIDE FILM,REGISTRATION ADMISSION	2	2	2
◉	20	2A106220	GUIDE FILM,PAPER FEED CONFLUENCE	1	1	1
◉	21	2A106510	PULLEY,BYPASS	1	1	1
◉	22	2A106530	UPPER GUIDE,BYPASS	1	1	1
	23	2A106540	GUIDE,BYPASS LIFT	1	1	1
◉	24	2A106550	HOLDER,BYPASS PAD	1	1	1
◉	25	2A106560	CAM,BYPASS LIFT	1	1	1
◉	26	2A106570	STOPPER,BYPASS LIFT	1	1	1
◉	27	2A106581	SPRING,BYPASS LIFT	1	1	1
◉	28	2A106590	SPRING,BYPASS PAD	1	1	1
◉	29	2A106680	PAD,BYPASS	1	1	1
	30	2A106690	SHAFT,BYPASS	1	1	1
	31	2A106700	GROUND PLATE,BYPASS LIFT	1	1	1
◉	32	2A106721	GUIDE,BYPASS PAD	1	1	1
◉	33	2A106730	FRONT BUSHING,BYPASS	1	1	1
	34	2A110150	LIGHT SHIELD,CLEANING LAMP	1	1	1
	35	2A121020	PLATE SPRING,EJECT	2	2	2
◉	36	2A121050	STATIC ELIMINATOR,EJECT	1	1	1
	37	2A121060	GROUND PLATE,EJECT	1	1	1
	38	2A126090	GROUND PLATE,IMAGE FORMATION	1	1	1
◉	39	2A127010	LAMP,CLEANING	1	1	1
	40	65902670	CUSHION RUBBER	4	4	4
	41	34907290	PULLEY,GUIDE	2	2	2
	42	2A127890	TERMINAL,MAIN CHARGER JUNCTION	1	1	1
	43	2A127900	TERMINAL,GRID JUNCTION	1	1	1
	44	2A127910	TERMINAL,TRANSFER JUNCTION	1	1	1
◉	45	2AV27340	CLUTCH,BYPASS	1	1	1
	46	2A806030	BUSH FEED	2	2	2
	47	34806150	STOPPER 5	1	1	1
	48	34806480	STOPPER 6	4	4	4
◉	49	34906150	INNER BUSHING,PAPER FEED	1	1	1
◉	50	34906160	OUTER BUSHING,PAPER FEED	1	1	1
◉	51	2A106760	FRICTION PLATE C,BYPASS LIFT	1	1	1
◉	52	2A106230	GUIDE FILM,PRIMARY PAPER FEED	1	1	1
	53	2A106740	VIBRATION INSULATOR,PAD HOLDER	1	1	1
	54	2A114340	HOLDER,DEVELOPING	1	1	1
◉	55	2A106240	FRONT SHEET,REGISTRATION	1	1	1
	56	2A106770	SHEET,PAD HOLDER	1	1	1

• Parts with "•" are component parts or sub-assemblies of the assembly appearing immediately above them.
• Parts with "◉" indicates the Service parts.

• Parts with "• •" are component parts or sub-assembly with "•" appearing immediately above them.

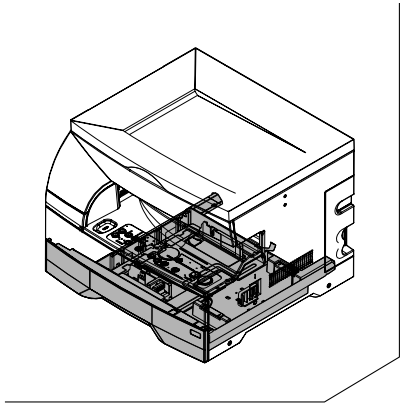

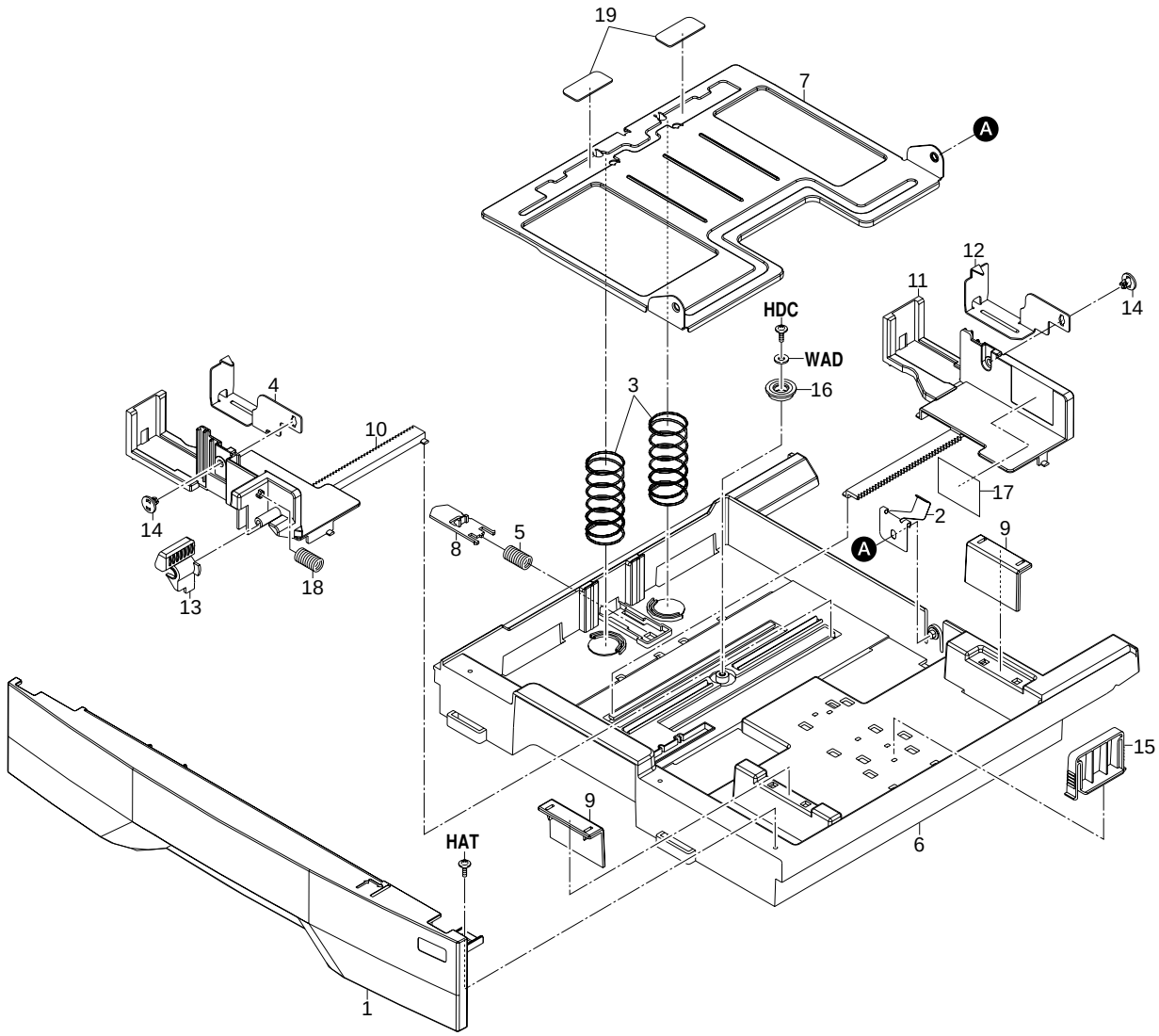
19
7
A
12
11
14
HDC
WAD
16
3
4
10
17
2
9
14
8
5
A
18
13
15
9
HAT
6
1

FIG. 3 CASSETTE

SP	Ref. No.	Part. No.	Description	Quantity		
				120V	230V	240V
◉	1	2A107011	COVER,CASSETTE	1	1	1
	2	2A107020	GROUND PLATE,CASSETTE	1	1	1
	3	2A107030	SPRING,CASSETTE	2	2	2
◉	4	2A107050	FRONT CLAW CASSETTE	1	1	1
	5	76508130	SPRING BELT GUIDE ROLLER	1	1	1
	6	19507011	CASSETTE,PAPER FEED	1	1	1
	7	19507040	BASE,CASSETTE	1	1	1
	8	19507050	LEVER,CASSETTE BASE RELEASE	1	1	1
	9	19507080	REAR STOPPER,PAPER(METRIC)		2	2
◉	10	34907021	FRONT CURSOR,CASSETTE	1	1	1
◉	11	34907031	REAR CURSOR,CASSETTE	1	1	1
◉	12	34907050	REAR CLAW,CASSETTE	1	1	1
	13	34907060	LEVER,CURSOR RETAINING	1	1	1
	14	34907070	PIN,CLAW CASSETTE	2	2	2
◉	15	34907131	REAR STOPPER,PAPER	1	1	1
	16	34907141	GEAR 18,CASSETTE	1	1	1
	17	34907330	LABEL,PAPER UPPER LIMIT	1	1	1
	18	68802070	SPRING A,LIFT UP	1	1	1
◉	19	2A107060	FRICTION PLATE,CASSETTE	2	2	2

• Parts with "•" are component parts or sub-assemblies of the assembly appearing immediately above them.
• Parts with "◉" indicates the Service parts.

• Parts with "• •" are component parts or sub-assembly with "•" appearing immediately above them.

FIG. 4 CONVEYING SECTION

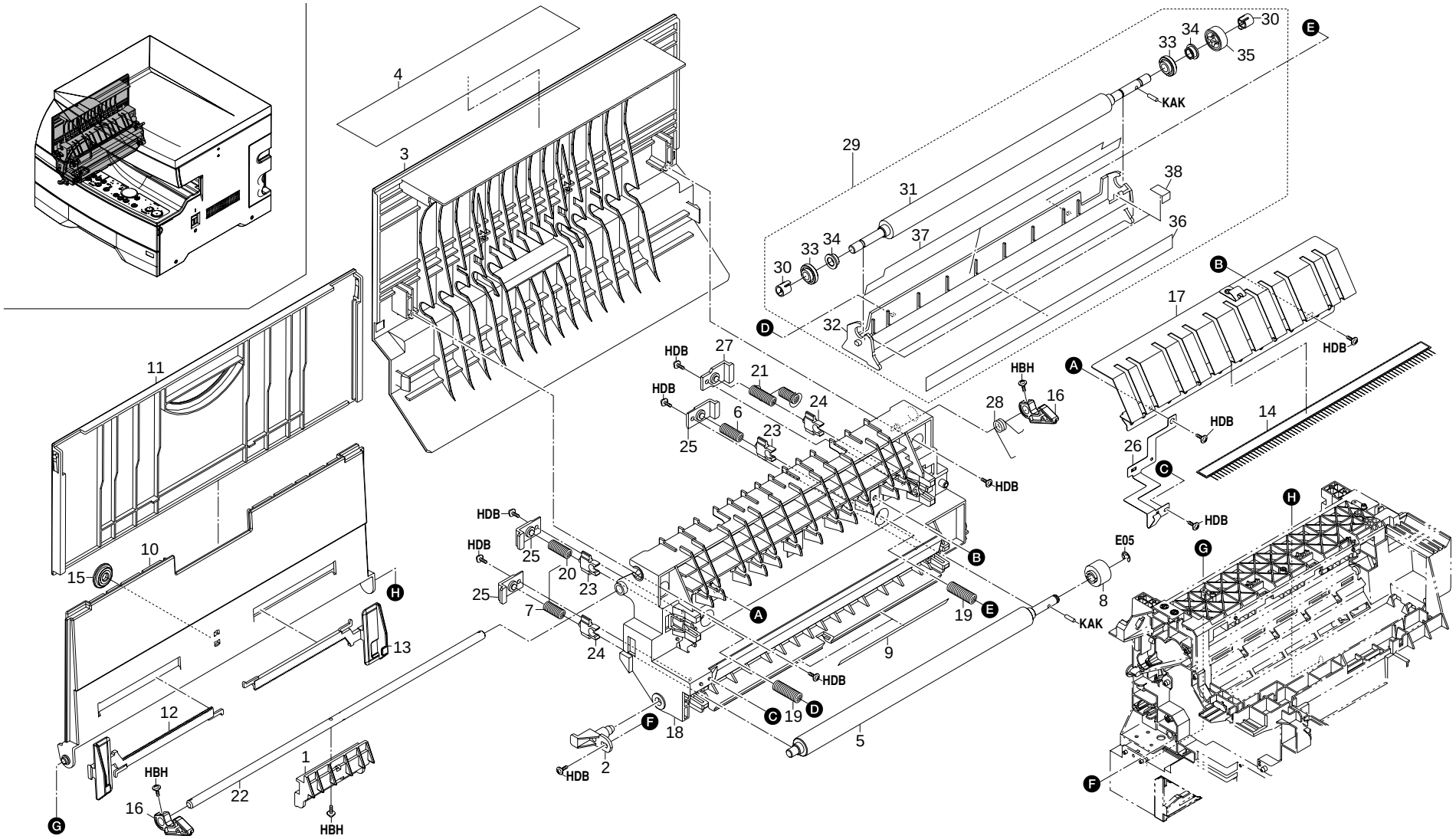

FIG. 4 CONVEYING SECTION

SP	Ref. No.	Part. No.	Description	Quantity		
				120V	230V	240V
◉	1	2A102100	HANDLE,JAM RELEASE	1	1	1
	2	2A102110	FULCRUM PIN,CONVEYING	1	1	1
◉	3	2A104052	COVER,CONVEYING	1	1	1
◉	4	2A105080	LABEL,HIGH TEMPERATURE CAUTION	1	1	1
◉	5	2A106020	LEFT ROLLER,REGISTRATION	1	1	1
	6	2A106060	SPRING,REGISTRATION PRESSING	1	1	1
	7	2A106120	FRONT SPRING,REGISTRATION PRESSING	1	1	1
◉	8	2A106150	LEFT GEAR 14,REGISTRATION	1	1	1
◉	9	2A106210	LEFT GUIDE FILM,REGISTRATION ADMISSION	2	2	2
◉	10	2A106810	TABLE,BYPASS	1	1	1
◉	11	2A106820	COVER,BYPASS TABLE	1	1	1
	12	2A106831	FRONT CURSOR,BYPASS	1	1	1
	13	2A106841	REAR CURSOR,BYPASS	1	1	1
◉	14	2A116171	STATIC ELIMINATOR,TRANSFER	1	1	1
◉	15	2A806720	GEAR MPF	1	1	1
	16	35904270	HOOK,CONVEYING HANDLE	2	2	2
	17	2A116050	REAR GUIDE TRANSFER	1	1	1
	18	2A116060	HOUSING,CONVEYING	1	1	1
	19	2A116070	SPRING,CONVEYING PRESSURE	2	2	2
	20	2A116080	FRONT SPRING,TRANSFER ROLLER	1	1	1
	21	2A116090	REAR SPRING,TRANSFER ROLLER	1	1	1
	22	2A116100	SHAFT,HOOK	1	1	1
◉	23	2A116111	FRONT BUSHING,TRANSFER PRESSURE	2	2	2
◉	24	2A116121	REAR BUSHING,TRANSFER PRESSURE	2	2	2
	25	2A116130	HOLDER,PRESSURE SPRING	3	3	3
	26	2A116140	TERMINAL,TRANSFER GUIDE	1	1	1
	27	2A116150	HOLDER,TRANSFER PRESSURE SPRING	1	1	1
	28	2A116160	SPRING,CONVEYING RELEASE	1	1	1
◉	29	2A168034	TRANSFER ROLLER ASS'Y	1		
◉	29	2A168064	TRANSFER ROLLER ASS'Y(METRIC)		1	1
	30	•2AR17080	COLLAR,TRANSFER ROLLER	2	2	2
◉	31	•2A116010	ROLLER,TRANSFER	1		
◉	31	•2A116200	ROLLER,TRANSFER,METRIC		1	1
	32	•2A116020	FRONT GUIDE,TRANSFER	1	1	1
◉	33	•2A116040	PULLEY,TRANSFER	2	2	2
◉	34	•2A116180	BUSHING,TRANSFER	2	2	2
◉	35	•2A116190	GEAR,TRANSFER	1	1	1
◉	36	•2A116210	FRONT SHEET,TRANSFER GUIDE	1	1	1
◉	37	•2A116220	CLEANER,TRANSFER	1	1	1
◉	38	•2A116240	SEAL B,TRANSFER ROLLER	2	2	2

• Parts with "•" are component parts or sub-assemblies of the assembly appearing immediately above them.
• Parts with "◉" indicates the Service parts.

• Parts with "• •" are component parts or sub-assembly with "•" appearing immediately above them.

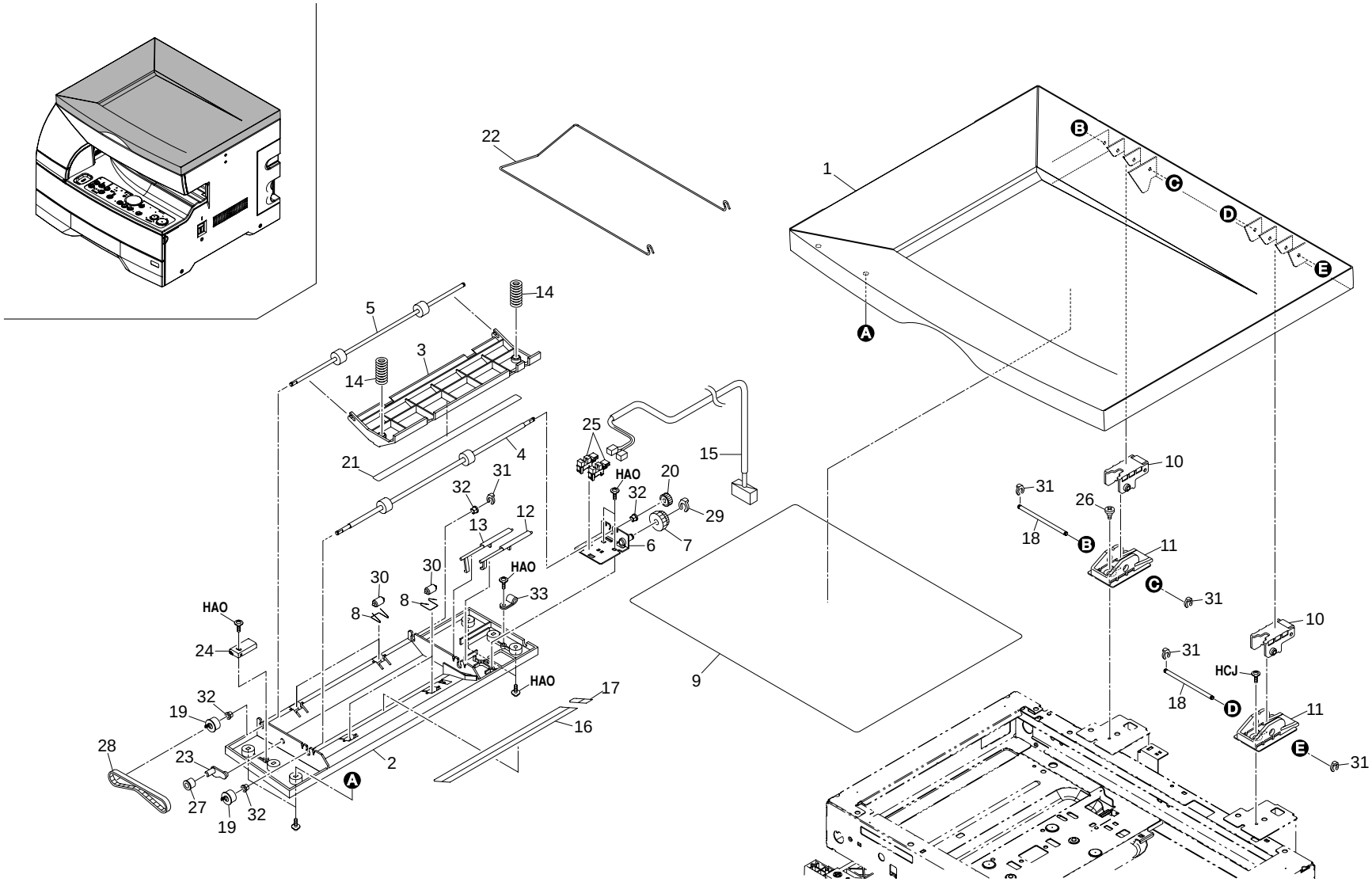
1
2
3
4
5
6
7
8
9
10
11
12
13
14
15
16
17
18
19
20
21
22
23
24
25
26
27
28
29
30
31
32
33
HAO
HCJ
A
B
C
D
E

FIG. 5 DOCUMENT FEEDER (KM-1510)

SP	Ref. No.	Part. No.	Description	Quantity		
				120V	230V	240V
◉	1	3BP11070	COVER,ADF	1	1	1
◉	2	3BP11080	HOUSING,CONVEYING	1	1	1
◉	3	3BP11090	GUIDE,ORIGINAL	1	1	1
◉	4	3BP11100	ROLLER,CONVEYING	1	1	1
◉	5	3BP11110	ROLLER,EJECT	1	1	1
	6	3BP11120	MOUNT,DRIVE	1	1	1
◉	7	3BP11130	GEAR 25/19	1	1	1
◉	8	3BP11140	SPRING,CONVEYING	4	4	4
◉	9	3BP11150	MAT,ORIGINAL HOLDER	1	1	1
◉	10	3BP11160	UPPER HINGE	2	2	2
◉	11	3BP11170	LOWER HINGE	2	2	2
◉	12	3BP11180	ACTUATOR,ORIGINAL DETECTION	1	1	1
◉	13	3BP11190	ACTUATOR,TIMING DETECTION	1	1	1
◉	14	3BP11220	SPRING,ORIGINAL GUIDE	2	2	2
	15	3BP11230	WIRE,ADF	1	1	1
◉	16	3BP11240	FRONT FILM,CONVEYING	1	1	1
◉	17	3BP11250	REAR FILM,CONVEYING	1	1	1
	18	3BP11270	SHAFT,HINGE	2	2	2
◉	19	3BP11280	PULLEY 22,CONVEYING	2	2	2
◉	20	3BP11290	GEAR 20,CONVEYING	1	1	1
◉	21	3BP11300	SHEET,READING	1	1	1
	22	3BP11310	TRAY,EJECT	1	1	1
◉	23	3BP11320	MOUNT,PULLEY	1	1	1
	24	3BP11330	RETAINER,TENSION	1	1	1
◉	25	2A127050	SWITCH,PHOT0 INTERRUPTOR	2	2	2
	26	48129208	PIN,TENSION	1	1	1
◉	27	3A722090	PULLEY,DRIVE	1	1	1
◉	28	3BR22040	BELT 192,CONVEYING	1	1	1
	29	34806140	STOPPER 4	1	1	1
◉	30	34917170	PULLEY,TRANSFER HOLDER	4	4	4
	31	65016080	STOP RING E3	5	5	5
◉	32	66006840	BUSHING 4	4	4	4
	33	M2105020	NYLON CLAMP 4N,NK-4N	1	1	1

- Parts with "•" are component parts or sub-assemblies of the assembly appearing immediately above them.
- Parts with "◉" indicates the Service parts.

- Parts with "• •" are component parts or sub-assembly with "•" appearing immediately above them.

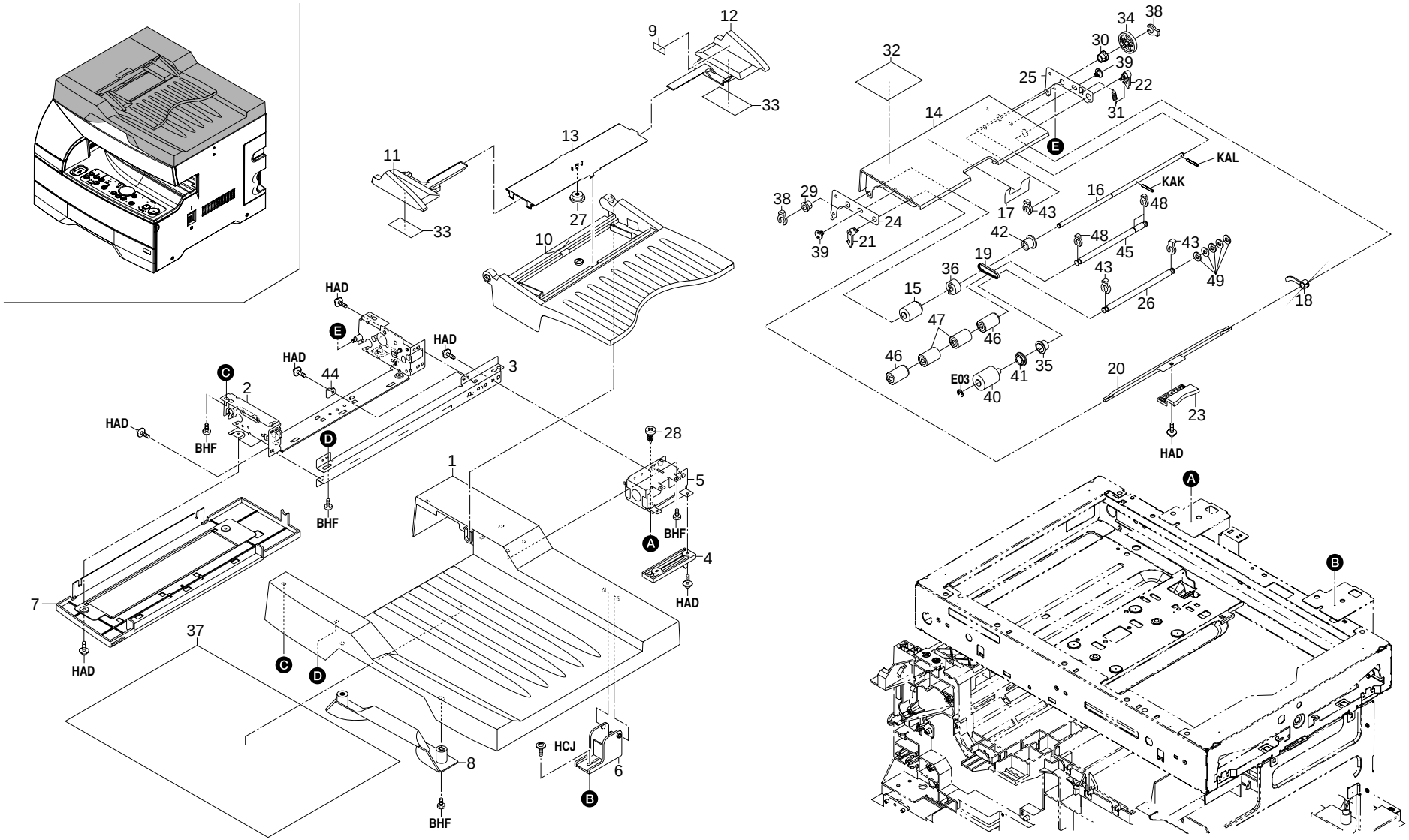
HAD
BHF
HCJ
KAL
KAK
E03

FIG. 6 AUTO DOCUMENT FEEDER I (KM-1810)

SP	Ref. No.	Part. No.	Description	Quantity		
				120V	230V	240V
◉	1	3BR02010	BASE,ADF	1	1	1
	2	3BR02020	FRAME,ADF	1	1	1
	3	3BR02030	STAY,ADF	1	1	1
	4	3BR02060	LEVER,RELEASE SWITCH	1	1	1
	5	3BR03010	LEFT HINGE	1	1	1
	6	3BR03040	RIGHT HINGE	1	1	1
◉	7	3BR04010	LOWER COVER,CONVEYING	1	1	1
◉	8	3BR04020	HANDLE,ADF	1	1	1
	9	3BR05010	LABEL,ORIGINAL UPPER LIMIT	1	1	1
◉	10	3BR06010	TABLE,ADF	1	1	1
◉	11	3BR06020	FRONT CURSOR	1	1	1
◉	12	3BR06030	REAR CURSOR	1	1	1
◉	13	3BR06040	COVER,TABLE	1	1	1
◉	14	3BR07010	COVER,PAPER FEED	1	1	1
◉	15	3BR07040	PULLEY,PAPER FEED	1	1	1
◉	16	3BR07070	SHAFT,PAPER FEED	1	1	1
	17	3BR07260	UPPER FILM,CONVEYING	1	1	1
◉	18	3BR07110	ACTUATOR,ORIGINAL DETECTION	1	1	1
◉	19	3BR07130	BELT 114,PAPER FEED	1	1	1
	20	3BR07140	MOUNT,HANDLE	1	1	1
	21	3BR07150	FRONT HOOK,PAPER FEED COVER	1	1	1
	22	3BR07160	REAR HOOK,PAPER FEED COVER	1	1	1
◉	23	3BR07170	HANDLE,PAPER FEED COVER	1	1	1
	24	3BR07220	FRONT SUPPORT PLATE,PAPER FEED COVER	1	1	1
	25	3BR07230	REAR SUPPORT PLATE,PAPER FEED COVER	1	1	1
	26	3A707060	SHAFT,LEADING FEED	1	1	1
	27	2A807050	GEAR CASSETTE	1	1	1
	28	48128609	PIN,UPPER FRONT COVER	1	1	1
◉	29	29806560	BUSHING 6	1	1	1
◉	30	29806810	BUSHING,6 REGISTRATION	1	1	1
	31	29822280	SPRING,PF COUPLER	1	1	1
◉	32	3AL05120	LABEL,DF ORIGINAL CAUTION	1	1	1
	33	3AL06090	CUSHION,ORIGINAL GUIDE	2	2	2
	34	3A707110	GEAR 30,PAPER FEED	1	1	1
◉	35	3A707120	PULLEY,LEADING FEED	1	1	1
◉	36	3BC07130	ONE-WAY CLUTCH 6	1	1	1
◉	37	3BP11150	MAT,ORIGINAL HOLDER	1	1	1
	38	34806150	STOPPER 5	2	2	2
	39	34907070	PIN,CLAW CASSETTE	2	2	2
◉	40	3A707030	PULLEY,LEADING FEED	1	1	1
	41	36211500	GEAR,LEADING FEED JOINT	1	1	1
	42	68721640	PULLEY 20,DUPLEX CONVEYING	1	1	1
	43	78620710	CLAW STOPPER	3	3	3
	44	M2105010	NYLON CLAMP 3N,NK-3N	1	1	1
	45	3BR07290	SHAFT,LEADING FEED	1	1	1
	46	29806710	PULLEY,RELEASE LEVER	2	2	2
	47	3AL08170	PULLEY,EJECT	2	2	2
	48	65016080	STOP RING E3	3	3	3
	49	C2804100	POLYESTER SLIDER WASHER 4.1X10X0.5T	5	5	5

• Parts with "•" are component parts or sub-assemblies of the assembly appearing immediately above them.
• Parts with "◉" indicates the Service parts.

• Parts with "• •" are component parts or sub-assembly with "•" appearing immediately above them.

FIG. 7 AUTO DOCUMENT FEEDER II (KM-1810)

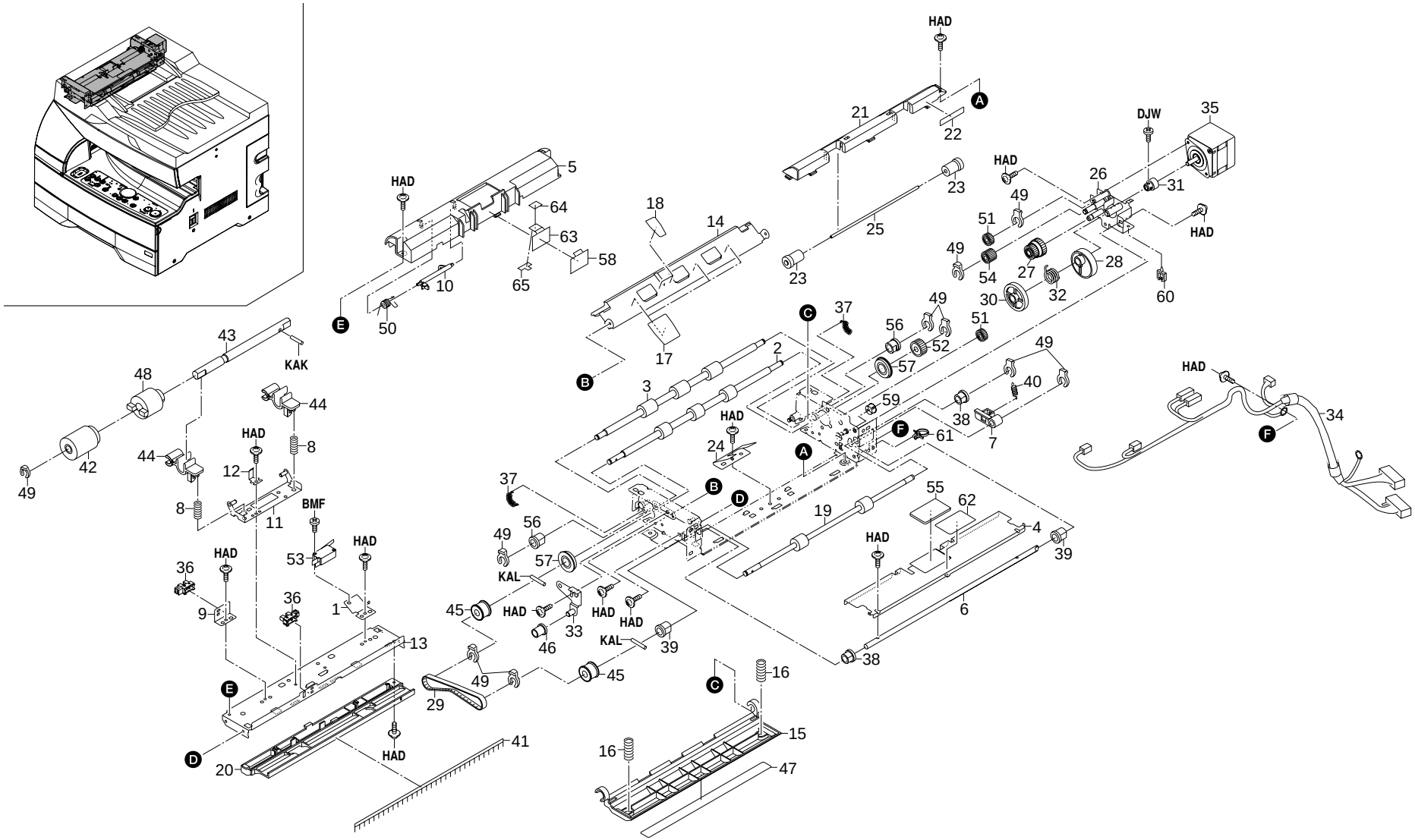

FIG. 7 AUTO DOCUMENT FEEDER II (KM-1810)

SP	Ref. No.	Part. No.	Description	Quantity		
				120V	230V	240V
	1	3BR02080	MOUNT,RELEASE SWITCH	1	1	1
◉	2	3BR07020	UPPER ROLLER,REGISTRATION	1	1	1
◉	3	3BR07030	LOWER ROLLER,REGISTRATION	1	1	1
	4	3BR07050	GUIDE,LIFT	1	1	1
	5	3BR07060	GUIDE,PAPER FEED	1	1	1
	6	3BR07080	SHAFT,LIFT	1	1	1
	7	3BR07120	LEVER,LIFT	1	1	1
	8	3BR07180	SPRING,SEPARATION PULLEY	2	2	2
	9	3BR07190	MOUNT,TIMING SWITCH	1	1	1
◉	10	3BR07200	ACTUATOR,TIMING SWITCH	1	1	1
	11	3BR07210	MOUNT,SEPARATION PULLEY	1	1	1
	12	3BR07240	GROUND PLATE,SEPARATION PULLEY	1	1	1
	13	3BR08010	STAY,CONVEYING	1	1	1
	14	3BR08020	GUIDE,CONVEYING	1	1	1
	15	3BR08030	GUIDE,READING	1	1	1
	16	3BR08040	SPRING,READING	2	2	2
	17	3BR08050	FILM A,CONVEYING	3	3	3
	18	3BR08060	FILM B,CONVEYING	2	2	2
◉	19	3BR10010	UPPER ROLLER,EJECT	1	1	1
	20	3BR10030	UPPER GUIDE,EJECT	1	1	1
	21	3BR10040	LOWER GUIDE,EJECT	1	1	1
	22	3BR10050	FILM,EJECT	1	1	1
	23	3BR10060	PULLEY,FEED	2	2	2
	24	3BR10070	PLATE SPRING,EJECT PULLEY	1	1	1
	25	3BR10080	SHAFT,EJECT PULLEY	1	1	1
	26	3BR22010	MOUNT,ADF MOTOR	1	1	1
	27	3BR22020	GEAR 42/20,PAPER FEED	1	1	1
	28	3BR22030	CAM,LIFT	1	1	1
◉	29	3BR22040	BELT 192,CONVEYING	1	1	1
	30	3BR22060	GEAR 38,LIFT	1	1	1
	31	3BR22070	GEAR,DRIVE ADF	1	1	1
◉	32	3BR22080	SQUARE SPRING,CAM	1	1	1
	33	3BR22090	TENSION PLATE B,DRIVE	1	1	1
	34	3BR27010	WIRE,ADF	1	1	1
◉	35	3BR27020	MOTOR,ADF	1	1	1
◉	36	2A127050	SWITCH,PHOTO INTERRUPTOR	2	2	2
	37	28107301	PRESSING SPRING	2	2	2
◉	38	29806560	BUSHING 6	2	2	2
◉	39	29806810	BUSHING,6 REGISTRATION	2	2	2
	40	3BR07360	SPRING,LIFT	1	1	1
◉	41	3AL07250	REAR STATIC ELIMINATOR,PAPER FEED	1	1	1
	42	3A707020	PULLEY,PAPER FEED	1	1	1
	43	3A707070	SHAFT,SEPARATION	1	1	1
	44	3A707090	HOLDER,SEPARATION PULLEY	2	2	2
	45	3A722040	PULLEY 24,CONVEYING	2	2	2
	46	3A722090	PULLEY,DRIVE	1	1	1
◉	47	3BP11300	SHEET,READING	1	1	1
◉	48	33906070	TORQUE LIMITER,PAPER FEED	1	1	1
	49	34806150	STOPPER 5	10	10	10
	50	35320300	SPRING,EJECT ACTUATOR	1	1	1
	51	35322020	GEAR 20,PAPER FEED DRIVE	2	2	2
◉	52	35911790	GEAR 20,PAPER FEED PULLEY	1	1	1
◉	53	63527020	SAFETY,SWITCH	1	1	1
	54	65011310	GEAR 20,IDLE	1	1	1
◉	55	3BR07270	PAD,LIFT	1	1	1
◉	56	72107160	BUSHING 6,LOWER REGISTRATION ROLLER	2	2	2
	57	74808080	BEARING,686ZZNR	2	2	2
	58	3BR07350	FRONT FILM,PAD SEPARATION	1	1	1
	59	M1203200	OPEN BUSHING,OCB-375	1	1	1
	60	M2105720	MINIATURE CLAMP,UAMS-05-2	1	1	1
	61	M2107120	BINDING BAND SG-130	1	1	1
	62	3BR07280	FILM,LIFT	1	1	1
	63	3BR07310	FRONT PLATE SPRING,SEPARATION	1	1	1
	64	3BR07320	FRONT PAD,SEPARATION	1	1	1
	65	3BR07330	FRONT FILM,SEPARATION	1	1	1

• Parts with "•" are component parts or sub-assemblies of the assembly appearing immediately above them.
• Parts with "◉" indicates the Service parts.

• Parts with "• •" are component parts or sub-assembly with "•" appearing immediately above them.

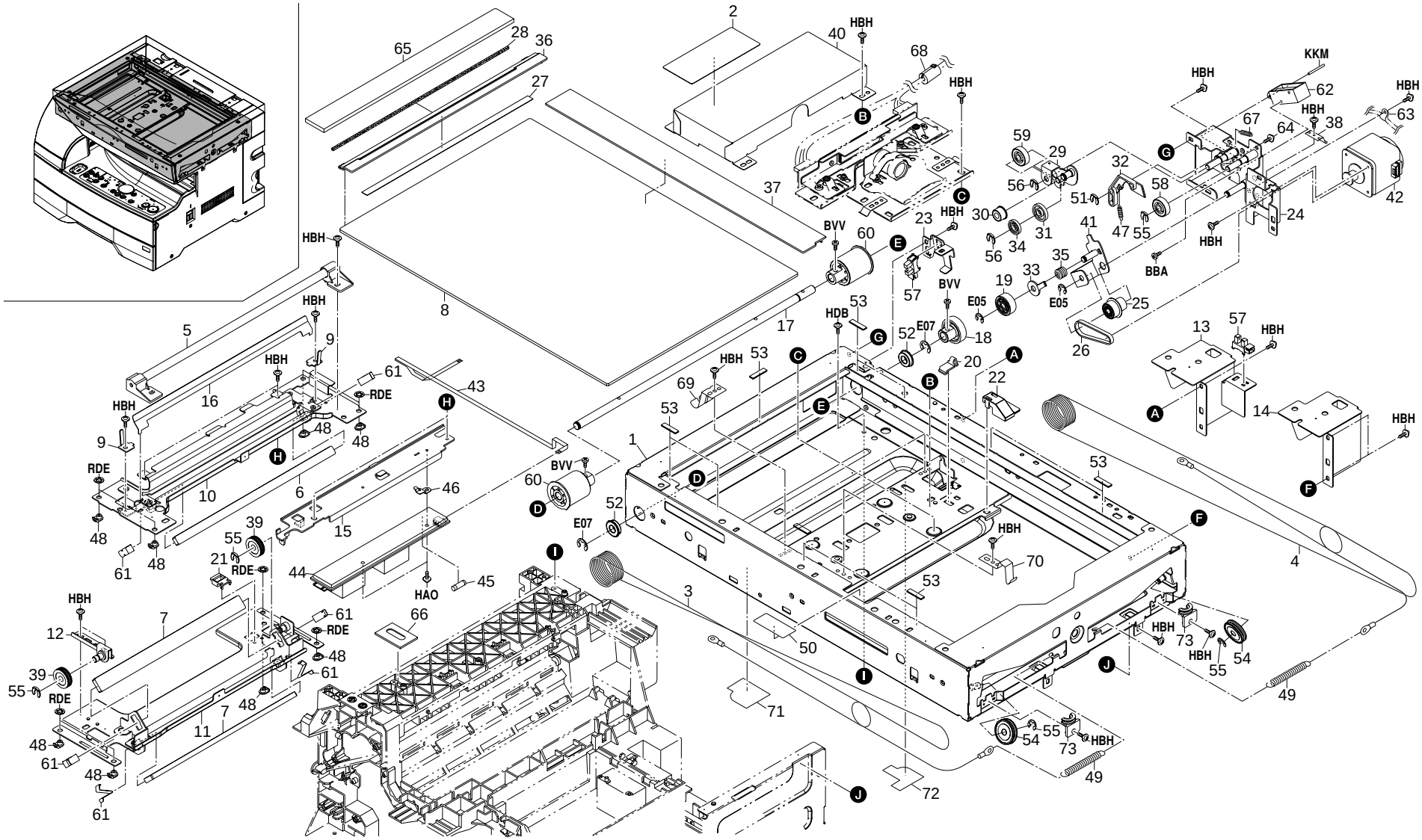
1
2
3
4
5
6
7
8
9
10
11
12
13
14
15
16
17
18
19
20
21
22
23
24
25
26
27
28
29
30
31
32
33
34
35
36
37
38
39
40
41
42
43
44
45
46
47
48
49
50
51
52
53
54
55
56
57
58
59
60
61
62
63
64
65
66
67
68
69
70
71
72
73
A
B
C
D
E
F
G
H
I
J
HBH
BVV
HDB
E05
E07
RDE
HAO
BBA
KKM

FIG. 8 OPTICAL SECTION

2A1/2A2

SP	Ref. No.	Part. No.	Description	Quantity		
				120V	230V	240V
	1	2A100010	SCANNER FRAME ASS'Y	1	1	1
	2	2A105180	LABEL,CAUTION CONTACT GLASS	1	1	1
◉	3	2A112080	FRONT WIRE,SCANNER	1	1	1
◉	4	2A112090	REAR WIRE,SCANNER	1	1	1
◉	5	2A193030	PARTS,LAMP SCANNER(SP)	1	1	1
◉	6	2A112111	MIRROR A	1	1	1
◉	7	2A112120	MIRROR B	2	2	2
◉	8	2A112160	CONTACT GLASS	1	1	1
	9	2A112170	RETAINER,WIRE	2	2	2
	10	2A112180	MIRROR FRAME A	1	1	1
	11	2A112190	MIRROR FRAME B	1	1	1
	12	2A112200	ADJUSTING PLATE B,MIRROR FRAME	1	1	1
	13	2A112210	LEFT MOUNT,DF HINGE	1	1	1
	14	2A112220	RIGHT MOUNT,DF HINGE	1	1	1
	15	2A112230	COVER,INVERTER	1	1	1
	16	2A112240	REFLECTOR,SCANNER	1	1	1
	17	2A112250	SHAFT,SCANNER DRIVE	1	1	1
◉	18	2A112260	GEAR Z30	1	1	1
◉	19	2A112270	GEAR Z23	1	1	1
	20	2A112280	HOLDER,FFC	1	1	1
	21	2A112290	GUIDE FFC2	1	1	1
	22	2A112300	HOLDER,ISU WIRE	1	1	1
	23	2A112310	MOUNT,SCANNER PI	1	1	1
	24	2A112320	MOUNT,SCANNER MOTOR	1	1	1
◉	25	2A112330	GEAR 27/13,SCANNER DRIVE	1	1	1
◉	26	2A112340	BELT S2M60,SCANNER	1	1	1
	27	2A112350	STANDARD PLATE,SHADING	1	1	1
◉	28	2A112360	SPONGE,ORIGINAL SIZE INDICATOR	1	1	1
	29	2A112370	MOUNT,DRIVE SHIFT (KM-1510)	1	1	1
◉	30	2A112380	GEAR 13,DRIVE SHIFT (KM-1510)	1	1	1
◉	31	2A112390	GEAR 25,DRIVE SHIFT (KM-1510)	1	1	1
	32	2A112400	LEVER,DRIVE SHIFT (KM-1510)	1	1	1
◉	33	2A112410	FRICTION PLATE,DRIVE SHIFT	1	1	1
	34	2A112420	COLLAR,JOINT (KM-1510)	1	1	1
	35	2A112430	SPRING,FRICTION PLATE	1	1	1
◉	36	2A112441	LEFT ORIGINAL SIZE INDICATOR,ORIGINAL	1	1	1
◉	37	2A112451	REAR ORIGINAL SIZE INDICATOR,ORIGINAL	1	1	1
	38	2A112470	GROUND PLATE,SCANNER MOTOR	1	1	1
	39	2A112490	PULLEY B,MIRROR FRAME	2	2	2
	40	2A112520	COVER,ISU	1	1	1
	41	2A112530	WORK PLATE,SCANNER DRIVE	1	1	1
◉	42	2A193110	PARTS,MOTOR ISU(SP)	1	1	1
	43	2A127780	WIRE,ISU	1	1	1
◉	44	2A128020	INVERTER PCB	1	1	1
◉	45	•M1651000	FUSE,250V 1,25A MINI 239	1	1	1
	46	2AC12440	GROUND PLATE,INVERTER	1	1	1
	47	2AR22160	SPRING,FIXING TENSION (KM-1510)	1	1	1
◉	48	2AV12450	SLIDER,SCANNER	8	8	8
◉	49	2AV12500	SPRING,SCANNER TENSION	2	2	2
	50	2A112680	FRONT SEAL,SCANNER	1	1	1
	51	2A806250	RING STOPPER (KM-1510)	1	1	1
◉	52	28107400	BEARING,688ZZNR	2	2	2
◉	53	29812291	CUSHION,CONTACT GLASS	9	9	9
	54	33912150	PULLEY,WIRE	2	2	2
	55	34806150	STOPPER 5	5	5	5
	56	34806150	STOPPER 5 (KM-1510)	2	2	2
◉	57	35327400	SWITCH,FEED	2	2	2
◉	58	35411070	GEAR 21,IDLE	1	1	1
◉	59	35411070	GEAR 21,IDLE (KM-1510)	1	1	1
	60	35912060	PULLEY,SCANNER DRUM	2	2	2
	61	35912210	SPRING,MIRROR HOLDER	6	6	6
◉	62	62227070	SOLENOID B,FEED SHIFT (KM-1510)	1	1	1
	63	M2105020	NYLON CLAMP 4N,NK-4N	1	1	1
	64	B4303080	TRIPLE SCREW M3X8(BLACK) (KM-1510)	1	1	1
◉	65	2A112130	CONTACT GLASS,DF	1	1	1
	66	2A112670	SPONGE,SCANNER BASE	1	1	1
	67	2A112640	SPRING,JOINT DRIVE (KM-1510)	1	1	1
	68	65027470	CORE,7-15X18	1	1	1
	69	2A112620	LEFT GROUND PLATE,ISU MOUNT	2	2	2
	70	2A112630	RIGHT GROUND PLATE,ISU MOUNT	1	1	1
◉	71	2A112650	FRONT SEAL,SCANNER BASE	1	1	1
◉	72	2A112660	REAR SEAL,SCANNER BASE	1	1	1
	73	18512340	GUIDE,SCANNER WIRE	2	2	2

• Parts with "•" are component parts or sub-assemblies of the assembly appearing immediately above them.
• Parts with "◉" indicates the Service parts.

• Parts with "• •" are component parts or sub-assembly with "•" appearing immediately above them.

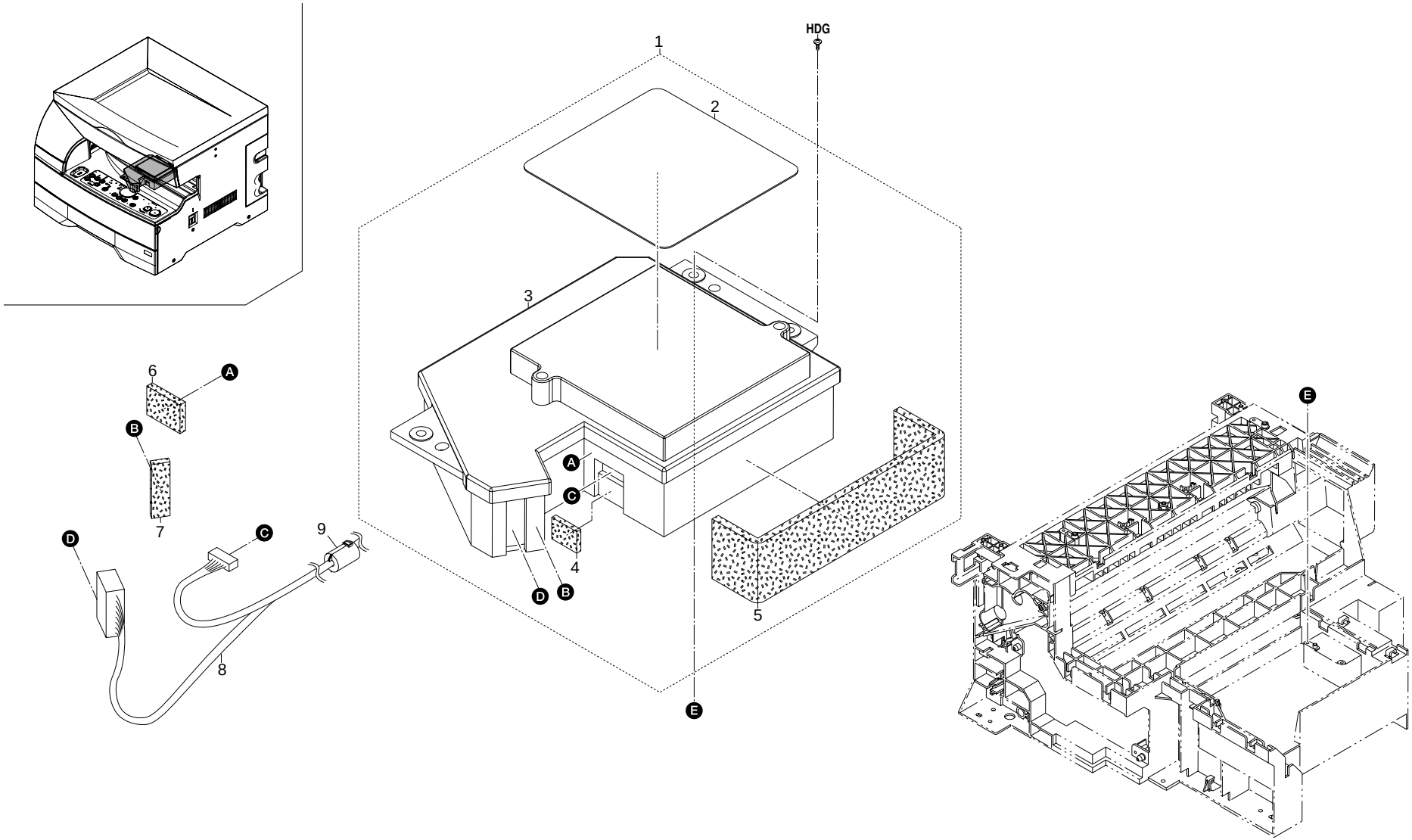
HDG
1
2
3
4
5
6
7
8
9
A
B
C
D
E

FIG. 9 LASER SCANNER UNIT

SP	Ref. No.	Part. No.	Description	Quantity		
				120V	230V	240V
◉	1	2A168041	LSU ASS'Y	1	1	1
◉	2	•2A105131	LABEL,LASER UNIT	1	1	1
	3	•2A113010	UNIT,LSU	1	1	1
◉	4	•2A113020	SPONGE 1,LSU	1	1	1
◉	5	•2A113050	SPONGE 4,LSU	1	1	1
◉	6	2A113030	SPONGE 2,LSU	1	1	1
◉	7	2A113040	SPONGE 3,LSU	1	1	1
	8	2A127860	WIRE,LSU	1	1	1
	9	33927580	CORE 9-20X32	1	1	1

• Parts with "•" are component parts or sub-assemblies of the assembly appearing immediately above them.
• Parts with "◉" indicates the Service parts.

• Parts with "• •" are component parts or sub-assembly with "•" appearing immediately above them.

FIG. 10 IMAGING UNIT (DEVELOPING SECTION)

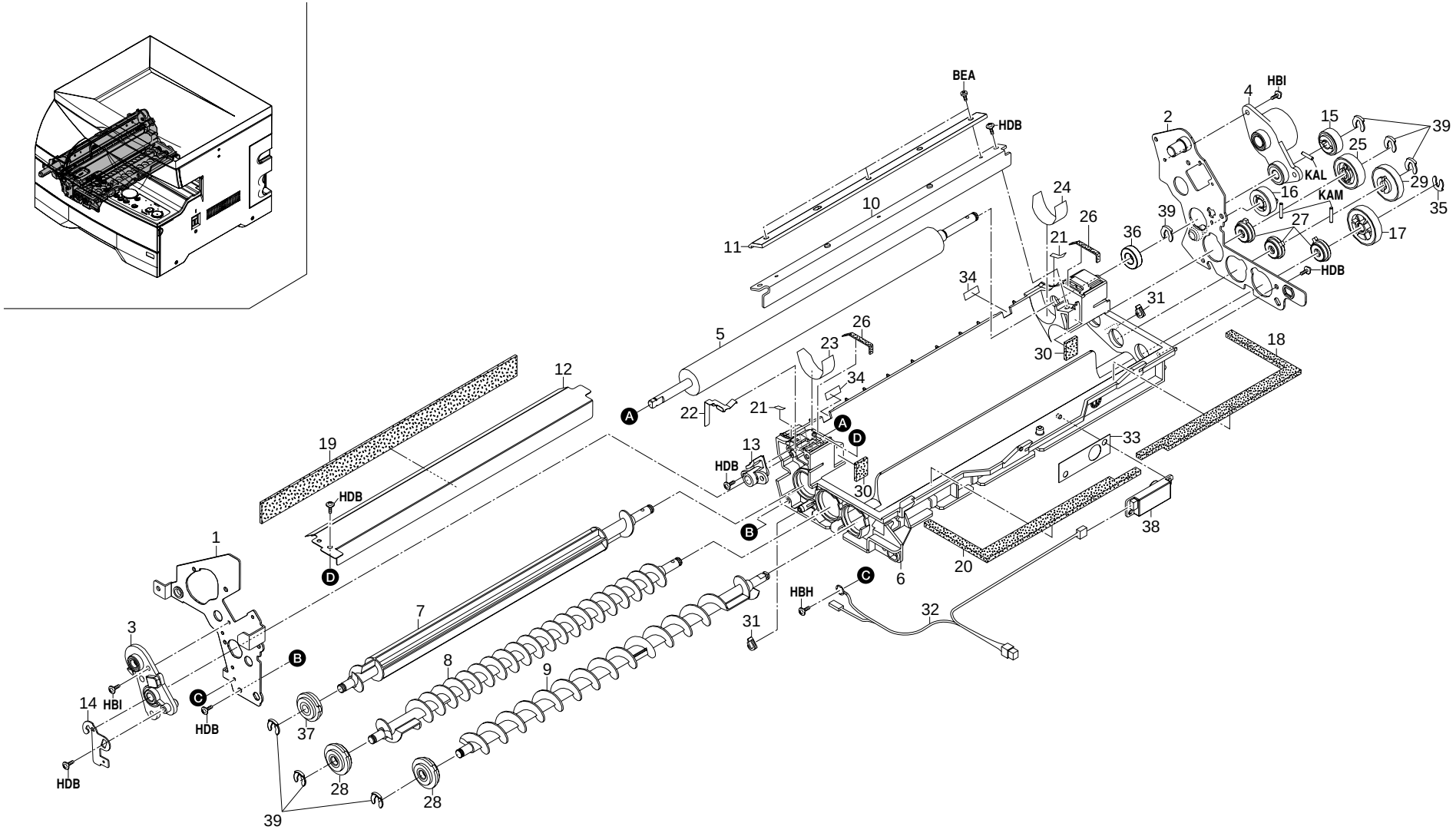

FIG. 10 IMAGING UNIT (DEVELOPING SECTION)

SP	Ref. No.	Part. No.	Description	Quantity		
				120V	230V	240V
	1	2A109010	FRONT FRAME,IMAGE FORMATION	1	1	1
	2	2A109020	REAR FRAME,IMAGE FORMATION	1	1	1
	3	2A109030	FRONT BUSHING,IMAGE FORMATION	1	1	1
	4	2A109040	REAR BUSHING,IMAGE FORMATION	1	1	1
	5	2A114010	MAGNET,DEVELOPING	1	1	1
	6	2A114021	HOUSING,DEVELOPING	1	1	1
	7	2A114030	PADDLE,DEVELOPING	1	1	1
	8	2A114040	LEFT SPIRAL,DEVELOPING	1	1	1
	9	2A114050	RIGHT SPIRAL,DEVELOPING	1	1	1
	10	2A114060	MOUNT,DOCTOR BLADE	1	1	1
	11	2A114070	DOCTOR BLADE,DEVELOPING	1	1	1
◉	12	2A114080	UPPER SEAL,DEVELOPING	1	1	1
	13	2A114090	FRONT BUSHING,MAGNET ROLLER	1	1	1
	14	2A114100	RETAINER,MAGNET ROLLER	1	1	1
◉	15	2A114110	GEAR 16,MAGNET ROLLER	1	1	1
◉	16	2A114120	GEAR 17,IDLE	1	1	1
◉	17	2A114130	RIGHT GEAR 26,SPIRAL	1	1	1
◉	18	2A114161	REAR SPONGE,DEVELOPING	1	1	1
◉	19	2A114170	UPPER SPONGE,DEVELOPING SEAL	1	1	1
◉	20	2A114181	FRONT SPONGE,DEVELOPING	1	1	1
◉	21	2A114190	SEAL,DEVELOPING	2	2	2
	22	2A114200	UPPER TERMINAL,DEVELOPING SEAL	1	1	1
	23	2A114260	FRONT SEAL,MAGNET ROLLER	1	1	1
	24	2A114270	REAR SEAL,MAGNET ROLLER	1	1	1
◉	25	2A114280	GEAR 22,PADDLE	1	1	1
◉	26	2A114290	SPONGE,DEVELOPING	2	2	2
◉	27	2A114300	BUSHING 6-16,DEVELOPING	3	3	3
◉	28	2A114311	BUSHING 6-21,DEVELOPING	2	2	2
◉	29	2A114320	GEAR 24,DEVELOPING	1	1	1
◉	30	2A114330	INNER SPONGE,DEVELOPING	2	2	2
	31	2A114360	SPACER,DEVELOPING	2	2	2
	32	2A127850	JUNCTION WIRING,DEVELOPING	1	1	1
◉	33	2AR14160	SPACER,TONER SENSOR	1	1	1
◉	34	2AR14300	LOWER FILM,DEVELOPING	2	2	2
	35	2A806250	RING STOPPER	1	1	1
◉	36	45592554	BEARING 688ADD	1	1	1
◉	37	49028113	BUSHING 6-19,DEV.UNIT	1	1	1
◉	38	33914190	TONER SENSOR	1	1	1
	39	34806150	STOPPER 5	7	7	7

- Parts with "•" are component parts or sub-assemblies of the assembly appearing immediately above them.
- Parts with "◉" indicates the Service parts.
- Parts with "• •" are component parts or sub-assembly with "•" appearing immediately above them.

FIG. 11 IMAGING UNIT (CLEANING SECTION)

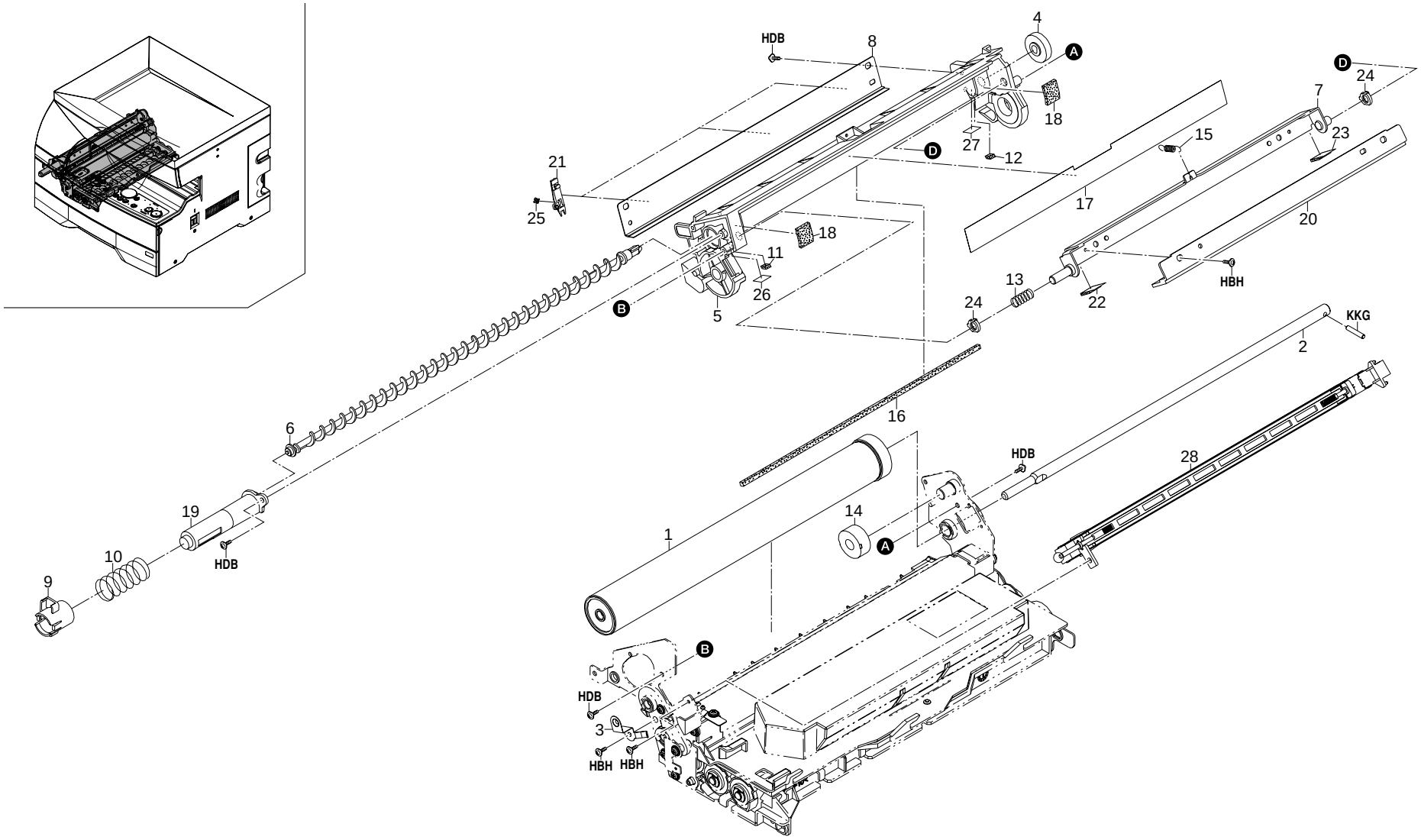

FIG. 11 IMAGING UNIT (CLEANING SECTION)

SP	Ref. No.	Part. No.	Description	Quantity		
				120V	230V	240V
◉	1	2A182010	SET,DRUM(NEUTRAL)	1	1	1
	2	2A108021	SHAFT,DRUM	1	1	1
	3	2A108030	GROUND PLATE,DRUM	1	1	1
◉	4	34918090	GEAR 19,DISPOSAL	1	1	1
	5	2A118014	HOUSING,CLEANING	1	1	1
	6	2A118020	SPIRAL,CLEANING	1	1	1
	7	2A118050	MOUNT,BLADE	1	1	1
◉	8	2A193040	PARTS,BLADE CLEANING LOWER(SP)	1	1	1
	9	2A118070	SHUTTER,DISPOSAL	1	1	1
	10	2A118080	SPRING,SHUTTER	1	1	1
◉	11	2A118101	FRONT SPONGE,CLEANING	1	1	1
◉	12	2A118111	REAR SPONGE,CLEANING	1	1	1
	13	2A118140	SPRING,THRUST	1	1	1
◉	14	2A118150	GEAR 25,THRUST	1	1	1
	15	2A118160	SPRING,BLADE	1	1	1
◉	16	2A118190	INNER SPONGE,CLEANING	1	1	1
	17	2A118200	INNER FILM,CLEANING	1	1	1
◉	18	2A118261	UPPER SPONGE,CLEANING	2	2	2
	19	2A118280	PIPE,SPIRAL	1	1	1
◉	20	2A193050	PARTS,BLADE CLEANING B(SP)	1	1	1
◉	21	2A118300	CLAW,DRUM SEPARATION	3	3	3
◉	22	2A118312	FRONT SPONGE,BLADE	1	1	1
◉	23	2A118323	REAR SPONGE,BLADE	1	1	1
◉	24	2A118350	BUSHING,BLADE MOUNT	2	2	2
◉	25	2A118370	PULLEY,DRUM SEPARATION	3	3	3
◉	26	2A118380	FRONT SEAL K,CLEANING	1	1	1
◉	27	2A118390	REAR SEAL K,CLEANING	1	1	1
◉	28	2A168010	MAIN CHARGER ASS'Y	1	1	1

- Parts with "•" are component parts or sub-assemblies of the assembly appearing immediately above them.
- Parts with "◉" indicates the Service parts.

- Parts with "• •" are component parts or sub-assembly with "•" appearing immediately above them.

FIG. 12 FIXING SECTION

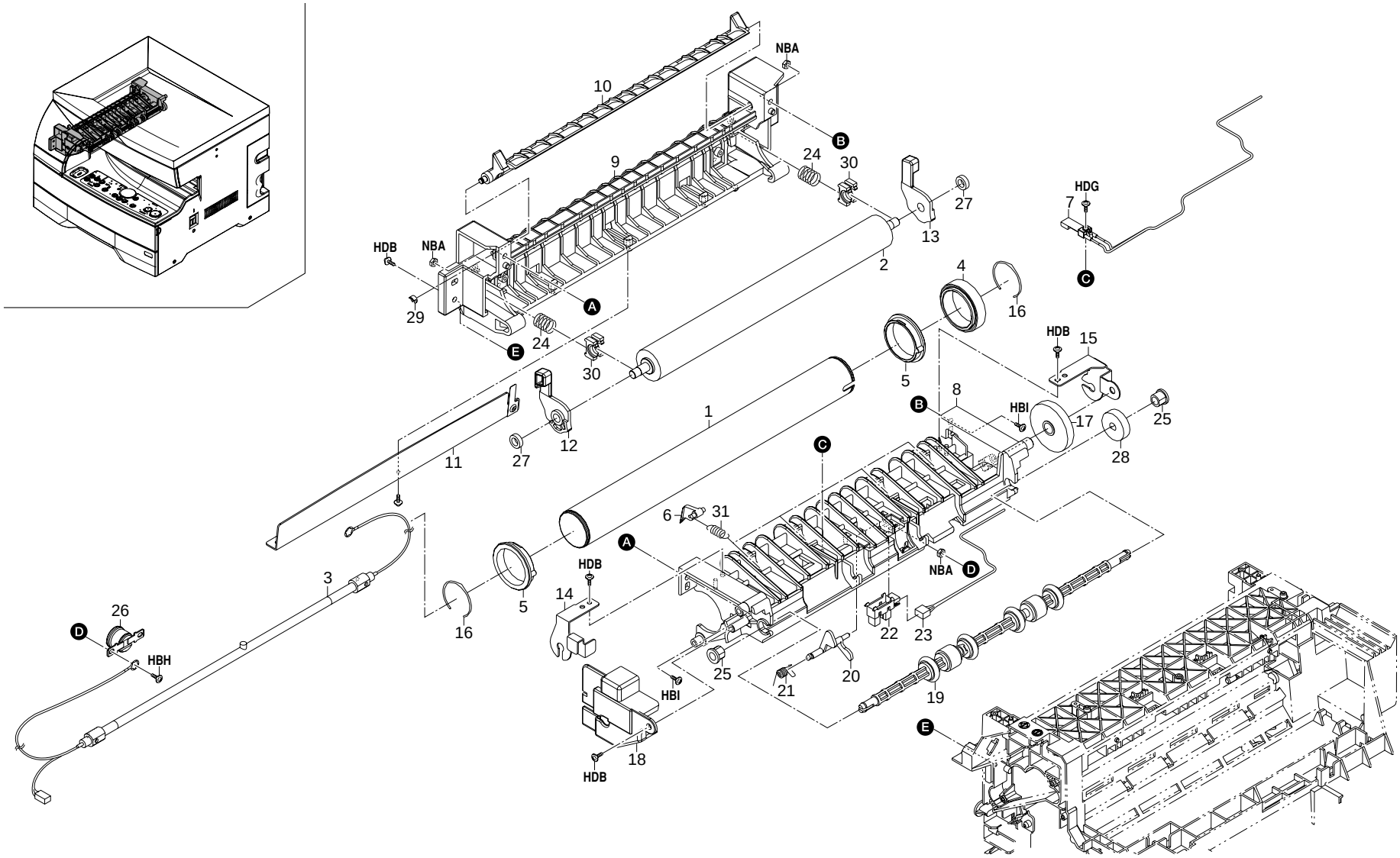

FIG. 12 FIXING SECTION

SP	Ref. No.	Part. No.	Description	Quantity		
				120V	230V	240V
◉	1	2A193060	PARTS,ROLLER HEAT(SP)	1	1	1
◉	2	2A193070	PARTS,ROLLER PRESS(SP)	1	1	1
◉	3	2A193080	PARTS,HEATER FIXING 120(SP)	1		
◉	3	2A193090	PARTS,HEATER FIXING 240(SP)		1	1
◉	4	2A120050	GEAR,HEAT ROLLER	1	1	1
◉	5	2A120060	BUSHING,HEAT ROLLER	2	2	2
◉	6	2A120071	SEPARATION CLAW,HEAT ROLLER	4	4	4
◉	7	2A120080	THERMISTOR,FIXING	1	1	1
	8	2A120090	RIGHT HOUSING,FIXING	1	1	1
	9	2A120100	LEFT HOUSING,FIXING	1	1	1
	10	2A120110	UPPER GUIDE,FIXING	1	1	1
	11	2A120120	LOWER GUIDE,FIXING	1	1	1
◉	12	2A120130	FRONT LEVER,FIXING PRESSURE RELEASE	1	1	1
◉	13	2A120140	REAR LEVER,FIXING PRESSURE RELEASE	1	1	1
	14	2A120150	FRONT SUPPORT PLATE,FIXING HEATER	1	1	1
	15	2A120160	REAR SUPPORT PLATE,FIXING HEATER	1	1	1
	16	2A120170	HOLDER,HEAT ROLLER	2	2	2
◉	17	2A120240	GEAR 44,FIXING IDLE	1	1	1
◉	18	2A120250	FRONT COVER,FIXING	1	1	1
◉	19	2A121010	ROLLER,EJECT	1	1	1
◉	20	2A121030	ACTUATOR,EJECT SWITCH	1	1	1
◉	21	2A121040	SPRING,EJECT SWITCH	1	1	1
◉	22	2A127050	SWITCH,PHOT0 INTERRUPTOR	1	1	1
	23	2A127550	JUNCTION WIRING,EJECT SWITCH	1	1	1
◉	24	2A120260	SPRING,PRESS ROLLER	2	2	2
	25	2A806030	BUSH FEED	2	2	2
◉	26	36220210	LEFT THERMOSTAT,FIXING	1	1	1
◉	27	63820190	BEARING, FIXING UNIT	2	2	2
	28	65014160	RIGHT GEAR 25,TONER SUPPLY	1	1	1
	29	65016080	STOP RING E3	1	1	1
	30	68820280	HOLDER,BEARING	2	2	2
◉	31	75720240	SPRING SEPARATION CLAW	4	4	4

• Parts with "•" are component parts or sub-assemblies of the assembly appearing immediately above them.
• Parts with "◉" indicates the Service parts.

• Parts with "• •" are component parts or sub-assembly with "•" appearing immediately above them.

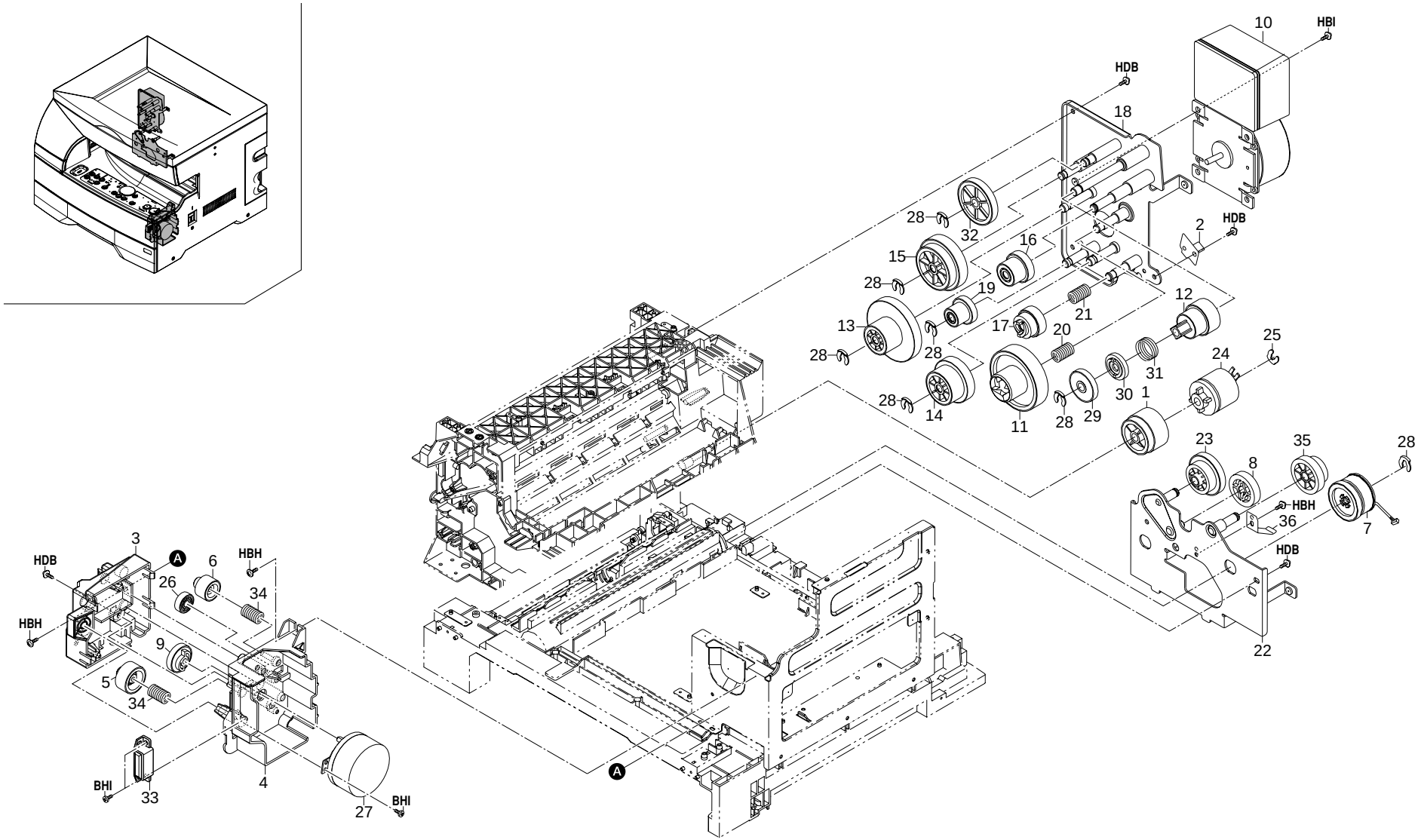
10
HBI
HDB
18
28
32
2
HDB
15
16
28
19
12
13
17
20
21
28
28
25
24
28
14
11
28
29
30
31
1
23
35
28
8
HBH
36
7
HDB
22
3
HDB
HBH
26
6
HBH
34
9
5
34
BHI
33
4
27
BHI
A
A

FIG. 13 DRIVING SECTION

SP	Ref. No.	Part. No.	Description	Quantity		
				120V	230V	240V
◉	1	2A106090	GEAR 32,REGISTRATION CLUTCH	1	1	1
	2	2A106100	GROUND PLATE,REGISTRATION ROLLER	1	1	1
	3	2A115010	HOUSING,CARTRIDGE DRIVE	1	1	1
	4	2A115020	MOUNT,CARTRIDGE DRIVE	1	1	1
	5	2A115030	GEAR 24A,CARTRIDGE DRIVE	1		
	5	2A115050	GEAR 24B,CARTRIDGE DRIVE		1	1
	6	2A115040	GEAR 18A,CARTRIDGE DRIVE	1		
	6	2A115060	GEAR 18B,CARTRIDGE DRIVE		1	1
◉	7	2AV27330	CLUTCH,PAPER FEED	1	1	1
	8	34922570	GEAR 23,DEVELOPING	1	1	1
◉	9	2A115070	GEAR,TONER MOTOR	1	1	1
◉	10	2A193100	PARTS,MOTOR MAIN(SP)	1	1	1
◉	11	2A122020	GEAR 53,DRUM DRIVE	1	1	1
◉	12	2A122030	GEAR 28/20,COUPLER	1	1	1
◉	13	2A122040	GEAR 97/25	1	1	1
◉	14	2A122050	GEAR 67/30	1	1	1
	15	2A122060	GEAR 45/40	1	1	1
	16	2A122080	GEAR 26/20	1	1	1
◉	17	2A122100	COUPLING,DEVELOPING DRIVE	1	1	1
	18	2A122110	MOUNT,MACHINE DRIVE	1	1	1
	19	2A122150	GEAR 23/16	1	1	1
	20	2A122190	SPRING,DRUM COUPLING	1	1	1
	21	2A122200	SPRING,DEVELOPING COUPLING	1	1	1
	22	2A122120	MOUNT,PAPER FEED DRIVE	1	1	1
	23	2A122160	GEAR 37/21	1	1	1
◉	24	2A127080	CLUTCH,REGISTRATION	1	1	1
	25	2A806250	RING STOPPER	1	1	1
	26	29822230	GEAR 16T,PF IDLE	1	1	1
◉	27	33915190	TONER MOTOR	1	1	1
	28	34806150	STOPPER 5	7	7	7
◉	29	35322190	GEAR 28,FIXING COUPLER	1	1	1
	30	35322200	COUPLER,FIXING DRIVE	1	1	1
	31	35322210	SPRING,FIXING COUPLER	1	1	1
	32	63822220	GEAR,41	1	1	1
	33	71804400	MAGNET,LOWER FRONT COVER	1	1	1
	34	73818100	SPRING, BLADE THRUST	2	2	2
	35	2A122180	GEAR 32/18	1	1	1
	36	2A102510	LEFT HPLDER,CASETTE	1	1	1

- Parts with "•" are component parts or sub-assemblies of the assembly appearing immediately above them.
- Parts with "◉" indicates the Service parts.
- Parts with "• •" are component parts or sub-assembly with "•" appearing immediately above them.

FIG. 14 ELECTRICAL COMPONENTS

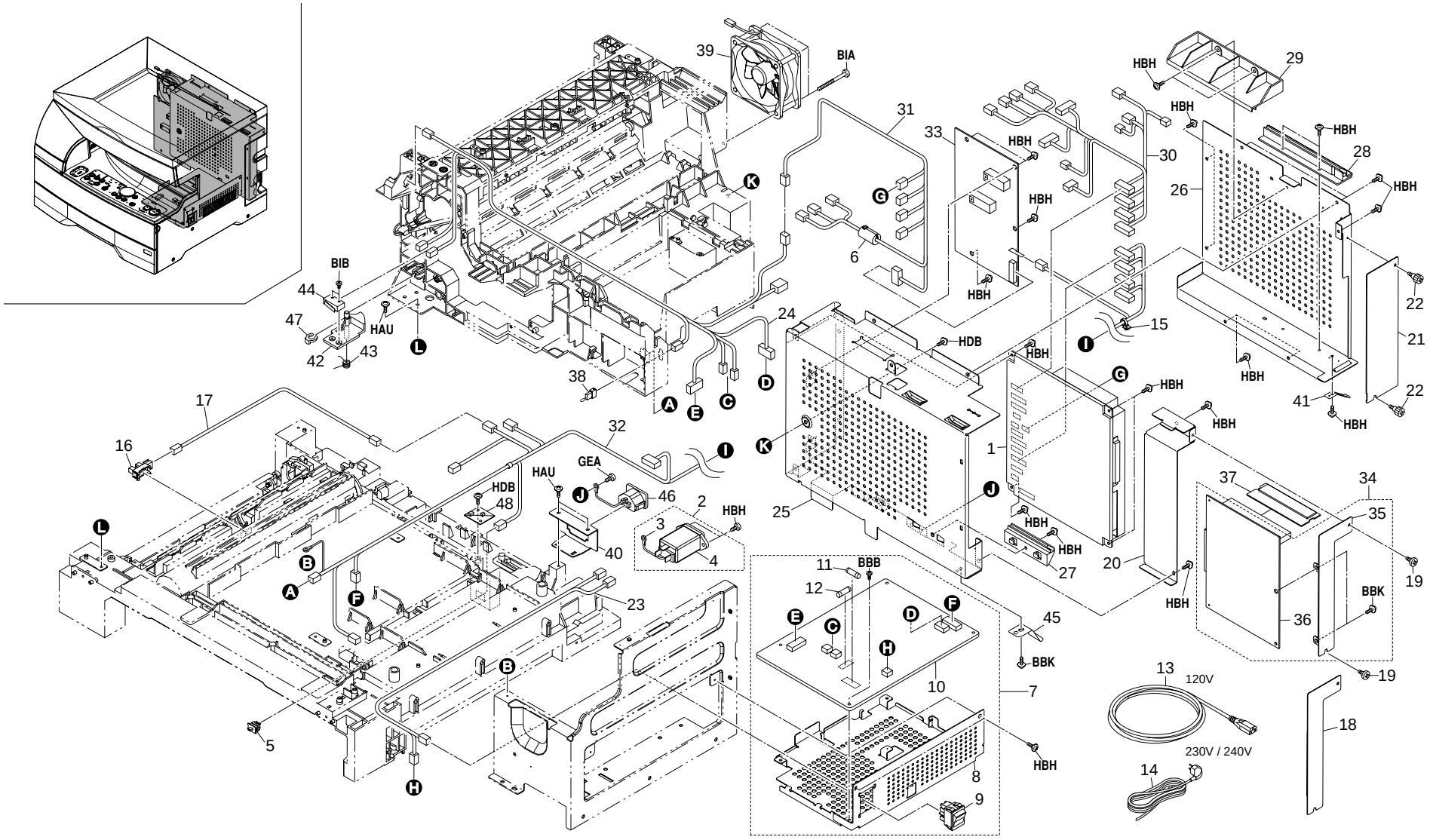

FIG. 14 ELECTRICAL COMPONENTS

2A1/2A2

SP	Ref. No.	Part. No.	Description	Quantity		
				120V	230V	240V
◉	1	2A101022	MAIN PCB ASS'Y (KM-1510)		1	1
◉	1	2A101060	MAIN PCB ASS'Y(F C C) (KM-1510)	1		
◉	1	2A201020	MAIN PCB ASS'Y (KM-1810)		1	1
◉	1	2A201030	MAIN PCB ASS'Y(F C C) (KM-1810)	1		
	2	2A101050	NOISE FILTER ASS'Y(230)		1	1
	3	•L0223130	ROUND TYPE TERMINAL,M4,LRT-51T-4FE		1	1
	4	•63127120	NOISE FILTER,10A		1	1
◉	5	35927420	SWITCH,SIZE	1	1	1
	6	65027470	CORE,7-15X18	1	1	1
◉	7	2A193010	PARTS,POWER SOURCE ASS'Y 120(SP)	1		
◉	7	2A193020	PARTS,POWER SOURCE ASS'Y 230(SP)		1	1
	8	•2A126160	MOUNT,POWER SOURCE PCB	1		
◉	9	•2A127070	SWITCH,MAIN	1		
	10	•2A128051	POWER SOURCE PCB 120	1		
	10	•2A128061	POWER SOURCE PCB 230		1	1
◉	11	••M1661000	FUSE 15A,314015	1		
◉	11	••M1756010	FUSE S506-6,3A(BUSSMANN)		1	1
◉	12	••M1655030	FUSE,237005(LITTEL)	1		
◉	12	••M1753010	FUSE S506-3,15A(BUSSMANN)		1	1
	13	2AL27090	POWER CORD(USA)	1		
	14	2AN27360	POWER CORD(230)		1	1
	15	M2607010	BINDING BAND,PLT1M	1	1	1
◉	16	2A127050	SWITCH,PHOTO INTERRUPTOR	1	1	1
	17	2A127830	JUNCTION WIRING,REGISTRATION SW	1	1	1
	18	2A126030	SHIELD,MEMORY BOARD (KM-1510)	1	1	1
	19	2A126130	PIN,OPTION	2	2	2
	20	2A126150	COVER PCB,SHIELD	1	1	1
	21	2AV26220	LOWER LID,SHIELD	1	1	1
	22	3BH26030	PIN,OPTION	2	2	2
	23	2A127791	WIRE,INLET	1		
	23	2A127601	WIRE,INLET(230)		1	1
	24	2A127820	WIRE,FIXING HEATER	1	1	1
	25	2A126010	MOUNT,MAIN PCB	1	1	1
	26	2A126020	SHIELD,PCB	1	1	1
	27	2A126060	GUIDE,MEMORY BOARD	1	1	1
	28	2A126070	GUIDE,NETWORK BOARD	1	1	1
	29	2A126080	GUIDE,PRINTER BOARD	1	1	1
	30	2A127500	WIRE,ISU	1	1	1
	31	2A127510	LEFT WIRE	1	1	1
	32	2A127521	FRONT WIRE	1	1	1
◉	33	2A193120	PARTS,PCB HIGH VOLTAGE(SP)	1	1	1
◉	34	2A201010	MEMORY PCB ASS'Y (KM-1810)	1	1	1
	35	•2A226010	MOUNT,MEMORY BOARD (KM-1810)	1	1	1
	36	•2A228010	MEMORY PCB (KM-1810)	1	1	1
◉	37	2A228020	IC DIMM (KM-1810)	1	1	1
	38	2A127800	WIRE,RELAY SHORT CIRCUIT	1	1	1
◉	39	2A123010	FAN,COOLING	1	1	1
	40	2A102130	MOUNT,INLET	1		
	40	2A102500	MOUNT,INLET(230)		1	1
	41	2A102120	GROUND PLATE,INLET	1	1	1
	42	2A102140	WORK PLATE,SAFETY SWITCH	1	1	1
	43	2A102150	SPRING,SAFETY SWITCH	1	1	1
◉	44	2A127040	SWITCH,INTERLOCK	1	1	1
	45	2A102520	RIGHT HOLDER.CASSETTE	1	1	1
	46	2A127060	INLET 3P,POWER SOURCE	1		
	47	63511220	STOP RING,4	1	1	1
◉	48	2A327010	SENSOR,HUMIDITY	1	1	1

• Parts with "•" are component parts or sub-assemblies of the assembly appearing immediately above them.
• Parts with "◉" indicates the Service parts.

• Parts with "• •" are component parts or sub-assembly with "•" appearing immediately above them.

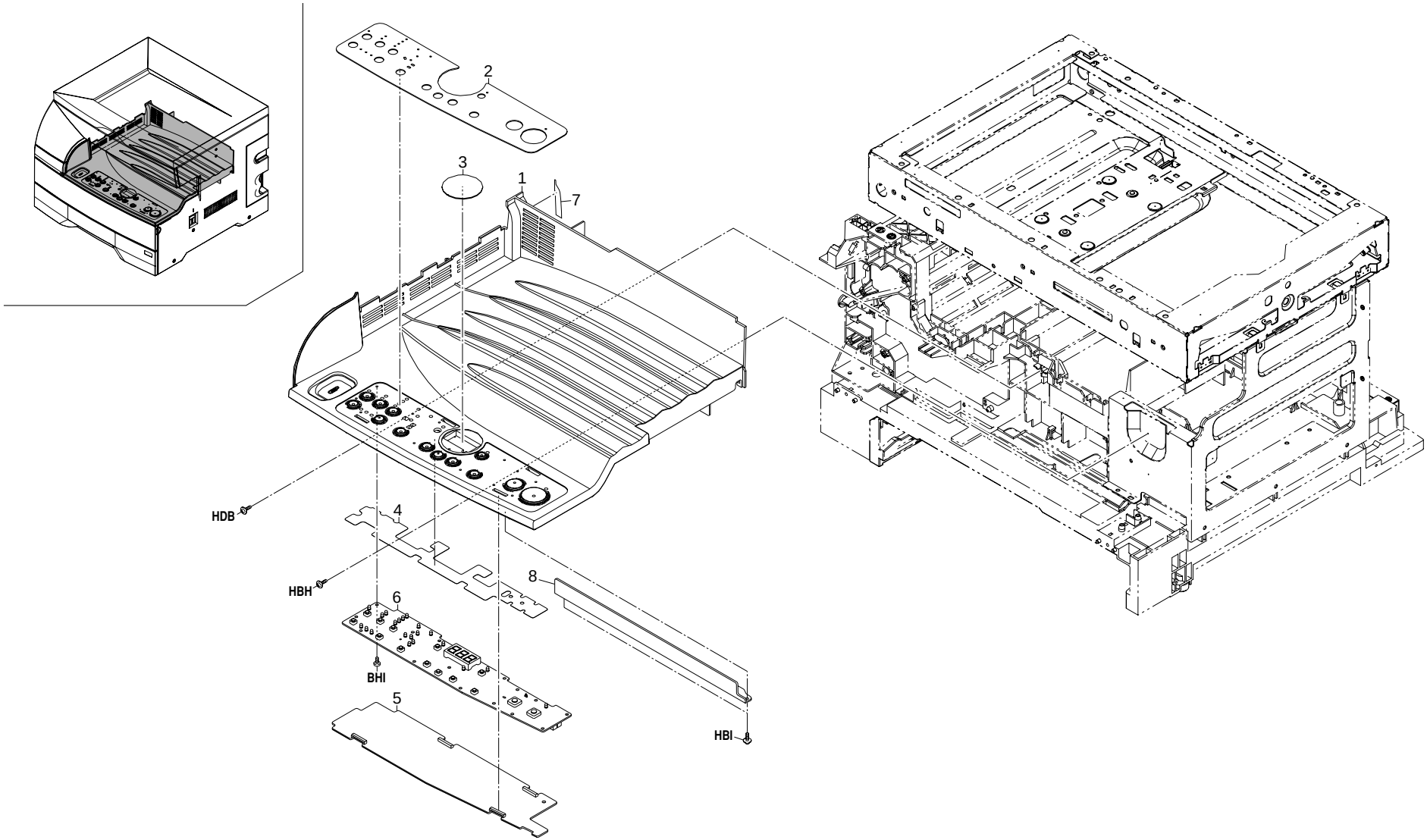
2
3
1
7
HDB
4
HBH
8
6
BHI
5
HBI

FIG. 15 OPERATION UNIT

SP	Ref. No.	Part. No.	Description	Quantity		
				120V	230V	240V
◉	1	2A104063	TRAY,EJECT	1	1	1
◉	2	2A125021	SHEET A,OPERATION UNIT(INCH)	1		
◉	2	2A125061	SHEET A,OPERATION UNIT(METRIC)		1	
◉	2	2A125071	SHEET A,OPERATION UNIT(MAP)			1
◉	3	2A125030	SHEET B,OPERATION UNIT	1	1	1
◉	4	2A125040	SHEET,DUST SHIELD	1	1	1
◉	5	2A125050	LID,OPERATION UNIT	1	1	1
◉	6	2A193130	PARTS,PCB OPERATION UNIT(SP)	1	1	1
◉	7	2A104120	WIND SHIELD PLATE,EJECT TRAY	1	1	1
	8	2A102160	AUXILIARY PLATE,EJECT TRAY	1	1	1

• Parts with "•" are component parts or sub-assemblies of the assembly appearing immediately above them.
• Parts with "◉" indicates the Service parts.

• Parts with "• •" are component parts or sub-assembly with "•" appearing immediately above them.

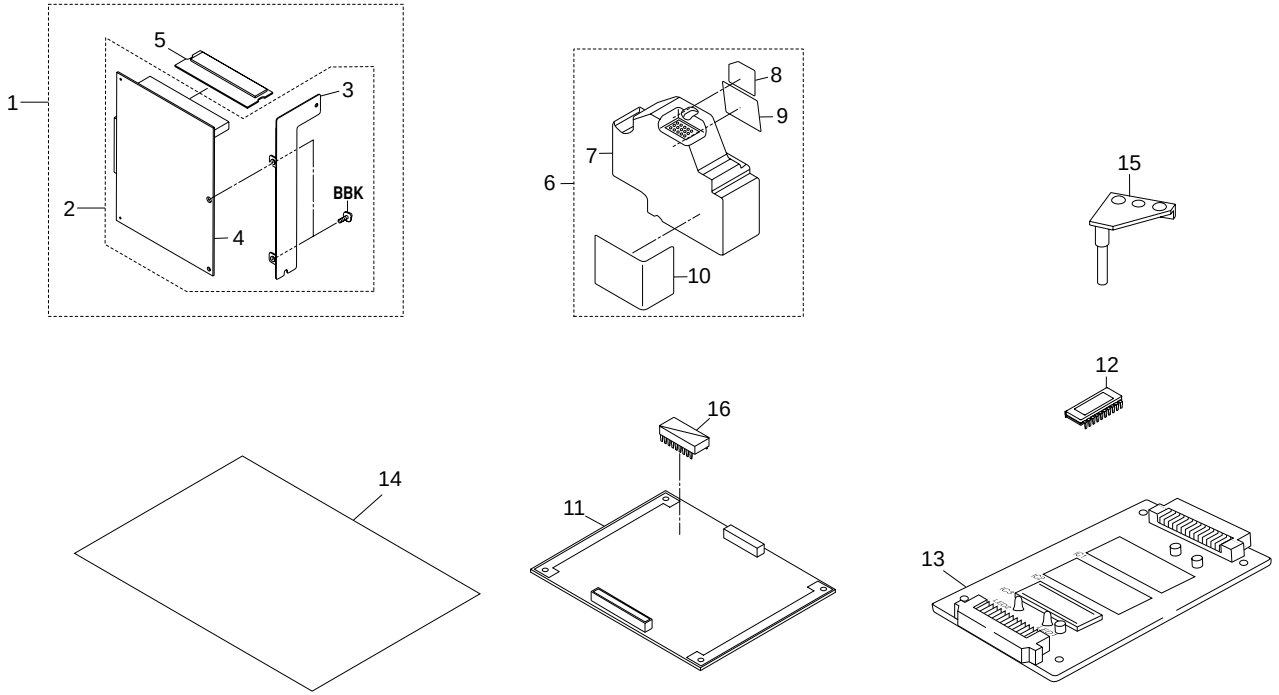
1
2
3
4
5
BBK
6
7
8
9
10
11
12
13
14
15
16

FIG. 16 ACCESSORIES & OPTION

SP	Ref. No.	Part. No.	Description	Quantity		
				120V	230V	240V
	1	2A160010	MEMORY PCB ASS'Y OP (KM-1510)	1	1	1
◉	2	•2A201010	MEMORY PCB ASS'Y (KM-1510)	1	1	1
	3	••2A226010	MOUNT,MEMORY BOARD (KM-1510)	1	1	1
	4	••2A228010	MEMORY PCB (KM-1510)	1	1	1
◉	5	•2A228020	IC DIMM (KM-1510)	1	1	1
	6	2A173800	TONER DISPOSAL TANK ASS'Y	1	1	1
	7	•2A173810	TANK,TONER DISPOSAL	1	1	1
	8	•2A173820	SHIELD,TONER DISPOSAL TANK	1	1	1
	9	•2A173830	TAPE,TONER DISPOSAL TANK	1	1	1
	10	•36505111	LABEL,TONER DISPOSAL TANK	1	1	1
◉	11	2AV68030	SPECIAL TOOL MEMORY PCB	1	1	1
◉	12	2A168050	IC,ROM MAIN PCB	1	1	1
◉	13	35968010	FLASH JIG PCB	1	1	1
◉	14	2A168070	SHEET,SCANNER ADJUSTMENT	1	1	1
◉	15	2A168080	SPECIAL TOOL,FRAME RETAINING	1	1	1
◉	16	NAS09010	BACKUP RAM M48Z35Y-70PC	1	1	1

• Parts with "•" are component parts or sub-assemblies of the assembly appearing immediately above them.
• Parts with "◉" indicates the Service parts.

• Parts with "• •" are component parts or sub-assembly with "•" appearing immediately above them.

SP	Part. No.	Description	Quantity			Fig. No.
			120V	230V	240V	
	18512340	GUIDE,SCANNER WIRE	2	2	2	8
	19507011	CASSETTE,PAPER FEED	1	1	1	3
	19507040	BASE,CASSETTE	1	1	1	3
	19507050	LEVER,CASSETTE BASE RELEASE	1	1	1	3
	19507080	REAR STOPPER,PAPER(METRIC)		2	2	3
	19512210	RETAINING PIN,MIRROR FRAME	1	1	1	1
	2AC12440	GROUND PLATE,INVERTER	1	1	1	8
	2AL27090	POWER CORD(USA)	1			14
	2AN27360	POWER CORD(230)		1	1	14
◉	2AR14160	SPACER,TONER SENSOR	1	1	1	10
◉	2AR14300	LOWER FILM,DEVELOPING	2	2	2	10
	2AR17080	COLLAR,TRANSFER ROLLER	2	2	2	4
	2AR22160	SPRING,FIXING TENSION	1	1	1	8
◉	2AV12450	SLIDER,SCANNER	8	8	8	8
◉	2AV12500	SPRING,SCANNER TENSION	2	2	2	8
	2AV26220	LOWER LID,SHIELD	1	1	1	14
◉	2AV27330	CLUTCH,PAPER FEED	1	1	1	13
◉	2AV27340	CLUTCH,BYPASS	1	1	1	2
◉	2AV68030	SPECIAL TOOL MEMORY PCB	1	1	1	16
	2A005060	LABEL,HIGH VOLTAGE CAUTION(EUR)	1	1	1	1
	2A100010	SCANNER FRAME ASS'Y	1	1	1	8
◉	2A101022	MAIN PCB ASS'Y		1	1	14
	2A101050	NOISE FILTER ASS'Y(230)		1	1	14
◉	2A101060	MAIN PCB ASS'Y(F C C)	1			14
	2A102010	BASE	1	1	1	2
	2A102021	FRAME IMAGE FORMATION	1	1	1	2
	2A102030	RIGHT FRAME	1	1	1	2
	2A102090	LEFT RAIL,CASSETTE	1	1	1	2
◉	2A102100	HANDLE,JAM RELEASE	1	1	1	4
	2A102110	FULCRUM PIN,CONVEYING	1	1	1	4
	2A102120	GROUND PLATE,INLET	1	1	1	14
	2A102130	MOUNT,INLET	1			14
	2A102140	WORK PLATE,SAFETY SWITCH	1	1	1	14
	2A102150	SPRING,SAFETY SWITCH	1	1	1	14
	2A102160	AUXILIARY PLATE,EJECT TRAY	1	1	1	15
	2A102500	MOUNT,INLET(230)		1	1	14
	2A102510	LEFT HPLDER,CASETTE	1	1	1	13
	2A102520	RIGHT HOLDER.CASSETTE	1	1	1	14
◉	2A104012	FRONT COVER	1	1	1	1
◉	2A104021	UPPER FRONT COVER	1	1	1	1

SP	Part. No.	Description	Quantity			Fig. No.
			120V	230V	240V	
◉	2A104032	RIGHT COVER	1	1	1	1
◉	2A104041	LEFT COVER	1	1	1	1
◉	2A104052	COVER,CONVEYING	1	1	1	4
◉	2A104063	TRAY,EJECT	1	1	1	15
◉	2A104071	REAR COVER	1	1	1	1
◉	2A104080	COVER,DISPOSAL TANK	1	1	1	1
◉	2A104090	COVER,PRINTER BOARD	1	1	1	1
◉	2A104100	RIGHT FULCRUM PLATE,FRONT COVER	1	1	1	1
◉	2A104110	LEFT FULCRUM PLATE,FRONT COVER	1	1	1	1
◉	2A104120	WIND SHIELD PLATE,EJECT TRAY	1	1	1	15
◉	2A105080	LABEL,HIGH TEMPERATURE CAUTION	1	1	1	4
◉	2A105091	LABEL,CONVEYING JAM	1	1	1	1
◉	2A105131	LABEL,LASER UNIT	1	1	1	9
◉	2A105140	LABEL,CARTRIDGE OPERATION	1	1	1	1
◉	2A105160	LABEL,DF CAUTION	1	1	1	1
	2A105180	LABEL,CAUTION CONTACT GLASS	1	1	1	8
◉	2A106010	PULLEY,PAPER FEED	2	2	2	2
◉	2A106020	LEFT ROLLER,REGISTRATION	1	1	1	4
◉	2A106031	RIGHT ROLLER,REGISTRATION	1	1	1	2
	2A106040	SHAFT,PAPER FEED	1	1	1	2
	2A106060	SPRING,REGISTRATION PRESSING	1	1	1	4
◉	2A106071	ACTUATOR,REGISTRATION	1	1	1	2
◉	2A106081	SPRING,REGISTRATION ACTUATOR	1	1	1	2
◉	2A106090	GEAR 32,REGISTRATION CLUTCH	1	1	1	13
	2A106100	GROUND PLATE,REGISTRATION ROLLER	1	1	1	13
	2A106120	FRONT SPRING,REGISTRATION PRESSING	1	1	1	4
◉	2A106150	LEFT GEAR 14,REGISTRATION	1	1	1	4
◉	2A106160	RIGHT GEAR 15,REGISTRATION	1	1	1	2
◉	2A106170	PULLEY B,PAPER FEED	2	2	2	2
	2A106180	SHAFT,PAPER FEED CL	1	1	1	2
	2A106191	SUPPORT PLATE,GUIDE PULLEY	2	2	2	2
◉	2A106200	RIGHT GUIDE FILM,REGISTRATION ADMISSION	2	2	2	2
◉	2A106210	LEFT GUIDE FILM,REGISTRATION ADMISSION	2	2	2	4
◉	2A106220	GUIDE FILM,PAPER FEED CONFLUENCE	1	1	1	2
◉	2A106230	GUIDE FILM,PRIMARY PAPER FEED	1	1	1	2
◉	2A106240	FRONT SHEET,REGISTRATION	1	1	1	2
◉	2A106510	PULLEY,BYPASS	1	1	1	2
◉	2A106530	UPPER GUIDE,BYPASS	1	1	1	2
	2A106540	GUIDE,BYPASS LIFT	1	1	1	2
◉	2A106550	HOLDER,BYPASS PAD	1	1	1	2

• Parts with "◉" indicates the Service parts.

SP	Part. No.	Description	Quantity			Fig. No.
			120V	230V	240V	
◉	2A106560	CAM,BYPASS LIFT	1	1	1	2
◉	2A106570	STOPPER,BYPASS LIFT	1	1	1	2
◉	2A106581	SPRING,BYPASS LIFT	1	1	1	2
◉	2A106590	SPRING,BYPASS PAD	1	1	1	2
◉	2A106680	PAD,BYPASS	1	1	1	2
	2A106690	SHAFT,BYPASS	1	1	1	2
	2A106700	GROUND PLATE,BYPASS LIFT	1	1	1	2
◉	2A106721	GUIDE,BYPASS PAD	1	1	1	2
◉	2A106730	FRONT BUSHING,BYPASS	1	1	1	2
	2A106740	VIBRATION INSULATOR,PAD HOLDER	1	1	1	2
◉	2A106760	FRICTION PLATE C,BYPASS LIFT	1	1	1	2
	2A106770	SHEET,PAD HOLDER	1	1	1	2
◉	2A106810	TABLE,BYPASS	1	1	1	4
◉	2A106820	COVER,BYPASS TABLE	1	1	1	4
	2A106831	FRONT CURSOR,BYPASS	1	1	1	4
	2A106841	REAR CURSOR,BYPASS	1	1	1	4
◉	2A107011	COVER,CASSETTE	1	1	1	3
	2A107020	GROUND PLATE,CASSETTE	1	1	1	3
	2A107030	SPRING,CASSETTE	2	2	2	3
◉	2A107040	SLIDER,CASSETTE	2	2	2	2
◉	2A107050	FRONT CLAW CASSETTE	1	1	1	3
◉	2A107060	FRICTION PLATE,CASSETTE	2	2	2	3
	2A108021	SHAFT,DRUM	1	1	1	11
	2A108030	GROUND PLATE,DRUM	1	1	1	11
	2A109010	FRONT FRAME,IMAGE FORMATION	1	1	1	10
	2A109020	REAR FRAME,IMAGE FORMATION	1	1	1	10
	2A109030	FRONT BUSHING,IMAGE FORMATION	1	1	1	10
	2A109040	REAR BUSHING,IMAGE FORMATION	1	1	1	10
	2A110150	LIGHT SHIELD,CLEANING LAMP	1	1	1	2
◉	2A112080	FRONT WIRE,SCANNER	1	1	1	8
◉	2A112090	REAR WIRE,SCANNER	1	1	1	8
◉	2A112111	MIRROR A	1	1	1	8
◉	2A112120	MIRROR B	2	2	2	8
◉	2A112130	CONTACT GLASS,DF	1	1	1	8
◉	2A112160	CONTACT GLASS	1	1	1	8
	2A112170	RETAINER,WIRE	2	2	2	8
	2A112180	MIRROR FRAME A	1	1	1	8
	2A112190	MIRROR FRAME B	1	1	1	8
	2A112200	ADJUSTING PLATE B,MIRROR FRAME	1	1	1	8
	2A112210	LEFT MOUNT,DF HINGE	1	1	1	8

SP	Part. No.	Description	Quantity			Fig. No.
			120V	230V	240V	
	2A112220	RIGHT MOUNT,DF HINGE	1	1	1	8
	2A112230	COVER,INVERTER	1	1	1	8
	2A112240	REFLECTOR,SCANNER	1	1	1	8
	2A112250	SHAFT,SCANNER DRIVE	1	1	1	8
◉	2A112260	GEAR Z30	1	1	1	8
◉	2A112270	GEAR Z23	1	1	1	8
	2A112280	HOLDER,FFC	1	1	1	8
	2A112290	GUIDE FFC2	1	1	1	8
	2A112300	HOLDER,ISU WIRE	1	1	1	8
	2A112310	MOUNT,SCANNER PI	1	1	1	8
	2A112320	MOUNT,SCANNER MOTOR	1	1	1	8
◉	2A112330	GEAR 27/13,SCANNER DRIVE	1	1	1	8
◉	2A112340	BELT S2M60,SCANNER	1	1	1	8
	2A112350	STANDARD PLATE,SHADING	1	1	1	8
◉	2A112360	SPONGE,ORIGINAL SIZE INDICATOR	1	1	1	8
	2A112370	MOUNT,DRIVE SHIFT	1	1	1	8
◉	2A112380	GEAR 13,DRIVE SHIFT	1	1	1	8
◉	2A112390	GEAR 25,DRIVE SHIFT	1	1	1	8
	2A112400	LEVER,DRIVE SHIFT	1	1	1	8
◉	2A112410	FRICTION PLATE,DRIVE SHIFT	1	1	1	8
	2A112420	COLLAR,JOINT	1	1	1	8
	2A112430	SPRING,FRICTION PLATE	1	1	1	8
◉	2A112441	LEFT ORIGINAL SIZE INDICATOR,ORIGINAL	1	1	1	8
◉	2A112451	REAR ORIGINAL SIZE INDICATOR,ORIGINAL	1	1	1	8
	2A112470	GROUND PLATE,SCANNER MOTOR	1	1	1	8
	2A112490	PULLEY B,MIRROR FRAME	2	2	2	8
	2A112520	COVER,ISU	1	1	1	8
	2A112530	WORK PLATE,SCANNER DRIVE	1	1	1	8
	2A112620	LEFT GROUND PLATE,ISU MOUNT	2	2	2	8
	2A112630	RIGHT GROUND PLATE,ISU MOUNT	1	1	1	8
	2A112640	SPRING,JOINT DRIVE	1	1	1	8
◉	2A112650	FRONT SEAL,SCANNER BASE	1	1	1	8
◉	2A112660	REAR SEAL,SCANNER BASE	1	1	1	8
	2A112670	SPONGE,SCANNER BASE	1	1	1	8
	2A112680	FRONT SEAL,SCANNER	1	1	1	8
	2A112700	RETAINING PIN A,MIRROR FRAME	1	1	1	1
	2A113010	UNIT,LSU	1	1	1	9
◉	2A113020	SPONGE 1,LSU	1	1	1	9
◉	2A113030	SPONGE 2,LSU	1	1	1	9
◉	2A113040	SPONGE 3,LSU	1	1	1	9

• Parts with "◉" indicates the Service parts.

SP	Part. No.	Description	Quantity			Fig. No.
			120V	230V	240V	
◉	2A113050	SPONGE 4,LSU	1	1	1	9
	2A114010	MAGNET,DEVELOPING	1	1	1	10
	2A114021	HOUSING,DEVELOPING	1	1	1	10
	2A114030	PADDLE,DEVELOPING	1	1	1	10
	2A114040	LEFT SPIRAL,DEVELOPING	1	1	1	10
	2A114050	RIGHT SPIRAL,DEVELOPING	1	1	1	10
	2A114060	MOUNT,DOCTOR BLADE	1	1	1	10
	2A114070	DOCTOR BLADE,DEVELOPING	1	1	1	10
◉	2A114080	UPPER SEAL,DEVELOPING	1	1	1	10
	2A114090	FRONT BUSHING,MAGNET ROLLER	1	1	1	10
	2A114100	RETAINER,MAGNET ROLLER	1	1	1	10
◉	2A114110	GEAR 16,MAGNET ROLLER	1	1	1	10
◉	2A114120	GEAR 17,IDLE	1	1	1	10
◉	2A114130	RIGHT GEAR 26,SPIRAL	1	1	1	10
◉	2A114161	REAR SPONGE,DEVELOPING	1	1	1	10
◉	2A114170	UPPER SPONGE,DEVELOPING SEAL	1	1	1	10
◉	2A114181	FRONT SPONGE,DEVELOPING	1	1	1	10
◉	2A114190	SEAL,DEVELOPING	2	2	2	10
	2A114200	UPPER TERMINAL,DEVELOPING SEAL	1	1	1	10
	2A114260	FRONT SEAL,MAGNET ROLLER	1	1	1	10
	2A114270	REAR SEAL,MAGNET ROLLER	1	1	1	10
◉	2A114280	GEAR 22,PADDLE	1	1	1	10
◉	2A114290	SPONGE,DEVELOPING	2	2	2	10
◉	2A114300	BUSHING 6-16,DEVELOPING	3	3	3	10
◉	2A114311	BUSHING 6-21,DEVELOPING	2	2	2	10
◉	2A114320	GEAR 24,DEVELOPING	1	1	1	10
◉	2A114330	INNER SPONGE,DEVELOPING	2	2	2	10
	2A114340	HOLDER,DEVELOPING	1	1	1	2
	2A114360	SPACER,DEVELOPING	2	2	2	10
	2A115010	HOUSING,CARTRIDGE DRIVE	1	1	1	13
	2A115020	MOUNT,CARTRIDGE DRIVE	1	1	1	13
	2A115030	GEAR 24A,CARTRIDGE DRIVE	1			13
	2A115040	GEAR 18A,CARTRIDGE DRIVE	1			13
	2A115050	GEAR 24B,CARTRIDGE DRIVE		1	1	13
	2A115060	GEAR 18B,CARTRIDGE DRIVE		1	1	13
◉	2A115070	GEAR,TONER MOTOR	1	1	1	13
◉	2A116010	ROLLER,TRANSFER	1			4
	2A116020	FRONT GUIDE,TRANSFER	1	1	1	4
◉	2A116040	PULLEY,TRANSFER	2	2	2	4
	2A116050	REAR GUIDE TRANSFER	1	1	1	4

SP	Part. No.	Description	Quantity			Fig. No.
			120V	230V	240V	
	2A116060	HOUSING,CONVEYING	1	1	1	4
	2A116070	SPRING,CONVEYING PRESSURE	2	2	2	4
	2A116080	FRONT SPRING,TRANSFER ROLLER	1	1	1	4
	2A116090	REAR SPRING,TRANSFER ROLLER	1	1	1	4
	2A116100	SHAFT,HOOK	1	1	1	4
◉	2A116111	FRONT BUSHING,TRANSFER PRESSURE	2	2	2	4
◉	2A116121	REAR BUSHING,TRANSFER PRESSURE	2	2	2	4
	2A116130	HOLDER,PRESSURE SPRING	3	3	3	4
	2A116140	TERMINAL,TRANSFER GUIDE	1	1	1	4
	2A116150	HOLDER,TRANSFER PRESSURE SPRING	1	1	1	4
	2A116160	SPRING,CONVEYING RELEASE	1	1	1	4
◉	2A116171	STATIC ELIMINATOR,TRANSFER	1	1	1	4
◉	2A116180	BUSHING,TRANSFER	2	2	2	4
◉	2A116190	GEAR,TRANSFER	1	1	1	4
◉	2A116200	ROLLER,TRANSFER,METRIC		1	1	4
◉	2A116210	FRONT SHEET,TRANSFER GUIDE	1	1	1	4
◉	2A116220	CLEANER,TRANSFER	1	1	1	4
◉	2A116240	SEAL B,TRANSFER ROLLER	2	2	2	4
	2A118014	HOUSING,CLEANING	1	1	1	11
	2A118020	SPIRAL,CLEANING	1	1	1	11
	2A118050	MOUNT,BLADE	1	1	1	11
	2A118070	SHUTTER,DISPOSAL	1	1	1	11
	2A118080	SPRING,SHUTTER	1	1	1	11
◉	2A118101	FRONT SPONGE,CLEANING	1	1	1	11
◉	2A118111	REAR SPONGE,CLEANING	1	1	1	11
	2A118140	SPRING,THRUST	1	1	1	11
◉	2A118150	GEAR 25,THRUST	1	1	1	11
	2A118160	SPRING,BLADE	1	1	1	11
◉	2A118190	INNER SPONGE,CLEANING	1	1	1	11
	2A118200	INNER FILM,CLEANING	1	1	1	11
	2A118240	DETECTION PLATE,DISPOSAL TANK	1	1	1	1
	2A118250	SPRING,TANK DETECTION	1	1	1	1
◉	2A118261	UPPER SPONGE,CLEANING	2	2	2	11
	2A118280	PIPE,SPIRAL	1	1	1	11
◉	2A118300	CLAW,DRUM SEPARATION	3	3	3	11
◉	2A118312	FRONT SPONGE,BLADE	1	1	1	11
◉	2A118323	REAR SPONGE,BLADE	1	1	1	11
◉	2A118350	BUSHING,BLADE MOUNT	2	2	2	11
◉	2A118370	PULLEY,DRUM SEPARATION	3	3	3	11
◉	2A118380	FRONT SEAL K,CLEANING	1	1	1	11

• Parts with "◉" indicates the Service parts.

SP	Part. No.	Description	Quantity			Fig. No.
			120V	230V	240V	
◉	2A118390	REAR SEAL K,CLEANING	1	1	1	11
◉	2A120050	GEAR,HEAT ROLLER	1	1	1	12
◉	2A120060	BUSHING,HEAT ROLLER	2	2	2	12
◉	2A120071	SEPARATION CLAW,HEAT ROLLER	4	4	4	12
◉	2A120080	THERMISTOR,FIXING	1	1	1	12
	2A120090	RIGHT HOUSING,FIXING	1	1	1	12
	2A120100	LEFT HOUSING,FIXING	1	1	1	12
	2A120110	UPPER GUIDE,FIXING	1	1	1	12
	2A120120	LOWER GUIDE,FIXING	1	1	1	12
◉	2A120130	FRONT LEVER,FIXING PRESSURE RELEASE	1	1	1	12
◉	2A120140	REAR LEVER,FIXING PRESSURE RELEASE	1	1	1	12
	2A120150	FRONT SUPPORT PLATE,FIXING HEATER	1	1	1	12
	2A120160	REAR SUPPORT PLATE,FIXING HEATER	1	1	1	12
	2A120170	HOLDER,HEAT ROLLER	2	2	2	12
◉	2A120240	GEAR 44,FIXING IDLE	1	1	1	12
◉	2A120250	FRONT COVER,FIXING	1	1	1	12
◉	2A120260	SPRING,PRESS ROLLER	2	2	2	12
◉	2A121010	ROLLER,EJECT	1	1	1	12
	2A121020	PLATE SPRING,EJECT	2	2	2	2
◉	2A121030	ACTUATOR,EJECT SWITCH	1	1	1	12
◉	2A121040	SPRING,EJECT SWITCH	1	1	1	12
◉	2A121050	STATIC ELIMINATOR,EJECT	1	1	1	2
	2A121060	GROUND PLATE,EJECT	1	1	1	2
◉	2A122020	GEAR 53,DRUM DRIVE	1	1	1	13
◉	2A122030	GEAR 28/20,COUPLER	1	1	1	13
◉	2A122040	GEAR 97/25	1	1	1	13
◉	2A122050	GEAR 67/30	1	1	1	13
	2A122060	GEAR 45/40	1	1	1	13
	2A122080	GEAR 26/20	1	1	1	13
◉	2A122100	COUPLING,DEVELOPING DRIVE	1	1	1	13
	2A122110	MOUNT,MACHINE DRIVE	1	1	1	13
	2A122120	MOUNT,PAPER FEED DRIVE	1	1	1	13
	2A122150	GEAR 23/16	1	1	1	13
	2A122160	GEAR 37/21	1	1	1	13
	2A122180	GEAR 32/18	1	1	1	13
	2A122190	SPRING,DRUM COUPLING	1	1	1	13
	2A122200	SPRING,DEVELOPING COUPLING	1	1	1	13
◉	2A123010	FAN,COOLING	1	1	1	14
◉	2A125021	SHEET A,OPERATION UNIT(INCH)	1			15
◉	2A125030	SHEET B,OPERATION UNIT	1	1	1	15

SP	Part. No.	Description	Quantity			Fig. No.
			120V	230V	240V	
◉	2A125040	SHEET,DUST SHIELD	1	1	1	15
◉	2A125050	LID,OPERATION UNIT	1	1	1	15
◉	2A125061	SHEET A,OPERATION UNIT(METRIC)		1		15
◉	2A125071	SHEET A,OPERATION UNIT(MAP)			1	15
	2A126010	MOUNT,MAIN PCB	1	1	1	14
	2A126020	SHIELD,PCB	1	1	1	14
	2A126030	SHIELD,MEMORY BOARD	1	1	1	14
	2A126060	GUIDE,MEMORY BOARD	1	1	1	14
	2A126070	GUIDE,NETWORK BOARD	1	1	1	14
	2A126080	GUIDE,PRINTER BOARD	1	1	1	14
	2A126090	GROUND PLATE,IMAGE FORMATION	1	1	1	2
	2A126130	PIN,OPTION	2	2	2	14
	2A126150	COVER PCB,SHIELD	1	1	1	14
	2A126160	MOUNT,POWER SOURCE PCB	1			14
◉	2A127010	LAMP,CLEANING	1	1	1	2
◉	2A127040	SWITCH,INTERLOCK	1	1	1	14
◉	2A127050	SWITCH,PHOTO INTERRUPTOR	6	6	6	5,7,12,14
	2A127060	INLET 3P,POWER SOURCE	1			14
◉	2A127070	SWITCH,MAIN	1			14
◉	2A127080	CLUTCH,REGISTRATION	1	1	1	13
	2A127500	WIRE,ISU	1	1	1	14
	2A127510	LEFT WIRE	1	1	1	14
	2A127521	FRONT WIRE	1	1	1	14
	2A127550	JUNCTION WIRING,EJECT SWITCH	1	1	1	12
	2A127601	WIRE,INLET(230)		1	1	14
	2A127780	WIRE,ISU	1	1	1	8
	2A127791	WIRE,INLET	1			14
	2A127800	WIRE,RELAY SHORT CIRCUIT	1	1	1	14
	2A127820	WIRE,FIXING HEATER	1	1	1	14
	2A127830	JUNCTION WIRING,REGISTRATION SW	1	1	1	14
	2A127850	JUNCTION WIRING,DEVELOPING	1	1	1	10
	2A127860	WIRE,LSU	1	1	1	9
	2A127890	TERMINAL,MAIN CHARGER JUNCTION	1	1	1	2
	2A127900	TERMINAL,GRID JUNCTION	1	1	1	2
	2A127910	TERMINAL,TRANSFER JUNCTION	1	1	1	2
◉	2A128020	INVERTER PCB	1	1	1	8
	2A128051	POWER SOURCE PCB 120	1			14
	2A128061	POWER SOURCE PCB 230		1	1	14
	2A160010	MEMORY PCB ASS'Y OP	1	1	1	16
◉	2A168010	MAIN CHARGER ASS'Y	1	1	1	11

• Parts with "◉" indicates the Service parts.

SP	Part. No.	Description	Quantity			Fig. No.
			120V	230V	240V	
◉	2A168034	TRANSFER ROLLER ASS'Y	1			4
◉	2A168041	LSU ASS'Y	1	1	1	9
◉	2A168050	IC,ROM MAIN PCB	1	1	1	16
◉	2A168064	TRANSFER ROLLER ASS'Y(METRIC)		1	1	4
◉	2A168070	SHEET,SCANNER ADJUSTMENT	1	1	1	16
◉	2A168080	SPECIAL TOOL,FRAME RETAINING	1	1	1	16
	2A173800	TONER DISPOSAL TANK ASS'Y	1	1	1	16
	2A173810	TANK,TONER DISPOSAL	1	1	1	16
	2A173820	SHIELD,TONER DISPOSAL TANK	1	1	1	16
	2A173830	TAPE,TONER DISPOSAL TANK	1	1	1	16
◉	2A182010	SET,DRUM(NEUTRAL)	1	1	1	11
◉	2A193010	PARTS,POWER SOURCE ASS'Y 120(SP)	1			14
◉	2A193020	PARTS,POWER SOURCE ASS'Y 230(SP)		1	1	14
◉	2A193030	PARTS,LAMP SCANNER(SP)	1	1	1	8
◉	2A193040	PARTS,BLADE CLEANING LOWER(SP)	1	1	1	11
◉	2A193050	PARTS,BLADE CLEANING B(SP)	1	1	1	11
◉	2A193060	PARTS,ROLLER HEAT(SP)	1	1	1	12
◉	2A193070	PARTS,ROLLER PRESS(SP)	1	1	1	12
◉	2A193080	PARTS,HEATER FIXING 120(SP)	1			12
◉	2A193090	PARTS,HEATER FIXING 240(SP)		1	1	12
◉	2A193100	PARTS,MOTOR MAIN(SP)	1	1	1	13
◉	2A193110	PARTS,MOTOR ISU(SP)	1	1	1	8
◉	2A193120	PARTS,PCB HIGH VOLTAGE(SP)	1	1	1	14
◉	2A193130	PARTS,PCB OPERATION UNIT(SP)	1	1	1	15
◉	2A201010	MEMORY PCB ASS'Y	2	2	2	14,16
◉	2A201020	MAIN PCB ASS'Y		1	1	14
◉	2A201030	MAIN PCB ASS'Y(F C C)	1			14
◉	2A204012	FRONT COVER	1	1	1	1
◉	2A204021	REAR COVER	1	1	1	1
	2A226010	MOUNT,MEMORY BOARD	2	2	2	14,16
	2A228010	MEMORY PCB	2	2	2	14,16
◉	2A228020	IC DIMM	2	2	2	14,16
◉	2A327010	SENSOR,HUMIDITY	1	1	1	14
	2A806030	BUSH FEED	4	4	4	2,12
	2A806250	RING STOPPER	3	4	3	2,8,10,13
◉	2A806720	GEAR MPF	1	1	1	4
	2A807050	GEAR CASSETTE	1	1	1	6
	28107301	PRESSING SPRING	2	2	2	7
◉	28107400	BEARING,688ZZNR	2	2	2	8
◉	29806560	BUSHING 6	3	3	3	6,7
	29806710	PULLEY,RELEASE LEVER	2	2	2	6
◉	29806810	BUSHING,6 REGISTRATION	3	3	3	6,7
◉	29812291	CUSHION,CONTACT GLASS	9	9	9	8
	29822230	GEAR 16T,PF IDLE	1	1	1	13
	29822280	SPRING,PF COUPLER	1	1	1	6
◉	3AL05120	LABEL,DF ORIGINAL CAUTION	1	1	1	6
	3AL06090	CUSHION,ORIGINAL GUIDE	2	2	2	6
◉	3AL07250	REAR STATIC ELIMINATOR,PAPER FEED	1	1	1	7
	3AL08170	PULLEY,EJECT	2	2	2	6
	3A707020	PULLEY,PAPER FEED	1	1	1	7
◉	3A707030	PULLEY,LEADING FEED	1	1	1	6
	3A707060	SHAFT,LEADING FEED	1	1	1	6
	3A707070	SHAFT,SEPARATION	1	1	1	7
	3A707090	HOLDER,SEPARATION PULLEY	2	2	2	7
	3A707110	GEAR 30,PAPER FEED	1	1	1	6
◉	3A707120	PULLEY,LEADING FEED	1	1	1	6
	3A722040	PULLEY 24,CONVEYING	2	2	2	7
◉	3A722090	PULLEY,DRIVE	2	2	2	5,7
◉	3BC07130	ONE-WAY CLUTCH 6	1	1	1	6
	3BH26030	PIN,OPTION	2	2	2	14
◉	3BP11070	COVER,ADF	1	1	1	5
◉	3BP11080	HOUSING,CONVEYING	1	1	1	5
◉	3BP11090	GUIDE,ORIGINAL	1	1	1	5
◉	3BP11100	ROLLER,CONVEYING	1	1	1	5
◉	3BP11110	ROLLER,EJECT	1	1	1	5
	3BP11120	MOUNT,DRIVE	1	1	1	5
◉	3BP11130	GEAR 25/19	1	1	1	5
◉	3BP11140	SPRING,CONVEYING	4	4	4	5
◉	3BP11150	MAT,ORIGINAL HOLDER	2	2	2	5,6
◉	3BP11160	UPPER HINGE	2	2	2	5
◉	3BP11170	LOWER HINGE	2	2	2	5
◉	3BP11180	ACTUATOR,ORIGINAL DETECTION	1	1	1	5
◉	3BP11190	ACTUATOR,TIMING DETECTION	1	1	1	5
◉	3BP11220	SPRING,ORIGINAL GUIDE	2	2	2	5
	3BP11230	WIRE,ADF	1	1	1	5
◉	3BP11240	FRONT FILM,CONVEYING	1	1	1	5
◉	3BP11250	REAR FILM,CONVEYING	1	1	1	5
	3BP11270	SHAFT,HINGE	2	2	2	5
◉	3BP11280	PULLEY 22,CONVEYING	2	2	2	5
◉	3BP11290	GEAR 20,CONVEYING	1	1	1	5

• Parts with "◉" indicates the Service parts.

SP	Part. No.	Description	Quantity			Fig. No.
			120V	230V	240V	
◉	3BP11300	SHEET,READING	2	2	2	5,7
	3BP11310	TRAY,EJECT	1	1	1	5
◉	3BP11320	MOUNT,PULLEY	1	1	1	5
	3BP11330	RETAINER,TENSION	1	1	1	5
◉	3BR02010	BASE,ADF	1	1	1	6
	3BR02020	FRAME,ADF	1	1	1	6
	3BR02030	STAY,ADF	1	1	1	6
	3BR02060	LEVER,RELEASE SWITCH	1	1	1	6
	3BR02080	MOUNT,RELEASE SWITCH	1	1	1	7
	3BR03010	LEFT HINGE	1	1	1	6
	3BR03040	RIGHT HINGE	1	1	1	6
◉	3BR04010	LOWER COVER,CONVEYING	1	1	1	6
◉	3BR04020	HANDLE,ADF	1	1	1	6
	3BR05010	LABEL,ORIGINAL UPPER LIMIT	1	1	1	6
◉	3BR06010	TABLE,ADF	1	1	1	6
◉	3BR06020	FRONT CURSOR	1	1	1	6
◉	3BR06030	REAR CURSOR	1	1	1	6
◉	3BR06040	COVER,TABLE	1	1	1	6
◉	3BR07010	COVER,PAPER FEED	1	1	1	6
◉	3BR07020	UPPER ROLLER,REGISTRATION	1	1	1	7
	3BR07030	LOWER ROLLER,REGISTRATION	1	1	1	7
◉	3BR07040	PULLEY,PAPER FEED	1	1	1	6
	3BR07050	GUIDE,LIFT	1	1	1	7
	3BR07060	GUIDE,PAPER FEED	1	1	1	7
◉	3BR07070	SHAFT,PAPER FEED	1	1	1	6
	3BR07080	SHAFT,LIFT	1	1	1	7
◉	3BR07110	ACTUATOR,ORIGINAL DETECTION	1	1	1	6
	3BR07120	LEVER,LIFT	1	1	1	7
◉	3BR07130	BELT 114,PAPER FEED	1	1	1	6
	3BR07140	MOUNT,HANDLE	1	1	1	6
	3BR07150	FRONT HOOK,PAPER FEED COVER	1	1	1	6
	3BR07160	REAR HOOK,PAPER FEED COVER	1	1	1	6
◉	3BR07170	HANDLE,PAPER FEED COVER	1	1	1	6
	3BR07180	SPRING,SEPARATION PULLEY	2	2	2	7
	3BR07190	MOUNT,TIMING SWITCH	1	1	1	7
◉	3BR07200	ACTUATOR,TIMING SWITCH	1	1	1	7
	3BR07210	MOUNT,SEPARATION PULLEY	1	1	1	7
	3BR07220	FRONT SUPPORT PLATE,PAPER FEED COVER	1	1	1	6
	3BR07230	REAR SUPPORT PLATE,PAPER FEED COVER	1	1	1	6
	3BR07240	GROUND PLATE,SEPARATION PULLEY	1	1	1	7
	3BR07260	UPPER FILM,CONVEYING	1	1	1	6
◉	3BR07270	PAD,LIFT	1	1	1	7
	3BR07280	FILM,LIFT	1	1	1	7
	3BR07290	SHAFT,	1	1	1	6
	3BR07310	FRONT PLATE SPRING,SEPARATION	1	1	1	7
	3BR07320	FRONT PAD,SEPARATION	1	1	1	7
	3BR07330	FRONT FILM,SEPARATION	1	1	1	7
	3BR07350	FRONT FILM,PAD SEPARATION	1	1	1	7
	3BR07360	SPRING,LIFT	1	1	1	7
	3BR08010	STAY,CONVEYING	1	1	1	7
	3BR08020	GUIDE,CONVEYING	1	1	1	7
	3BR08030	GUIDE,READING	1	1	1	7
	3BR08040	SPRING,READING	2	2	2	7
	3BR08050	FILM A,CONVEYING	3	3	3	7
	3BR08060	FILM B,CONVEYING	2	2	2	7
◉	3BR10010	UPPER ROLLER,EJECT	1	1	1	7
	3BR10030	UPPER GUIDE,EJECT	1	1	1	7
	3BR10040	LOWER GUIDE,EJECT	1	1	1	7
	3BR10050	FILM,EJECT	1	1	1	7
	3BR10060	PULLEY,FEED	2	2	2	7
	3BR10070	PLATE SPRING,EJECT PULLEY	1	1	1	7
	3BR10080	SHAFT,EJECT PULLEY	1	1	1	7
	3BR22010	MOUNT,ADF MOTOR	1	1	1	7
	3BR22020	GEAR 42/20,PAPER FEED	1	1	1	7
	3BR22030	CAM,LIFT	1	1	1	7
◉	3BR22040	BELT 192,CONVEYING	2	2	2	5,7
	3BR22060	GEAR 38,LIFT	1	1	1	7
	3BR22070	GEAR,DRIVE ADF	1	1	1	7
◉	3BR22080	SQUARE SPRING,CAM	1	1	1	7
	3BR22090	TENSION PLATE B,DRIVE	1	1	1	7
	3BR27010	WIRE,ADF	1	1	1	7
◉	3BR27020	MOTOR,ADF	1	1	1	7
◉	33906070	TORQUE LIMITER,PAPER FEED	1	1	1	7
	33912150	PULLEY,WIRE	2	2	2	8
◉	33914190	TONER SENSOR	1	1	1	10
◉	33915190	TONER MOTOR	1	1	1	13
	33927580	CORE 9-20X32	1	1	1	9
	34806140	STOPPER 4	1	1	1	5
	34806150	STOPPER 5	27	34	27	2,6,7,8, 10,13

• Parts with "◉" indicates the Service parts.

SP	Part. No.	Description	Quantity			Fig. No.
			120V	230V	240V	
	34806480	STOPPER 6	4	4	4	2
◉	34906150	INNER BUSHING,PAPER FEED	1	1	1	2
◉	34906160	OUTER BUSHING,PAPER FEED	1	1	1	2
◉	34907021	FRONT CURSOR,CASSETTE	1	1	1	3
◉	34907031	REAR CURSOR,CASSETTE	1	1	1	3
◉	34907050	REAR CLAW,CASSETTE	1	1	1	3
	34907060	LEVER,CURSOR RETAINING	1	1	1	3
	34907070	PIN,CLAW CASSETTE	4	4	4	3,6
◉	34907131	REAR STOPPER,PAPER	1	1	1	3
	34907141	GEAR 18,CASSETTE	1	1	1	3
	34907290	PULLEY,GUIDE	2	2	2	2
	34907330	LABEL,PAPER UPPER LIMIT	1	1	1	3
◉	34917170	PULLEY,TRANSFER HOLDER	4	4	4	5
◉	34918090	GEAR 19,DISPOSAL	1	1	1	11
	34922570	GEAR 23,DEVELOPING	1	1	1	13
	35320300	SPRING,EJECT ACTUATOR	1	1	1	7
	35322020	GEAR 20,PAPER FEED DRIVE	2	2	2	7
◉	35322190	GEAR 28,FIXING COUPLER	1	1	1	13
	35322200	COUPLER,FIXING DRIVE	1	1	1	13
	35322210	SPRING,FIXING COUPLER	1	1	1	13
◉	35327400	SWITCH,FEED	2	2	2	8
◉	35411070	GEAR 21,IDLE	2	2	2	8
	35904270	HOOK,CONVEYING HANDLE	2	2	2	4
◉	35911790	GEAR 20,PAPER FEED PULLEY	1	1	1	7
	35912060	PULLEY,SCANNER DRUM	2	2	2	8
	35912210	SPRING,MIRROR HOLDER	6	6	6	8
◉	35927420	SWITCH,SIZE	1	1	1	14
◉	35968010	FLASH JIG PCB	1	1	1	16
	36211500	GEAR,LEADING FEED JOINT	1	1	1	6
◉	36220210	LEFT THERMOSTAT,FIXING	1	1	1	12
	36505111	LABEL,TONER DISPOSAL TANK	1	1	1	16
◉	45592554	BEARING 688ADD	1	1	1	10
	48128609	PIN,UPPER FRONT COVER	1	1	1	6
	48129208	PIN,TENSION	1	1	1	5
◉	49028113	BUSHING 6-19,DEV.UNIT	1	1	1	10
	49628105	RECEIVER,MAGNET	2	2	2	1
◉	62227070	SOLENOID B,FEED SHIFT	1	1	1	8
	63127120	NOISE FILTER,10A		1	1	14
	63511220	STOP RING,4	1	1	1	14
◉	63527020	SAFETY,SWITCH	1	1	1	7

SP	Part. No.	Description	Quantity			Fig. No.
			120V	230V	240V	
◉	63820190	BEARING, FIXING UNIT	2	2	2	12
	63822220	GEAR,41	1	1	1	13
	65011310	GEAR 20,IDLE	1	1	1	7
	65014160	RIGHT GEAR 25,TONER SUPPLY	1	1	1	12
	65016080	STOP RING E3	9	9	9	5,6,12
	65027470	CORE,7-15X18	2	2	2	8,14
	65902670	CUSHION RUBBER	4	4	4	2
◉	66006840	BUSHING 4	4	4	4	5
◉	67322230	BUSHING 8	2	2	2	2
◉	68720160	PULLEY,FEED SHIFT	2	2	2	2
	68721640	PULLEY 20,DUPLEX CONVEYING	1	1	1	6
	68802070	SPRING A,LIFT UP	1	1	1	3
	68820280	HOLDER,BEARING	2	2	2	12
	71804400	MAGNET,LOWER FRONT COVER	2	2	2	1,13
◉	72107160	BUSHING 6,LOWER REGISTRATION ROLLER	2	2	2	7
	73818100	SPRING, BLADE THRUST	2	2	2	13
	74808080	BEARING,686ZZNR	2	2	2	7
◉	75720240	SPRING SEPARATION CLAW	4	4	4	12
	76508130	SPRING BELT GUIDE ROLLER	1	1	1	3
	78620710	CLAW STOPPER	3	3	3	6
	B4303080	TRIPLE SCREW M3X8(BLACK)	1	1	1	8
	C2804100	POLYESTER SLIDER WASHER 4.1X10X0.5T	5	5	5	6
	J7330120	PLUG,9715B-12A(IRS)	1	1	1	2
	L0223130	ROUND TYPE TERMINAL,M4,LRT-51T-4FE		1	1	14
	M1203200	OPEN BUSHING,OCB-375	1	1	1	7
◉	M1651000	FUSE,250V 1,25A MINI 239	1	1	1	8
◉	M1655030	FUSE,237005(LITTEL)	1			14
◉	M1661000	FUSE 15A,314015	1			14
◉	M1753010	FUSE,S506-3,15A(BUSSMANN)		1	1	14
◉	M1756010	FUSE,S506-6,3A(BUSSMANN)		1	1	14
	M2105010	NYLON CLAMP 3N,NK-3N	1	1	1	6
	M2105020	NYLON CLAMP 4N,NK-4N	2	2	2	5,8
	M2105720	MINIATURE CLAMP,UAMS-05-2	1	1	1	7
	M2107120	BINDING BAND SG-130	1	1	1	7
	M2607010	BINDING BAND,PLT1M	1	1	1	14
◉	NAS09010	BACKUP RAM M48Z35Y-70PC	1	1	1	16

• Parts with "◉" indicates the Service parts.

CLASSIFICATION OF THE SCREWS IN ILLUSTRATION

REF.	ITEM #	DESCRIPTION
BBB	B1303050	BINDING SCREW BVM3X5 (BLACK)
BBK	B1303060	BINDING SCREW BVM3X6 (BLACK)
BEA	B1603050	BINDING SCREW M3X5 (BRASS,NI)
BHI	B3313080	BINDING TAP-TITE SCREW M3X08
BIA	B8024350	BINDING TAP-TIGHT B SCREW M4X35
BIB	B3310100	+BINDING TAP-TIGHT P BRONZE SCREW M2.3X10
BMF	B1003140	BINDING SCREW CVM3X14
BVV	B1324080	BINDING SCREW WITH SW (BLACK) M4X8
CIB	B8073080	FLAT HEAD TAP-TITE P SCREW M3X08
DJW	B5393030	W-POINT SET SCREW M3X3
E03	D1000300	STOP RING (E-3)
E05	D1000500	STOP RING (E-5)
E07	D1000700	STOP RING (E-7)
GEA	B9604080	GROUNDING SCREW M4X8 (BRASS,N;)
HAD	B4003050	TRIPLE SCREW M3X05
HAO	B4043080	TRIPLE TAP-TITE P SCREW M3X08
HAQ	B4043100	TRIPLE TAP-TITE P SCREW M3X10

REF.	ITEM #	DESCRIPTION
HAT	B4144080	+TP TAP-TITE P SCREW(CHROMIUM)
HAU	B4043080	TRIPLE TAP-TITE P SCREW M3X08
HBH	B4303060	TRIPLE SCREW M3X6 (BLACK)
HBI	B4303080	TRIPLE SCREW M3X8(BLACK)
HCB	B4103050	TRIPLE SCREW M3X05(CHROMIUM)
HCJ	B4104100	TRIPLE SCREW M4X10(CHROMIUM)
HCL	B4103060	TRIPLE SCREW M3X06(CHROMIUM)
HDB	B4343080	TRIPLE TAP-TITE P SCREW M3X08(BLACK)
HDC	B4344080	TRIPLE TAP-TITE P SCREW M4X08(BLACK)
HDG	B4343100	TRIPLE TAP-TITE P SCREW M3X10(BLACK)
KAK	E0020080	SPRING PIN 2X8
KAL	E0020100	SPRING PIN 2X10
KAM	E0020120	SPRING PIN 2X12
KKG	E0030160	SPRING PIN 3X16
NBA	C1303000	NUT M3 (BLACK)
WAD	C2005120	PLAIN WASHER PWM5

KYOCERA MITA EUROPE B.V.
Hoeksteen 40, 2132 MS Hoofddorp,
The Netherlands
Phone: (020) 6540000
Home page: http://www.kyoceramita-europe.com
Email: info@kyoceramita-europe.nl

KYOCERA MITA NEDERLAND B.V.
Hoeksteen 40, 2132 MS Hoofddorp,
The Netherlands
Phone: (020) 5877200

KYOCERA MITA (UK) LIMITED
8 Beacontree Plaza
Gillette Way,
Reading RG2 0BS UK
Phone: (0118) 931 1500

KYOCERA MITA ITALIA S.P.A.
Via Marconi 8, 20041 Agrate Brianza,
Milano, Italy
Phone: (039) 65641

S.A. KYOCERA MITA BELGIUM N.V.
Hermesstraat 8A 1930 Zaventem, Belgium
Phone: (02) 7209270

KYOCERA MITA FRANCE S.A.
Parc les Algorithmes
SAINT AUBIN
91194 GIF-SUR-YVETTE
France
Phone: (01) 69852600

KYOCERA MITA ESPAÑA S.A.
Edificio Mita, Avda. De Manacor Nº 2,
Urb. Parque Rozas, Apartado De Correos 76,
28230 Las Rozas, Madrid, Spain
Phone: 34-91-631-8392

KYOCERA MITA FINLAND OY
Kirvesmiehenkatu 4, 00810 Helsinki,
Finland
Phone: (09) 478 05200

KYOCERA MITA (SCHWEIZ) AG
Hölzliwisen Industriestrasse 28,
8604 Volketswil, Switzerland
Phone: (01) 9084949

KYOCERA MITA DEUTSCHLAND GMBH
Industriestrasse 17, D-61449 Steinbach/TS,
Germany
Phone: (06171) 7005-0

KYOCERA MITA GMBH AUSTRIA
Eduard Kittenberger Gasse 95
A-1230 Wien, Austria
Phone: (01) 86338 210

KYOCERA MITA SVENSKA AB
Siktgatan 2
162 26 Vällingby, Sweden
Phone: (08) 4719999

KYOCERA MITA DANMARK A/S
Industrivej 11, DK-4632 Bjæverskov,
Denmark
Phone: 56871100

KYOCERA MITA PORTUGAL LDA.
CASCAISTOCK-Armazem nº8,
Rua das Fisgas, Alcoitão,
2765 Estoril, Portugal
Phone: 1-4602221

KYOCERA MITA SOUTH AFRICA (PTY) LTD.
Unit 3, "KYALAMI CRESCENT",
KYALAMI BUSINESS PARK,
1685 Midrand, South Africa
Phone: (011) 4663290

KYOCERA MITA AMERICA, INC.
Headquarters:
225 Sand Road, P.O. Box 40008
Fairfield, New Jersey 07004-0008
U.S.A.
Phone: (973) 808-8444

KYOCERA MITA ASIA OCEANIA SALES DIVISION
2-28, 1-chome, Tamatsukuri, Chuo-ku,
Osaka 540-8585, Japan
Phone: (06) 6764-3668

KYOCERA MITA AUSTRALIA PTY.LTD.
P.O. Box 211,
Regents Park Estate Unit 2,
Block V 391 Park Road,
Regents Park N.S.W. 2143, Australia
Phone: 61-2-9645-5100

KYOCERA MITA NEW ZEALAND LTD.
5 Howe Street, Newton, Auckland 1,
P.O. Box 68343,
Auckland, New Zealand
Phone: (09) 377-2088

KYOCERA MITA (THAILAND) CORP., LTD.
9/209 Ratchada-Prachacheun Road,
Bang Sue, Bangkok 10800, Thailand
Phone: (02) 586-0333

KYOCERA MITA SINGAPORE PTE LTD.
121 Genting Lane, 3rd. Level,
Singapore 349572
Phone: 65-7418733

KYOCERA MITA HONG KONG LIMITED.
11/F., Mita Centre,
552-566 Castle Peak Road,
Tsuen Wan, New Territories,
Hong Kong
Phone: 852-2423-2163

KYOCERA MITA CORPORATION
2-28, 1-chome, Tamatsukuri, Chuo-ku,
Osaka 540-8585, Japan
Phone: (06) 6764-3555
Fax: (06) 6764-3981

© 2000 KYOCERA MITA CORPORATION

KYOCERA is a trademark of Kyocera Corporation

mita is a registered trademark of KYOCERA MITA CORPORATION

Printed in Holland