Handout

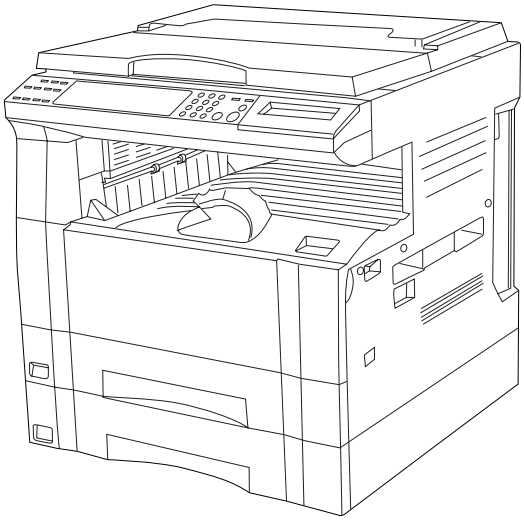

KM-1525/1530/2030

Original size	Maximum: A3
Copying sizes	Maximum: A3
	Minimum: A5, (A6R bypass)
Drawers	1 x 250 sheets (64 – 80 g/m^2) 15 ppm
	2 x 250 sheets (64 – 80 g/m^2) 20 ppm
Bypass table	50 sheets (60 – 160 g/m^2)
	Special paper: tracing paper, transparencies and envelopes
Magnification ratios	50 – 200%
Copy speeds	
(100% / memory copy)	A4: 15/20 copies/min.
	A4R: 10/13 copies/min.
	A3: 8/10 copies/min.
Maintenance interval	100K copies
First copy time	5.5 sec.
Warm-up time	30 sec.
In preheat/energy saver mode	15 or 30 sec.
Continuous copying	1 – 250 sheets
Photoconductor	OPC 30 mm Emerald (100K)
Drum potential	+ 680V dark, + 130V exposed
Charging system	Scorotron (720V) (100K)

Exposure light sources	Fluorescent lamp / Laser diode	
Exposure scanning system	Scanner and CCD / Polygon mirror	
Resolution	600 X 600 dpi scan and print	
Developer	2-component	(100K)
Developing bias	+480V / -150V	
Toner system	Kit (11K for 6% A4)	
Transfer system	Transfer roller -35 µA DC	(200K)
Separation	Curvature	
Fixing system	Heat and press roller	(200K)
Heat source	Halogen heater (910 W)	
Control temperature	180 °C	
Cleaning system	Cleaning blade	(100K)
Bit map memory	17.1 MB (KM2030)	
Page memory	46.9 MB (KM2030) 250 pages A4 6%	

Options

KM 1525	Total counter		
KM 1530	Cassette	ST-12	3 x
	Memory board	MB-5A	32MB
		80 pages A4 6%	
	Size detection sensor		
KM 2030	Document feeder	SRDF-1(K)	
	Duplex unit	AD-61 (incl. job separator)	
		AD-62 for Finisher	
	Finisher	F-2205	
	Cassette	ST-12	2 x
	Fax system B		
	Fax page memory	8 MB	
	Scan system A		
KM 1530/2030	Document feeder	STDF-3	
	Job separator	J-1302	
	Original cover		
	Keycounter		
	Printing system K		
	Network board	NC-110	

Cross view

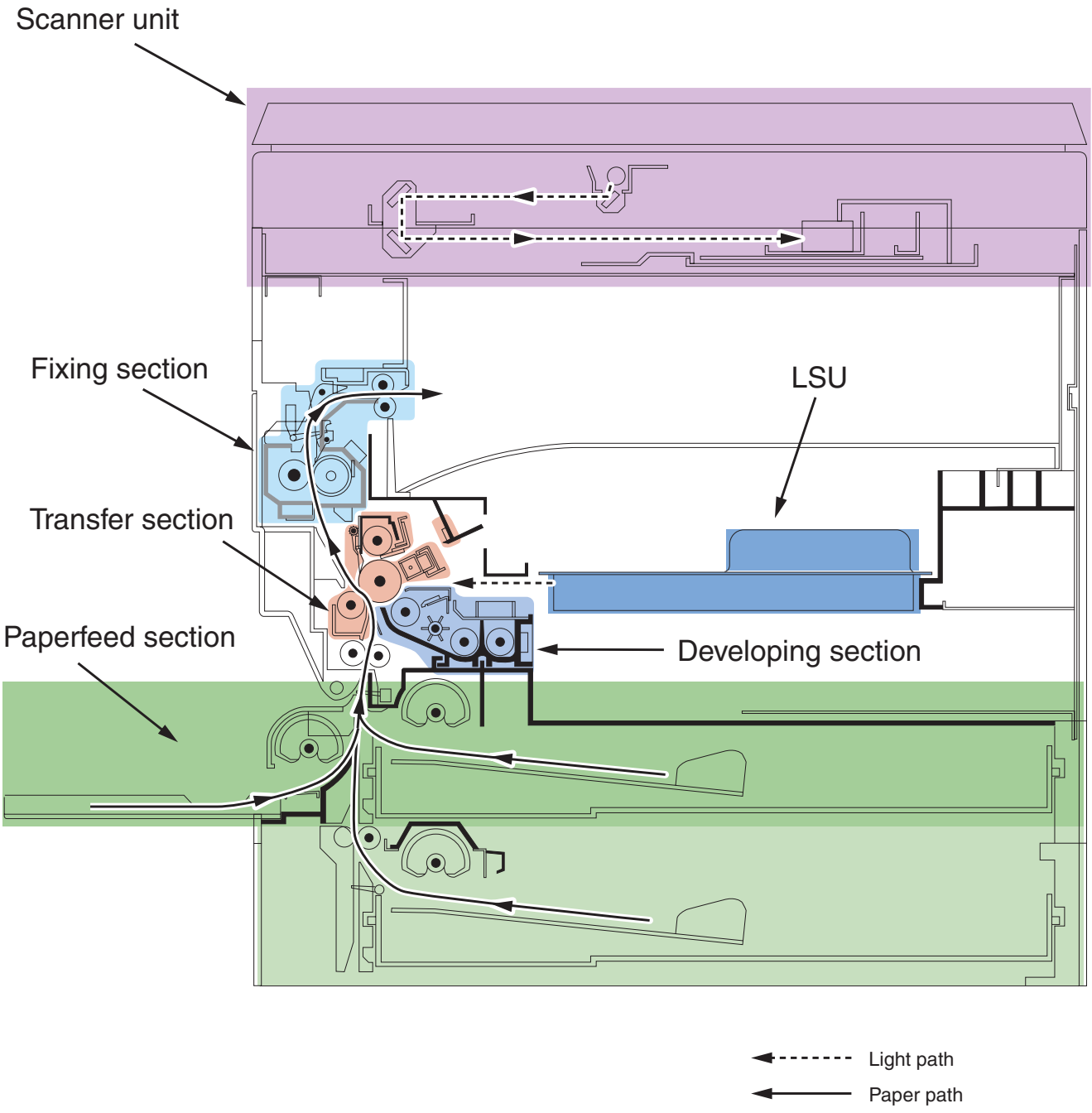
Scanner unit
Fixing section
LSU
Transfer section
Paperfeed section
Developing section
Light path
Paper path

Paper paths

Machine inside: 1-2	Copy, Fax, Print (max. 250 sheets)
Job separator: 1-3	Copy, Fax, Print (max. 100 sheets)
Duplex: 1-3-4	Copy, Fax, Print
Finisher: 1-3-5	Copy, Fax, Print 500 non-sort/ 250 sort/group

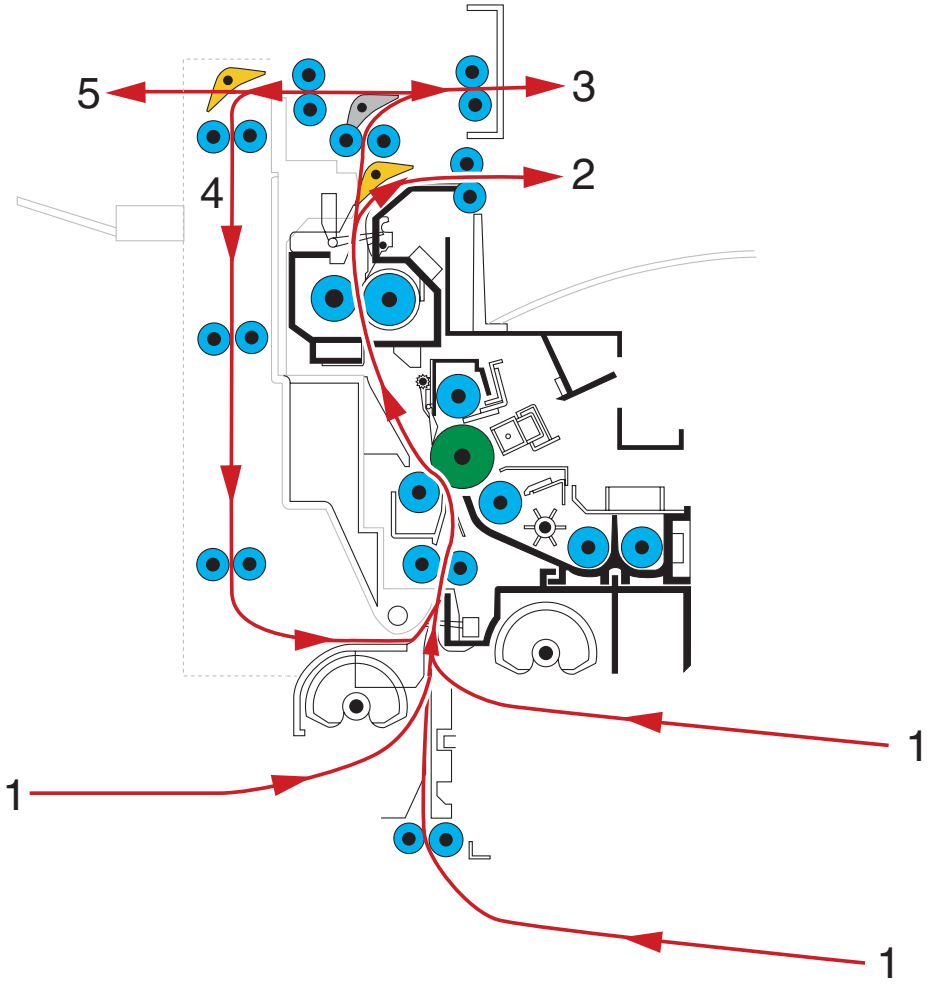

Option	Job Separation	Duplex	Staple
J-1302	Job Sep. / Mach. inner tray	NO	NO
AD-61 (incl. J-1302)	Job Sep. / Mach. inner tray	YES	NO
F-2205	Finisher / Mach. inner tray	NO	YES
F-2205 + AD-62	Finisher / Mach. inner tray	YES	YES

Cross view

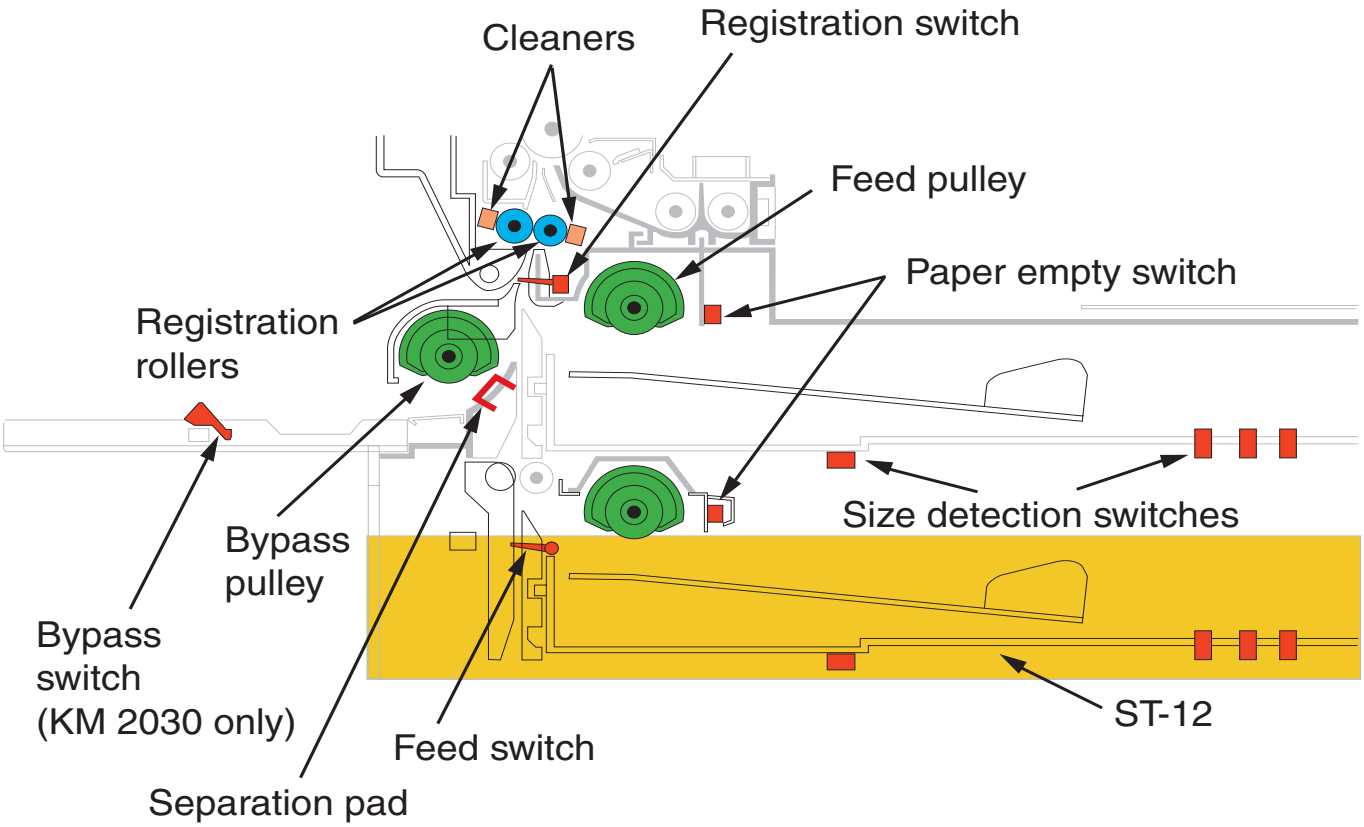

Block diagram

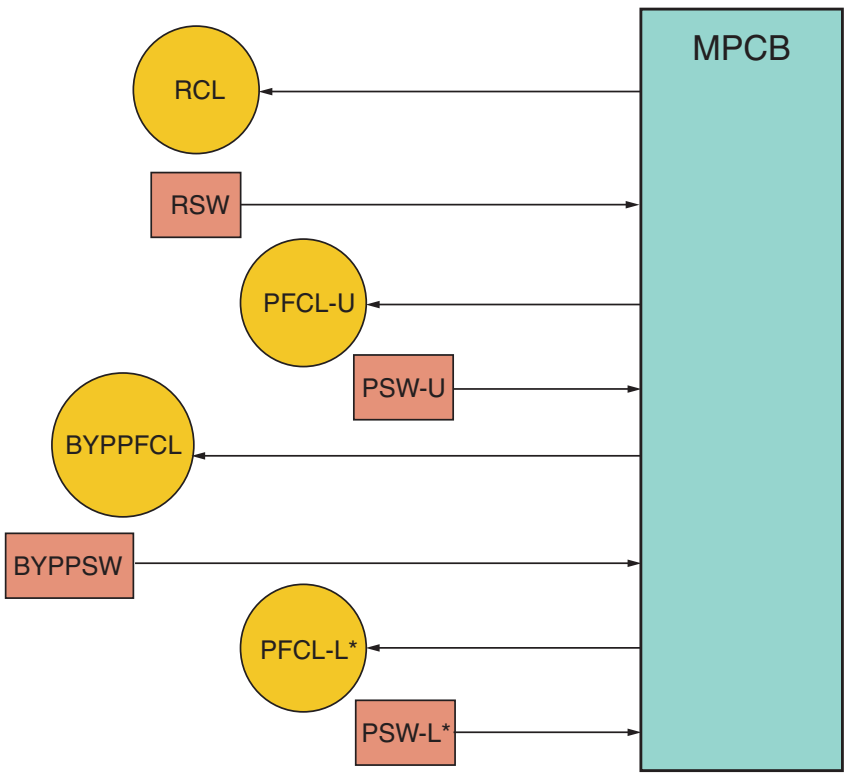

Crossview

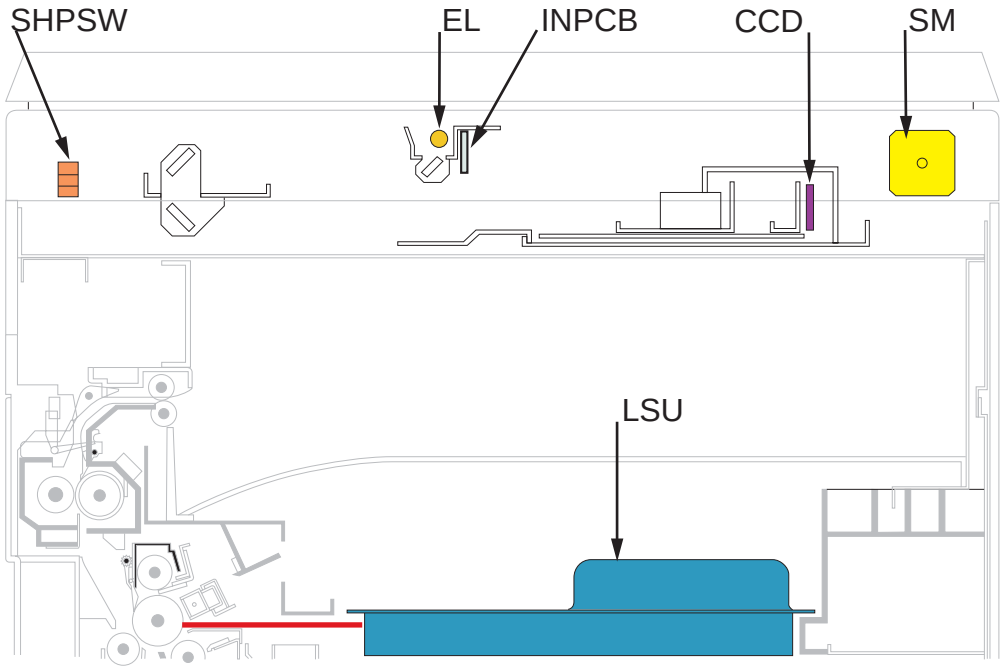

Block diagram

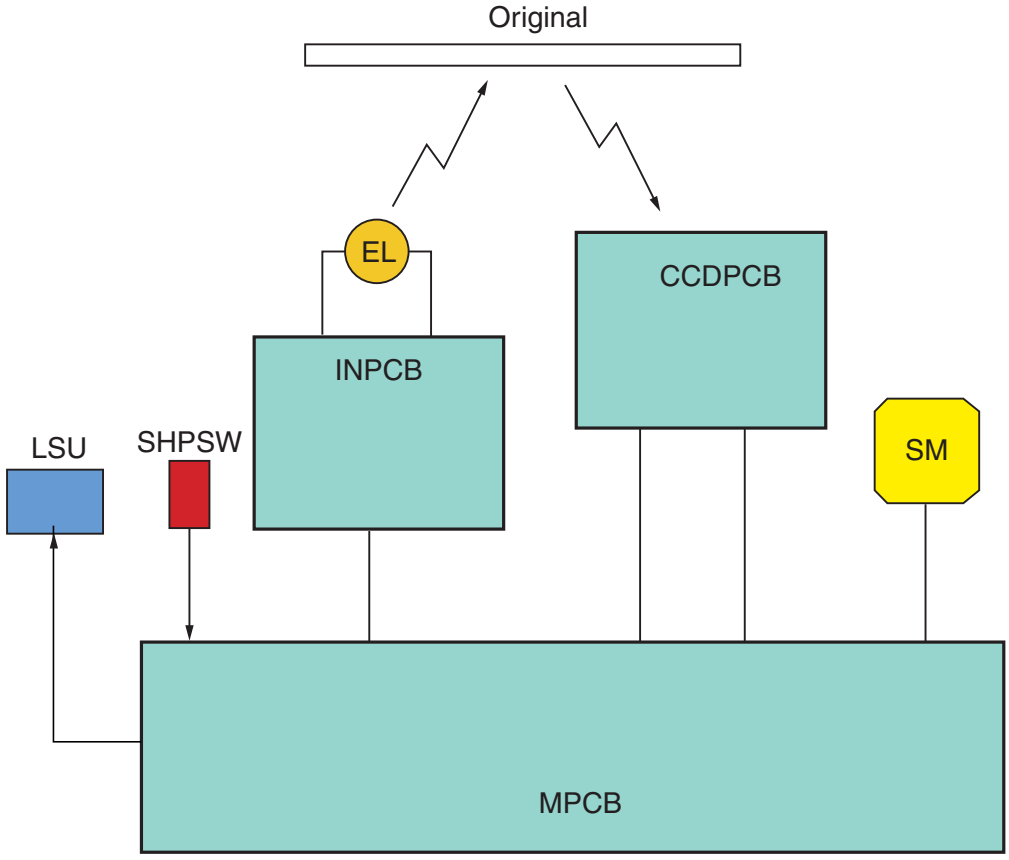

Crossview

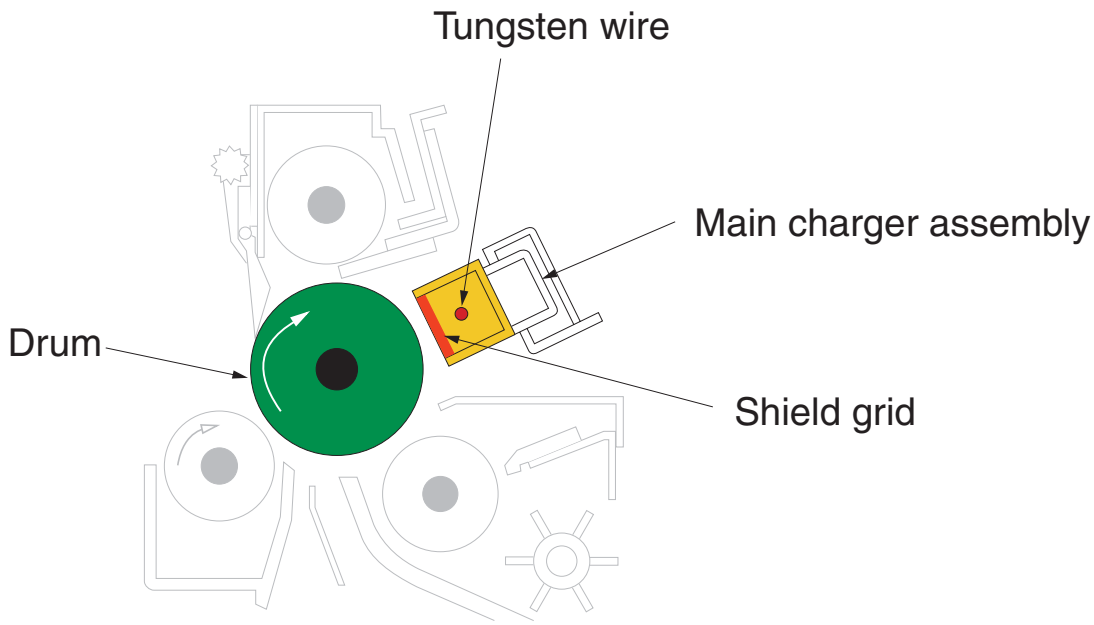

Block diagram

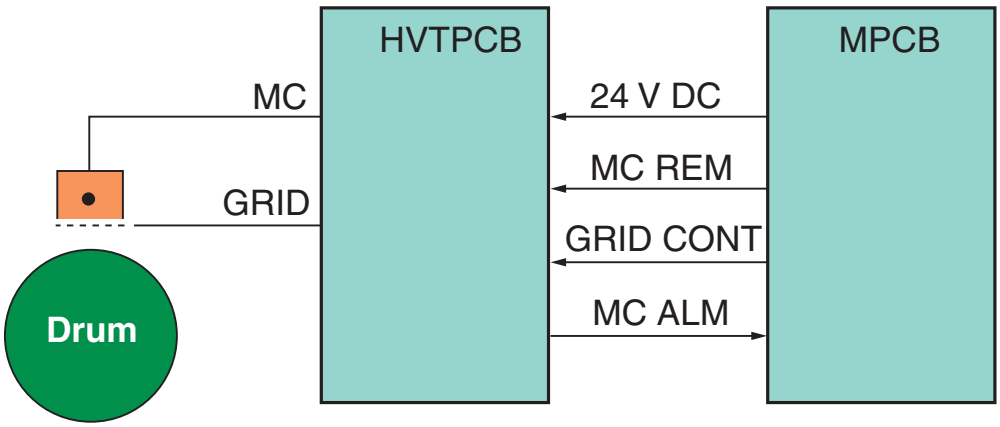

Crossview

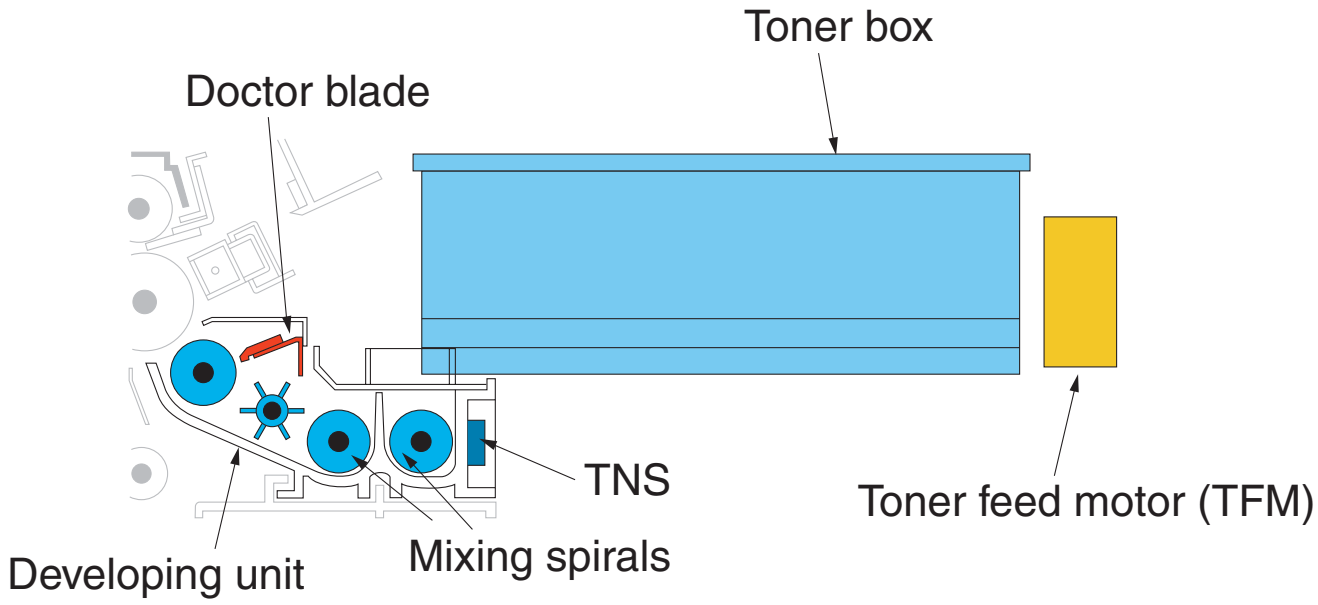

Block diagram

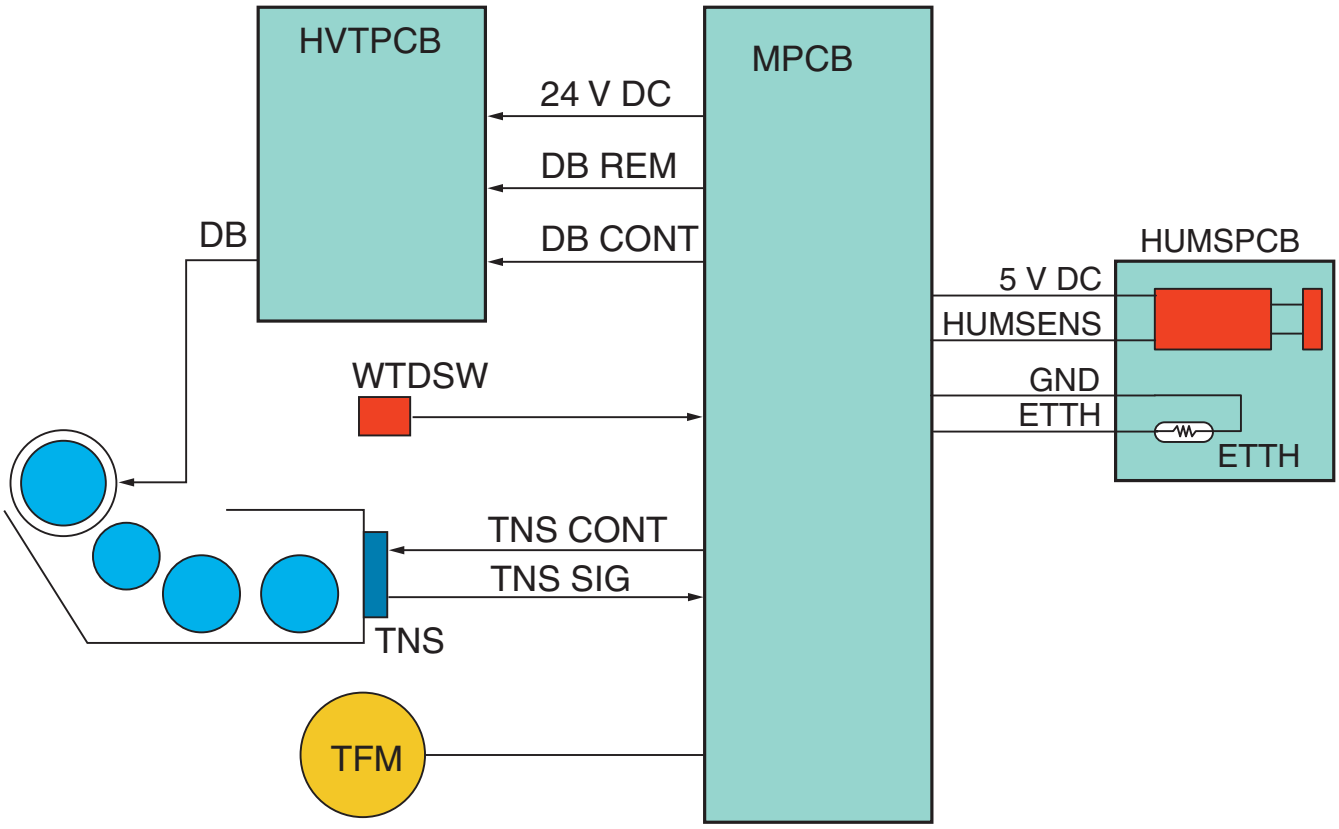

Toner flow

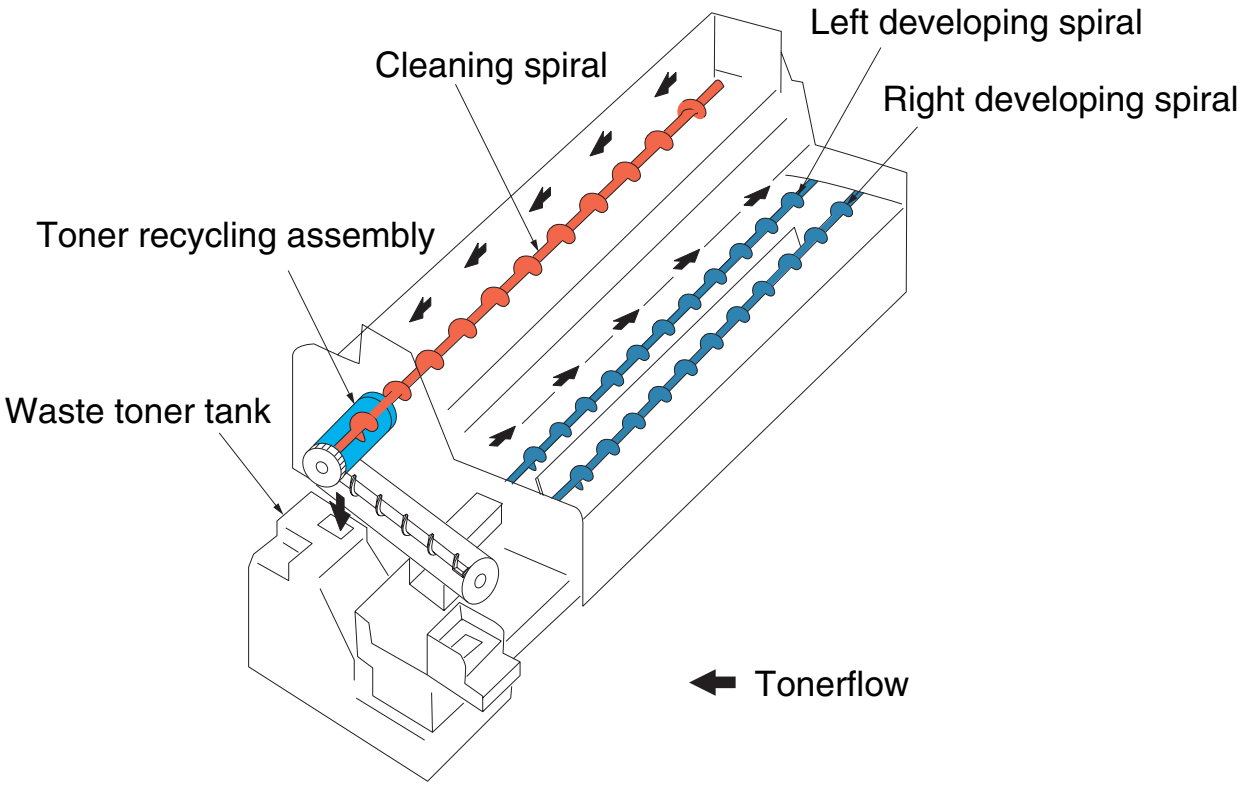

Toner density control

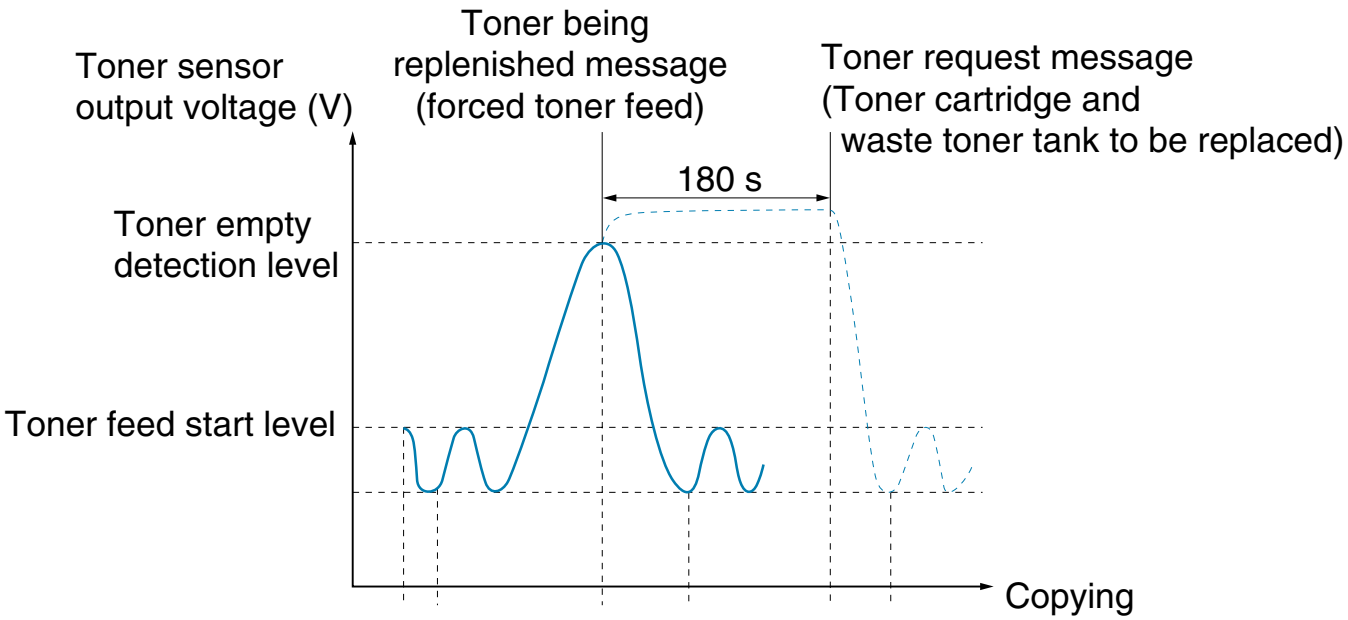

Crossview

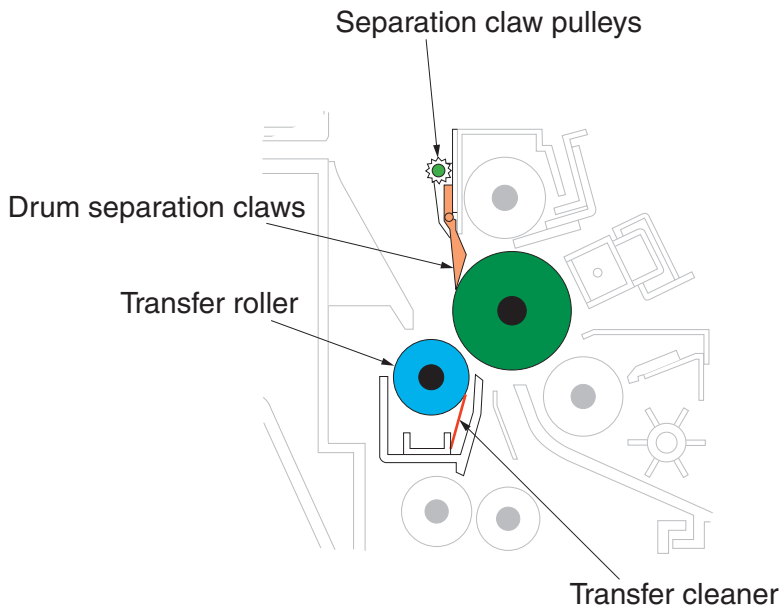

Block diagram

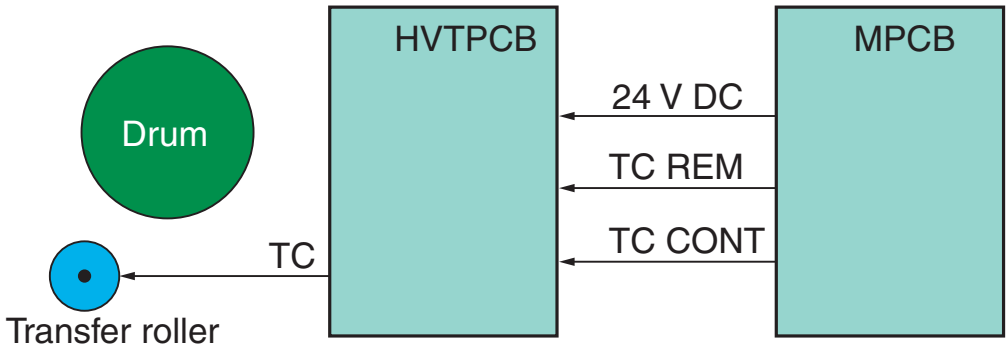

Transfer voltage adjustments (reference)

By U101 "high voltages setting" the following items can be set;

TC Data (Transfer control voltage)

TC Timing (Transfer voltage start timing)

Crossview

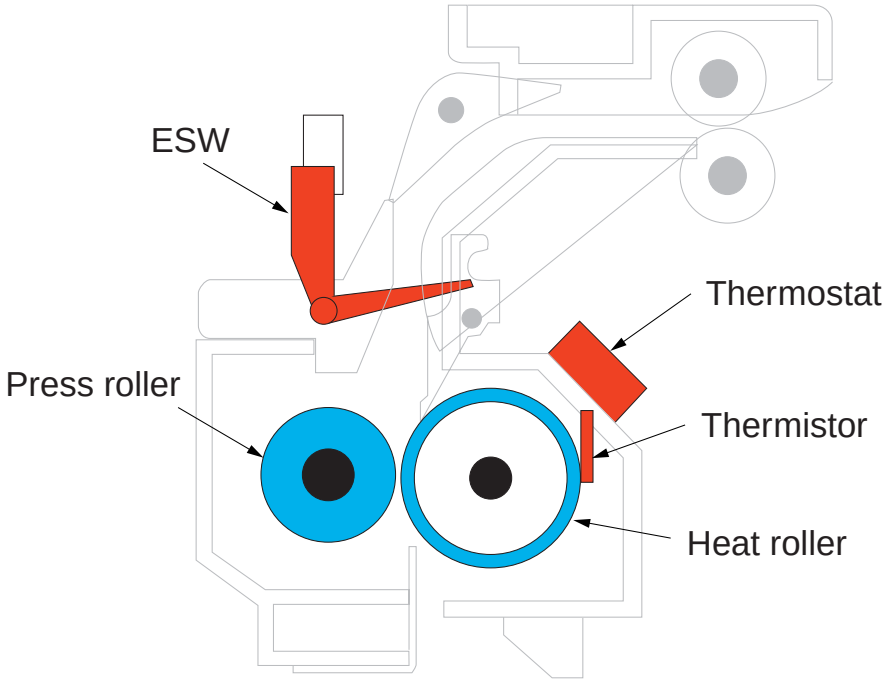

Block diagram

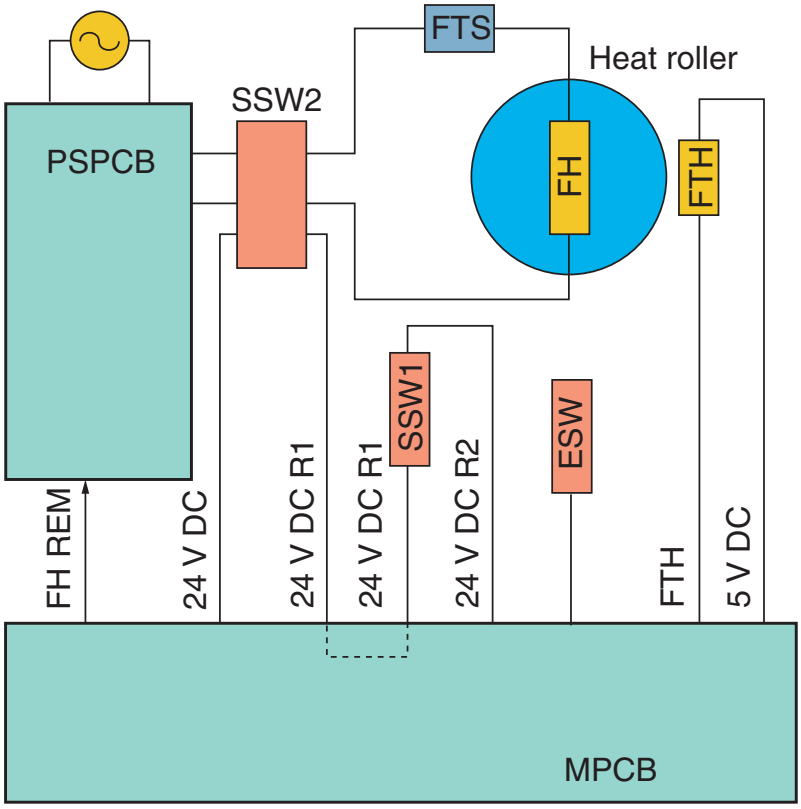

General

U000	Own-status report	
U001	Exiting the maintenance mode	
U003	Setting the service telephone number	(KM 2030)
U004	Setting the machine number	
U005	Copying without paper	
U019	Displaying the ROM version	(KM 2030)

Initialization

U020	Initializing all data (to default)	
U021	Initializing memories	
U022	Initializing backup data for optical section (U060, U099, U403, U404, U990)	
U203	Operating DF separately	(KM 1525 N.A.)
U204	Setting keycard or keycounter	(KM 1530/2030)
	Total Counter ON/OFF	(KM 1525)
U211	Setting DF type	(KM 2030)
U240	Checking operation of finisher motors and solenoids	(KM 2030)
U241	Checking finisher switches	(KM 2030)
U243	Checking operation of DF motors, solenoids and clutch	(KM 1525 N.A.)
U244	Checking DF switches	(KM 1525 N.A.)

Mode setting

U250	Setting the maintenance cycle	
U251	Checking/clearing the maintenance count	
U252	Setting the destination	
U265	Setting destination specifications	(KM 1525 N.A.)
U330	Setting number of sheets to enter stacking mode during sort operation	(KM 2030)
U332	Setting the size conversion factor	
U345	Setting value for maintenance due indication	

Others

U901	Checking/clearing print-out count by paper source	
U903	Checking/clearing jam counts	
U904	Checking/clearing service call counts	
U905	Checking/clearing counts by optional devices	(KM 1525 N.A.)
U906	Resetting partial operation control	
U908	Changing total counter value	(KM 2030)
U914	Switching between fax/copy modes	(KM 2030)
U990	Checking/clearing exposure lamp total on time (min.)	
U992	Checking/clearing printer/fax counts	
U993	Printing VTC test patterns PG1, PG2 and PG3	
U998	Outputting memory list	

This is not a complete list

Maintenance items Drive, paperfeed and cooling

U030 Checking motor operation

U031 Checking paper conveying switches

U032 Checking clutch operation

U033 Checking solenoid operation

U051 Adjusting the amount of slack in the paper:

Drawer

Bypass tray

Optional drawer

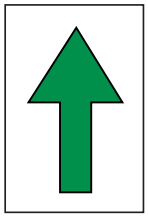

Original

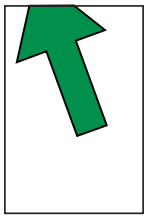

Copy example 1

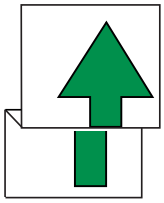

Copy example 2

Procedure KM 1525/1530

Text indicator on

Slack at paper registration roller

1 = upper drawer

2 = bypass tray

3 = lower drawer (optional)

Text and photo indicator on

Amount of slack at feed roller

1 = optional drawer 1

2 = optional drawer 2

Procedure KM 2030

Amount of slack in paper at registration roller

DECK: Upper drawer

BYPASS: Bypass tray

DECK2: Lower drawer

DUPLEX: Duplex copying (2nd face)

Amount of slack in paper at paper feed roller

3RD DECK: Optional drawer 1

4TH DECK: Optional drawer 2

Shading position correction

the scanner position for shading

can be corrected by U063

DF automatic scanner position adjustment (optional)

on/off and data setting; for line density

settings can be adjusted by U087

Maintenance items

Optical

U022	Initializing backup data for optical section (U060, U099, U403, U404, U990)	
U061	Turning exposure lamp on	
U073	Checking scanner operation	
U075	Setting original size detection	(KM 1530 only)
U091	Checking shading	

Doctor blade gap adjustment

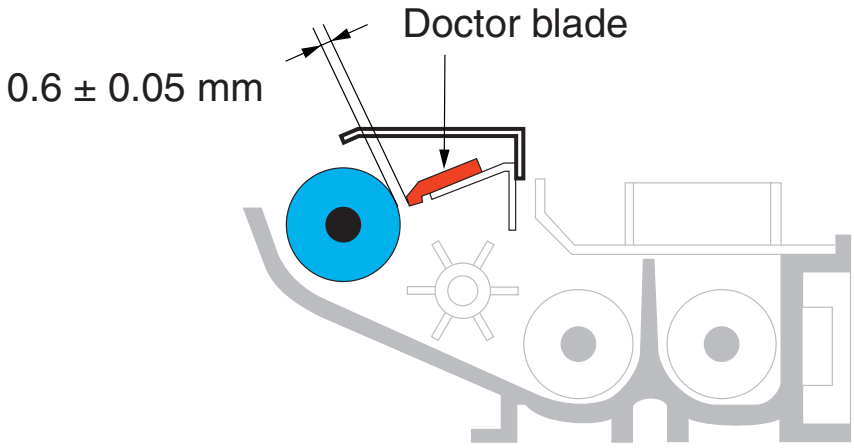

Developing bias adjustment (reference)

Developing bias voltage can be adjusted by U101:

Developing bias voltage ON

Developing bias data (dev. bias voltage during printing: 480V)

Developing bias data 2 (dev. bias voltage during non-printing: -150V)

Maintenance items

U131	Setting the toner sensor control voltage
U132	Adding toner
U135	Checking toner motor operation
U155	Displaying the toner sensor output
U156	Changing the toner motor on/off levels
U157	Checking/clearing developing drive time in minutes *
U158	Checking/clearing developing drive count in print-outs *

* (auto reset by U130)

Fixing temperature adjustment

Use U161 according to the table below:

Item	Range	Default
Primary stabilization fixing temperature *1st TEMP / LED 1*	115~145°C	135°C
Secondary stabilization fixing temperature *2nd TEMP / LED 2*	135~190°C	160°C
Regular stabilization control temperature *COPY TEMP / LED 3*	145~220°C	180°C
Temperature to be deducted when copying ≦ A4 *A4R TEMP / LED 4*	0~50°C	0°C

Maintenance items

U162 Stabilizing fixing forcibly

U196 Turning fixing heater on

U199 Checking fixing temperature

Main pcb replacement

- Run **U917** and set, if necessary, to **read**
- Remove, if present, the **memory board** and fit the **MPCB replacement tool** with the **NOVRAM** on it and switch the machine on until LED 1 is lit steady (approximately 10 seconds)
- Switch off the machine and change the MPCB's
- Upgrade the firmware
- Run the following maintenance modes; **U020** (full reset) and **U252** (destination setting)
- Set maintenance mode **U917** to **Write**
- Re-insert the **memory board** and switch the machine on, When the LED 1 lights steady after approximately 10 seconds the operation is completed

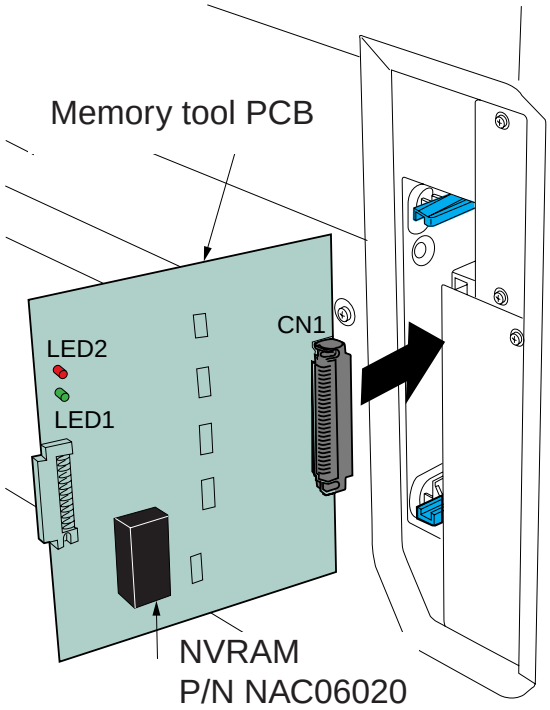

Self-diagnostics: C-codes

C011	Backup memory data problem	
C021	Operation / Main PCB communication problem	(KM 1525 N.A.)
C034	Finisher communication problem (optional)	(KM 1525 N.A.)
C040	MPCB DIMM problem	(KM 1525 N.A.)
C041	MPCB bitmap DRAM problem	(KM 1525 N.A.)
C100	Exposure lamp problem	
C104	Optical system problem (incorrect CCD input voltage)	
C200	Drive motor problem	
C310	Scanner carriage problem	
C400	Polygon motor speed problem (> 19 sec. after starting)	
C401	Polygon motor speed problem (after stabilization)	
C420	Laserbeam detection problem	
C510	Main charger problem	
C610	Low fixing temperature (> 90 sec. at warmup)	
C620	Low fixing temperature (< 100°C) during copying	
C630	High fixing temperature (> 240°C)	
C710	Toner sensor output problem (< 0.5V or > 4.5V)	
C730	External temperature thermistor output problem (> 4.5V)	
C731	External temperature thermistor output problem (< 0.5V)	
C740	Image formation unit insertion problem	
C817	Finisher front side registration	(KM 2030)
C818	Finisher rear side registration	(KM 2030)
C819	Finisher trailing edge registration problem (opt.)	(KM 2030)
C821	Finisher staple motor problem (optional)	(KM 2030)