KYOCERA mita

KM-1620

SERVICE MANUAL

Published in Oct. '03
842C9112
Revision 2

CAUTION

Danger of explosion if battery is incorrectly replaced. Replace only with the same or equivalent type recommended by the manufacturer. Dispose of used batteries according to the manufacturer's instructions.

CAUTION

Double-pole/neutral fusing.

Safety precautions

This booklet provides safety warnings and precautions for our service personnel to ensure the safety of their customers, their machines as well as themselves during maintenance activities. Service personnel are advised to read this booklet carefully to familiarize themselves with the warnings and precautions described here before engaging in maintenance activities.

Safety warnings and precautions

Various symbols are used to protect our service personnel and customers from physical danger and to prevent damage to their property. These symbols are described below:

⚠**DANGER**: High risk of serious bodily injury or death may result from insufficient attention to or incorrect compliance with warning messages using this symbol.

⚠**WARNING**:Serious bodily injury or death may result from insufficient attention to or incorrect compliance with warning messages using this symbol.

⚠**CAUTION**: Bodily injury or damage to property may result from insufficient attention to or incorrect compliance with warning messages using this symbol.

Symbols

The triangle (△) symbol indicates a warning including danger and caution. The specific point of attention is shown inside the symbol.

 General warning.

 Warning of risk of electric shock.

 Warning of high temperature.

⃠ indicates a prohibited action. The specific prohibition is shown inside the symbol.

 General prohibited action.

 Disassembly prohibited.

● indicates that action is required. The specific action required is shown inside the symbol.

 General action required.

 Remove the power plug from the wall outlet.

 Always ground the copier.

1. Installation Precautions

⚠ WARNING

- Do not use a power supply with a voltage other than that specified. Avoid multiple connections to one outlet: they may cause fire or electric shock. When using an extension cable, always check that it is adequate for the rated current. .....



- Connect the ground wire to a suitable grounding point. Not grounding the copier may cause fire or electric shock. Connecting the earth wire to an object not approved for the purpose may cause explosion or electric shock. Never connect the ground cable to any of the following: gas pipes, lightning rods, ground cables for telephone lines and water pipes or faucets not approved by the proper authorities. .....



⚠ CAUTION:



- Do not place the copier on an infirm or angled surface: the copier may tip over, causing injury. .....



- Do not install the copier in a humid or dusty place. This may cause fire or electric shock. .....



- Do not install the copier near a radiator, heater, other heat source or near flammable material. This may cause fire. .....



- Allow sufficient space around the copier to allow the ventilation grills to keep the machine as cool as possible. Insufficient ventilation may cause heat buildup and poor copying performance. .....



- Always handle the machine by the correct locations when moving it. .....



- Always use anti-toppling and locking devices on copiers so equipped. Failure to do this may cause the copier to move unexpectedly or topple, leading to injury. .....



- Avoid inhaling toner or developer excessively. Protect the eyes. If toner or developer is accidentally ingested, drink a lot of water to dilute it in the stomach and obtain medical attention immediately. If it gets into the eyes, rinse immediately with copious amounts of water and obtain medical attention. .....



- Advice customers that they must always follow the safety warnings and precautions in the copier's instruction handbook. .....

2. Precautions for Maintenance

⚠WARNING



• Always remove the power plug from the wall outlet before starting machine disassembly. .....



• Always follow the procedures for maintenance described in the service manual and other related brochures. .....



• Under no circumstances attempt to bypass or disable safety features including safety mechanisms and protective circuits. .....



• Always use parts having the correct specifications. .....



• Always use the thermostat or thermal fuse specified in the service manual or other related brochure when replacing them. Using a piece of wire, for example, could lead to fire or other serious accident. .....



• When the service manual or other serious brochure specifies a distance or gap for installation of a part, always use the correct scale and measure carefully. .....



• Always check that the copier is correctly connected to an outlet with a ground connection. .....



• Check that the power cable covering is free of damage. Check that the power plug is dust-free. If it is dirty, clean it to remove the risk of fire or electric shock. .....



• Never attempt to disassemble the optical unit in machines using lasers. Leaking laser light may damage eyesight. .....



• Handle the charger sections with care. They are charged to high potentials and may cause electric shock if handled improperly. .....

⚠CAUTION



• Wear safe clothing. If wearing loose clothing or accessories such as ties, make sure they are safely secured so they will not be caught in rotating sections. .....



• Use utmost caution when working on a powered machine. Keep away from chains and belts. .....



• Handle the fixing section with care to avoid burns as it can be extremely hot. .....



• Check that the fixing unit thermistor, heat and press rollers are clean. Dirt on them can cause abnormally high temperatures. .....



• Do not remove the ozone filter, if any, from the copier except for routine replacement. .....

• Do not pull on the AC power cord or connector wires on high-voltage components when removing them; always hold the plug itself. .....



• Do not route the power cable where it may be stood on or trapped. If necessary, protect it with a cable cover or other appropriate item. .....



• Treat the ends of the wire carefully when installing a new charger wire to avoid electric leaks. .....



• Remove toner completely from electronic components. .....



• Run wire harnesses carefully so that wires will not be trapped or damaged. .....



• After maintenance, always check that all the parts, screws, connectors and wires that were removed, have been refitted correctly. Special attention should be paid to any forgotten connector, trapped wire and missing screws. .....



• Check that all the caution labels that should be present on the machine according to the instruction handbook are clean and not peeling. Replace with new ones if necessary. .....



• Handle greases and solvents with care by following the instructions below: .....
  · Use only a small amount of solvent at a time, being careful not to spill. Wipe spills off completely.
  · Ventilate the room well while using grease or solvents.
  · Allow applied solvents to evaporate completely before refitting the covers or turning the main switch on.
  · Always wash hands afterwards.

• Never dispose of toner or toner bottles in fire. Toner may cause sparks when exposed directly to fire in a furnace, etc. .....



• Should smoke be seen coming from the copier, remove the power plug from the wall outlet immediately. .....



3. Miscellaneous

⚠WARNING

• Never attempt to heat the drum or expose it to any organic solvents such as alcohol, other than the specified refiner; it may generate toxic gas. .....



CONTENTS

1-1 Specifications

1-1-1 Specifications 1-1-1
1-1-2 Parts names and their functions 1-1-3
(1) Copier 1-1-3
(2) Operation panel 1-1-4
1-1-3 Machine cross section 1-1-5
1-1-4 Drive system 1-1-6

1-2 Handling Precautions

1-2-1 Drum 1-2-1
1-2-2 Toner 1-2-1
1-2-3 Installation environment 1-2-2

1-3 Installation

1-3-1 Unpacking and installation 1-3-1
(1) Installation procedure 1-3-1
1-3-2 Setting initial copy modes 1-3-5
1-3-3 Installing the paper feeder (option) 1-3-6
1-3-4 Installing the DP (option) 1-3-8
1-3-5 Installing the duplex unit (option) 1-3-11
1-3-6 Installing the drawer heater (option) 1-3-14
1-3-7 Installing the key counter (option) *1-3-17*

1-4 Maintenance Mode

1-4-1 Maintenance mode 1-4-1
(1) Executing a maintenance item 1-4-1
(2) Maintenance mode item list 1-4-2
(3) Contents of maintenance mode items 1-4-5
1-4-2 Copier management 1-4-45
(1) Using the copier management mode 1-4-45
(2) Setting department management items 1-4-46
(3) Copy default 1-4-46

1-5 Troubleshooting

1-5-1 Paper misfeed detection 1-5-1
(1) Paper misfeed indication 1-5-1
(2) Paper misfeed detection conditions 1-5-2
(3) Paper misfeeds 1-5-6
1-5-2 Self-diagnosis 1-5-15
(1) Self-diagnostic function 1-5-15
(2) Self-diagnostic codes 1-5-15
1-5-3 Image formation problems 1-5-20
(1) No image appears (entirely white). 1-5-21
(2) No image appears (entirely black). 1-5-21
(3) Image is too light. 1-5-22
(4) Background is visible. 1-5-22
(5) A white line appears longitudinally. 1-5-22
(6) A black line appears longitudinally. 1-5-23
(7) A black line appears laterally. 1-5-23
(8) One side of the copy image is darker than the other. 1-5-23
(9) Black dots appear on the image. 1-5-24
(10) Image is blurred. 1-5-24
(11) The leading edge of the image is consistently misaligned with the original. 1-5-24
(12) The leading edge of the image is sporadically misaligned with the original. 1-5-25
(13) Paper creases. 1-5-25

(14) Offset occurs. 1-5-25
(15) Image is partly missing. 1-5-26
(16) Fixing is poor. 1-5-26
(17) Image is out of focus. 1-5-26
(18) Image center does not align with the original center. 1-5-27
1-5-4 Electrical problems 1-5-28
(1) The machine does not operate when the power switch is turned on. 1-5-28
(2) The drive motor does not operate (C200). 1-5-28
(3) The registration motor does not operate. 1-5-28
(4) The exit motor does not operate. 1-5-28
(5) The scanner motor does not operate. 1-5-29
(6) Cooling fan motor 1 does not operate. 1-5-29
(7) Cooling fan motor 2 does not operate. 1-5-29
(8) The paper feed clutch does not operate. 1-5-29
(9) The bypass paper feed clutch does not operate. 1-5-29
(10) The cleaning lamp does not turn on. 1-5-29
(11) The exposure lamp does not turn on. 1-5-29
(12) The exposure lamp does not turn off. 1-5-30
(13) The fixing heater does not turn on (C600). 1-5-30
(14) The fixing heater does not turn off. 1-5-30
(15) Main charging is not performed. 1-5-30
(16) Transfer charging is not performed. 1-5-30
(17) No developing bias is output. 1-5-30
(18) The original size is not detected. 1-5-30
(19) The original size is not detected correctly. 1-5-30
(20) The message requesting paper to be loaded is shown when paper is present in the drawer. 1-5-31
(21) The size of paper in the drawer is not displayed correctly. 1-5-31
(22) A paper jam in the paper feed, paper conveying or fixing section is indicated when the power switch is turned on. 1-5-31
(23) The message requesting covers to be closed is displayed when the front cover and left cover are closed. 1-5-31
(24) Others. 1-5-31
1-5-5 Mechanical problems 1-5-32
(1) No primary paper feed. 1-5-32
(2) No secondary paper feed. 1-5-32
(3) Skewed paper feed. 1-5-32
(4) The scanner does not travel. 1-5-32
(5) Multiple sheets of paper are fed at one time. 1-5-32
(6) Paper jams. 1-5-32
(7) Toner drops on the paper conveying path. 1-5-32
(8) Abnormal noise is heard. 1-5-32

1-6 Assembly and Disassembly

1-6-1 Precautions for assembly and disassembly 1-6-1
(1) Precautions 1-6-1
(2) Running a maintenance item 1-6-2
1-6-2 Paper feed section 1-6-3
(1) Detaching and refitting the separation pulley 1-6-3
(2) Detaching and refitting the forwarding pulley and paper feed pulley 1-6-5
(3) Detaching and refitting the paper conveying unit 1-6-7
(4) Detaching and refitting the bypass paper feed pulley and bypass separation pad 1-6-9
(5) Detaching and refitting the registration left roller 1-6-11
(6) Detaching and refitting the registration cleaner 1-6-11
(7) Adjustment after roller and clutch replacement 1-6-12
(7-1) Adjusting the leading edge registration of image printing 1-6-12
(7-2) Adjusting the leading edge registration for memory image printing 1-6-13
(7-3) Adjusting the center line of image printing 1-6-14
(7-4) Adjusting the margins for printing 1-6-15
(7-5) Adjusting the amount of slack in the paper 1-6-16

1-6-3 Optical section 1-6-17
(1) Detaching and refitting the exposure lamp 1-6-17
(2) Detaching and refitting the scanner wires 1-6-18
(2-1) Detaching the scanner wires 1-6-18
(2-2) Fitting the scanner wires 1-6-20
(3) Detaching and refitting the ISU (reference) 1-6-23
(4) Detaching and refitting the laser scanner unit 1-6-24
(5) Adjusting the longitudinal squareness (reference) 1-6-27
(6) Adjusting magnification of the scanner in the main scanning direction 1-6-28
(7) Adjusting magnification of the scanner in the auxiliary scanning direction 1-6-29
(8) Adjusting the scanner leading edge registration 1-6-30
(9) Adjusting the scanner center line 1-6-31
(10) Adjusting the margins for scanning an original on the contact glass 1-6-32
1-6-4 Drum section 1-6-33
(1) Detaching and refitting the drum unit 1-6-33
(2) Detaching and refitting the drum separation claws 1-6-34
(3) Detaching and refitting the main charger unit 1-6-35
1-6-5 Developing section 1-6-36
(1) Detaching and refitting the developing unit 1-6-36
1-6-6 Transfer section 1-6-37
(1) Detaching and refitting the transfer roller 1-6-37
1-6-7 Fixing section 1-6-38
(1) Detaching and refitting the fixing unit 1-6-38
(2) Detaching and refitting the press roller 1-6-39
(3) Detaching and refitting the fixing heater M and S 1-6-40
(4) Detaching and refitting the heat roller separation claws 1-6-41
(5) Detaching and refitting the heat roller 1-6-42
(6) Detaching and refitting the fixing thermostat 1-6-43
(7) Detaching and refitting the fixing thermistor 1-6-43

1-7 Requirements on PCB Replacement

1-7-1 Upgrading the firmware on the main PCB 1-7-1
1-7-2 Adjustment-free variable resisters (VR) 1-7-2
1-7-3 Remarks on engine PCB or main PCB replacement 1-7-2

2-1 Mechanical construction

2-1-1 Paper feed section 2-1-1
2-1-2 Optical section 2-1-4
(1) Original scanning 2-1-5
(2) Image printing 2-1-6
2-1-3 Drum section 2-1-8
2-1-4 Developing section 2-1-10
(1) Formation of magnetic brush 2-1-11
(2) Single component developing system 2-1-12
2-1-5 Transfer and separation sections 2-1-13
2-1-6 Fixing section 2-1-15
(1) Fixing temperature system 2-1-16
(2) Fixing temperature control based on ambient temperature 2-1-16
2-1-7 Exit and switchback sections 2-1-17
2-1-8 Duplex section 2-1-18
(1) Paper conveying operation in duplex copying 2-1-19

2-2 Electrical Parts Layout

2-2-1 Electrical parts layout 2-2-1
(1) PCBs 2-2-1
(2) Switches and sensors 2-2-2
(3) Motors 2-2-3
(4) Other electrical components 2-2-4

2-3 Operation of the PCBs

2-3-1 Power source PCB 2-3-1
2-3-2 Main PCB 2-3-4
2-3-3 Engine PCB 2-3-8
2-3-4 Operation unit PCB 2-3-14
2-3-5 CCD PCB 2-3-17

2-4 Appendixes

Timing chart No. 1 2-4-1
Timing chart No. 2 2-4-2
Timing chart No. 3 2-4-3
Timing chart No. 4 2-4-4
Chart of image adjustment procedures 2-4-5
Maintenance parts list 2-4-8
Periodic maintenance procedures 2-4-9
Optional devices supplied parts list 2-4-11
General wiring diagram 2-4-12

1-1-1 Specifications

Type	Desktop
Copying system	Indirect electrostatic system
Originals	Sheets, books and 3-dimensional objects (Maximum original size: A3) Maximum size: A3/11" × 17"
Original feed system	Fixed
Copy paper	Paper weights Drawer: 64 – 105 g/m^2 Bypass table: 45 – 160 g/m^2 Paper type Drawer: Plain paper, recycled paper and colored paper Bypass table: Plain paper, recycled paper, thin paper, thick paper and colored paper
Copying sizes	Maximum: A3/11" × 17" Minimum: A6R /5$^1/_2$" × 8$^1/_2$"
Magnification ratios	Manual mode: 50 – 200%, 1% increments
Copy speed	At 100% magnification in copy mode: A4: 16 copies/min. A4R: 13 copies/min. A3: 8 copies/min. A5R: 10 copies/min. A6R: 10 copies/min. B5: 16 copies/min. B5R: 13 copies/min. B4 (257 × 364 mm): 8 copies/min. 11" × 8$^1/_2$": 16 copies/min. 8$^1/_2$" × 11": 10 copies/min. 11" × 17": 8 copies/min. 8$^1/_2$" × 14": 8 copies/min.
First copy time	Approximately 5.9 s (A4/11" × 8$^1/_2$")
Warm-up time	Less then 19 s (room temperature 23°C/73.4°F, 50% RH)
Paper feed system	Automatic feed Capacity: Drawers: 300 sheets (80 g/m^2) Manual feed Capacity: Bypass: 50 sheets (A4/11" × 8$^1/_2$" or less) 25 sheets (A3, B4, 11" × 17", 8$^1/_2$" × 14")
Paper ejection system	In-machine ejection (face down) Capacity: 250 sheets (80 g/m^2)
Continuous copying	1 – 250 sheets
Photoconductor	OPC (drum diameter 30 mm)
Charging system	Single positive corona charging
Recording system	Semiconductor laser
Developing system	Single component developing system Toner: magnetism toner Toner replenishing: automatic from a toner container
Transfer system	Transfer roller
Separation system	Curvature separation and separation electrode
Fixing system	Heat roller Heat source: halogen heaters (120 V specifications:main 550 W, sub 400W/ 220-240 V specifications:main 600 W, sub 450 W) Control temperature: 170°C/338°F (180°C/356°F on and after 6th sheet) Abnormally high temperature protection device: 180°C/356°F thermostat Fixing pressure: 44.1 N
Charge erasing system	Exposure by cleaning lamp
Cleaning system	Cleaning blade
Scanning system	Flat bed scanning by CCD image sensor
Bitmap memory	18 MB (standard)
Image storage memory	14 MB (standard)
Resolution	600 × 600 dpi
Light source	Inert gas lamp

Dimensions	571 (W) × 552 (D) × 502 (H) mm $22\frac{1}{2}$" (W) × $21\frac{3}{4}$" (D) × $19\frac{3}{4}$" (H)
Weight	Approx. 39 kg/85.8 lbs
Floor requirements	885 (W) × 552 (D) mm $34\frac{13}{16}$" (W) × $21\frac{3}{4}$" (D)
Functions	Automatic paper selection, Image quality selection, Automatic sizeing selection function, zoom function, Duplex copy, Divided copy, Binding margin, Border width, Aggregate copy, Sort copy, Eco-copy, Copy program and Section management mode
Power source	120 V AC, 60 Hz, 11 A 220 – 240 V AC, 50 Hz, 4.5 A (Average)
Power consumption	1320 W
Options	Document processer, paper feeder, duplex unit, key counter

• **Duplex unit**

Type	Internal type
Copy paper	Paper weights: 60 – 90 g/m^2 Paper type: Plain paper, recycled paper and colored paper
Paper sizes	A3 – A5R/11" × 17" – $5\frac{1}{2}$" × $8\frac{1}{2}$"
Power source	Electrically connected to the copier
Dimensions	368 (W) × 53 (D) × 180 (H) mm $14\frac{1}{2}$" (W) × $2\frac{1}{16}$" (D) × $7\frac{1}{16}$" (H)
Weight	Approx. 0.65 kg/1.43 lbs

1-1-2 Parts names and their functions

(1) Copier

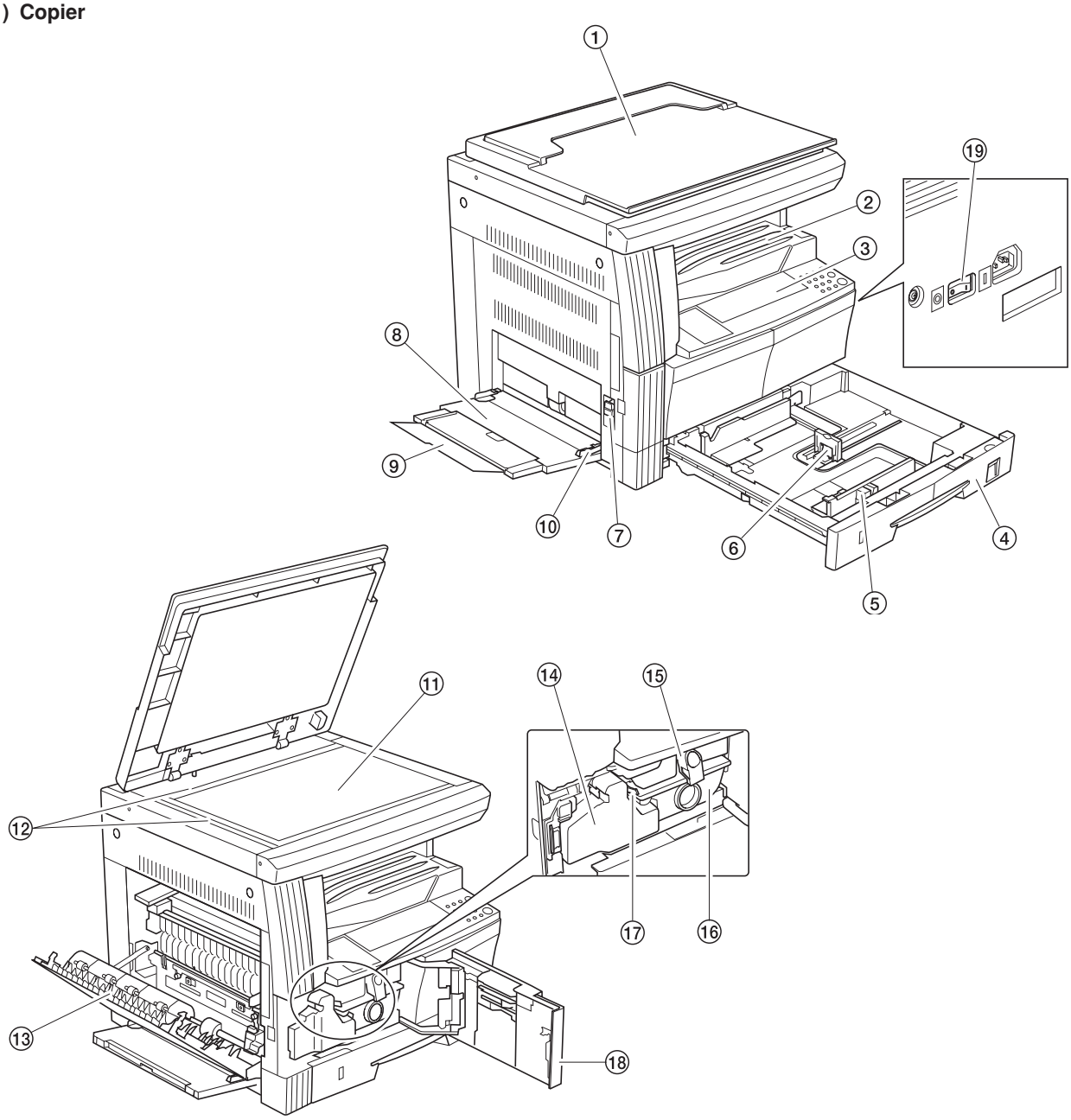

Figure 1-1-1

① Original cover
② Copy storage section
③ Operation panel
④ Drawer
⑤ Width guide
⑥ Length guide
⑦ Left cover handle
⑧ Bypass tray
⑨ Support guide
⑩ Slider
⑪ Contact glass
⑫ Original size indicator plate
⑬ Left cover
⑭ Waste toner box
⑮ Toner container release lever
⑯ Toner container
⑰ Cleaner rod
⑱ Front cover
⑲ Power switch

(2) Operation panel

Metric

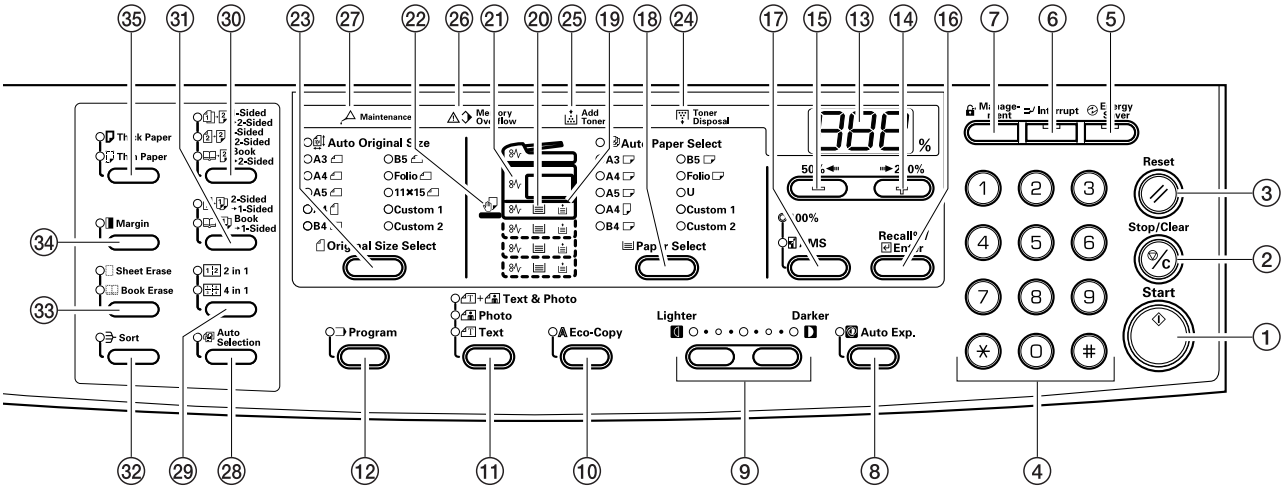

Inch

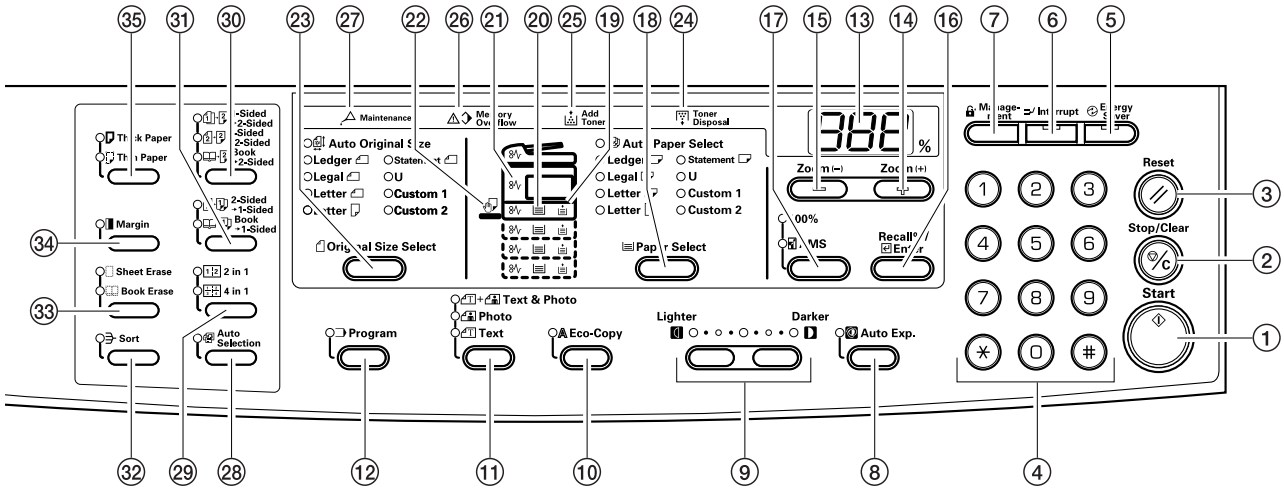

Figure 1-1-2

① Start key (Indicator)
② Stop/Clear key
③ Reset key
④ Numeric keys
⑤ Energy Saver key (Indicator)
⑥ Interrupt key (Indicator)
⑦ Management key
⑧ Auto Exposure key
⑨ Copy exposure adjustment keys (Indicators)
⑩ Eco-copy key
⑪ Image mode selection key
⑫ Program key
⑬ Copy quantity/magnification display
⑭ Zoom (+) key
⑮ Zoom (-) key
⑯ Recall%/Enter key
⑰ Magnification Select key
⑱ Paper Select key
⑲ Paper supply indicator
⑳ Paper supply level indicator
㉑ Paper jam indicator
㉒ Bypass tray indicator
㉓ Original size Select key
㉔ Toner recovery indicator
㉕ Toner supply indicator
㉖ Memory overflow indicator
㉗ Maintenance indicator
㉘ Auto Selection key
㉙ Aggregate copy key
㉚ Duplex copy key
㉛ Divided key
㉜ Sort key
㉝ Border lightening key
㉞ Margin key
㉟ Printer type selection key

1-1-3 Machine cross section

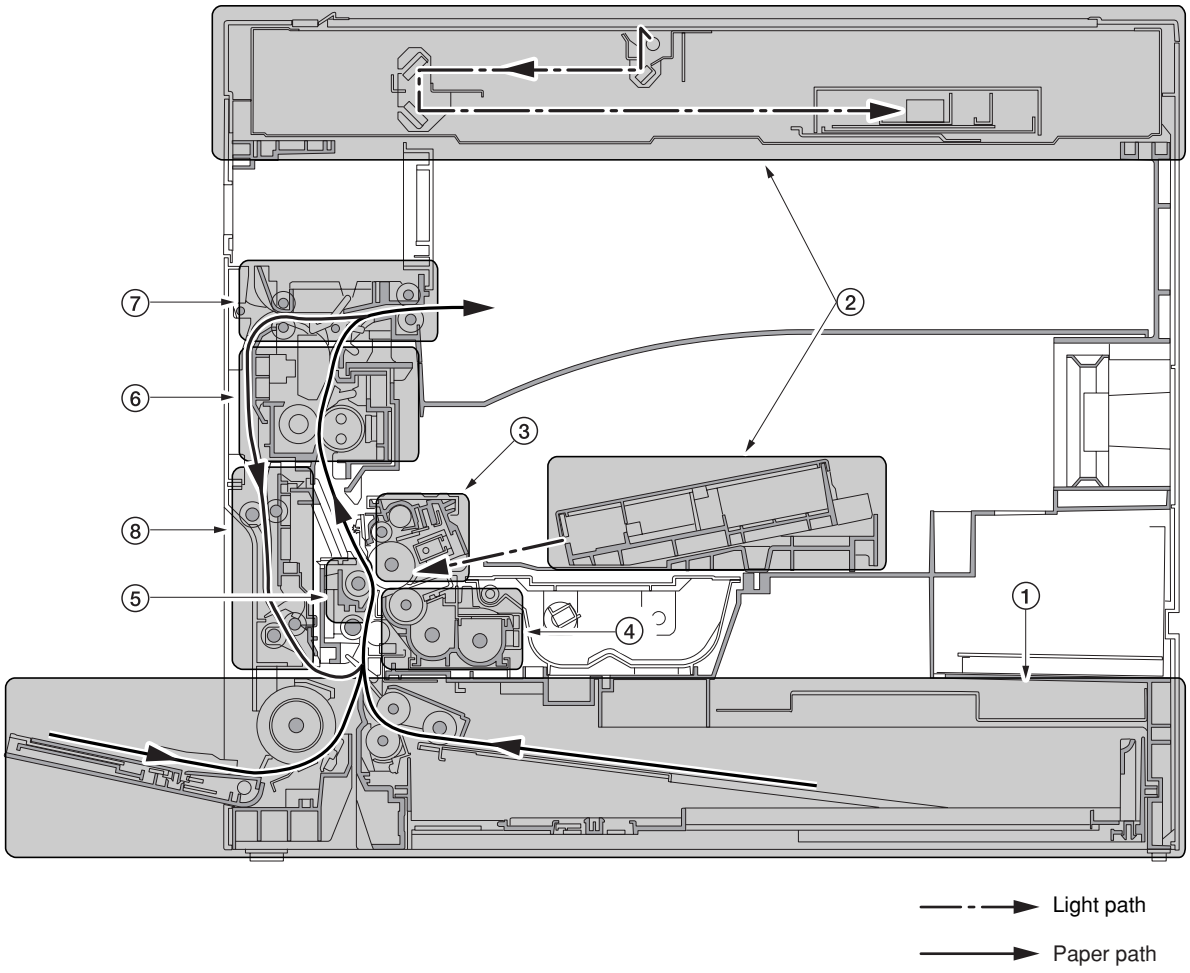

Figure 1-1-3 Machine cross section

① Paper feed section
② Optical section
③ Drum section
④ Developing section
⑤ Transfer and separation section
⑥ Fixing section
⑦ Exit and switchback section
⑧ Duplex section

1-1-4 Drive system

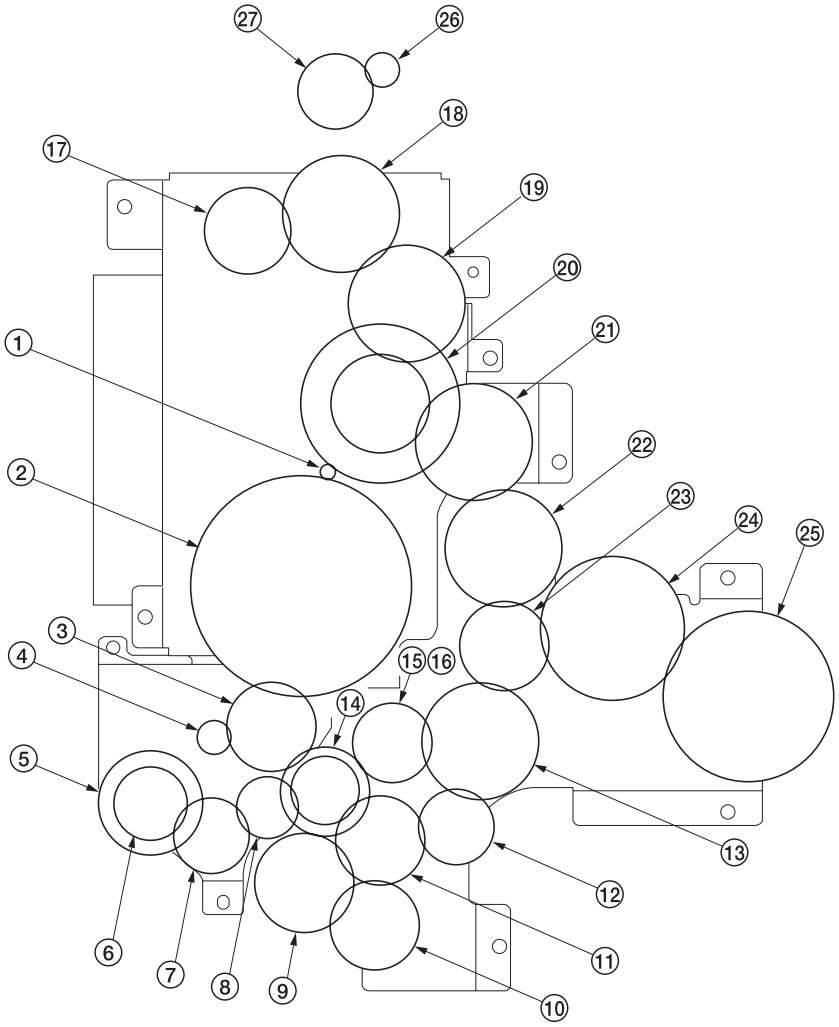

Figure 1-1-4

① Drive motor gear
② Gear 122
③ Registration gear 51
④ Registration motor gear
⑤ Gear 32
⑥ Gear 25
⑦ Gear 25
⑧ Gear 20
⑨ Paper feed clutch gear
⑩ Gear 30
⑪ Gear 31
⑫ Gear 25
⑬ Gear 49
⑭ Gear 30/23
⑮ Developing gear 25
⑯ Developing gear 26
⑰ Fixing joint gear 29
⑱ Gear 40
⑲ Gear 40
⑳ Gear 88/34
㉑ Gear 40
㉒ Fixing joint gear 40
㉓ Coupling gear
㉔ Gear 50
㉕ Gear 60
㉖ Exit motor gear
㉗ Gear 43/20

1-2-1 Drum

Note the following when handling or storing the drum.

- When removing the drum unit, never expose the drum surface to strong direct light.
- Keep the drum at an ambient temperature between –20°C/–4°F and 55°C/131°F and at a relative humidity not higher than 90% RH. Avoid abrupt changes in temperature and humidity.
- Avoid exposure to any substance which is harmful to or may affect the quality of the drum.
- Do not touch the drum surface with any object. Should it be touched by hands or stained with oil, clean it.

1-2-2 Toner

Store the toner in a cool, dark place. Avoid direct light and high humidity.

1-2-3 Installation environment

1. Temperature: 10 - 32.5°C/50 - 90.5°F
2. Humidity: 15 - 80%RH
3. Power supply: 120 V AC, 11 A
   220 - 240 V AC, 4.5 A (Average)
4. Power source frequency: 50 Hz ±0.3%/60 Hz ±0.3%
5. Installation location
   - Avoid direct sunlight or bright lighting. Ensure that the photoconductor will not be exposed to direct sunlight or other strong light when removing paper jams.
   - Avoid extremes of temperature and humidity, abrupt ambient temperature changes, and hot or cold air directed onto the machine.
   - Avoid dust and vibration.
   - Choose a surface capable of supporting the weight of the machine.
   - Place the machine on a level surface (maximum allowance inclination: 1°).
   - Avoid air-borne substances that may adversely affect the machine or degrade the photoconductor, such as mercury, acidic of alkaline vapors, inorganic gasses, NOx, SOx gases and chlorine-based organic solvents.
   - Select a room with good ventilation.
6. Allow sufficient access for proper operation and maintenance of the machine.
   Machine front: 1000 mm/$39\frac{3}{8}$" Machine rear: 100 mm/$3\frac{15}{16}$"
   Machine right: 300 mm/$11\frac{13}{16}$" Machine left: 300 mm/$11\frac{13}{16}$"

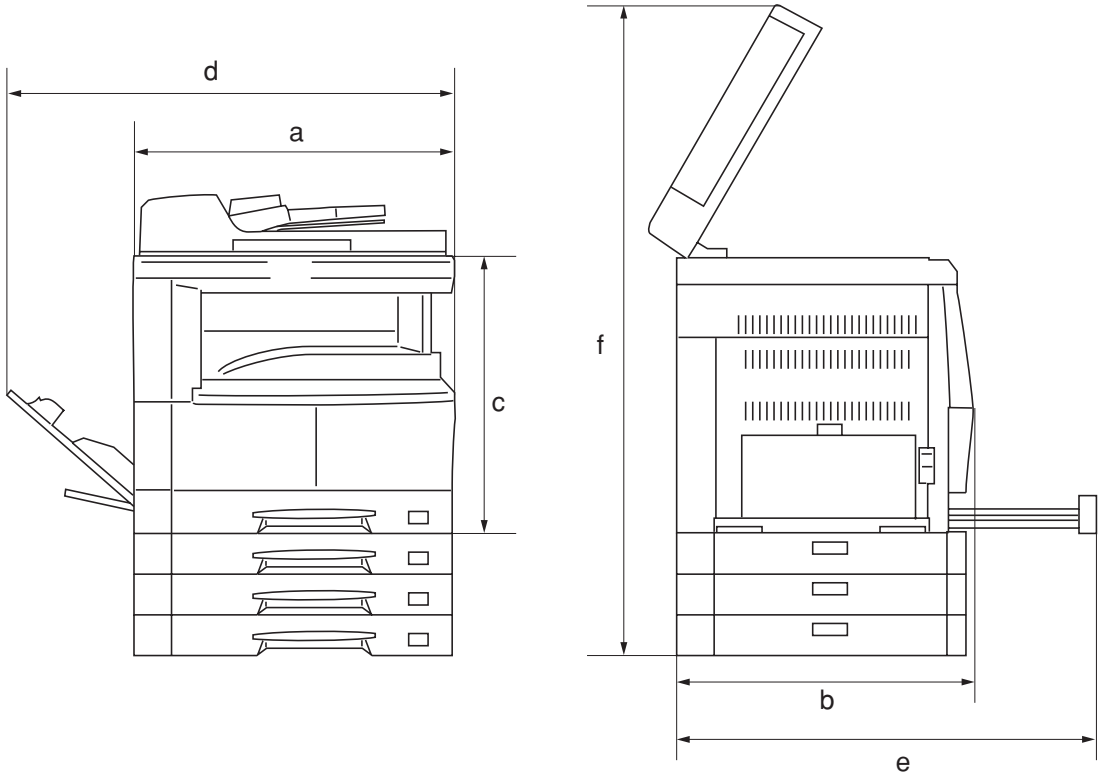

a: 571 mm/$22\frac{1}{2}$"
b: 552 mm/$21\frac{3}{4}$"
c: 502 mm/$19\frac{3}{4}$"
d: 1371.5 mm/54"
e: 1272 mm/$50\frac{1}{16}$"
f: 952.5 mm/$37\frac{1}{2}$"

Figure 1-2-1 Installation dimensions

1-3-1 Unpacking and installation

(1) Installation procedure

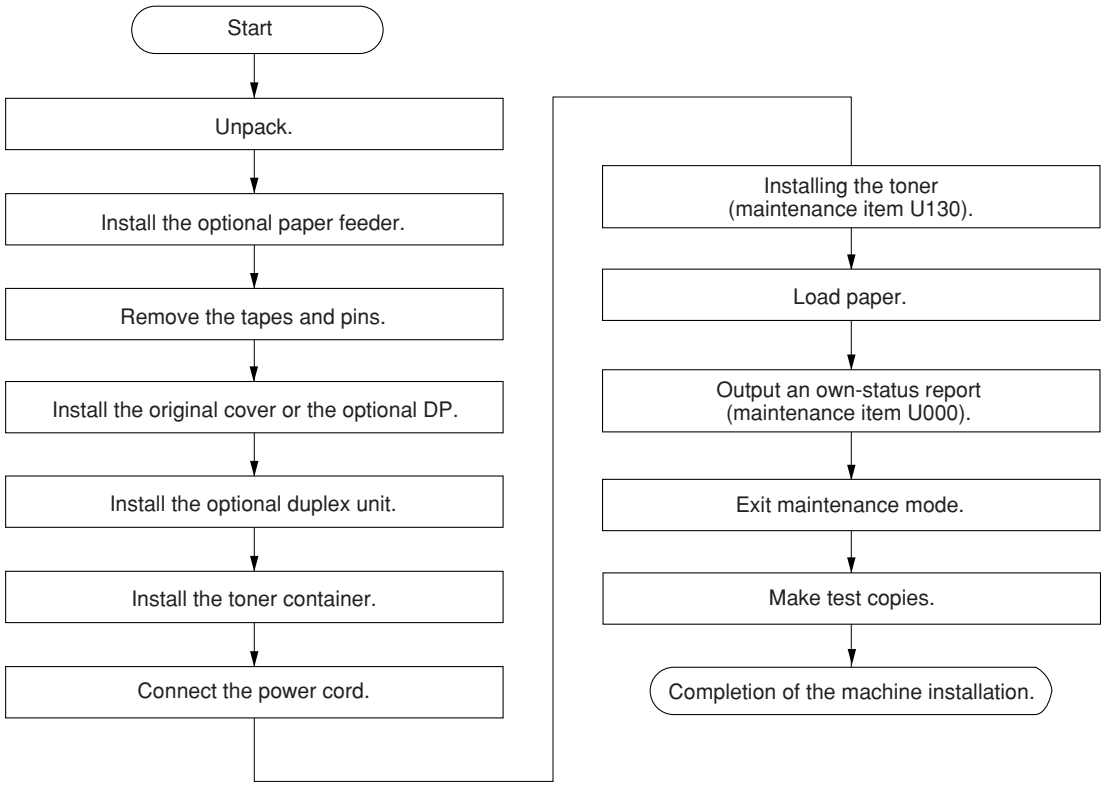

Unpack.

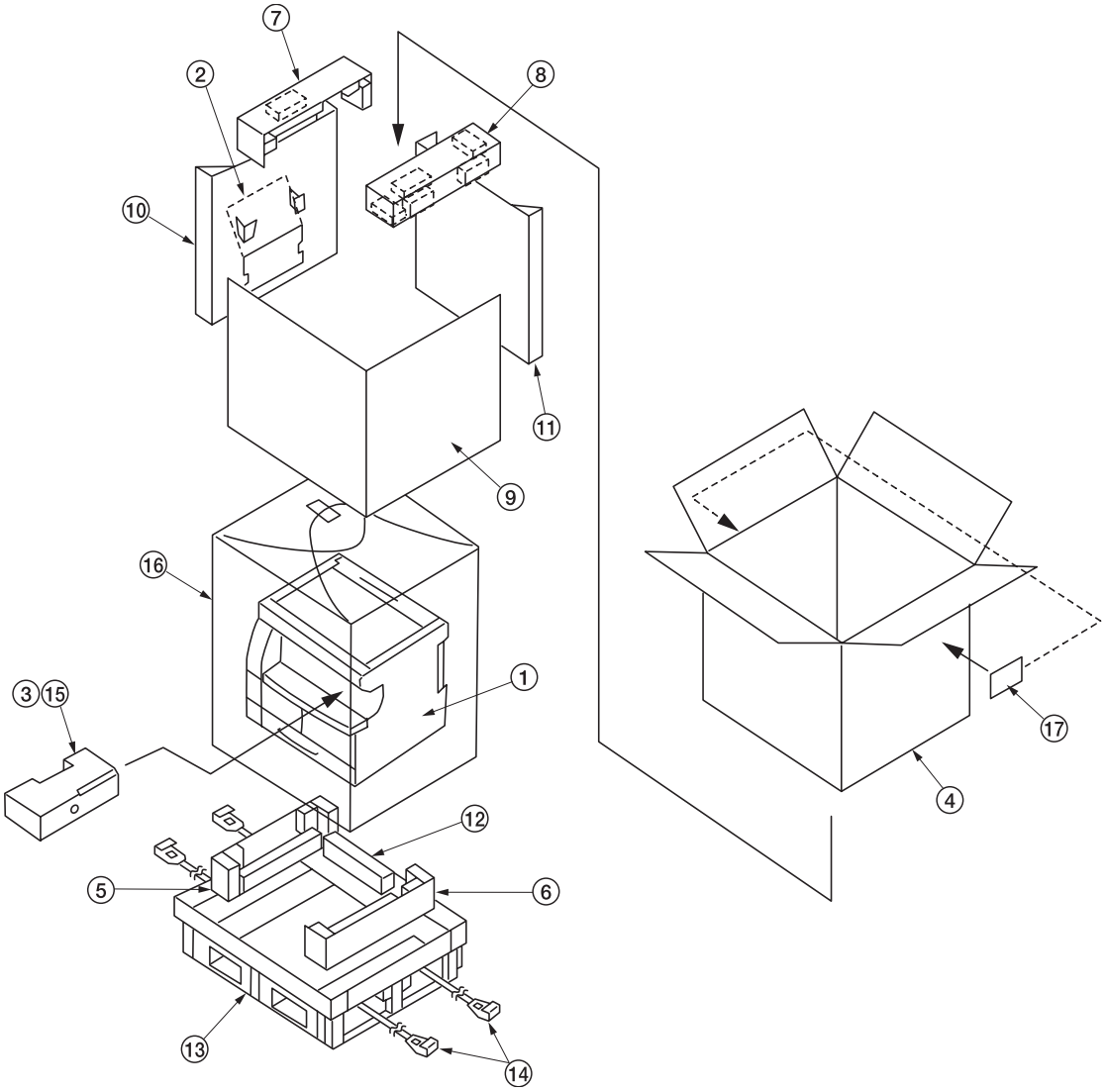

Figure 1-3-1 Unpacking

① Copier
② Power cord
③ Toner container
④ Outer case
⑤ Lower left pad
⑥ Lower right pad
⑦ Upper left pad
⑧ Upper right pad
⑨ Inner frame
⑩ Left spacer
⑪ Rear spacer
⑫ Rear pad
⑬ Skid
⑭ Belt
⑮ Cartridge spacer
⑯ Machine cover
⑰ Bar code labels

* Place the machine on a level surface.

Install the optional paper feeder.

1. Install the optional paper feeder as necessary (see page 1-3-6 to 1-3-7).

Remove the tapes and pins.

1. Remove the eight tapes.

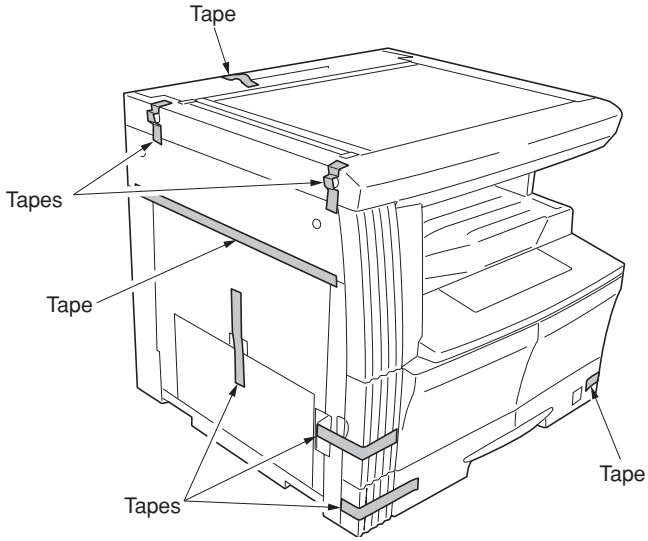

Figure 1-3-2

2. Remove the two pins for light source unit.

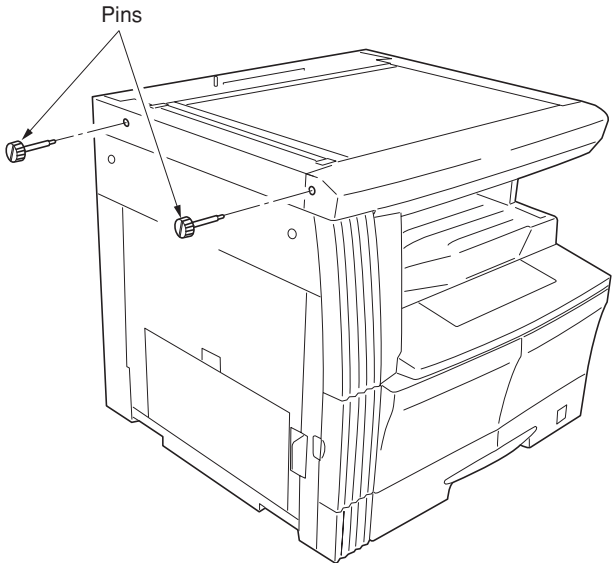

Figure 1-3-3

Install the original cover or the optional DP.

1. Install the original cover or optional DP (see page 1-3-8 to 1-3-10 when installing the DP).

Install the optional duplex unit.

1. Install the optional duplex unit as necessary (see pages 1-3-11 to 1-3-13).

Install the toner container.

1. Open the front cover.
2. Tap the top of the toner container five to six times.
3. Shake the toner container approximately 10 times in the horizontal direction to stir toner.
4. Turn the toner container release lever and gently push the toner container into the copier.
   *Push the container all the way into the copier until it locks in place.
5. Restore the toner container release lever.
6. Close the front cover.

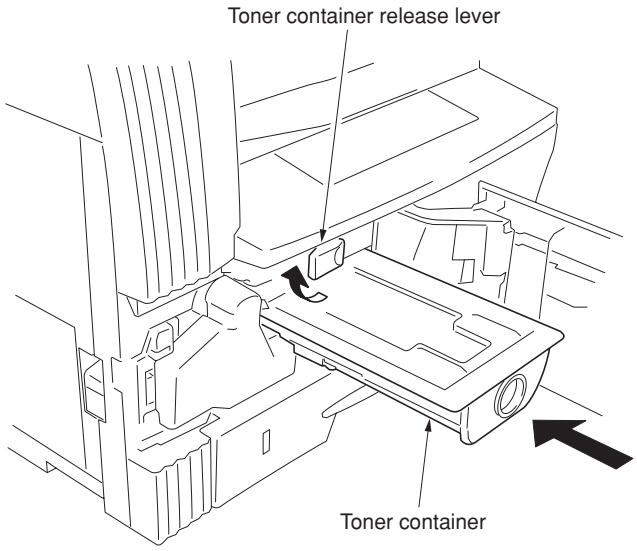

Figure 1-3-4

Connect the power cord.

1. Connect the power cord to the connector on the copier.
2. Insert the power plug into the wall outlet and turn the power switch on.

Installing the toner (maintenance item U130).

1. Enter the maintenance mode by entering “10871087” using the numeric keys.
2. Enter “130” using the numeric keys and press the start key.
3. Press the start key to execute the maintenance item.
   Installation of toner starts and "9" is indicated in the copy quantity display. Each time one minute elapses, the indicated value decrements. When the installation is complete, "Gd" will be displayed if the installation is successful or "nG" will be displayed if it has failed.
4. Press the stop/clear key.

Load paper.

1. Load paper in the drawer.

Output an own-status report (maintenance item U000).

1. Enter “000” using the numeric keys and press the start key.
2. Select “d-L” and press the start key to output a list of the current settings of the maintenance items.
3. Press the stop/clear key.

Exit maintenance mode.

1. Enter "001" using the numeric keys and press the start key.
   The machine exits the maintenance mode.

Make test copies.

1. Place an original and make test copies.

Completion of the machine installation.

1-3-2 Setting initial copy modes

Factory settings are as follows:

Maintenance item No.	Contents	Factory setting
U253	Switching between double and single counts	Double count
U254	Turning auto start function on/off	ON
U255	Setting auto clear time	90s
U258	Switching copy operation at toner empty detection	SINGLE MODE
U260	Changing the copy count timing	After ejection
U342	Setting the ejection restriction	ON

1-3-3 Installing the paper feeder (option)

<Procedure>

1. Place the copier on the paper feeder by aligning the positioning insertion sections of the copier with the positioning pins at the rear part of the paper feeder.
   * When placing the copier, take care not to hit the copier against the drawer, the pins or ground plate of the paper feeder.

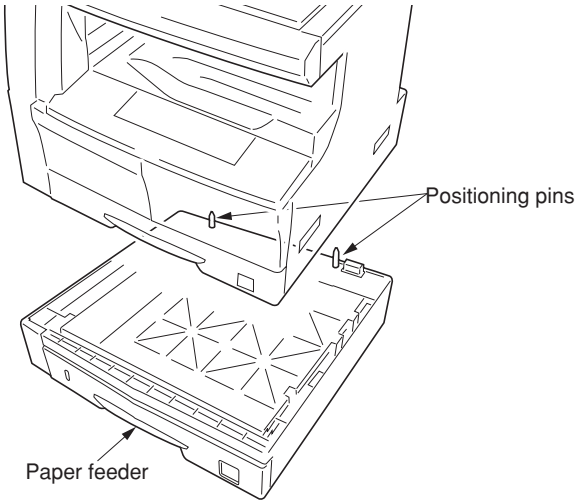

Figure 1-3-5

For stacking paper feeders for use:
Stack a paper feeder on another paper feeder by aligning the positioning insertion sections of the first paper feeder with the positioning pins at the rear part of the second paper feeder. (Up to three paper feeders can be stacked.)

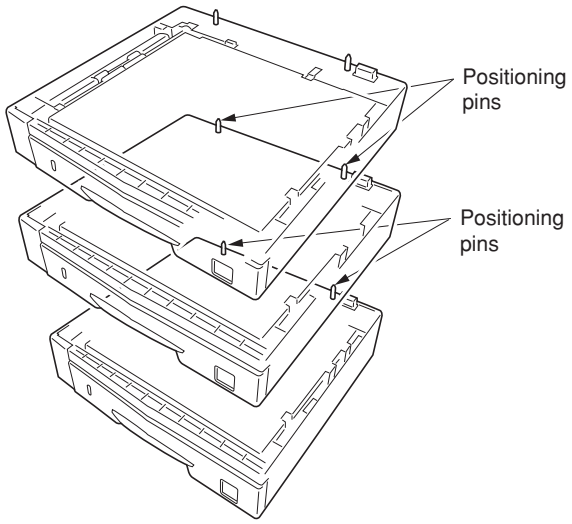

Figure 1-3-6

2. If a type of paper that is not included in the specifications for the standard sheet cassette size is used, replace the cassette size sheet indication with the supplied one.
3. Insert the copier power plug into the wall outlet and turn the copier power switch on.
   Load paper in the drawer and make test copies to check the operation.

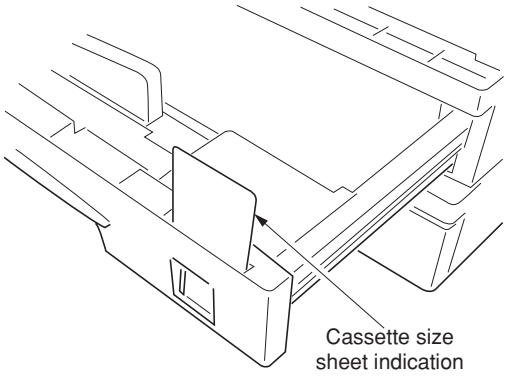

Figure 1-3-7

Adjusting the leading edge timing

1. Run maintenance mode 034.
   Press the image quality mode key until "Text" is lit. (group 1)
   First paper feeder: Press the exposure key until "exp3" is lit. (mode 3)
   Second paper feeder: Press the exposure key until "exp4" is lit. (mode 4)
   Third paper feeder: Press the exposure key until "exp5" is lit. (mode 5)
   Make a test copy to check the image. If an adequate image cannot be obtained, carry out the following adjustment.
2. If a copy example ⓐ is obtained, increase the adjustment value.
   If a copy example ⓑ is obtained, decrease the adjustment value.
   Setting range: -5.0 - 10.0
3. Make a test copy again.
4. Repeat steps 2 and 3 until an adequate image is obtained.

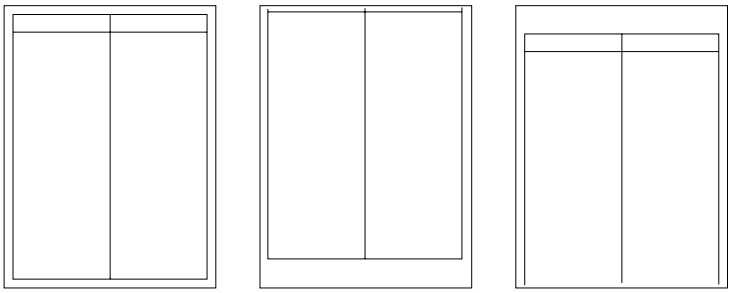

Adequate image Copy example ⓐ Copy example ⓑ

Figure 1-3-8

Adjusting the center line

1. Run maintenance mode 034.
   Press the image quality mode key until "Text" and "Photo" are lit. (group 2)
   First paper feeder: Press the exposure key until "exp3" is lit. (mode 3)
   Second paper feeder: Press the exposure key until "exp4" is lit. (mode 4)
   Third paper feeder: Press the exposure key until "exp5" is lit. (mode 5)
   Make a test copy to check the image. If an adequate image cannot be obtained, carry out the following adjustment.
2. If a copy example ⓐ is obtained, increase the adjustment value.
   If a copy example ⓑ is obtained, decrease the adjustment value.
   Setting range: -8.0 - 10.0
3. Make a test copy again.
4. Repeat steps 2 and 3 until an adequate image is obtained.

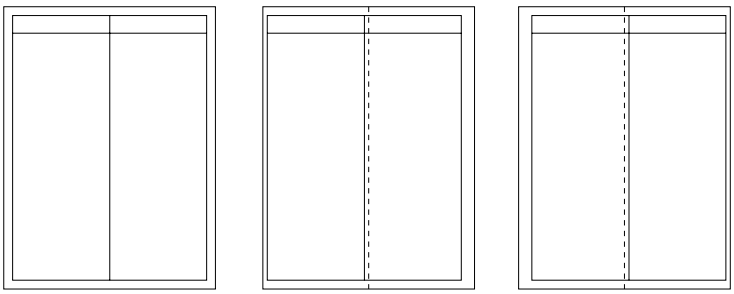

Adequate image Copy example ⓐ Copy example ⓑ

Figure 1-3-9

1-3-4 Installing the DP (option)

<Procedure>

1. Remove the original holder and remove the two screws from the rear top cover.
2. Pass the two pins through the screw holes of the rear top cover and attach them to the lower frame.

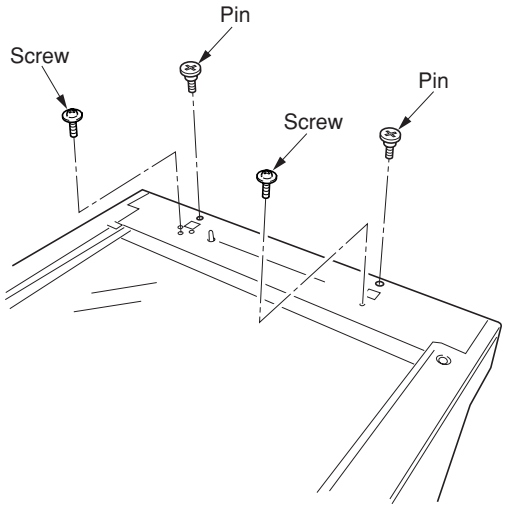

Figure 1-3-10

3. Place the DP on the copier by fitting the pins into the holes at the hinge sections of the DP and sliding them toward the front side.

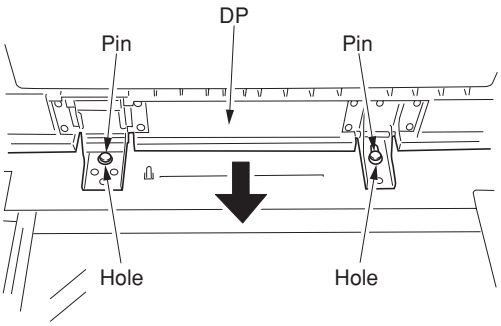

Figure 1-3-11

4. Secure the DP with the two chrome TP screws M4 x 10 and the two screws that have been removed in step 1.

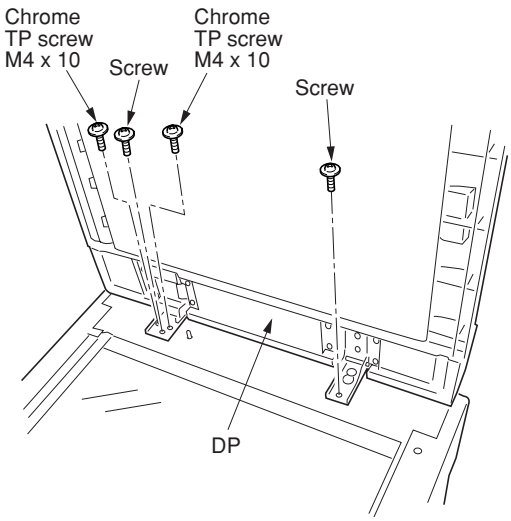

Figure 1-3-12

5. Close the DP, fit the fixing fitting from the rear side of the right hinge, and secure it with the two bronze TP screws M3 x 06.
6. Connect the cable of the DP to the copier.
   * Be sure to tighten the fixing screws on both side of the connector.

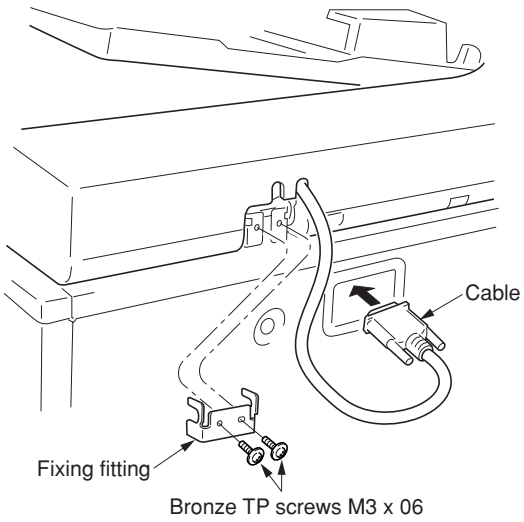

Figure 1-3-13

7. Paste the caution label that corresponds to the language according to the destination to the DP.

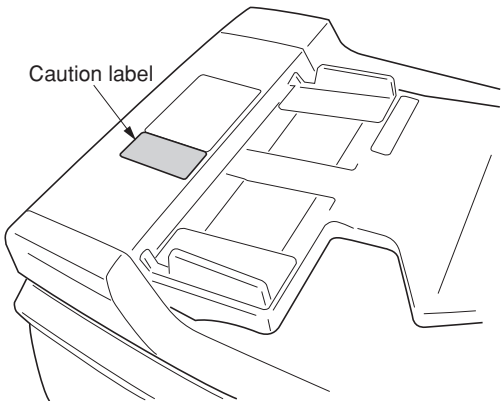

Figure 1-3-14

[Operation check]

1. Prepare an original on which 4 lines are drawn 15 mm from the edges and the center line is drawn.
2. Set the original on the DP and make a test copy to check the copy image.
   At this time, set the paper guide for the original table and drawer to the paper size to be used.
3. If the copy image does not match the original image, carry out the following adjustments in maintenance mode.
   - Maintenance mode 070 (sub-scan line adjustment)
   - Maintenance mode 071 (leading edge timing adjustment)
   - Maintenance mode 072 (center line adjustment)

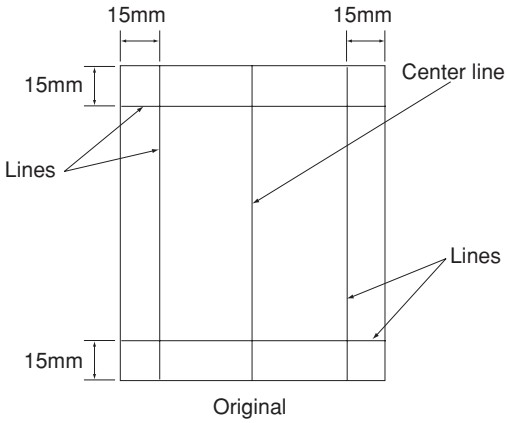

Figure 1-3-15

Maintenance mode 070 (sub-scan line adjustment)
For copy example ⓐ: decrease the value.
For copy example ⓑ: increase the value.
Changing the value by one changes the sub-scan line by 0.1%.
The larger the value, the larger the magnification of the sub-scan line of the copy image.
The smaller the value, the smaller the magnification of the sub-scan line of the copy image.

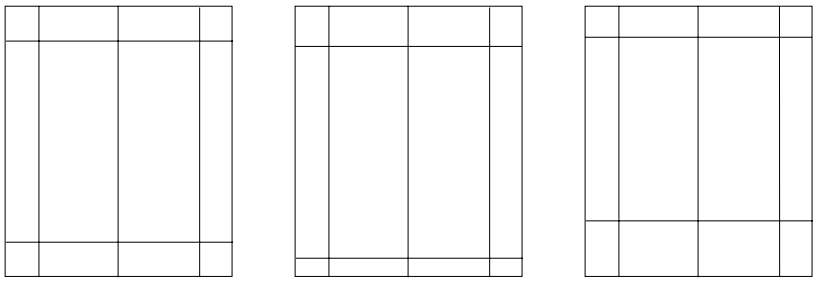

Original　　Copy example ⓐ　　Copy example ⓑ

Figure 1-3-16

Maintenance mode 071 (leading edge timing adjustment)
For copy example ⓐ: increase the value.
For copy example ⓑ: decrease the value.
Changing the value by one moves the leading edge by 0.17 mm.
The larger the value, the later the image scan start timing.
The smaller the value, the earlier the image scan start timing.

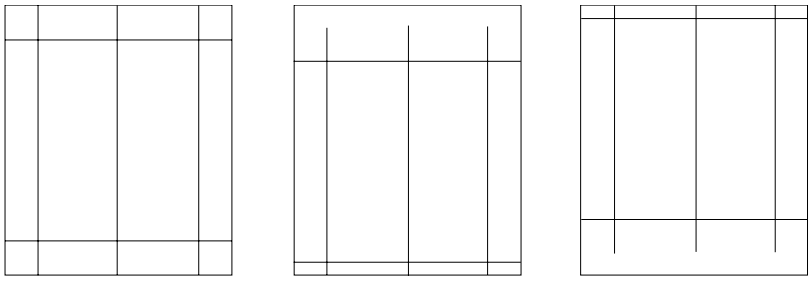

Original　　Copy example ⓐ　　Copy example ⓑ

Figure 1-3-17

Maintenance mode 072 (center line adjustment)
For copy example ⓐ: increase the value.
For copy example ⓑ: decrease the value.
Changing the value by one moves the center line by 0.17 mm.
The larger the value, the center of the image moves toward the right.
The smaller the value, the center of the image moves toward the left.

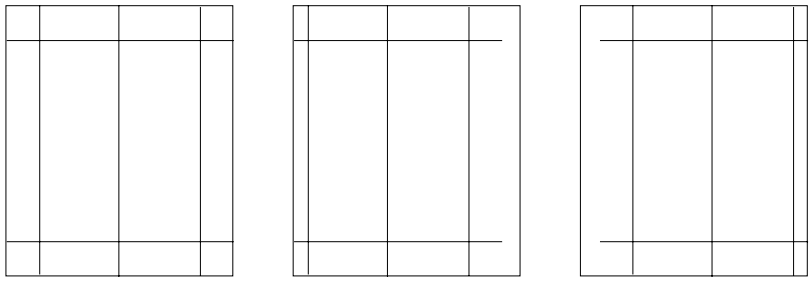

Original　　Copy example ⓐ　　Copy example ⓑ

Figure 1-3-18

1-3-5 Installing the duplex unit (option)

<Procedure>

1. Open the left cover.
2. Remove the stop ring and the strap from the rear side.
3. Restore the conveyor section.
4. Remove the fitting projection and pin, and then remove the stopper from the front side.
5. Open the left cover until it is put horizontally.

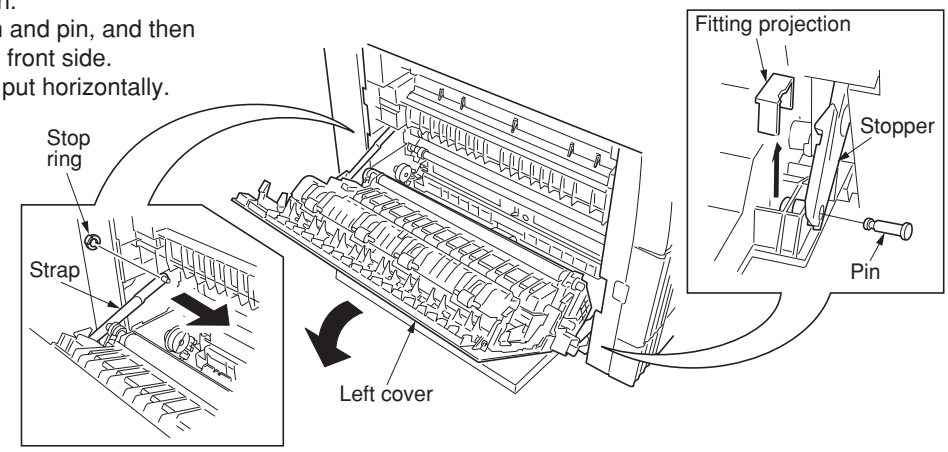

Figure 1-3-19

6. Turn the wire guide section of the duplex unit in the direction indicated by the arrow.

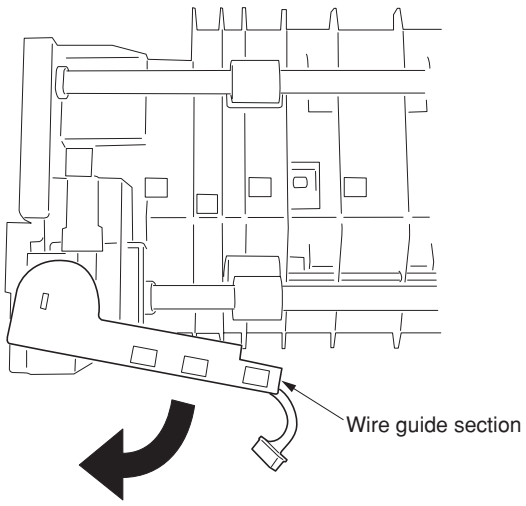

Figure 1-3-20

7. Insert the axis sections of the duplex unit into the U-shape grooves of the conveyer unit.

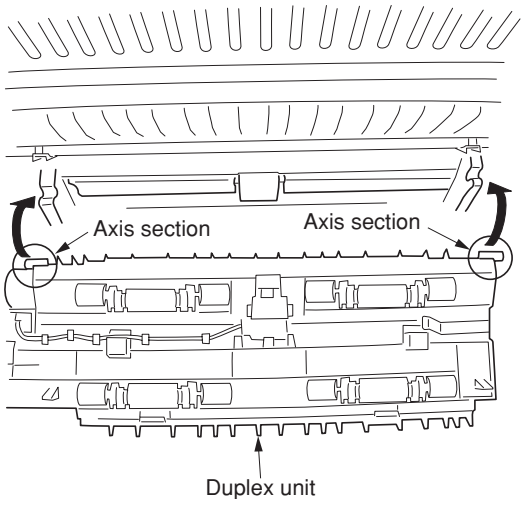

Figure 1-3-21

8. Press the duplex unit in the direction indicated by the arrow to fit the claws into the conveyer unit.

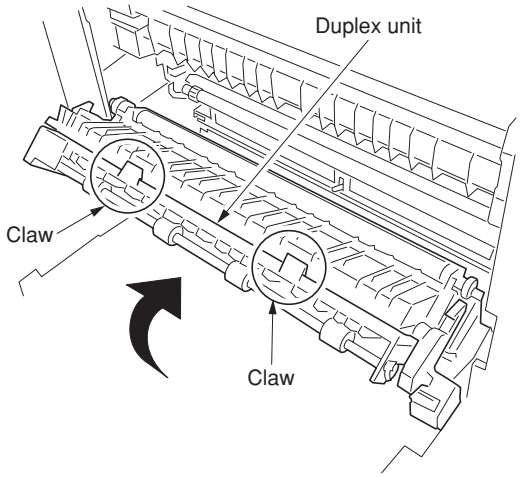

Figure 1-3-22

9. Secure the duplex unit with the two S tite screws M3 x 06.

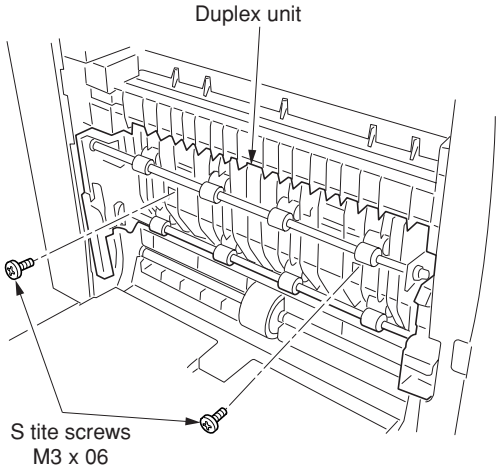

Figure 1-3-23

10. Open the conveyer unit and connect the connector of the duplex unit to the copier.
11. Reattach the removed parts to their original positions.
12. Connect the copier power plug to the wall outlet and turn the copier power switch on.

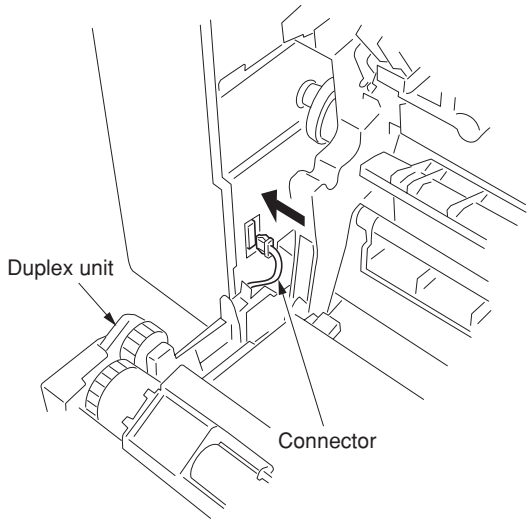

Figure 1-3-24

Adjusting the leading edge timing

1. Run maintenance mode 034.
   Press the image quality mode key until "Text" is lit. (group 1)
   Press the exposure key until "exp1" is flashing. (mode 6)
   Make a test copy in the duplex mode to check the image. If an adequate image cannot be obtained, carry out the following adjustment.
2. If a copy example ⓐ is obtained, increase the adjustment value.
   If a copy example ⓑ is obtained, decrease the adjustment value.
   Setting range: -5.0 - 10.0
3. Make a test copy again.
4. Repeat steps 2 and 3 until an adequate image is obtained.

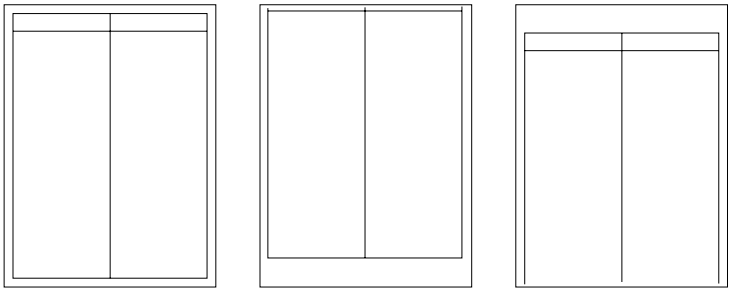

Adequate image Copy example ⓐ Copy example ⓑ

Figure 1-3-25

Adjusting the center line

1. Run maintenance mode 034.
   Press the image quality mode key until "Text" and "Photo" are lit. (group 2)
   Press the exposure key until "exp1" is flashing. (mode 6)
   Make a test copy in the duplex mode to check the image. If an adequate image cannot be obtained, carry out the following adjustment.
2. If a copy example ⓐ is obtained, increase the adjustment value.
   If a copy example ⓑ is obtained, decrease the adjustment value.
   Setting range: -8.0 - 10.0
3. Make a test copy again.
4. Repeat steps 2 and 3 until an adequate image is obtained.

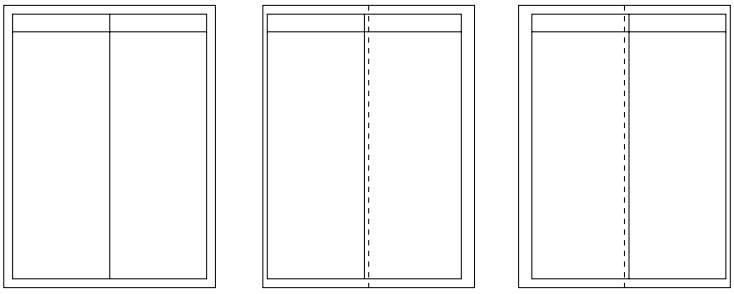

Adequate image Copy example ⓐ Copy example ⓑ

Figure 1-3-26

1-3-6 Installing the drawer heater (option)

Drawer heater installation requires the following parts:
- Drawer heater (P/N 120 V specifications: 2C960030, 220-240 V specifications: 2C960040)
- One (1) M4 × 10 tap-tight S binding screw (P/N B3024100)

<Procedure>
1. Remove the right cover.
2. Pull out the drawer.
3. Remove the three screws and then the front right cover.

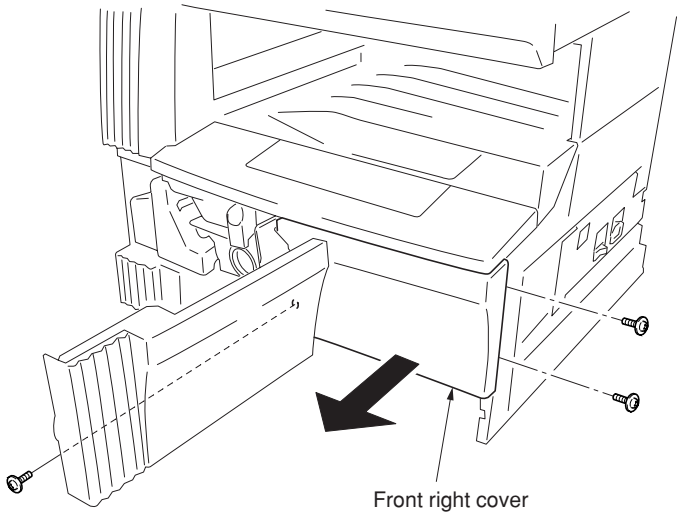

Figure 1-3-27

4. Insert the cassette heater from the bottom of the machine and attach it to the copier.
1) Pass the connector of the cassette heater through the hole located in the right frame of the machine to pull it out.
2) Insert the projections at the rear side of the cassette heater mounting plate into the two holes in the rear frame of the machine.
3) Position the screw hole of the drawer heater to the screw hole of the front frame of the machine and secure the heater using the M4 × 10 Taptite S binding screw.

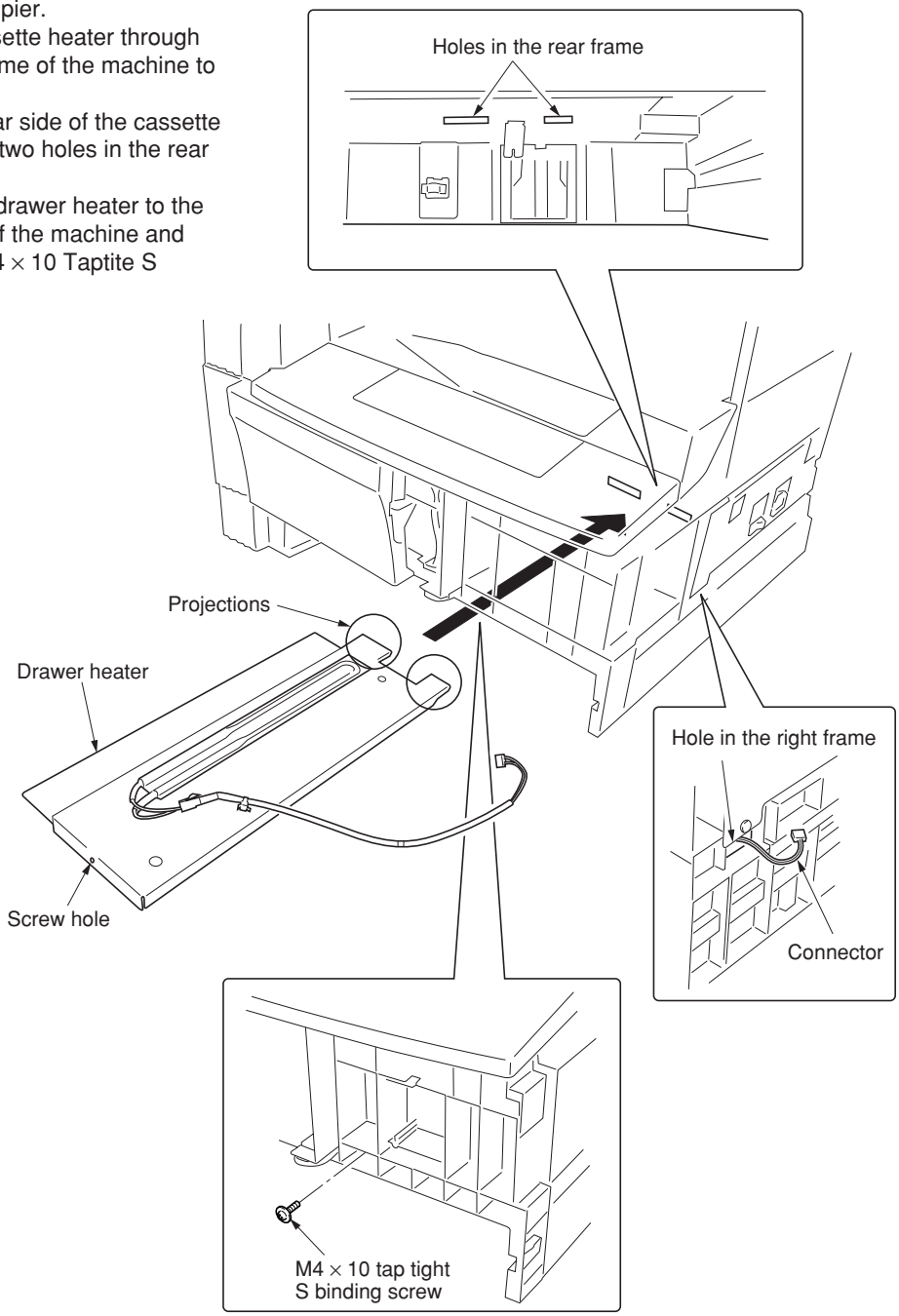

Figure 1-3-28

5. Remove the two screws and open the power source PCB in the direction indicated by the arrow.
 * Take care not to open the power source PCB too much.
6. Fit the wire of the drawer heater into the groove of the frame and put it inside the power source PCB.
 * Fit the wire into the groove so that the band mounted to the wire is located above the frame.

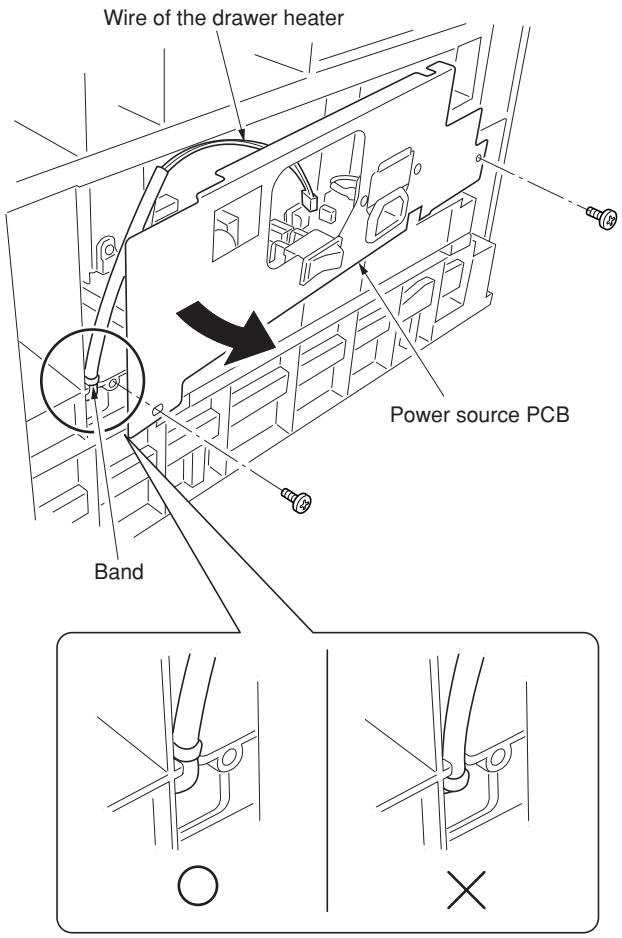

Figure 1-3-29

7. Reattach the power source PCB to its original position and connect the connector of the drawer heater to YC8 of the power source PCB.
8. Refit all the removed parts.

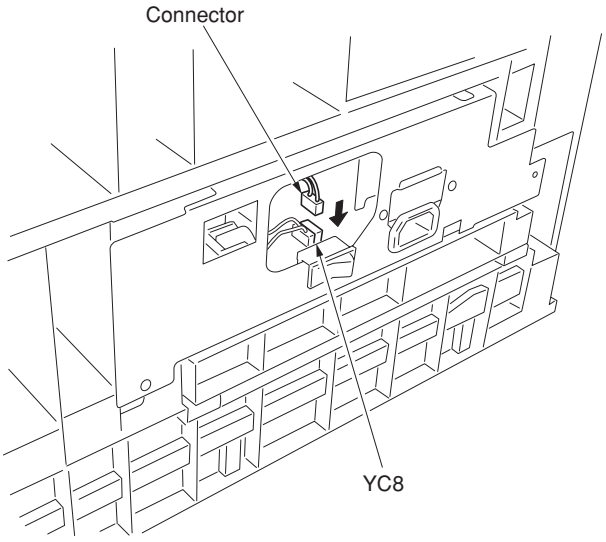

Figure 1-3-30

1-3-7 Installing the key counter (option)

Key counter installation requires the following parts:
- Key counter cover (P/N 2A360010)
- Key counter retainer (P/N 66060030)
- Key counter mount (P/N 66060040)
- Key counter assembly (P/N 41529210)
- Four (4) M4 × 6 bronze TP-A screws (P/N B4304060)
- One (1) M4 × 35 round head screw (P/N B0004350)
- Two (2) M3 × 6 bronze flat-head screws (P/N B2303060)
- One (1) M3 bronze nut (P/N C2303000)
- Key counter mounting plate (P/N 2C960100)
- Key counter wire (P/N 2C960110)

Procedure

1. Fit the key counter socket assembly to the key counter retainer using the two screws and nut.
2. Fit the key counter mount to the key counter cover using the two screws, and attach the key counter retainer to the mount using the two screws.

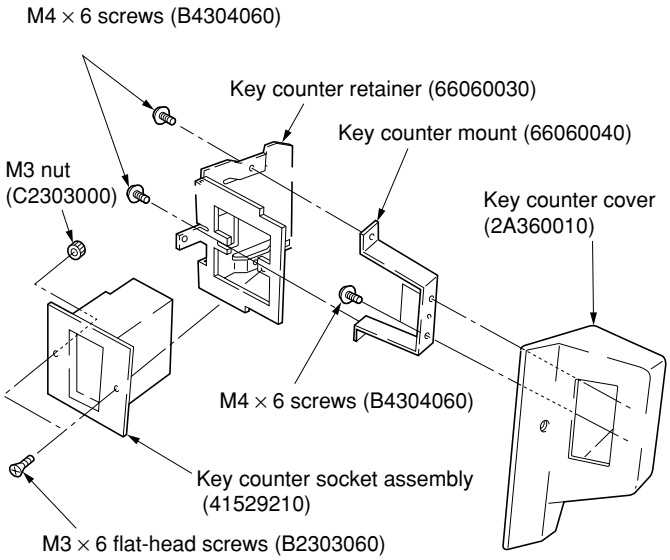

Figure 1-3-31

3. Remove the rear cover.
4. Cut out the aperture plate on the right cover using nippers.
5. Connect the 4-pin connector of the key counter wire (located at a longer distance from the tube) to YC13 on the engine PCB, pass the wire through the two clamps, and pull the other 4-pin connector out from the aperture of the right cover.
   * Arrange the key counter wire behind the optical system wire as shown in the illustration.
6. Fold the 7-pin connector of the key counter wire back, pass the wire through the clamp at the upper part of the controller box, and hang it.

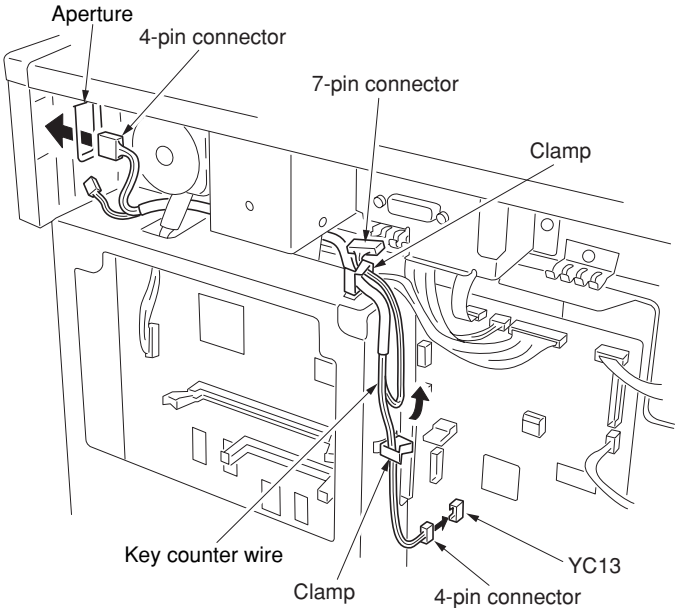

Figure 1-3-32

7. Pass the connector of the key counter through the aperture of the key counter mounting plate, and engage the projection of key counter mounting plate with the square hole of the key counter cover.

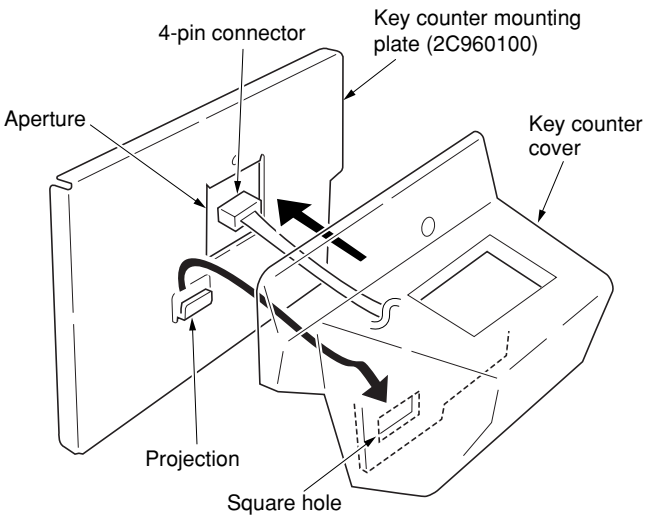

Figure 1-3-33

8. Connect the 4-pin connector of the key counter to the key counter wire.
9. Engage the projection of the key counter mounting plate with the aperture of the right cover.
10. Secure the key counter cover and the key counter mounting plate together with the copier using a M4 x 35 screw.
11. Refit the rear cover.

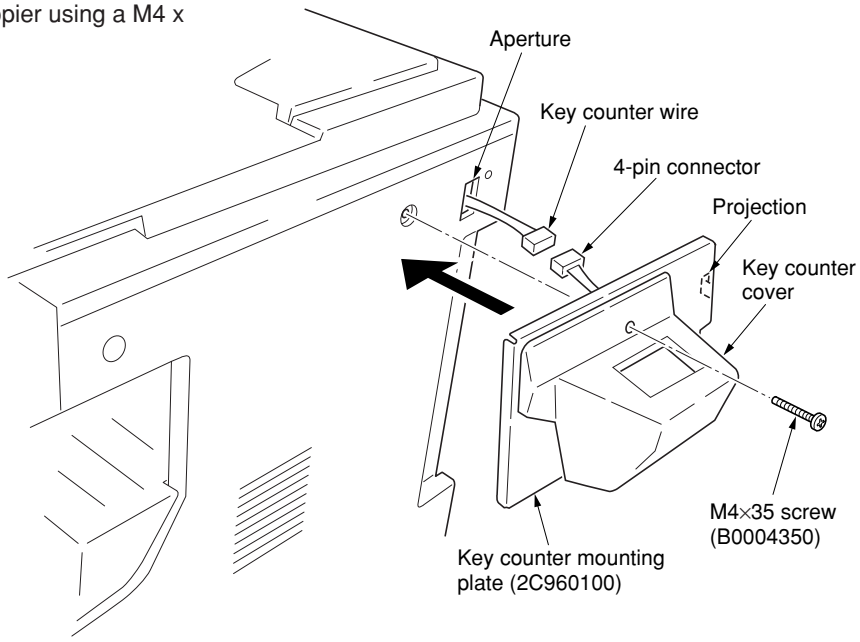

Figure 1-3-34

12. Insert the key counter into the key counter socket assembly.
13. Turn the main switch on and enter the maintenance mode.
14. Run maintenance item U204 and select “KEY-COUNTER.”
15. Exit the maintenance mode.
16. Check that if the key counter is removed, “U1” is displayed in the copy quantity display.
17. Check that the counter counts up as copies are made.

1-4-1 Maintenance mode

The copier is equipped with a maintenance function which can be used to maintain and service the machine.

(1) Executing a maintenance item

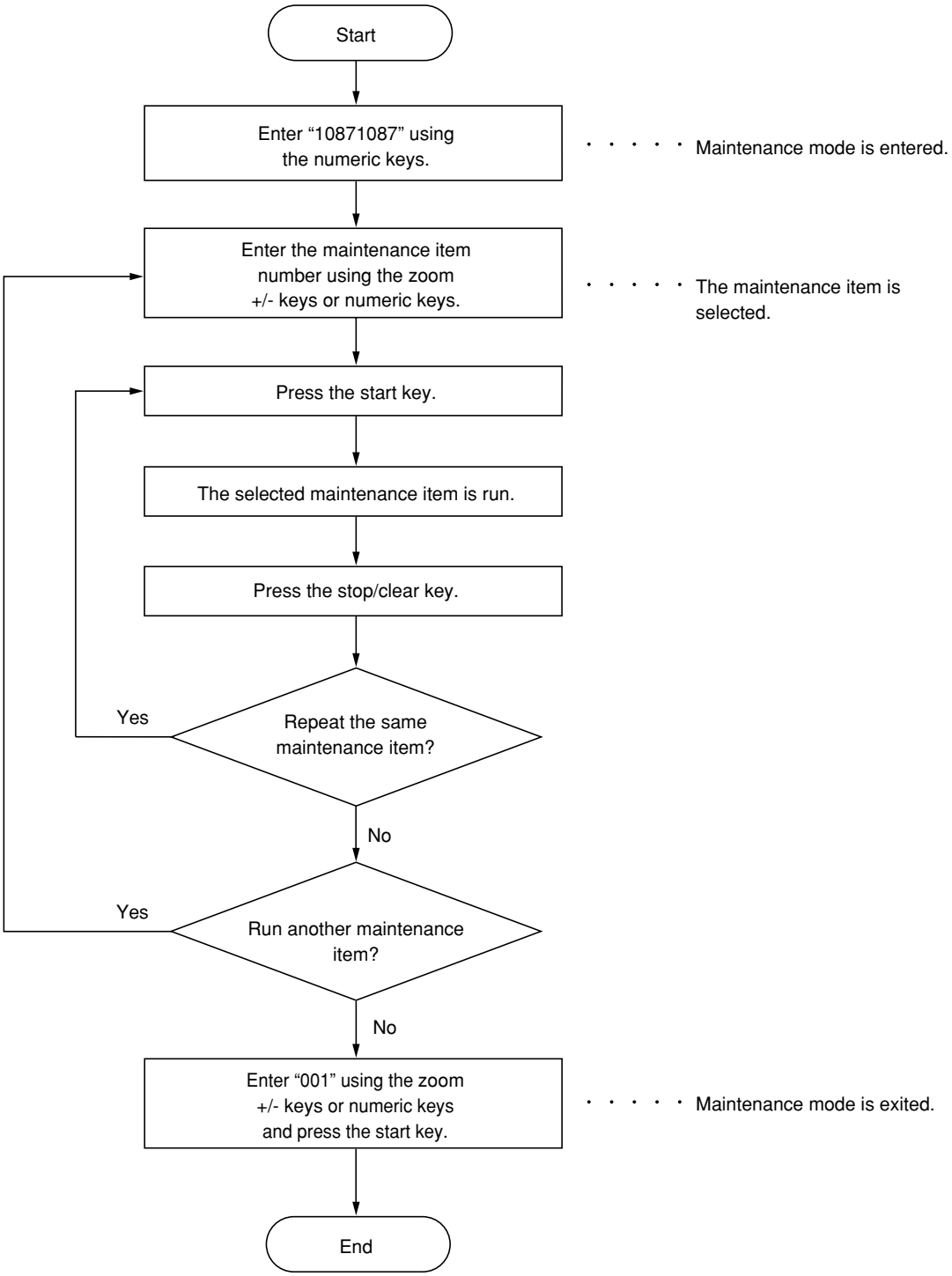

(2) Maintenance mode item list

Section	Item No.	Maintenance item contents	Initial setting*
General	U000	Outputting an own-status report	—
	U001	Exiting the maintenance mode	—
	U004	Checking the machine number	—
	U005	Copying without paper	—
	U019	Displaying the ROM version	—
Initialization	U020	Initializing all data	—
	U021	Initializing memories	—
Drive, paper feed and paper conveying system	U030	Checking motor operation	—
	U031	Checking switches for paper conveying	—
	U032	Checking clutch operation	—
	U034	Setting paper timing • Adjusting the leading edge registration • Adjusting the center line	 5.1/0/0/0/0/0 -1.2/0/0/0/0/0
	U035	Setting folio size • Length • Width	 330 210
	U051	Adjusting the amount of slack in the paper	20/0/70/80/80/0
	U053	Performing fine adjustment of the motor speed • Drive motor speed adjustment • Polygon motor speed adjustment • Exit motor speed adjustment • Registration motor speed adjustment • Motor speed adjustment (for paper feed from bypass tray) • Motor speed adjustment (for paper feed from optional paper feeder) • Motor speed adjustment (in duplex mode)	 0 0 0 0 0 0 0
Optical	U060	Adjusting the scanner input properties	12
	U061	Turning the exposure lamp on	—
	U063	Adjusting the shading position	0
	U065	Adjusting the scanner magnification • Main scanning direction • auxiliary scanning direction	 0 –12
	U066	Adjusting the leading edge registration for scanning an original on the contact glass	10
	U067	Adjusting the center line for scanning an original on the contact glass	0
	U068	Adjusting the scanning position for originals from the DP	0
	U070	Adjusting the DP magnification	0
	U071	Adjusting the DP scanning timing • Adjusting leading edge registration • Adjusting trailing edge registration	 0 0
	U072	Adjusting the DP center line	0
	U073	Checking scanner operation	—
	U074	Adjusting the DP input light luminosity	1
	U087	Turning the DP scanning position adjust mode on/off	35
	U088	Setting the input filter (moiré reduction mode)	Off
	U089	Outputting a MIP-PG pattern	—
	U091	Checking shading	—
	U092	Adjusting the scanner automatically	—
	U093	Setting the exposure density gradient • Text/text and photo/photo mode	 0/0/0
	U099	Checking the original size detection	—

* Initial setting for executing maintenance item U020

Section	Item No.	Maintenance item contents	Initial setting*
High voltage	U100	Setting the main high voltage • Grid control voltage • Copy interval • Copy quantity • Correction amount	 135 60 50 10
	U101	Setting the other high voltages • Developing bias clock frequency • Developing bias clock duty • Transfer control voltage (large size) • Transfer control voltage (small size) • Transfer charging output OFF timing • Transfer charging output ON timing • Separation control voltage • Separation charging output ON timing • Separation charging output OFF timing	 27 45 168 179 38 34 1 33 43
	U110	Checking/clearing the drum count	—
Developing	U130	Toner install mode	—
	U144	Setting toner loading operation	0
	U158	Checking/clearing the developing count	—
Fixing and cleaning	U161	Setting the fixing control temperature • Primary stabilization fixing temperature • Secondary stabilization fixing temperature • Copying operation temperature 1 • Copying operation temperature 2 • Number of sheets for fixing control • Number of sheets for fixing control (thick paper)	 140 160 170 180 5 20
	U162	Stabilizing fixing forcibly	—
	U163	Resetting the fixing problem data	—
	U167	Checking/clearing the fixing count	—
	U199	Checking the fixing temperature	—
Operation panel and support equipment	U200	Turning all LEDs on	—
	U202	Setting the KMAS host monitoring system	—
	U203	Operating DP separately	—
	U204	Setting the presence or absence of a key card or key counter	Off
	U207	Checking the operation panel keys	—
	U243	Checking the operation of the DP motors and solenoids	—
	U244	Checking the DP switches	—
Mode setting	U250	Setting the maintenance cycle	150000
	U251	Checking/clearing the maintenance count	0
	U252	Setting the destination	Japan
	U253	Switching between double and single counts	A3
	U254	Turning auto start function on/off	On
	U255	Setting auto clear time	90
	U258	Switching copy operation at toner empty detection	Single mode
	U260	Changing the copy count timing	After ejection
	U265	Setting the destination specifications	0
	U332	Setting the size conversion factor	1.0
	U342	Setting the ejection restriction	On
	U345	Setting the value for maintenance due indication	—

* Initial setting for executing maintenance item U020

Section	Item No.	Maintenance item contents	Initial setting*
Image processing	U402	Adjusting margins of image printing	—
	U403	Adjusting margins for scanning an original on the contact glass	—
	U404	Adjusting margins for scanning an original from the DP	—
	U407	Adjusting the leading edge registration for memory image printing	—
Others	U901	Checking/clearing copy counts by paper feed locations	—
	U903	Checking/clearing the paper jam counts	—
	U904	Checking/clearing the service call counts	—
	U905	Checking/clearing counts by the DP	—
	U908	Checking the total count	—
	U910	Clearing the black ratio data	—
	U911	Checking/clearing copy counts by paper size	—
	U927	Clearing accounting counter	—
	U928	Checking/clearing the machine life counts	—
	U990	Checking/clearing the time for the exposure lamp to light	—
	U991	Checking the scanner count	—
	U993	Outputting a VTC-PG pattern	—

(3) Contents of maintenance mode items

<table>
<tr><th>Maintenance item No.</th><th>Description</th></tr>
<tr><td>U000</td><td>
Outputting an own-status report
Description
Outputs lists of the current settings of the maintenance items, and paper jam and service call occurrences.
Purpose
To check the current setting of the maintenance items, or paper jam or service call occurrences.
Before initializing the backup RAM, output a list of the current settings of the maintenance items to reenter the settings after initialization or replacement.
Method
1. Press the start key. A selection item appears.
2. Select the item to be output using the copy exposure adjustment keys.
<table>
<tr><th>Display</th><th>Output list</th></tr>
<tr><td>d-L
J-L
C-L</td><td>List of the current settings of the maintenance modes
List of the paper jam occurrences
List of the service call occurrences</td></tr>
</table>
3. Press the start key. The test copy mode is entered and a list is output.
When A4/11" $\times 8^1/_2$" paper is available, a report of this size is output. If not, specify the paper feed location.
When output is complete, the selected item appears.
Completion
Press the stop/clear key while a selection item is displayed. The indication for selecting a maintenance item No. appears.
</td></tr>
<tr><td>U001</td><td>
Exiting the maintenance mode
Description
Exits the maintenance mode and returns to the normal copy mode.
Purpose
To exit the maintenance mode.
Method
Press the start key. The normal copy mode is entered.
</td></tr>
<tr><td>U004</td><td>
Checking the machine number
Description
Displays the machine number.
Purpose
To check the machine number.
Method
1. Press the start key. The currently set machine number is displayed.
2. Change the indication of the copy quantity display by lighting a copy exposure indicator using the copy exposure adjustment keys.
<table>
<tr><th>Copy exposure indicator</th><th>Copy quantity display</th></tr>
<tr><td>Exp. 1 (lit)
Exp. 2 (lit)
Exp. 3 (lit)
Exp. 4 (lit)
Exp. 5 (lit)
Exp. 1 (flashing)
Exp. 2 (flashing)
Exp. 3 (flashing)
Exp. 4 (flashing)
Exp. 5 (flashing)</td><td>1st digit of machine number
2nd digit of machine number
3rd digit of machine number
4th digit of machine number
5th digit of machine number
6th digit of machine number
7th digit of machine number
8th digit of machine number
9th digit of machine number
10th digit of machine number</td></tr>
</table>
Completion
Press the stop/clear key. The indication for selecting a maintenance item No. appears.
</td></tr>
</table>

<table>
<tr><th>Maintenance item No.</th><th>Description</th></tr>
<tr><td>U005</td><td>
Copying without paper
Description
Simulates the copy operation without paper feed.
Purpose
To check the overall operation of the machine.
Method
1. Press the start key. A selection item appears.
2. Select the item to be operated using the copy exposure adjustment keys.
<table>
<tr><th>Display</th><th>Operation</th></tr>
<tr><td>P
P-d</td><td>Only the copier operates.
Both the copier and DP operate.</td></tr>
</table>
3. Press the interrupt key.
4. Set the operation conditions required. Changes in the following settings can be made.
• Paper feed locations
• Magnifications
• Number of copies: continuous copying is performed when set to 250.
• Copy density
• Keys on the operation panel other than the energy saver (preheat) key
5. To control the paper feed pulley, remove all the paper in the drawers, or the drawers. With the paper present, the paper feed pulley does not operate.
6. Press the start key. The operation starts.
Copy operation is simulated without paper under the set conditions. When operation is complete, the selected item appears.
7. To stop continuous operation, press the stop/reset key.
Completion
Press the stop/clear key while a selection item is displayed. The indication for selecting a maintenance item No. appears.
</td></tr>
<tr><td>U019</td><td>
Displaying the ROM version
Description
Displays the part number of the ROM fitted to each board.
Purpose
To check the part number or to decide if the ROM version is new from the last digit of the number.
Method
1. Press the start key. A selection item appears.
2. Select the item to be displayed using the image mode selection key and copy exposure adjustment keys.
<table>
<tr><th>Image mode LEDs</th><th>Copy exposure indicator</th><th>Copy quantity display</th></tr>
<tr><td>○ Text & Photo
○ Photo
● Text</td><td>Exp. 1
Exp. 2</td><td>number of the main ROM
number of the main ROM sub</td></tr>
<tr><td>○ Text & Photo
● Photo
● Text</td><td>Exp. 1
Exp. 2</td><td>number of the engine ROM
number of the engine ROM sub</td></tr>
<tr><td>● Text & Photo
● Photo
● Text</td><td>Exp. 1
Exp. 2
Exp. 3</td><td>number of the first paper feeder ROM
number of the second paper feeder ROM
number of the third paper feeder ROM</td></tr>
<tr><td>● Text & Photo
● Photo
☼ Text</td><td>Exp. 1</td><td>number of the DP ROM</td></tr>
</table>
○ : Off, ● : On, ☼: Flashing
Completion
Press the stop/clear key. The indication for selecting a maintenance item No. appears.
</td></tr>
</table>

<table>
<tr><th>Maintenance item No.</th><th>Description</th></tr>
<tr><td>U020</td><td>
Initializing all data
Description
Initializes all the backup RAM on the main board to return to the original settings.
Purpose
Run as needed.
Method
1. Press the start key.
2. Select “on” using the zoom +/– keys.
<table>
<tr><th>Display</th><th>Operation</th></tr>
<tr><td>– – –
on</td><td>Canceling initialization
Executing initialization</td></tr>
</table>
3. Press the start key. All data in the backup RAM is initialized, and the original settings for Japan specifications are set.
When initialization is complete, the machine automatically returns to the same status as when the main switch is turned on.
Completion
To exit this maintenance item without executing initialization, press the stop/clear key. The indication for selecting a maintenance item No. appears.
</td></tr>
<tr><td>U021</td><td>
Initializing memories
Description
Initializes the setting data other than that for adjustments due to variations between respective machines, i.e., settings for counters, service call history and mode settings. As a result, initializes the backup RAM according to the specifications depending on the destination selected in U252.
Purpose
Used to return the machine settings to the factory settings.
Method
1. Press the start key.
2. Select “on” using the zoom +/– keys.
<table>
<tr><th>Display</th><th>Operation</th></tr>
<tr><td>– – –
on</td><td>Canceling initialization
Executing initialization</td></tr>
</table>
3. Press the start key. All data other than that for adjustments due to variations between machines is initialized based on the destination setting. When initialization is complete, the machine automatically returns to the same status as when the main switch is turned on.
Completion
To exit this maintenance item without executing initialization, press the stop/clear key. The indication for selecting a maintenance item No. appears.
</td></tr>
</table>

<table>
<tr><th>Maintenance item No.</th><th>Description</th></tr>
<tr><td>U030</td><td>
Checking motor operation
Description
Drives each motor.
Purpose
To check the operation of each motor.
Method
1. Press the start key. A selection item appears.
2. Select the motor to be operated using the copy exposure adjustment keys.
<table>
<tr><th>Display</th><th>Motor</th></tr>
<tr><td>A</td><td>Drive motor (DM)</td></tr>
<tr><td>2F</td><td>Registration motor (RM)</td></tr>
<tr><td>F1</td><td>Drawer drive motor 1 (DDM1)*</td></tr>
<tr><td>F2</td><td>Drawer drive motor 2 (DDM2)*</td></tr>
<tr><td>F3</td><td>Drawer drive motor 3 (DDM3)*</td></tr>
<tr><td>EJ1</td><td>Exit motor (EM) forward rotation</td></tr>
<tr><td>EJ2</td><td>Exit motor (EM) reverse rotation</td></tr>
</table>
*: Optional
3. Press the start key. The selected motor operates.
4. To stop operation, press the stop/reset key.
Completion
Press the stop/clear key after operation stops. The indication for selecting a maintenance item No. appears.
</td></tr>
<tr><td>U031</td><td>
Checking switches for paper conveying
Description
Displays the on-off status of each paper detection switch on the paper path.
Purpose
To check if the switches for paper conveying operate correctly.
Method
1. Press the start key.
2. Turn each switche on and off manually to check the status. When the on-status of a switch is detected, the original size indicator corresponding to the operated switch lights.
<table>
<tr><th>Original size indicator</th><th>Switch</th></tr>
<tr><td>A3R/Ledger</td><td>Exit switch (ESW)</td></tr>
<tr><td>A5R/Legal</td><td>Registration switch (RSW)</td></tr>
<tr><td>A4/Letter-R</td><td>Drawer feed switch 1 (DFSW1)*</td></tr>
<tr><td>B4R/Letter</td><td>Drawer feed switch 2 (DFSW2)*</td></tr>
<tr><td>B5R/Statement</td><td>Feedshift switch (FSSW)</td></tr>
<tr><td>Folio/U</td><td>Duplex paper conveying switch (DUPPCSW)*</td></tr>
</table>
*: Optional
Completion
Press the stop/clear key. The indication for selecting a maintenance item No. appears.
</td></tr>
</table>

<table>
<tr><th>Maintenance item No.</th><th>Description</th></tr>
<tr><td>U032</td><td>
Checking clutch operation
Description
Turns each clutch on.
Purpose
To check the operation of each clutch.
Method
1. Press the start key. A selection item appears.
2. Select the clutch to be operated using the copy exposure adjustment keys.
3. Press the start key. The selected clutch turns on for 1 s.
<table>
<tr><th>Display</th><th>Clutch</th></tr>
<tr><td>P1
Pb
F1
F2
F3</td><td>Paper feed clutch (PFCL)
Bypass paper feed clutch (BYPPFCL)
Drawer paper feed clutch 1 (DPFCL1)*
Drawer paper feed clutch 2 (DPFCL2)*
Drawer paper feed clutch 3 (DPFCL3)*</td></tr>
</table>
*: Optional
Completion
Press the stop/clear key. The indication for selecting a maintenance item No. appears.
</td></tr>
<tr><td>U034</td><td>
Adjusting the print start timing
Adjustment
See pages 1-6-12 and 14.
</td></tr>
<tr><td>U035</td><td>
Setting folio size
Description
Changes the image area for copying onto folio size paper.
Purpose
To prevent the image at the trailing edge, or right or left side of the paper from not being copied by setting the actual size of the folio paper used.
Method
Press the start key.
Setting
1. Select the item to be set using the copy exposure adjustment keys.
2. Change the setting using the zoom +/– keys.
<table>
<tr><th>Copy exposure indicator</th><th>Setting</th><th>Setting range</th><th>Initial setting</th></tr>
<tr><td>Exp. 1
Exp. 2</td><td>Length
Width</td><td>330 to 356 mm
200 to 220 mm</td><td>330
210</td></tr>
</table>
3. Press the start key. The value is set.
Completion
Press the stop/clear key. The screen for selecting a maintenance item No. is displayed.
</td></tr>
<tr><td>U051</td><td>
Adjusting the amount of slack in the paper
Adjustment
See page 1-6-16.
</td></tr>
</table>

<table>
<tr><th>Maintenance item No.</th><th>Description</th></tr>
<tr><td>U053</td><td>
Performing fine adjustment of the motor speed
Description
Performs fine adjustment of the speeds of the motors.
Purpose
Used to adjust the speed of the respective motors when the magnification is not correct. Also speed adjustment for each paper source can be performed in group 2.
Method
Press the start key.
Setting
1. Select the group to be set or checked by lighting image mode LEDs using the image mode selection key.
2. Select the item by lighting a copy exposure indicator using the copy exposure adjustment keys.
3. Change the setting using the zoom +/– keys.
<table>
<tr><th>Image mode LED</th><th>Copy exposure indicator</th><th>Description</th><th>Setting range</th><th>Initial setting</th></tr>
<tr><td>○ Text & Photo
○ Photo
● Text</td><td>Exp. 1
Exp. 2
Exp. 3
Exp. 4</td><td>Drive motor speed adjustment
Polygon motor speed adjustment
Exit motor speed adjustment
Registration motor speed adjustment</td><td>–5.0 to +5.0
–5.0 to +5.0
–5.0 to +5.0
–5.0 to +5.0</td><td>0
0
0
0</td></tr>
<tr><td>○ Text & Photo
● Photo
● Text</td><td>Exp. 1

Exp. 2

Exp. 3</td><td>Motor speed adjustment (for paper feed from bypass tray)
Motor speed adjustment (for paper feed from optional paper feeder)
Motor speed adjustment (in duplex mode)</td><td>–5.0 to +5.0

–5.0 to +5.0

–5.0 to +5.0</td><td>0

0

0</td></tr>
</table>
Drive motor speed adjustment (unit: %)
Increasing the setting makes the image longer in the auxiliary scanning direction, and decreasing it makes the image shorter in the auxiliary scanning direction.
Polygon motor speed adjustment (unit: %)
Increasing the setting makes the image longer in the main scanning direction and shorter in the auxiliary scanning direction; decreasing the setting makes the image shorter in the main scanning direction and longer in the auxiliary scanning direction.
4. Press the start key. The value is set.
Interrupt copy mode
While this maintenance item is being performed, a VTC pattern shown below is output in interrupt copy mode. Correct values for an A3/11" × 17" output are:
Ⓐ = 300 ± 1.5 mm
Ⓑ = 270 ± 1.35 mm
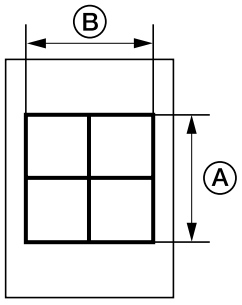

Figure 1-4-1
Adjustment
1. Output an A3/11" × 17" VTC pattern in interrupt mode.
2. Measure Ⓐ and Ⓑ on the VTC pattern (Figure 1-4-1), and perform the following adjustments if they are different from the correct sizes:
Ⓐ: Drive motor speed adjustment
Ⓑ: Polygon motor speed adjustment
Completion
Press the stop/clear key while a selection item is displayed. The indication for selecting a maintenance item No. appears.
</td></tr>
</table>

<table>
<tr><th>Maintenance item No.</th><th>Description</th></tr>
<tr><td>U060</td><td>
Adjusting the scanner input properties
Description
Adjusts the image scanning density.
Purpose
Used when the entire image appears too dark or light.
Method
Press the start key.
Setting
1. Change the setting using the zoom +/– keys.
<table>
<tr><th>Description</th><th>Setting range</th><th>Initial setting</th></tr>
<tr><td>Image scanning density</td><td>0 to 23</td><td>12</td></tr>
</table>
Increasing the setting makes the density lower, and decreasing it makes the density higher.
2. Press the start key. The value is set.
Test copy mode
While this maintenance item is being performed, copying from an original can be made in test copy mode.
Completion
Press the stop/clear key. The indication for selecting a maintenance item No. appears.
Caution
The following settings are also reset to the initial values by performing this maintenance item:
• Exposure density gradient set in maintenance mode (U093)
• Exposure set in the copy default item of the copier management mode
</td></tr>
<tr><td>U061</td><td>
Turning the exposure lamp on
Description
Turns the exposure lamp on.
Purpose
To check the exposure lamp.
Method
1. Press the start key. “on” appears.
2. Press the start key. The exposure lamp lights.
3. To turn the exposure lamp off, press the stop/clear key.
Completion
Press the stop/clear key. The indication for selecting a maintenance item No. appears.
</td></tr>
</table>

<table>
<tr><th>Maintenance item No.</th><th>Description</th></tr>
<tr><td>U063</td><td>
Adjusting the shading position
Description
Changes the shading position.
Purpose
Used when white lines continue to appear longitudinally on the image after the shading plate is cleaned. This is due to flaws or stains inside the shading plate. To prevent this problem, the shading position should be changed so that shading is possible without being affected by the flaws or stains.
Method
1. Press the start key.
2. Change the setting using the zoom +/– keys.
<table>
<tr><th>Description</th><th>Setting range</th><th>Initial setting</th><th>Change in value per step</th></tr>
<tr><td>Shading position</td><td>–5 to +5</td><td>0</td><td>0.17 mm</td></tr>
</table>
Increasing the setting moves the shading position toward the machine left, and decreasing it moves the position toward the machine right.
3. Press the start key. The value is set.
Test copy mode
While this maintenance item is being performed, copying from an original can be made in test copy mode.
Completion
Press the stop/clear key. The indication for selecting a maintenance item No. appears.
</td></tr>
<tr><td>U065</td><td>
Adjusting the scanner magnification
Adjustment
See pages 1-6-28 and 29.
</td></tr>
<tr><td>U066</td><td>
Adjusting the leading edge registration for scanning an original on the contact glass
Adjustment
See page 1-6-30.
</td></tr>
<tr><td>U067</td><td>
Adjusting the center line for scanning an original on the contact glass
Adjustment
See page 1-6-31.
</td></tr>
<tr><td>U068</td><td>
Adjusting the scanning position for originals from the DP
Description
Adjusts the position for scanning originals from the DP.
Purpose
Used when there is a regular error between the leading edges of the original and the copy image when the DP is used.
Method
Press the start key.
Setting
1. Change the setting using the zoom +/– keys.
<table>
<tr><th>Description</th><th>Setting range</th><th>Initial setting</th><th>Change in value per step</th></tr>
<tr><td>Scanning position</td><td>–17 to +17</td><td>0</td><td>0.254 mm</td></tr>
</table>
Increasing the setting moves the image backward, and decreasing it moves the image forward.
2. Press the start key. The value is set.
Completion
Press the stop/clear key. The indication for selecting a maintenance item No. appears.
</td></tr>
</table>

Maintenance item No.	Description
U070	**Adjusting the DP magnification** **Description** Adjusts the DP original scanning speed. **Purpose** To be executed if the correct magnification is not obtained in the auxiliary scanning direction when the optional DP is used. **Caution** Before making this adjustment, ensure that the following adjustments have been made in maintenance mode. U053 → U065 → U070 **Method** Press the start key. **Setting** 1. Change the setting using the zoom +/– keys. Increasing the setting makes the image longer, and decreasing it makes the image shorter. 2. Press the start key. The value is set. **Interrupt copy mode** While this maintenance item is being performed, copying from an original can be made in interrupt copy mode. **Completion** Press the stop/clear key. The indication for selecting a maintenance item No. appears.

Description	Setting range	Initial setting	Change in value per step
Original conveying motor speed	–25 to +25	0	0.1%

Maintenance item No.	Description
U071	**Adjusting the DP scanning timing** **Description** Adjusts the DP original scanning timing. **Purpose** To be executed if there is a regular error between the leading or trailing edges of the original and the copy image when the optional DP is used. **Caution** Before making this adjustment, ensure that the following adjustments have been made in maintenance mode. U034 → U066 → U071 **Method** Press the start key. **Setting** 1. Select the item by lighting a copy exposure indicator using the copy exposure adjustment keys. 2. Change the setting using the zoom +/– keys.

Copy exposure indicator	Description	Setting range	Initial setting	Change in value per step
Exp. 1	DP leading edge registration	–32 to +32	0	0.254 mm
Exp. 2	DP trailing edge registration	–42 to +32	0	0.254 mm

Decreasing the setting moves the copy image backward, and increasing it moves the copy image forward.

3. Press the start key. The value is set.

Interrupt copy mode
While this maintenance item is being performed, copying from an original can be made in interrupt copy mode.

Adjustment
1. In interrupt copy mode, make a copy using the DP.
2. Check the copy image and adjust the registration as follows.
   For copy example 1, decrease the setting of exp.1.
   For copy example 2, increase the setting of exp.1.



Figure 1-4-2

Completion
Press the stop/clear key while a selection item is displayed. The indication for selecting a maintenance item No. appears.

Maintenance item No.	Description
U072	**Adjusting the DP center line** **Description** Adjusts the scanning start position for the DP original. **Purpose** To be executed if there is a regular error between the centers of the original and the copy image when the optional DP is used. **Caution** Before making this adjustment, ensure that the following adjustments have been made in maintenance mode. U034 → U067 → U072 **Method** Press the start key. **Setting** 1. Change the setting using the zoom +/– keys.

Description	Setting range	Initial setting	Change in value per step
DP center line	–6.6 to +6.6	0.0	0.1 mm

Increasing the setting moves the image to the right, and decreasing it moves the image to the left.

2. Press the start key. The value is set.

Interrupt copy mode
While this maintenance item is being performed, copying from an original can be made in interrupt copy mode.

Adjustment
1. In interrupt copy mode, make a copy using the DP.
2. Check the copy image and adjust the center line as follows.
   For copy example 1, increase the setting.
   For copy example 2, decrease the setting.

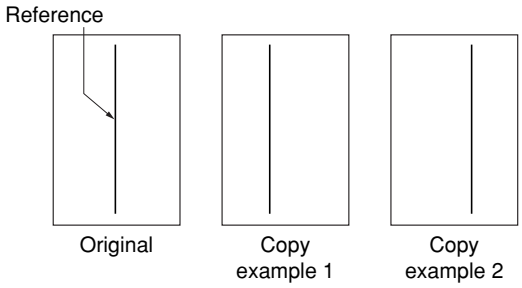

Figure 1-4-3

Completion
Press the stop/clear key. The indication for selecting a maintenance item No. appears.

<table>
<tr><th>Maintenance item No.</th><th>Description</th></tr>
<tr><td>U073</td><td>
Checking scanner operation
Description
Simulates the scanner operation under arbitrary conditions.
Purpose
To check scanner operation.
Method
1. Press the start key.
2. Select the item to be changed by lighting a copy exposure indicator using the copy exposure adjustment keys.
3. Change the setting using the zoom +/– keys.
<table>
<tr><th>Copy exposure indicator</th><th>Operating conditions</th><th>Setting range</th></tr>
<tr><td>Exp. 1
Exp. 2
Exp. 3</td><td>Magnification
Paper size
On and off of the exposure lamp</td><td>50 to 200%
See below.
on or off</td></tr>
</table>
Paper size for each setting
<table>
<tr><th>Setting</th><th>Paper size</th><th>Setting</th><th>Paper size</th></tr>
<tr><td>8
9
24
36
39
40
41</td><td>A4
B5
11" × 8 1/2"
A3
B4
A4R
B5R</td><td>42
47
52
53
55
56
58</td><td>A5R
Folio
11" × 17"
11" × 15"
8 1/2" × 14"
8 1/2" × 11"
5 1/2" × 8 1/2"</td></tr>
</table>
4. Press the interrupt key.
5. Press the start key. Scanning starts under the selected conditions.
6. To stop operation, press the stop/clear key.
Completion
Press the stop/clear key when scanning stops. The indication for selecting a maintenance item No. appears.
</td></tr>
<tr><td>U074</td><td>
Adjusting the DP input light luminosity
Description
Adjusts the luminosity of the exposure lamp for scanning originals from the DP.
Purpose
Used if the exposure amount differs significantly between when scanning an original on the contact glass and when scanning an original from the DP.
Method
Press the start key.
Setting
1. Change the setting using the zoom +/– keys.
<table>
<tr><th>Description</th><th>Setting range</th><th>Initial setting</th></tr>
<tr><td>DP input light luminosity</td><td>0 to 8</td><td>1</td></tr>
</table>
Increasing the setting makes the luminosity higher, and decreasing it makes the luminosity lower.
2. Press the start key. The value is set.
Test copy mode
While this maintenance item is being performed, copying from an original can be made in test copy mode.
Completion
Press the stop/clear key. The indication for selecting a maintenance item No. appears.
</td></tr>
</table>

Maintenance item No.	Description
U087	**Turning the DP scanning position adjust mode on/off** **Description** Turns on or off the DP scanning position adjust mode, in which the DP original scanning position is adjusted automatically by determining the presence or absence of dust on the slit glass. Also changes the reference data for identifying dust. **Reference** In the DP original scanning position adjust mode, the presence or absence of dust is determined by comparing the scan data of the original trailing edge and that taken after the original is conveyed past the DP original scanning position. If dust is identified, the DP original scanning position is adjusted for the following originals. **Purpose** Used to prevent appearance of black lines due to dust adhering in the original scanning position on the slit glass when the DP is used. **Method** 1. Press the start key. 2. Select the item to be set by lighting a copy exposure indicator using the copy exposure adjustment keys.

Copy exposure indicator	Description
Exp. 1	Setting the mode on/off
Exp. 2	Setting the reference data for identifying dust

Setting the mode on/off

1. Select “on” or “oFF” using the zoom +/– keys.

Display	Description
on	DP scanning position adjust mode on
oFF	DP scanning position adjust mode off

Initial setting: on

2. Press the start key. The setting is set.

Setting the reference data for identifying dust

Available only when the mode is turned on.

1. Change the setting using the zoom +/– keys.

Description	Setting range	Initial setting
Minimum density to be regarded as dust	10 to 95	35

Example

The figure indicates the density in 256 levels of gray (0: white, 255: black). When the setting is 35, data of the level of 35 or higher is regarded as dust and data of lower level is regarded as the background (scan data taken when there is no original).

2. Press the start key. The value is set.

Completion

Press the stop/clear key while a selection item is displayed. The indication for selecting a maintenance item No. appears.

<table>
<tr><th>Maintenance item No.</th><th>Description</th></tr>
<tr><td>U088</td><td>
Setting the input filter (moiré reduction mode)
Description
Turns moiré reduction mode on and off by switching the input filter on and off.
Purpose
Used to prevent regular density unevenness (moiré) on halftone image areas of the copy image in text mode and text and photo mode. Such moiré is more likely to appear when an enlargement or reduction copy is made in text mode from an original containing large halftone image areas.
Method
Press the start key.
Setting
1. Select “on” or “oFF” using the zoom +/– keys.
<table>
<tr><th>Display</th><th>Description</th></tr>
<tr><td>on
oFF</td><td>Moiré reduction mode
Normal copy mode</td></tr>
</table>
Initial setting: oFF
If moiré on the copy image is significant, change the setting to “on”. Note that when the moiré reduction mode is turned on, the resolution may be slightly reduced.
2. Press the start key. The value is set. The indication for selecting a maintenance item No. appears.
Completion
To exit this maintenance item without changing the current setting, press the stop/clear key. The indication for selecting a maintenance item No. appears.
</td></tr>
<tr><td>U089</td><td>
Outputting a MIP-PG pattern
Description
Selects and outputs a MIP-PG pattern created in the copier.
Purpose
When performing respective image printing adjustments, used to check the machine status apart from that of the scanner with a non-scanned output MIP-PG pattern.
Method
1. Press the start key.
2. Select the MIP-PG pattern to be output using the copy exposure adjustment keys.
<table>
<tr><th>Display</th><th>Setting</th><th>Setting range</th><th>Initial setting</th></tr>
<tr><td>G-S
0
FFL
1-d</td><td>Gray scale
Mono level
256 level
1-dot level</td><td>-
0 to 255
-
-</td><td>-
0
-
-</td></tr>
</table>
3. Press the interrupt key. The machine enters the PG pattern output mode.
4. Press the start key. A MIP-PG pattern is output.
Completion
Press the stop/clear key. The indication for selecting a maintenance item No. appears.
</td></tr>
</table>

Maintenance item No.	Description
U091	**Checking shading**

Description

Performs scanning under the same conditions as before and after shading is performed, displaying the original scanning values at nine points of the contact glass.

Purpose

To check the change in original scanning values before and after shading. The results may be used to decide the causes for fixing unevenness (uneven density) of the gray area of an image: either due to optical (shading or CCD) or other problems.
Also to check the causes for a white or black line appearing longitudinally.

Method

1. Press the start key. A selection item appears.
2. Select the item to be operated using the zoom +/– keys.

Display	Operation
on	Performs scanning before shading and displays the result.
oFF	Performs scanning after shading and displays the result.

3. Press the start key. Scanning is performed under the selected conditions and the result is displayed.
4. Change the measurement point by lighting a copy exposure indicator or making one flash using the copy exposure adjustment keys. For the correspondence between the measurement points and the copy exposure indicators, see Figure 1-4-4.

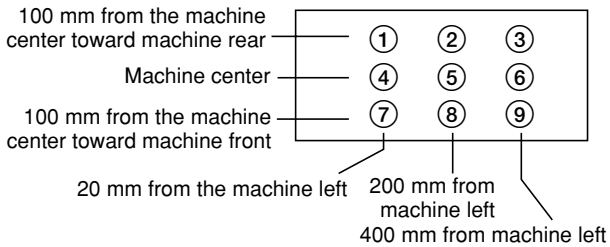

Point	Copy exposure indicator	Point	Copy exposure indicator
①	exp. 1 (lit)	⑥	exp. 1 (flashing)
②	exp. 2 (lit)	⑦	exp. 2 (flashing)
③	exp. 3 (lit)	⑧	exp. 3 (flashing)
④	exp. 4 (lit)	⑨	exp. 4 (flashing)
⑤	exp. 5 (lit)		

Figure 1-4-4

When scanning is performed before shading, the scan value at the machine center should be slightly different from those at the machine front and rear. When scanning is performed after shading, there should be no difference between respective values. Any differences between the values at machine front and rear indicates that scanner problem causes the fixing unevenness.
If the displayed results indicate no shading problems, the fixing unevenness (uneven copy density) is caused by factors other than in the scanner section (shading or CCD).
If a black line appears, the cause may be assumed based on the results of the scanning operation before shading: if a white line appears, they may be assumed based on the results of the scanning operation after shading. Note that depending on the thickness and location of the black or white line, it may not be possible to use this method to determine the cause. This is because the displayed values obtained from scanning at the limit of nine points are insufficient to provide significant information.

5. Press the stop/clear key. The selected item appears.

Completion

Press the stop/clear key while a selection item is displayed. The indication for selecting a maintenance item No. appears.

Maintenance item No.	Description
U092	**Adjusting the scanner automatically** **Description** Makes auto scanner adjustments in the order below using the specified original. • Adjusting the scanner center line (U067) • Adjusting the scanner leading edge registration (U066) • Adjusting scanner magnification in the auxiliary direction (U065) When this maintenance item is performed, the settings in U065, U066 and U067 are also changed. **Purpose** Used to make respective auto adjustments for the scanner. **Method** 1. Place the specified original (P/N: 2AC68240) on the contact glass. 2. Press the start key. “on” appears. 3. Press the start key. Auto adjustment starts. When adjustment is complete, “Gd” appears. 4. Display each setting value after adjustment by lighting a copy exposure indicator using the copy exposure adjustment keys.

Copy exposure indicator	Setting value
Exp. 1	Scanner center line
Exp. 2	Scanner leading edge registration
Exp. 3	Scanner magnification in the auxiliary scanning direction

If a problem occurs during auto adjustment, “nG” is displayed and operation stops. Lighting the copy exposure indicator exp. 2 and then exp. 3 using the copy exposure adjustment keys will display the error code. Determine the details of the problem and either repeat the procedure from the beginning, or adjust the remaining items manually by running the corresponding maintenance items.

Completion

Press the stop/clear key after auto adjustment is complete. The indication for selecting a maintenance item No. appears.

If the stop/clear key is pressed during auto adjustment, adjustment stops and no settings are changed.

Maintenance item No.	Description

U093 **Setting the exposure density gradient**

Description

Changes the exposure density gradient in manual density mode, depending on respective image modes (text, text and photo, photo).

Purpose

To set how the image density is altered by a change of one step in the manual density adjustment. Also used to make copy image darker or lighter.

Start

1. Press the start key. A selection item appears.
2. Select the image mode to be adjusted by lighting image mode LEDs using the image mode selection key.

Image mode LEDs	Description
○ Text & Photo ○ Photo ● Text	Density in text mode
○ Text & Photo ● Photo ● Text	Density in text and photo mode
● Text & Photo ● Photo ● Text	Density in photo mode

○ : Off, ● : On

Setting

1. Select the item to be adjusted by lighting a copy exposure indicator using the copy exposure adjustment keys.
2. Adjust the setting using the zoom +/– keys.

Copy exposure indicator	Description	Setting range	Initial setting
Exp. 1	Change in density when manual density is set dark	0 to 3	0
Exp. 2	Change in density when manual density is set light	0 to 3	0

Increasing the setting makes the change in density larger, and decreasing it makes the change smaller.

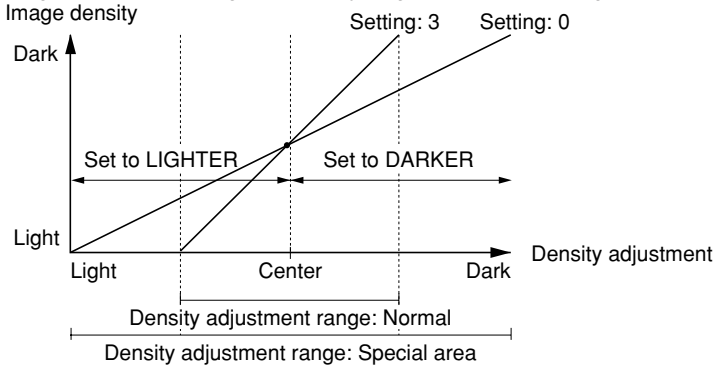

Figure 1-4-5 Exposure density gradient

3. Press the start key. The value is set.

Test copy mode

While this maintenance item is being performed, copying from an original can be made in test copy mode.

Completion

Press the stop/clear key. The indication for selecting a maintenance item No. appears.

Maintenance item No.	Description
U099	**Checking the original size detection**

Description

Displays the original width detection data and sets the original width detection threshold.

Purpose

To check the original width detection. Also to change the original size detection threshold if the size of the original on the contact glass is detected incorrectly.

Start

1. Press the start key. A selection item appears.
2. Select the item using the zoom +/– keys.
3. Press the start key. The machine enters the execution mode.

Display	Description
dA	Checking the original width detection data
LE	Setting or checking the original width detection threshold

Method to display the original width detection data

1. Place an original on the contact glass and turn the original detection switch on. The exposure lamp turns on and the width of the original is detected. The scanner data taken at the nine points from (1) at the machine rear to (9) at the machine front is displayed.
   The data is displayed within the range of 000 to 255, 000 indicating white (original present) and 255 indicating black (no original).
2. Change the point to display the detection data by lighting a copy exposure indicator or making one flash using the copy exposure adjustment keys. For the correspondence between the detection point and the copy exposure indicators, see Figure 1-4-6.

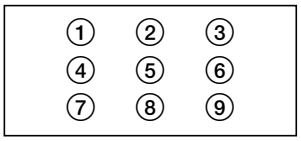

Point	Copy exposure indicator	Point	Copy exposure indicator
①	exp. 1 (lit)	⑥	exp. 1 (flashing)
②	exp. 2 (lit)	⑦	exp. 2 (flashing)
③	exp. 3 (lit)	⑧	exp. 3 (flashing)
④	exp. 4 (lit)	⑨	exp. 4 (flashing)
⑤	exp. 5 (lit)		

Figure 1-4-6

3. Press the stop/clear key. The selected item appears.

Maintenance item No.	Description

U099 (cont.)

Method to set or check the original size detection threshold

1. Place an original on the contact glass and turn the original detection switch on. The original size detection starts and detection data is displayed.
2. Change the detection item by lighting a copy exposure indicator using the copy exposure adjustment keys.

Copy exposure indicator	Description	Data range	Remarks	Initial setting
Exp. 1	Scanner data threshold	0 to 255	Adjustable	170
Exp. 2	Time between original detection switch turning on and reading-in of scanner data	0 to 100 ms	Adjustable	50
Exp. 3	Detected original width	0 to 350 mm		———
Exp. 4	Original size detected by scanner data and original size sensor detection data	0 to 63*		———

* See Paper size in U073 for the paper size for each setting.

3. To change the original size detection threshold, light exp. 1 or 2 and change the setting using the zoom +/– keys.
4. Press the start key. The value is set.
5. Press the stop/clear key. The selected item appears.

Completion

Press the stop/clear key while a selection item is displayed. The indication for selecting a maintenance item No. appears.

U100

Setting the main high voltage

Description

Changes the surface potential by changing the grid control voltage. Also performs main charging. Also changes the setting of main charging copy quantity correction.

Purpose

To set the surface potential or check main charging. Also used when reentering data after initializing the set data.

Start

1. Press the start key. A selection item appears.
2. Select the item using the copy exposure adjustment keys.

Copy exposure indicator	Description
Exp. 1 (lit)	Changing the grid control voltage
Exp. 2 (lit)	Turning the main charger on
Exp. 3 (lit)	Turning the main charger on and the laser scanner unit on and off
Exp. 4 (lit)	Main charging copy quantity correction, copy interval
Exp. 5 (lit)	Main charging copy quantity correction, copy quantity
Exp. 1 (flashing)	Main charging copy quantity correction, correction amount

Method for main charger output

1. Press the start key. The selected operation starts.
2. To stop operation, press the stop/clear key.

Setting the grid control voltage

1. Change the setting using the zoom +/– keys.

Description	Setting range	Initial setting
Grid control voltage	0 to 255	135

Increasing the setting makes the surface potential higher, and decreasing it makes the potential lower.
Change in value per step: approximately 3.6 V

2. Press the start key. The value is set.

<table>
<tr><th>Maintenance item No.</th><th>Description</th></tr>
<tr><td>U100 (cont.)</td><td>
Setting the main charging copy quantity correction
1. Change the setting using the zoom +/– keys.
<table>
<tr><th>Display</th><th>Setting</th><th>Setting range</th><th>Initial setting</th></tr>
<tr><td>Exp. 4 (lit)
Exp. 5 (lit)
Exp. 1 (flashing)</td><td>Copy interval
Copy quantity
Correction amount</td><td>1 to 255 (minute)
1 to 255 (10 sheets)
0 to 50 (bit)</td><td>60
50
10</td></tr>
</table>
* Copy interval: Sets the time interval from the previous copying. If the time from the previous copying exceeds this preset value, the copy quantity counter will be reset.
Copy quantity: Sets the copy quantity from which copy quantity correction starts. When the copy quantity counter reaches this preset value, correction will start.
Correction amount: Sets the correction amount for copy quantity correction.
* Set the values in the range from 5 to 120 minutes for copy interval, from 10 to 2,000 sheets for copy quantity, and from 5 to 50 bits for correction amount.
2. Press the start key. The value is set.
Completion
Press the stop/clear key when main charger output stops while a selection item is displayed. The indication for selecting a maintenance item No. appears.
</td></tr>
<tr><td>U101</td><td>
Setting the other high voltages
Description
Changes the developing bias clock, the transfer and separation charging output timing.
Purpose
To check the developing bias clock, the transfer and separation charging output timing. Do not change the preset value.
Method
Press the start key. A selection item appears.
Setting
1. Select the group to be set or checked by lighting image mode LEDs using the image mode selection key.
2. Select the item to be set by lighting a copy exposure indicator using the copy exposure adjustment keys.
<table>
<tr><th>Image mode LED</th><th>Copy exposure indicator</th><th>Description</th><th>Setting range</th><th>Initial setting</th></tr>
<tr><td>○ Text & Photo
○ Photo
● Text</td><td>Exp. 1 (lit)
Exp. 2 (lit)
Exp. 3 (lit)
Exp. 4 (lit)
Exp. 5 (lit)
Exp. 1 (flashing)</td><td>Developing bias clock frequency
Developing bias clock duty
Transfer control voltage (large size)
Transfer control voltage (small size)
Transfer charging output OFF timing
Transfer charging output ON timing</td><td>2 to 255
1 to 99
0 to 255
0 to 255
0 to 255
0 to 255</td><td>27
45
168
179
38
34</td></tr>
<tr><td>○ Text & Photo
● Photo
● Text</td><td>Exp. 1 (lit)
Exp. 2 (lit)
Exp. 3 (lit)</td><td>Separation control voltage
Separation charging output ON timing
Separation charging output OFF timing</td><td>0 to 255
0 to 255
0 to 255</td><td>1
33
43</td></tr>
</table>
3. Change the setting using the zoom +/– keys.
4. Press the start key. The value is set.
Completion
Press the stop/clear key while a selection item is displayed. The indication for selecting a maintenance item No. appears.
</td></tr>
</table>

<table>
<tr><th>Maintenance item No.</th><th>Description</th></tr>
<tr><td>U110</td><td>
Checking/clearing the drum count
Description
Displays the drum counts for checking, clearing or changing a figure.
Purpose
To check the drum status. Also used to clear the count after replacing the drum during regular maintenance. Since the count was cleared before shipping, do not clear it when installing. A drum count value less than 150K, however, cannot be cleared.
Method
1. Press the start key.
2. Select the item by lighting a copy exposure indicator using the copy exposure adjustment keys.
<table>
<tr><th>Copy exposure indicator</th><th>Description</th><th>Setting range</th><th>Initial setting</th></tr>
<tr><td>Exp. 1
Exp. 2
Exp. 3</td><td>First 3 digits
Last 3 digits
Clearing the count</td><td>000 to 999
000 to 999
———</td><td>000
000
———</td></tr>
</table>
Clearing
1. Light exp. 3.
2. Press the start key. The count is cleared, and the indication for selecting a maintenance item No. appears.
Setting
1. Change the count using the numeric or zoom +/– keys.
2. Press the start key. The count is set, and the indication for selecting a maintenance item No. appears.
Completion
To exit the maintenance mode without changing the count, press the stop/clear key. The indication for selecting a maintenance item No. appears.
</td></tr>
<tr><td>U130</td><td>
Toner install mode
Description
Executes toner install operation.
Purpose
To operate when installing the machine.
Method
1. Press the start key. “on” appears.
2. Press the start key.
* Installation of toner starts and "9" is indicated in the copy quantity display. Each time one minute elapses, the indicated value decrements. When the installation is complete, "Gd" will be displayed if the installation is successful or "nG" will be displayed if it has failed.
3. To stop the installation in the middle, press the stop/clear key.
Completion
Press the stop/clear key. The indication for selecting a maintenance item No. appears.
</td></tr>
</table>

<table>
<tr><th>Maintenance item No.</th><th>Description</th></tr>
<tr><td>U144</td><td>
Setting toner loading operation
Description
Sets toner loading operation.
Purpose
To run when drum filming (background blur in paper edge section) occurs. Change the setting value to 3 when poor-quality paper is used and filming occurs frequently.
Method
Press the start key. The screen for selecting an item is displayed.
Setting
1. Change the setting using the zoom +/– keys.
<table>
<tr><th>Display</th><th>Description</th></tr>
<tr><td>0</td><td>Toner not loaded</td></tr>
<tr><td>1</td><td>Executes toner loading operation before starting driving based on the printing ratio.</td></tr>
<tr><td>2</td><td>Executes toner loading operation between sheets of paper based on the printing ratio.</td></tr>
<tr><td>3</td><td>Executes toner loading operation between sheets of paper every time.</td></tr>
</table>
Initial setting: 0
2. Press the start key. The value is set.
Completion
Press the stop/clear key. The indication for selecting a maintenance item No. appears.
</td></tr>
<tr><td>U158</td><td>
Checking/clearing the developing count
Description
Displays the developing count for checking, clearing or changing a figure.
Purpose
To check the developing count.
Method
1. Press the start key.
2. Select the item by lighting a copy exposure indicator using the copy exposure adjustment keys.
<table>
<tr><th>Copy exposure indicator</th><th>Description</th><th>Setting range</th><th>Initial setting</th></tr>
<tr><td>Exp. 1</td><td>First 3 digits</td><td>000 to 999</td><td>000</td></tr>
<tr><td>Exp. 2</td><td>Last 3 digits</td><td>000 to 999</td><td>000</td></tr>
<tr><td>Exp. 3</td><td>Clearing the count</td><td>———</td><td>———</td></tr>
</table>
Clearing
1. Light exp. 3.
2. Press the start key. The count is cleared, and the indication for selecting a maintenance item No. appears.
Setting
1. Change the count using the numeric or zoom +/– keys.
2. Press the start key. The count is set, and the indication for selecting a maintenance item No. appears.
Completion
To exit this maintenance item without changing the count, press the stop/clear key. The indication for selecting a maintenance item No. appears.
</td></tr>
</table>

<table>
<tr><th>Maintenance item No.</th><th>Description</th></tr>
<tr><td>U161</td><td>
Setting the fixing control temperature
Description
Changes the fixing control temperature.
Purpose
Normally no change is necessary. However, can be used to prevent curling or creasing of paper, or solve a fixing problem on thick paper.
Method
Press the start key. A selection item appears.
Setting
1. Select the item to be set by lighting a copy exposure indicator using the copy exposure adjustment keys.
2. Change the setting using the zoom +/– keys.
<table>
<tr><th>Copy exposure indicator</th><th>Description</th><th>Setting range</th><th>Initial setting</th></tr>
<tr><td>Exp. 1 (lit)</td><td>Primary stabilization fixing temperature</td><td>120 to 185 (°C)</td><td>140</td></tr>
<tr><td>Exp. 2 (lit)</td><td>Secondary stabilization fixing temperature</td><td>120 to 185 (°C)</td><td>160</td></tr>
<tr><td>Exp. 3 (lit)</td><td>Copying operation temperature 1</td><td>160 to 220 (°C)</td><td>170</td></tr>
<tr><td>Exp. 4 (lit)</td><td>Copying operation temperature 2</td><td>160 to 220 (°C)</td><td>180</td></tr>
<tr><td>Exp. 5 (lit)</td><td>Number of sheets for fixing control</td><td>1 to 99</td><td>5</td></tr>
<tr><td>Exp. 1 (flashing)</td><td>Number of sheets for fixing control (thick paper)</td><td>1 to 99</td><td>20</td></tr>
</table>
Copying operation temperature 1: Temperature in copying operation at the start of copying
Copying operation temperature 2: Temperature in copying operation after the specified number of sheets for fixing control have passed
Number of sheets for fixing control: The number of sheets to be counted for switching from copying operation temperature 1 to copying operation temperature 2
The temperatures are to be set such that Secondary stabilization ≥ Primary stabilization.
3. Press the start key. The value is set.
Completion
To exit this maintenance item without changing the current setting, press the stop/clear key. The indication for selecting a maintenance item No. appears.
</td></tr>
<tr><td>U162</td><td>
Stabilizing fixing forcibly
Description
Stops the stabilization fixing drive forcibly, regardless of fixing temperature.
Purpose
To forcibly stabilize the machine before the fixing section reaches stabilization temperature.
Method
1. Press the start key. “on” appears.
2. Press the start key. The forced stabilization mode is entered, and stabilization operation stops regardless of fixing temperature. The indication for selecting a maintenance item No. appears.
To exit the forced stabilization mode, turn the power off and on.
Completion
Press the stop/clear key. The indication for selecting a maintenance item No. appears.
</td></tr>
<tr><td>U163</td><td>
Resetting the fixing problem data
Description
Resets the detection of a service call code indicating a problem in the fixing section.
Purpose
To prevent accidents due to an abnormally high fixing temperature.
Method
1. Press the start key. “CLE” appears.
2. Press the start key. The fixing problem data is initialized.
Completion
Press the stop/clear key. The indication for selecting a maintenance item No. appears.
</td></tr>
</table>

<table>
<tr><th>Maintenance item No.</th><th>Description</th></tr>
<tr><td>U167</td><td>
Checking/clearing the fixing count
Description
Displays the fixing count for checking, clearing or changing a figure.
Purpose
To check the fixing count.
Method
1. Press the start key.
2. Select the item by lighting a copy exposure indicator using the copy exposure adjustment keys.
<table>
<tr><th>Copy exposure indicator</th><th>Description</th><th>Setting range</th><th>Initial setting</th></tr>
<tr><td>Exp. 1
Exp. 2
Exp. 3</td><td>First 3 digits
Last 3 digits
Clearing the count</td><td>000 to 999
000 to 999
———</td><td>000
000
———</td></tr>
</table>
Clearing
1. Light exp. 3.
2. Press the start key. The count is cleared, and the indication for selecting a maintenance item No. appears.
Setting
1. Change the count using the numeric or zoom +/– keys.
2. Press the start key. The count is set, and the indication for selecting a maintenance item No. appears.
Completion
To exit this maintenance item without changing the count, press the stop/clear key. The indication for selecting a maintenance item No. appears.
</td></tr>
<tr><td>U199</td><td>
Checking the fixing temperature
Description
Displays the fixing temperature and the ambient temperature.
Purpose
To check the fixing temperature and the ambient temperature.
Method
1. Press the start key.
2. Display each temperature by lighting the respective copy exposure indicator using the copy exposure adjustment keys.
<table>
<tr><th>Copy exposure indicator</th><th>Description</th></tr>
<tr><td>Exp. 1
Exp. 2</td><td>Fixing temperature (°C)
Ambient temperature (°C)</td></tr>
</table>
Completion
Press the stop/clear key. The indication for selecting a maintenance item No. appears.
</td></tr>
<tr><td>U200</td><td>
Turning all LEDs on
Description
Turns all the LEDs on the operation panel on.
Purpose
To check if all the LEDs on the operation panel light.
Method
Press the start key. All the LEDs on the operation panel light.
Press the stop/clear key or wait for 10 s. The LEDs turns off, and the indication for selecting a maintenance item No. appears.
</td></tr>
<tr><td>U202</td><td>
Setting the KMAS host monitoring system
Description
Initializes or operates the KMAS host monitoring system.
This is an optional device which is currently supported only by Japanese specification machines, so no setting is necessary.
</td></tr>
</table>

<table>
<tr><th>Maintenance item No.</th><th>Description</th></tr>
<tr><td>U203</td><td>
Operating DP separately
Description
Simulates the original conveying operation separately in the DP.
Purpose
To check the DP.
Method
1. Press the start key.
2. Place an original in the DP if running this simulation with paper.
3. Select the item to be operated using the copy exposure adjustment keys.
<table>
<tr><th>Display (copy exposure indicator)</th><th>Operation</th></tr>
<tr><td>d-P (exp. 1)
d-n (exp. 2)
dp2 (exp. 3)
dn2 (exp. 4)</td><td>With paper
Without paper (continuous operation)
With paper (duplex mode)
Without paper (duplex mode)</td></tr>
</table>
4. Press the start key. The operation starts.
5. To stop continuous operation, press the stop/clear key.
Completion
Press the stop/clear key when the operation stops. The indication for selecting a maintenance item No. appears.
</td></tr>
<tr><td>U204</td><td>
Setting the presence or absence of a key card or key counter
Description
Sets the presence or absence of the optional key card or key counter.
Purpose
To run this maintenance item if a key card or key counter is installed.
Method
Press the start key.
Setting
1. Select either “on” or “oFF” using the zoom +/– keys.
<table>
<tr><th>Display</th><th>Description</th></tr>
<tr><td>oFF
on</td><td>None
The key card or key counter is installed</td></tr>
</table>
Initial setting: oFF
2. Press the start key. The setting is set and the indication for selecting a maintenance item No. appears.
Completion
To exit this maintenance item without changing the current setting, press the stop/clear key. The indication for selecting a maintenance item No. appears.
</td></tr>
<tr><td>U207</td><td>
Checking the operation panel keys
Description
Checks operation of the operation panel keys.
Purpose
To check operation of all the keys and LEDs on the operation panel.
Method
1. Press the start key.
2. “1” appears on the copy quantity display and the leftmost LED on the operation panel lights.
3. As the keys on the operation panel are pressed in order from the left to right, the figure shown on the copy quantity display increases in increments of 1. If there is an LED corresponding to the key pressed, the LED will light.
4. When all the keys on the operation panel have been pressed, all the LEDs light for up to 10 seconds.
5. When the LEDs go off, press the start key. All the LEDs light for 10 seconds again.
Completion
Press the stop/clear key. The indication for selecting a maintenance item No. appears.
</td></tr>
</table>

<table>
<tr><th>Maintenance item No.</th><th>Description</th></tr>
<tr><td>U243</td><td>
Checking the operation of the DP motors and solenoids
Description
Turns the motors and solenoids in the optional DP on.
Purpose
To check the operation of the DP motors and solenoids.
Method
1. Press the start key.
2. Select the motor or solenoid to be operated using the copy exposure adjustment keys.
3. Press the start key. The operation starts.
<table>
<tr><th>Indication (copy exposure indicator)</th><th>Motor</th></tr>
<tr><td>F-0 (exp. 1)
C-0 (exp. 2)
b-S (exp. 3)
P-S (exp. 4)</td><td>Original feed motor (OFM)
Original conveying motor (OCM)
Switchback feedshift solenoid (SBFSSOL)
Switchback pressure solenoid (SBPSOL)</td></tr>
</table>
4. To turn each motor off, press the stop/clear key.
Completion
Press the stop/clear key when operation stops. The indication for selecting a maintenance item No. appears.
</td></tr>
<tr><td>U244</td><td>
Checking the DP switches
Description
Displays the status of the switches in the optional DP.
Purpose
To check if switches in the DP operate correctly.
Method
1. Press the start key.
2. Turn each switche on and off manually to check the status. When the on-status of a switch is detected, the LEDs on the operation panel corresponding to the operated switch lights.
<table>
<tr><th>LEDs</th><th>Switch</th></tr>
<tr><td>Auto Exp.
Text & Photo
Photo
Text
Program
Eco-copy</td><td>Original set switch (OSSW)
DP timing switch (DPTSW)
Original detection switch (ODSW)
DP original cover switch (DPOCSW)
Original size length switch (OSLSW)
Original switchback switch (OSBSW)</td></tr>
</table>
Completion
Press the stop/clear key. The indication for selecting a maintenance item No. appears.
</td></tr>
<tr><td>U250</td><td>
Setting the maintenance cycle
Description
Displays and changes the maintenance cycle.
Purpose
To check and change the maintenance cycle.
Method
1. Press the start key. The current setting is displayed.
2. Select the item by lighting a copy exposure indicator using the copy exposure adjustment keys.
<table>
<tr><th>Copy exposure indicator</th><th>Description</th><th>Setting range</th><th>Initial setting</th></tr>
<tr><td>Exp. 1
Exp. 2</td><td>First 3 digits
Last 3 digits</td><td>000 to 999
000 to 999</td><td>150
000</td></tr>
</table>
3. Change the setting using the numeric or zoom +/– keys.
4. Press the start key. The value is set, and the indication for selecting a maintenance item No. appears.
Completion
To exit this maintenance item without changing the current setting, press the stop/clear key. The indication for selecting a maintenance item No. appears.
</td></tr>
</table>

<table>
<tr><th>Maintenance item No.</th><th>Description</th></tr>
<tr><td>U251</td><td>
Checking/clearing the maintenance count
Description
Displays, clears and changes the maintenance count.
Purpose
To check the maintenance count. Also to clear the count during maintenance service.
Method
1. Press the start key.
2. Select the item by lighting a copy exposure indicator using the copy exposure adjustment keys.
<table>
<tr><th>Copy exposure indicator</th><th>Description</th><th>Setting range</th><th>Initial setting</th></tr>
<tr><td>Exp. 1
Exp. 2
Exp. 3</td><td>First 3 digits
Last 3 digits
Clearing the count</td><td>000 to 999
000 to 999
———</td><td>000
000
———</td></tr>
</table>
Clearing
1. Light exp. 3.
2. Press the start key. The count is cleared, and the indication for selecting a maintenance item No. appears.
Setting
1. Change the count using the numeric or zoom +/– keys.
2. Press the start key. The count is set, and the indication for selecting a maintenance item No. appears.
Completion
To exit this maintenance item without changing the count, press the stop/clear key. The indication for selecting a maintenance item No. appears.
</td></tr>
<tr><td>U252</td><td>
Setting the destination
Description
Switches the operations and screens of the machine according to the destination.
Purpose
To return the destination setting to its default setting after initializing the backup RAM by running maintenance item U020.
Method
Press the start key.
Setting
1. Select the destination using the zoom +/– keys.
<table>
<tr><th>Display</th><th>Description</th></tr>
<tr><td>Jpn
Inc
EUP
ASA</td><td>Metric (Japan) specifications
Inch (North America) specifications
Metric (Europe) specifications
Metric (Asia Pacific) specifications</td></tr>
</table>
2. Press the start key. The setting is set, and the machine automatically returns to the same status as when the power is turned on.
Completion
To exit this maintenance item without changing the current count, press the stop/clear key. The indication for selecting a maintenance item No. appears.
Supplement
The specified initial settings are provided according to the destinations in the maintenance items below. To change the initial settings in those items, be sure to run maintenance item U021 after changing the destination.
• Initial setting according to the destinations
<table>
<tr><th>Maintenance item No.</th><th>Title</th><th>Japan</th><th>Inch</th><th>Europe Metric, Asia Pacific</th></tr>
<tr><td>253

255</td><td>Switching between double and single counts
Setting auto clear time</td><td>Single

120 s</td><td>Double

90 s</td><td>Double

90 s</td></tr>
</table>
</td></tr>
</table>

<table>
<tr><th>Maintenance item No.</th><th>Description</th></tr>
<tr><td>U253</td><td>
Switching between double and single counts
Description
Switches the count system for the total counter and other counters.
Purpose
According to user (copy service provider) request, select if A3/11" × 17" paper is to be counted as one sheet (single count) or two sheets (double count).
Method
Press the start key.
Setting
1. Select the item using the zoom +/– keys.
<table>
<tr><th>Display</th><th>Description</th></tr>
<tr><td>-A3
Sin
-b4</td><td>Double count for A3/11" × 17" paper only
Single count for all size paper
Double count for B4 size or larger</td></tr>
</table>
Initial setting: -A3
2. Press the start key. The setting is set, and the indication for selecting a maintenance item No. appears.
Completion
To exit this maintenance item without changing the current setting, press the stop/clear key. The indication for selecting a maintenance item No. appears.
</td></tr>
<tr><td>U254</td><td>
Turning auto start function on/off
Description
Selects if the auto start function is turned on.
Purpose
Normally no change is necessary. If incorrect operation occurs, turn the function off: this may solve the problem.
Method
Press the start key.
Setting
1. Select either “on” or “oFF” using the zoom +/– keys.
<table>
<tr><th>Display</th><th>Description</th></tr>
<tr><td>on
oFF</td><td>Auto start function on
Auto start function off</td></tr>
</table>
Initial setting: on
2. Press the start key. The setting is set, and the indication for selecting a maintenance item No. appears.
Completion
To exit this maintenance item without changing the current setting, press the stop/clear key. The indication for selecting a maintenance item No. appears.
</td></tr>
</table>

<table>
<tr><th>Maintenance item No.</th><th>Description</th></tr>
<tr><td>U255</td><td>
Setting auto clear time
Description
Sets the time to return to initial settings after copying is complete.
Purpose
To be set according to frequency of use. Set to a comparatively long time for continuous copying at the same settings, and a comparatively short time for frequent copying at various settings.
Method
Press the start key. The current setting is displayed.
Setting
1. Change the setting using the zoom +/– keys.
<table>
<tr><th>Description</th><th>Setting range</th><th>Initial setting</th></tr>
<tr><td>Auto clear time</td><td>0 to 270 (s)</td><td>90</td></tr>
</table>
The setting can be changed by 10 s per step.
When set to 0, the auto clear function is cancelled.
2. Press the start key. The value is set, and the indication for selecting a maintenance item No. appears.
Completion
To exit this maintenance item without changing the current setting, press the stop/clear key. The indication for selecting a maintenance item No. appears.
</td></tr>
<tr><td>U258</td><td>
Switching copy operation at toner empty detection
Description
Selects if continuous copying is enabled after toner empty is detected.
Method
Press the start key. The current setting is displayed.
Setting
1. Select single or continuous copying using the zoom +/– keys.
<table>
<tr><th>Display</th><th>Description</th></tr>
<tr><td>Sin
Con</td><td>Enables only single copying.
Enables single and continuous copying.</td></tr>
</table>
Initial setting: Sin
2. Press the start key. The setting is set, and the indication for selecting a maintenance item No. appears.
Completion
To exit this maintenance item without changing the current setting, press the stop/clear key. The indication for selecting a maintenance item No. appears.
</td></tr>
</table>

<table>
<tr><th>Maintenance item No.</th><th>Description</th></tr>
<tr><td>U260</td><td>
Changing the copy count timing
Description
Changes the copy count timing for the total counter and other counters.
Purpose
To be set according to user (copy service provider) request.
If a paper jam occurs frequently in the eject section when the number of copies is counted at the time of paper ejection, copies are provided without copy counts. The copy service provider cannot charge for such copying. To prevent this, the copy timing should be made earlier.
If a paper jam occurs frequently in the paper conveying or fixing sections when the number of copies is counted before the paper reaches those sections, copying is charged without a copy being made. To prevent this, the copy timing should be made later.
Method
Press the start key.
Setting
1. Select the copy count timing using the zoom +/– keys.
<table>
<tr><th>Display</th><th>Description</th></tr>
<tr><td>FEd
EJE</td><td>When secondary paper feed starts
When the paper is ejected</td></tr>
</table>
Initial setting: EJE
2. Press the start key. The setting is set, and the indication for selecting a maintenance item No. appears.
Completion
To exit this maintenance item without changing the current setting, press the stop/clear key. The indication for selecting a maintenance item No. appears.
</td></tr>
<tr><td>U265</td><td>
Setting the destination specifications
Description
Sets whether or not to print the product name on the reports that users print.
Purpose
To be set according to user request.
Method
Press the start key. The current setting appears.
Setting
1. Enter “0” or “2” using the zoom +/– keys.
<table>
<tr><th>Setting</th><th>Description</th></tr>
<tr><td>0
2</td><td>Product name printed
Product name not printed</td></tr>
</table>
Initial setting: 0
2. Press the start key. The setting is set.
Completion
Press the stop/clear key. The indication for selecting a maintenance item No. appears.
</td></tr>
</table>

<table>
<tr><th>Maintenance item No.</th><th>Description</th></tr>
<tr><td>U332</td><td>
Setting the size conversion factor
Description
Sets the coefficient of nonstandard sizes in relation to the A4/11" × 8 1/2" size. The coefficient set here is used to convert the black ratio in relation to the A4/11" × 8 1/2" size and to display the result in user simulation.
Purpose
To set the coefficient for converting the black ratio for nonstandard sizes in relation to the A4/11" × 8 1/2" size for copying and printing respectively.
Method
Press the start key. The current setting is displayed.
Setting
1. Change the setting using the zoom +/– keys.
<table>
<tr><th>Description</th><th>Setting range</th><th>Initial setting</th></tr>
<tr><td>Size conversion factor</td><td>0.0 to 3.0</td><td>1.0</td></tr>
</table>
2. Press the start key. The value is set, and the indication for selecting a maintenance item No. appears.
Completion
To exit this maintenance item without changing the current setting, press the stop/clear key. The indication for selecting a maintenance item No. appears.
</td></tr>
<tr><td>U342</td><td>
Setting the ejection restriction
Description
Sets or cancels the restriction on the number of sheets to be ejected continuously.
When the restriction is set, the number of sheets that can be ejected continuously to the internal eject tray will be limited to 250.
Purpose
According to user request, sets or cancels restriction on the number of sheets.
Method
Press the start key.
Setting
1. Select “on” or “oFF” using the zoom +/– keys.
<table>
<tr><th>Display</th><th>Description</th></tr>
<tr><td>on
oFF</td><td>The number of sheets restricted.
The number of sheets not restricted.</td></tr>
</table>
Initial setting: on
2. Press the start key. The setting is set. The indication for selecting a maintenance item No. appears.
Completion
To exit this maintenance item without changing the current setting, press the stop/clear key. The indication for selecting a maintenance item No. appears.
</td></tr>
<tr><td>U345</td><td>
Setting the value for maintenance due indication
Description
Sets when to display a message notifying that the time for maintenance is about to be reached, by setting the number of copies that can be made before the current maintenance cycle ends.
When the difference between the number of copies of the maintenance cycle and that of the maintenance count reaches the set value, the message is displayed.
This maintenance mode is effective for only Japanese specification.
</td></tr>
</table>

<table>
<tr><th>Maintenance item No.</th><th>Description</th></tr>
<tr><td>U402</td><td>Adjusting margins of image printing
Adjustment
See page 1-6-15.</td></tr>
<tr><td>U403</td><td>Adjusting margins for scanning an original on the contact glass
Adjustment
See page 1-6-32.</td></tr>
<tr><td>U404</td><td>Adjusting margins for scanning an original from the DP
Description
Adjusts margins for scanning the original from the DP.
Purpose
Used if margins are not correct when the optional DP is used.
Caution
Before making this adjustment, ensure that the following adjustments have been made in maintenance mode.
U402 → U403 → U404
Method
Press the start key.
Setting
1. Select the item by lighting a copy exposure indicator using the copy exposure adjustment keys.
2. Change the setting using the zoom +/– keys.
<table>
<tr><th>Copy exposure indicator</th><th>Description</th><th>Setting range</th><th>Initial setting</th><th>Change in value per step</th></tr>
<tr><td>Exp. 1</td><td>Left margin</td><td>0.0 to 10.0</td><td>2.0</td><td>0.5 mm</td></tr>
<tr><td>Exp. 2</td><td>Leading edge margin</td><td>0.0 to 10.0</td><td>3.0</td><td>0.5 mm</td></tr>
<tr><td>Exp. 3</td><td>Right margin</td><td>0.0 to 10.0</td><td>2.0</td><td>0.5 mm</td></tr>
<tr><td>Exp. 4</td><td>Trailing edge margin</td><td>0.0 to 10.0</td><td>2.0</td><td>0.5 mm</td></tr>
</table>
Increasing the setting makes the margin wider, and decreasing it makes the margin narrower.
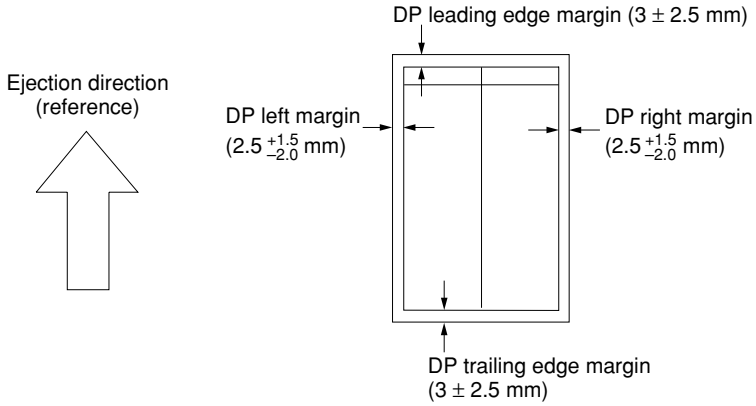

Figure 1-4-7 Correct margin amount
3. Press the start key. The value is set.
Interrupt copy mode
While this maintenance item is being performed, copying from an original can be made in interrupt copy mode. A test copy is output at the reduction ratio of 95%.
Completion
Press the stop/clear key while a selection item is displayed. The indication for selecting a maintenance item No. appears.</td></tr>
<tr><td>U407</td><td>Adjusting the leading edge registration for memory image printing
Adjustment
See page 1-6-13.</td></tr>
</table>

Maintenance item No.	Description
U901	**Checking/clearing copy counts by paper feed locations**

Description

Displays or clears copy counts by paper feed locations.

Purpose

To check the time to replace consumable parts. Also to clear the counts after replacing the consumable parts.

Method

1. Press the start key.
2. Select the paper feed location (group No.) for which the count is to be checked or cleared by lighting image mode LEDs using the image mode selection key.
3. Select the item by lighting a copy exposure indicator using the copy exposure adjustment keys.

Image mode LED (group No.)		Copy exposure indicator	Copy quantity display (count value)
1	○ Text & Photo ○ Photo ● Text	Exp. 1 Exp. 2 Exp. 3	First 3 digits of bypass copy count Last 3 digits of bypass copy count Clearing the count (CLE)
2	○ Text & Photo ● Photo ● Text	Exp. 1 Exp. 2 Exp. 3	First 3 digits of the drawer copy count Last 3 digits of the drawer copy count Clearing the count (CLE)
3	● Text & Photo ● Photo ● Text	Exp. 1 Exp. 2 Exp. 3	First 3 digits of the first paper feeder copy count Last 3 digits of the first paper feeder copy count Clearing the count (CLE)
4	● Text & Photo ● Photo ☼ Text	Exp. 1 Exp. 2 Exp. 3	First 3 digits of the second paper feeder copy count Last 3 digits of the second paper feeder copy count Clearing the count (CLE)
5	● Text & Photo ☼ Photo ☼ Text	Exp. 1 Exp. 2 Exp. 3	First 3 digits of the third paper feeder copy count Last 3 digits of the third paper feeder copy count Clearing the count (CLE)
6	☼ Text & Photo ☼ Photo ☼ Text	Exp. 1 Exp. 2 Exp. 3	First 3 digits of the duplex unit copy count Last 3 digits of the duplex unit copy count Clearing the count (CLE)
7	● Text & Photo ● Photo ☼ Text	Exp. 1	Clearing all counts (CLE)

○ : Off, ● : On, ☼: Flashing

Note: When no optional paper feed device is installed, the counts corresponding to optional paper feed devices will not appear.

Clearing copy counts by paper feed locations

1. Select the paper feed location to clear the count.
2. Light exp. 3 using the copy exposure adjustment key.
3. Press the start key. The count is cleared.

Clearing copy counts for all paper feed locations

1. Select group 7.
2. Press the start key. The counts are cleared.

Completion

Press the stop/clear key. The indication for selecting a maintenance item No. appears.

Maintenance item No.	Description
U903	**Checking/clearing the paper jam counts** **Description** Displays or clears the jam counts by jam locations. **Purpose** To check the paper jam status. Also to clear the jam counts after replacing consumable parts. **Method** 1. Press the start key. 2. Display the jam code to check the count using the copy exposure adjustment keys. 3. Press the start key. The jam count appears. If the jam count is a 4-digit value, the first digit and the last 3 digits are displayed alternately. 4. Press the stop/clear key. The jam code appears again. 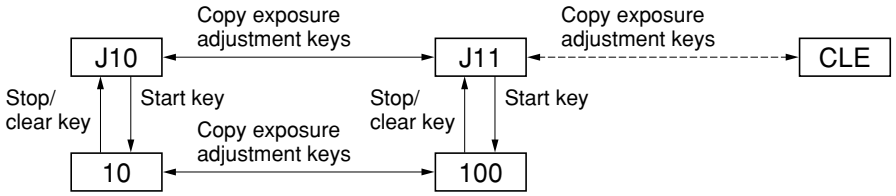 **Figure 1-4-8** **Clearing all jam counts** 1. Display “CLE” using the copy exposure adjustment keys. Jam counts cannot be cleared individually. 2. Press the start key. The counts are cleared. **Completion** Press the stop/clear key. The indication for selecting a maintenance item No. appears.
U904	**Checking/clearing the service call counts** **Description** Displays or clears the service call code counts by types. **Purpose** To check the service call code status by types. Also to clear the service call code counts after replacing consumable parts. **Method** 1. Press the start key. 2. Display the service call code to check the count using the copy exposure adjustment keys. 3. Press the start key. The service call count appears. If the service call count is a 4-digit value, the first digit and the last 3 digits are displayed alternately. 4. Press the stop/clear key. The service call code appears again. 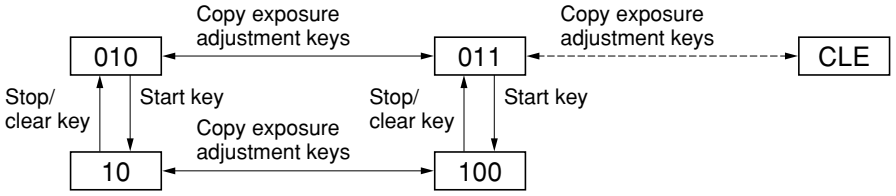 **Figure 1-4-9** **Clearing counts by service call codes** 1. Display the service call code to clear the count. 2. Press the reset key. The count is cleared. **Clearing all service call counts** 1. Display “CLE” using the copy exposure adjustment keys. 2. Press the start key. The counts are cleared. **Completion** Press the stop/clear key. The indication for selecting a maintenance item No. appears.

Maintenance item No.	Description
U905	**Checking/clearing counts by the DP** **Description** Displays or clears the counts of the DP. **Purpose** To check the use of the DP. Also to clear the counts after replacing consumable parts. **Method** 1. Press the start key. 2. Select the count (group No.) to be checked or cleared by lighting image mode LEDs using the image mode selection key. 3. Select the item by lighting a copy exposure indicator using the copy exposure adjustment keys.

Image mode LED (group No.)		Copy exposure indicator	Copy quantity display (count value)
1	○ Text & Photo ○ Photo ● Text	Exp. 1 Exp. 2 Exp. 3	First 3 digits of the number of original replacement Last 3 digits of the number of original replacement Clearing the count (CLE)
2	○ Text & Photo ● Photo ● Text	Exp. 1 Exp. 2 Exp. 3	First 3 digits of the double-sided original feed count Last 3 digits of the double-sided original feed count Clearing the count (CLE)

○ : Off, ● : On

Clearing
1. Select the count to be cleared.
2. Light exp. 3 using the copy exposure adjustment keys.
3. Press the start key. The count is cleared.

Completion
Press the stop/clear key. The indication for selecting a maintenance item No. appears.

<table>
<tr><th>Maintenance item No.</th><th>Description</th></tr>
<tr><td>U908</td><td>
Checking the total count
Description
Display the total count value.
Purpose
To check the total count value.
Method
1. Press the start key.
2. Select the item by lighting a copy exposure indicator using the copy exposure adjustment keys.
<table>
<tr><th>Copy exposure indicator</th><th>Copy quantity display (count value)</th></tr>
<tr><td>Exp. 1
Exp. 2</td><td>First 3 digits of the total count
Last 3 digits of the total count</td></tr>
</table>
Completion
Press the stop/clear key. The indication for selecting a maintenance item No. appears.
</td></tr>
<tr><td>U910</td><td>
Clearing the black ratio data
Description
Clears the accumulated black ratio data for A4/11" × 8 1/2" sheets.
Purpose
To clear data as required at times such as during maintenance service.
Method
1. Press the start key.
2. Select “on” using the zoom +/– keys.
<table>
<tr><th>Display</th><th>Operation</th></tr>
<tr><td>– – –
on</td><td>Canceling the clearing
Executing the clearing</td></tr>
</table>
3. Press the start key. The accumulated black ratio data is cleared.
Completion
To exit this maintenance item without clearing the data, press the stop/clear key. The indication for selecting a maintenance item No. appears.
</td></tr>
</table>

Maintenance item No.	Description
U911	**Checking/clearing copy counts by paper size** **Description** Displays or clears the paper feed count value by paper size. **Purpose** To check the time to replace consumable parts. Also to clear the counts after replacing the consumable parts. **Method** 1. Press the start key. 2. Select the paper size (group No.) for which the count is to be checked or cleared by lighting image mode LEDs using the image mode selection key. 3. Select the item by lighting a copy exposure indicator using the copy exposure adjustment keys.

Image mode LED (group No.)		Copy exposure indicator	Copy quantity display (count value)
1	○ Text & Photo ○ Photo ● Text	Exp. 1 (lit) Exp. 2 (lit) Exp. 3 (lit) Exp. 4 (lit)	"-A3" display the A3 size First 3 digits of A3 size copy count Last 3 digits of A3 size copy count Clearing the count (CLE)
2	○ Text & Photo ● Photo ● Text	Exp. 1 (lit) Exp. 2 (lit) Exp. 3 (lit) Exp. 4 (lit)	"-b4" display the B4 size First 3 digits of B4 size copy count Last 3 digits of B4 size copy count Clearing the count (CLE)
3	● Text & Photo ● Photo ● Text	Exp. 1 (lit) Exp. 2 (lit) Exp. 3 (lit) Exp. 4 (lit)	"-A4" display the A4 size First 3 digits of A4 size copy count Last 3 digits of A4 size copy count Clearing the count (CLE)
4	● Text & Photo ● Photo ☼ Text	Exp. 1 (lit) Exp. 2 (lit) Exp. 3 (lit) Exp. 4 (lit)	"-b5" display the B5 size First 3 digits of FOLIO size copy count Last 3 digits of FOLIO size copy count Clearing the count (CLE)
5	● Text & Photo ☼ Photo ☼ Text	Exp. 1 (lit) Exp. 2 (lit) Exp. 3 (lit) Exp. 4 (lit)	"-A5" display the A5 size First 3 digits of Legal size copy count Last 3 digits of Legal size copy count Clearing the count (CLE)
6	☼ Text & Photo ☼ Photo ☼ Text	Exp. 1 (lit) Exp. 2 (lit) Exp. 3 (lit) Exp. 4 (lit)	"-A6" display the A6 size First 3 digits of Letter size copy count Last 3 digits of Letter size copy count Clearing the count (CLE)
7	● Text & Photo ● Photo ☼ Text	Exp. 1 (lit) Exp. 2 (lit) Exp. 3 (lit) Exp. 4 (lit)	"-Fo" display the FOLIO size First 3 digits of FOLIO size copy count Last 3 digits of FOLIO size copy count Clearing the count (CLE)
8	● Text & Photo ☼ Photo ☼ Text	Exp. 1 (lit) Exp. 2 (lit) Exp. 3 (lit) Exp. 4 (lit)	"-Ld" display the Ledger size First 3 digits of Ledger size copy count Last 3 digits of Ledger size copy count Clearing the count (CLE)

○ : Off ● : On ☼ : Flashing

<table>
<tr><th>Maintenance item No.</th><th>Description</th></tr>
<tr><td>U911</td><td>
<table>
<tr><th colspan="2">Image mode LED (group No.)</th><th>Copy exposure indicator</th><th>Copy quantity display (count value)</th></tr>
<tr><td>9</td><td>☼ Text & Photo
☼ Photo
☼ Text</td><td>Exp. 1 (lit)
Exp. 2 (lit)
Exp. 3 (lit)
Exp. 4 (lit)</td><td>“-Lg” display the Legal size
First 3 digits of Legal size copy count
Last 3 digits of Legal size copy count
Clearing the count (CLE)</td></tr>
<tr><td>10</td><td>● Text & Photo
● Photo
☼ Text</td><td>Exp. 1 (lit)
Exp. 2 (lit)
Exp. 3 (lit)
Exp. 4 (lit)</td><td>“-Lt” display the Letter size
First 3 digits of Letter size copy count
Last 3 digits of Letter size copy count
Clearing the count (CLE)</td></tr>
<tr><td>11</td><td>● Text & Photo
☼ Photo
☼ Text</td><td>Exp. 1 (lit)
Exp. 2 (lit)
Exp. 3 (lit)
Exp. 4 (lit)</td><td>“-St” display the Statement size
First 3 digits of Statement size copy count
Last 3 digits of Statement size copy count
Clearing the count (CLE)</td></tr>
<tr><td>12</td><td>☼ Text & Photo
☼ Photo
☼ Text</td><td>Exp. 1 (lit)
Exp. 2 (lit)
Exp. 3 (lit)
Exp. 4 (lit)</td><td>“-ot” display the other size
First 3 digits of other size copy count
Last 3 digits of other size copy count
Clearing the count (CLE)</td></tr>
<tr><td>13</td><td>● Text & Photo
● Photo
☼ Text</td><td>Exp. 1 (lit)</td><td>Clearing all counts (CLE)</td></tr>
</table>
○ : Off ● : On ☼ : Flashing

Clearing copy counts by paper size
1. Select the paper size to clear the count.
2. Display “CLE” using the copy exposure adjustment keys.
3. Press the start key. The count is cleared.

Clearing copy counts for all paper size
1. Select group 13.
2. Press the start key. The counts are cleared.

Completion
Press the stop/clear key. The indication for selecting a maintenance item No. appears.
</td></tr>
<tr><td>U927</td><td>
Clearing accounting counter

Description
Clears the total count and the scanner count. The counts, however, can be cleared only one time. If either of the total count or the scanner count exceeds 1,000, this mode cannot be run.

Purpose
To start the counters with value 0 when installing the machine.

Method
1. Press the start key. If the counters have been already cleared or either of the total counter or the scanner counter exceeds 1,000, this mode cannot be run and “nG” is displayed.
2. Select “on” using the zoom +/– keys.
<table>
<tr><th>Display</th><th>Operation</th></tr>
<tr><td>– – –
on</td><td>Canceling the clearing
Executing the clearing</td></tr>
</table>
3. Press the start key. The accounting counter is cleared.

Completion
To exit this maintenance item without clearing the data, press the stop/clear key. The indication for selecting a maintenance item No. appears.
</td></tr>
</table>

<table>
<tr><th>Maintenance item No.</th><th>Description</th></tr>
<tr><td>U928</td><td>
Checking/clearing the machine life count
Description
Displays the machine life counts for checking a figure.
Purpose
To check machine status. Do not clear or change the preset value.
Method
1. Press the start key.
2. Select the item by lighting a copy exposure indicator using the copy exposure adjustment keys.
<table>
<tr><th>Copy exposure indicator</th><th>Description</th><th>Setting range</th><th>Initial setting</th></tr>
<tr><td>Exp. 1
Exp. 2
Exp. 3</td><td>First 3 digits
Last 3 digits
Clearing the count</td><td>000 to 999
000 to 999
———</td><td>000
000
———</td></tr>
</table>
Clearing
1. Light exp. 3.
2. Press the start key. The count is cleared, and the indication for selecting a maintenance item No. appears.
Setting
1. Change the count using the numeric or zoom +/– keys.
2. Press the start key. The count is set, and the indication for selecting a maintenance item No. appears.
Completion
Press the stop/clear key. The indication for selecting a maintenance item No. appears.
</td></tr>
<tr><td>U990</td><td>
Checking/clearing the time for the exposure lamp to light
Description
Displays or clears the accumulated time for the exposure lamp to light.
Purpose
To check duration of use of the exposure lamp. Also to clear the accumulated time for the lamp after replacement.
Method
1. Press the start key.
2. Select the item by lighting a copy exposure indicator using the copy exposure adjustment keys.
<table>
<tr><th>Copy exposure indicator</th><th>Copy quantity display</th></tr>
<tr><td>Exp. 1
Exp. 2
Exp. 3</td><td>First 3 digits of the lamp-on time (minutes)
Last 3 digits of the lamp-on time (minutes)
Clearing the lamp-on time (CLE)</td></tr>
</table>
Clearing
1. Light exp. 3.
2. Press the start key. The accumulated time is cleared, and the indication for selecting a maintenance item No. appears.
Completion
To exit this maintenance item without changing the accumulated time, press the stop/clear key. The indication for selecting a maintenance item No. appears.
</td></tr>
</table>

<table>
<tr><th>Maintenance item No.</th><th>Description</th></tr>
<tr><td>U991</td><td>
Checking the scanner count
Description
Display the scanner count value.
Purpose
To check the scanner count value.
Method
1. Press the start key.
2. Change the indication of the copy quantity display by lighting a copy exposure indicator using the copy exposure adjustment keys.
<table>
<tr><th>Copy exposure indicator</th><th>Copy quantity display (count value)</th></tr>
<tr><td>Exp. 1
Exp. 2</td><td>First 3 digits of the scanner count
Last 3 digits of the scanner count</td></tr>
</table>
Completion
Press the stop/clear key. The indication for selecting a maintenance item No. appears.
</td></tr>
<tr><td>U993</td><td>
Outputting a VTC-PG pattern
Description
Selects and outputs a VTC-PG pattern created in the copier.
Purpose
When performing respective image printing adjustments, used to check the machine status apart from that of the scanner with a non-scanned output VTC-PG pattern.
Method
1. Press the start key.
2. Select the VTC-PG pattern to be output using the copy exposure adjustment keys.
<table>
<tr><th>Display</th><th>PG pattern to be output</th><th>Purpose</th></tr>
<tr><td>0</td><td>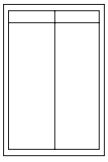</td><td>• Center line adjustment</td></tr>
<tr><td>1</td><td>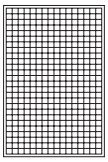</td><td>• Lateral squareness adjustment
• Magnification adjustment</td></tr>
<tr><td>2</td><td>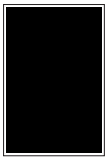</td><td>• Checking the fixing performance (fixing pressure)</td></tr>
</table>
3. Press the interrupt key. The machine enters the PG pattern output mode.
4. Press the start key. A VTC-PG pattern is output.
Completion
Press the stop/clear key. The indication for selecting a maintenance item No. appears.
</td></tr>
</table>

1-4-2 Copier management

In addition to a maintenance function for service, the copier is equipped with a management function which can be operated by users (mainly by the copier administrator). In this copier management mode, settings such as default settings can be changed.

(1) Using the copier management mode

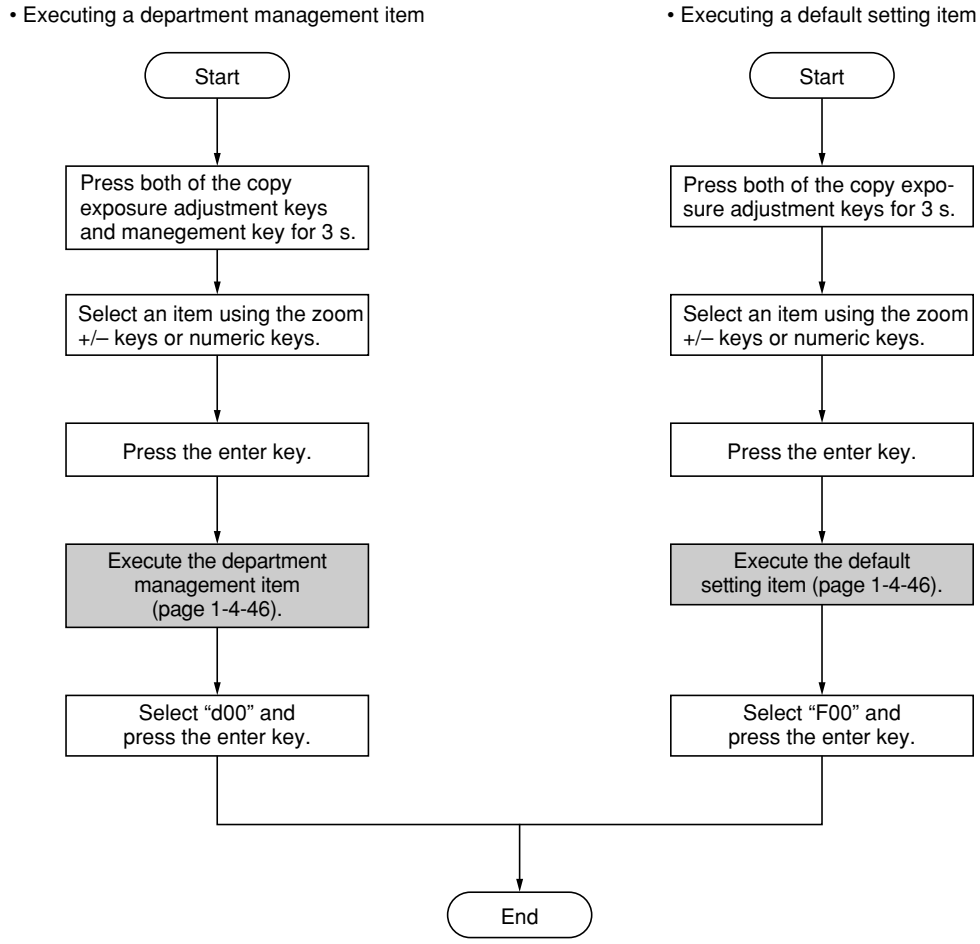

(2) Setting department management items

Management on/off setting

1. Select “d01” and press the enter key.
2. Select “ON” or “OFF” and press the enter key.
   Setting range: ON (set)/OFF (no setting)

Management code registration

1. Select “d02” and press the enter key.
2. Enter a department code using the numeric keys and press the enter key.
   Setting range: 0 to 99999999

Management code deletion

1. Select “d03” and press the enter key.
2. Enter the department code to be deleted using the numeric keys
3. Select “YES” or “NO” and press the enter key.
   Setting range: YES (delete)/NO (no deletion)

Clearing management count

1. Select “d04” and press the enter key.
2. Select “YES” or “NO” and press the enter key.
   Setting range: YES (clear)/NO (do not clear)

Outputing the management list

1. Select “d05” and press the enter key.
   If A4/11" × 8 1/2" paper is present, the list is automatically printed out. Otherwise, select the paper source and press the start key.

(3) Copy default

User status report

Prints the details of the default settings.

1. Select “F01” and press the enter key.
   If A4/11" × 8 1/2" paper is present, the list is automatically printed out. Otherwise, select the paper source and press the start key.

Original image quality

Selects the image quality at power-on.

1. Select “F02” and press the enter key.
2. Select the image mode and press the enter key.
   Setting range: 1 (text & photo)/2 (photo)/
   3 (text)

Exposure mode

Selects the exposure mode at power-on.

1. Select “F03” and press the enter key.
2. Select the exposure mode and press the enter key.
   Setting range: 1 (manual)/2 (auto)

Eco-copy

Selects the eco-copy mode at power-on.

1. Select “F04” and press the enter key.
2. Select “ON” or “OFF” and press the enter key.
   Setting range: ON (enabled)/OFF (disabled)

Exposure steps

Sets the number of exposure steps for the manual exposure mode.

1. Select “F05” and press the enter key.
2. Select “1 step” or “0.5 step” and press the enter key.
   Setting range: 1 (1 step)/2 (0.5 step)

Auto exposure adjustment

Adjusts the exposure for the auto exposure mode.

1. Select “F06” and press the enter key.
2. Select the setting and press the enter key.
   Setting range: 1 (lightest) to 7 (darkest)

Text and photo mode exposure adjustment

Adjusts the exposure to be used when text and photo original is selected for the image mode.

1. Select “F07” and press the enter key.
2. Select the setting and press the enter key.
   Setting range: 1 (lightest) to 7 (darkest)

Photo exposure adjustment

Adjusts the exposure to be used when photo original is selected for the image mode.

1. Select “F08” and press the enter key.
2. Select the setting and press the enter key.
   Setting range: 1 (lightest) to 7 (darkest)

Text exposure adjustment

Adjusts the exposure to be used when text original is selected for the image mode.

1. Select “F09” and press the enter key.
2. Select the setting and press the enter key.
   Setting range: 1 (lightest) to 7 (darkest)

Black-line correction

Reduces black lines that may be caused when the DP is used.

1. Select “F10” and press the enter key.
2. Select the setting and press the enter key.
   Setting range: 1 (off)/2 (weak)/3 (strong)

Photo processing

Select the image processing method for photo originals.

1. Select “F11” and press the enter key.
2. Select the setting and press the enter key.
   Setting range: 1 (error diffusion)/2 (dithering)
   Setting this to error diffusion when copying originals with text and photo and dithering when copying originals with mainly photos.

Ground color adjustment

The ground color adjusting after copying.

1. Select “F12” and press the enter key.
2. Select the setting and press the enter key.
   Setting range: 1 (lightest) to 5 (darkest)

Paper selection

Select the auto paper select function based on the original size or priority cassette selection.

1. Select “F13” and press the enter key.
2. Select the setting and press the enter key.
   Setting range: 1 (auto paper selection)/
   2 (selected drawer)

Selected drawer

Selects the drawer that is to be automatically be given priority for use.

1. Select “F14” and press the enter key.
2. Select the default drawer and press the enter key.
   Setting range: 1 (drawer)/2 (first paper feeder)/
   3 (second paper feeder)/4 (third paper feeder)
   Note: This setting item will not be displayed if no optional paper feeder is installed.

Auto drawer switching

Sets whether the auto drawer switching function is available.

1. Select “F15” and press the enter key.
2. Select “ON” or “OFF” and press the enter key.
   Setting range: ON (enabled)/OFF (disabled)
   Note: This setting item will not be displayed if no optional paper feeder is installed.

AMS mode

Selects whether auto magnification selection or 100% magnification is to be given priority when the sizes of the original and copy paper are different.

1. Select “F16” and press the enter key.
2. Select “ON” or “OFF” and press the enter key.
   Setting range: ON (enabled)/OFF (disabled)

Drawer paper size (drawer 1)

Sets the paper size for the drawer so that it will be automatically selected.

1. Select “F17” and press the enter key.
2. Select the paper size and press the enter key.
   Setting range: AtC (auto detection metric)/
   AtI (auto detection inch)/o2r (oficio2)

Drawer paper size (drawer 2)

Sets the paper size for the first paper feeder so that it will be automatically selected.

1. Select “F18” and press the enter key.
2. Select the paper size and press the enter key.
   Setting range: AtC (auto detection metric)/
   AtI (auto detection inch)/o2r (oficio2)
   Note: This setting item will not be displayed if no optional paper feeder is installed.

Drawer paper size (drawer 3)

Sets the paper size for the second paper feeder so that it will be automatically selected.

1. Select “F19” and press the enter key.
2. Select the paper size and press the enter key.
   Setting range: AtC (auto detection metric)/
   AtI (auto detection inch)/o2r (oficio2)
   Note: This setting item will not be displayed if no optional paper feeder is installed.

Drawer paper size (drawer 4)

Sets the paper size for the third paper feeder so that it will be automatically selected.

1. Select “F20” and press the enter key.
2. Select the paper size and press the enter key.
   Setting range: AtC (auto detection metric)/
   AtI (auto detection inch)/o2r (oficio2)
   Note: This setting item will not be displayed if no optional paper feeder is installed.

Bypass tray paper size

Sets the paper size for the bypass tray so that it will be automatically selected.

1. Select “F21” and press the enter key.
2. Select the paper size and press the enter key.
   Setting range: Uni (universal size)/A3r (A3/ 11" × 17")/A4r (A4/8 1/2" × 11")/A4E (A4 vertical/11" × 8 1/2")/A5r (A5/5 1/2" × 8 1/2")/ b4r (B4/8 1/2" × 14")/b5r (B5)/Cu1 (custom 1)/ Cu2 (custom 2)

Custom 1 size

Sets the size of the paper to be set to the custom 1 size.

1. Select “F22” and press the enter key.
2. Select the paper size and press the enter key.
   Setting range: b6r (B6)/A6r (A6)/Pos (postcard)/Ldr (ledger/11" × 17")/Lgr (legal/ 8 1/2" × 14")/Ltr (letter/8 1/2" × 11")/LtE (letter vertical/11" × 8 1/2")/Str (statement)/o2r (oficio2)/CPF (11" × 15")/InP (irregular size)

Custom 2 size

Sets the size of the paper to be set to the custom 2 size.

1. Select “F23” and press the enter key.
2. Select the paper size and press the enter key.
   Setting range: b6r (B6)/A6r (A6)/Pos (postcard)/Ldr (ledger/11" × 17")/Lgr (legal/ 8 1/2" × 14")/Ltr (letter/8 1/2" × 11")/LtE (letter vertical/11" × 8 1/2")/Str (statement)/o2r (oficio2)/CPF (11" × 15")/InP (irregular size)

Copy limit

Sets the number of copies limit for multiple copying.

1. Select “F24” and press the enter key.
2. Enter the setting and press the enter key.
   Setting range: 1 to 250 copies

Duplex copy reverse-side rotation setting

Select whether or not the image on the reverse side is rotated 180 degrees in the duplex copy mode.

1. Select “F25” and press the enter key.
2. Select “ON” or “OFF” and press the enter key.
   Setting range: ON (rotate)/OFF (no rotation)

Margin width

Sets the default setting of the margin width for the margin copying.

1. Select “F26” and press the enter key.
2. Select the setting and press the enter key.
   Setting range: 1 to 18 mm

Border erase width

Sets the default setting of the border erase width for the border erase mode.

1. Select “F27” and press the enter key.
2. Select the setting and press the enter key.
   Setting range: 6 mm/12 mm/18 mm

4 in 1 layout setting

Sets the layoout for the order in which the originals will appear in the 4 in 1 layout mode.

1. Select “F28” and press the enter key.
2. Select the setting and press the enter key.
   Setting range: 1 to 4

Aggregate copy borderline

Selects the type of borderline to be usedf in the layout mode.

1. Select “F29” and press the enter key.
2. Select the setting and press the enter key.
   Setting range: 1 (no borderline)/2 (solid line)/ 3 (dotted line)

Rotate sort

Sets whether or not to perform rotate sorting when the sort mode is selected.

1. Select “F30” and press the enter key.
2. Select “ON” or “OFF” and press the enter key.
   Setting range: ON (enabled)/OFF (disabled)

Silent mode transition time

Set the silent mode transition time after copying.

1. Select “F31” and press the enter key.
2. Select the setting and press the enter key.
   Setting range: 0 sec/5 sec/10 sec/ 15 sec/30 sec

Auto clear setting

Sets whether the auto clear function is available.

1. Select “F32” and press the enter key.
2. Select “ON” or “OFF” and press the enter key.
   Setting range: ON (enabled)/OFF (disabled)

Auto off setting

Sets whether the auto off function is available.

1. Select “F33” and press the enter key.
2. Select “ON” or “OFF” and press the enter key.
   Setting range: ON (enabled)/OFF (disabled)

Auto clear time

Sets the auto clear time.

1. Select “F34” and press the enter key.
2. Select the setting and press the enter key.
   Setting range: 10 to 270 sec

Auto preheat time

Sets the auto preheat time.

1. Select “F35” and press the enter key.
2. Select the setting and press the enter key.
   Setting range: 1 min/5 min/15 min/30 min/45 min/60 min/90 min/120 min/180 min/240 min

Auto shutoff time

Sets the auto shutoff time.

1. Select “F36” and press the enter key.
2. Select the setting and press the enter key.
   Setting range: 15 min/30 min/45 min/60 min/ 90 min/120 min/180 min/240 min

Alarm

The alarm can be set to sound when errors occur.

1. Select “F37” and press the enter key.
2. Select “ON” or “OFF” and press the enter key.
   Setting range: ON (sound alarm)/ OFF (no alarm)

Toner coverage report

Prints out a report that shows the number of copies made and the blackness ratio for each paper size.

1. Select “F38” and press the enter key.
   If A4/11" × 8 1/2" paper is present, the list is automatically printed out. Otherwise, select the paper source and press the start key.

1-5-1 Paper misfeed detection

(1) Paper misfeed indication

When a paper misfeed occurs, the copier immediately stops copying and displays the jam location on the operation panel.
Paper misfeed counts sorted by the detection condition can be checked in maintenance item U903.
To remove paper jammed in the copier, open the front cover, left cover, or pull the drawer out.
To remove original jammed in the DP, open the DP original cover.
Paper misfeed detection can be reset by opening and closing the respective covers to turn safety switch off and on.

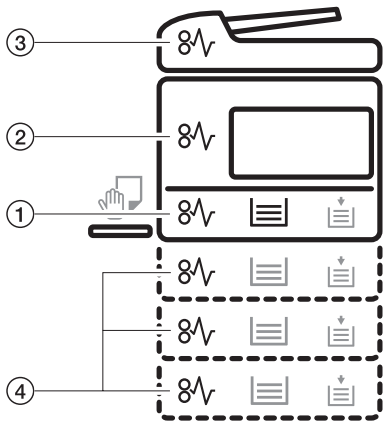

Figure 1-5-1

① Misfeed in the paper feed section
② Misfeed in the paper conveying section
③ Misfeed in the optional DP
④ Misfeed in the optional paper feeder

(2) Paper misfeed detection conditions

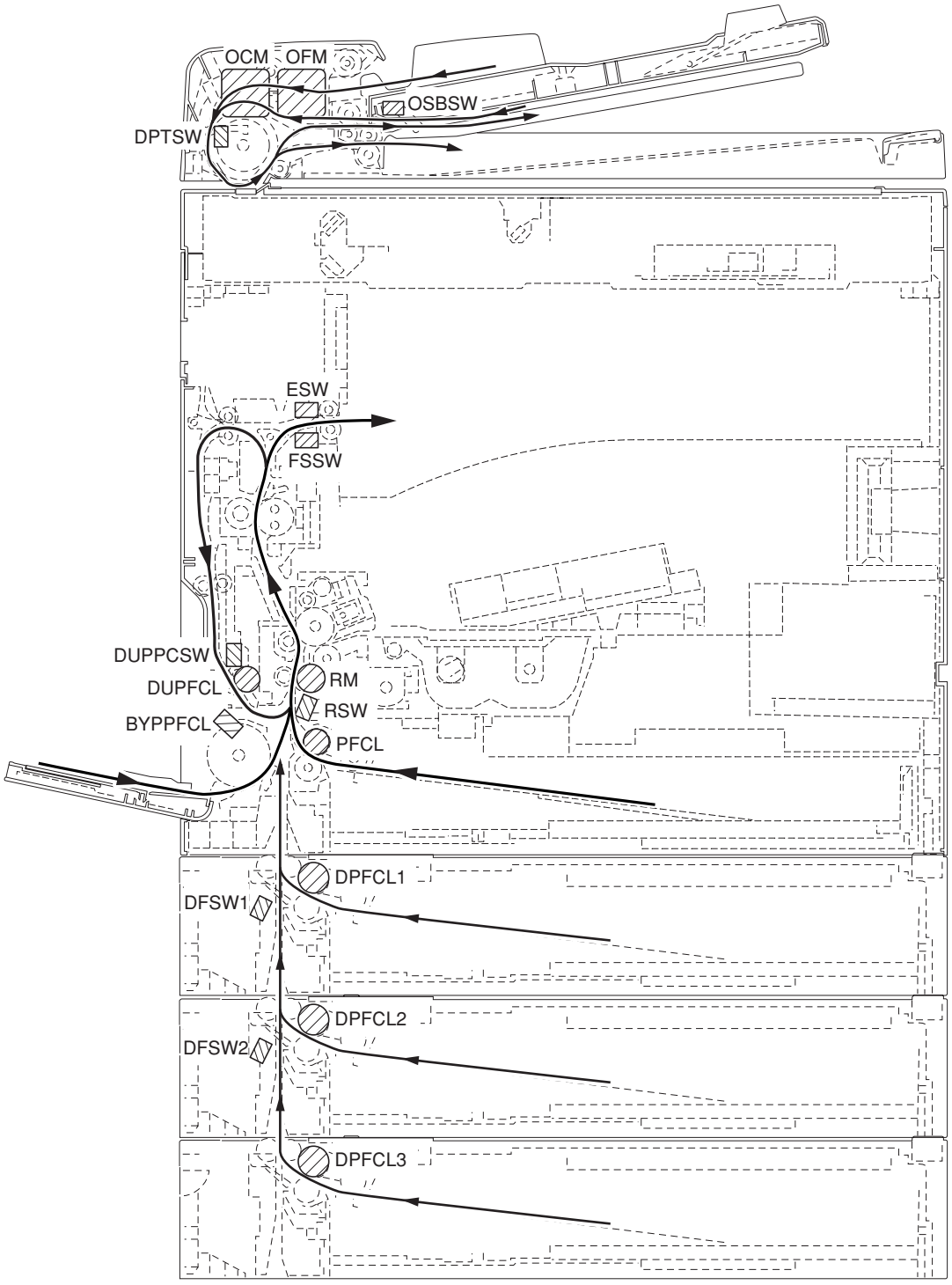

Figure 1-5-2

Section	Jam code	Description	Conditions
System	00	No paper feed	When the power switch is turned on, the machine detects activation of the registration switch (RSW), the exit switch (ESW) or the feedshift switch (FSSW).
	04	Cover open JAM	A cover open state is detected during copying.
	05	Secondary paper feed timeout	When the machine waits for secondary paper feed, 15 s or more have elapsed.
Paper feed section	10	No paper feed from the bypass tray	The registration switch (RSW) does not turn on within 1680 ms of the bypass paper feed clutch (BYPPFCL) turning on; the clutch is then successively held off for 1 s and turned back on once, but the switch again fails to turn on within 1680 ms.
	11	No paper feed from the drawer 1	The registration switch (RSW) does not turn on within 1254 ms of the paper feed clutch (PFCL) turning on; the clutch is then successively held off for 1 s and turned back on once, but the switch again fails to turn on within 1254 ms.
	12	No paper feed from the drawer 2* (first paper feeder)	The registration switch (RSW) does not turn on within 2780 ms of the drawer paper feed clutch 1 (DPFCL1)* turning on; the clutch is then successively held off for 1 s and turned back on once, but the switch again fails to turn on within 2780 ms.
	13	No paper feed from the drawer 3* (second paper feeder)	The drawer feed switch 1 (DFSW1)* does not turn on within 2490 ms of the drawer paper feed clutch 2 (DPFCL2)* turning on; the clutch is then successively held off for 1 s and turned back on once, but the switch again fails to turn on within 2490 ms.
	14	No paper feed from the drawer 4* (third paper feeder)	The drawer feed switch 2 (DFSW2)* does not turn on within 2490 ms of the drawer paper feed clutch 3 (DPFCL3)* turning on; the clutch is then successively held off for 1 s and turned back on once, but the switch again fails to turn on within 2490 ms.
	15	Misfeed in vertical paper conveying 1	The registration switch (RSW) does not turn on within 2340 ms of drawer feed switch 1 (DFSW1)* turning on.
			The drawer feed switch 1 (DFSW1)* does not turn off within 2050 ms of drawer feed switch 2 (DFSW2)* turning on.
			The drawer feed switch 1 (DFSW1)* does not turn off within 2050 ms of drawer feed switch 2 (DFSW2)* turning off.
	16	Misfeed in vertical paper conveying 2	The drawer feed switch 1 (DFSW1)* does not turn on within 2050 ms of drawer feed switch 2 (DFSW2)* turning on.
Paper conveying section	20	Multiple sheets in the bypass tray	The registration switch (RSW) does not turn off within 5320 ms of registration switch (RSW) turning on.
			The registration switch (RSW) does not turn off within 1680 ms of bypass paper feed clutch (BYPPFCL) turning on.
	21	Multiple sheets in the drawer 1	The registration switch (RSW) does not turn off within 5320 ms of registration switch (RSW) turning on.
			The registration switch (RSW) does not turn off within 1254 ms of paper feed clutch (PFCL) turning on.

*: Optional.

Section	Jam code	Description	Conditions
Paper conveying section	22	Multiple sheets in the drawer 2* (first paper feeder)	The registration switch (RSW) does not turn off within 4320 ms of registration switch (RSW) turning on.
			The registration switch (RSW) does not turn off within 2482 ms of drawer paper feed clutch 1 (DPFCL1)* turning on.
	23	Multiple sheets in the drawer 3* (second paper feeder)	The drawer feed switch 1 (DFSW1)* does not turn off within 5267 ms of drawer feed switch 1 (DFSW1)* turning on.
			The rdrawer feed switch 1 (DFSW1)* does not turn off within 2223 ms of drawer paper feed clutch 2 (DPFCL2)* turning on.
	24	Multiple sheets in the drawer 4* (third paper feeder)	The drawer feed switch 2 (DFSW2)* does not turn off within 5267 ms of drawer feed switch 2 (DFSW2)* turning on.
			The rdrawer feed switch 2 (DFSW2)* does not turn off within 2223 ms of drawer paper feed clutch 3 (DPFCL3)* turning on.
Transfer section	30	Misfeed in registration/ transfer section	A signal other than secondary paper feed start is received when the machine is waiting for secondary paper feed.
Fixing section	40	Misfeed in the fixing section	The exit switch (ESW) does not turn on within 3020 ms of the registration motor (RM) turning on.
Exit section	50	Misfeed in the exit section	The exit switch (ESW) does not turn off within 3020 ms of the registration switch (RSW) turning off.
			The exit switch (ESW) does not turn on within 3020 ms of the registration motor (RM) turning on.
Feedshift section	52	Misfeed in the feedshift section	The feedshift switch (FSSW) does not turn on within 5320 ms of feedshift switch (FSSW) turning on.
			The feedshift switch (FSSW) does not turn off within 1530 ms of paper switchback.
			The feedshift switch (FSSW) does not turn on within 1530 ms of paper switchback.
Duplex section	60	Misfeed in duplex paper conveying section*	The duplex paper conveying switch (DUPPCSW)* does not turn off within 3280 ms of the feedshift switch (FSSW) turning on.
			The duplex paper conveying switch (DUPPCSW)* does not turn on within 3280 ms of the feedshift switch (FSSW) turning on.
			The duplex paper conveying switch (DUPPCSW)* does not turn off within 3280 ms of the feedshift switch (FSSW) turning off.
	61	Misfeed in duplex exit section*	The registration switch (RSW) does not turn on within 1760 ms of the duplex paper conveying switch (DUPPCSW)* turning on.
			The registration switch (RSW) does not turn off within 1760 ms of the duplex paper conveying switch (DUPPCSW)* turning off.
DP	70	No original feed*	During the primary feed of the second original in the single-sided or double-sided original mode, even if retry operation is performed five times, primary original feed is not performed.

*: Optional.

Section	Jam code	Description	Conditions
DP	71	An original jam in the original conveying section 1*	During the secondary original feed in the single-sided or double-sided original mode, the DP timing switch (DPTSW)* does not turn off within 6500 ms of the original conveying motor (OCM)* turning on.
	72	An original size error jam*	During the secondary original feed in the single-sided or double-sided original mode, the DP timing switch (DPTSW)* does turn off within 750 ms of the original conveying motor (OCM)* turning on.
	73	An original jam in the original conveying section 2*	During scanning of the second side or reversing of the original for ejection in the double-sided original mode, the DP timing switch (DPTSW)* does not turn off within 6500 ms of the original conveying motor (OCM)* turning on.
	74	An original jam in the original conveying section 3*	During scanning of the second side or reversing of the original for ejection in the double-sided original mode, the DP timing switch (DPTSW)* does not turn on within 750 ms of the original conveying motor (OCM)* turning on.
	75	An original jam in the original switchback section*	During the switchback operation of an original in the double-sided original mode, the original switchback switch (OSBSW) *does not turn on within 1300 ms of the original conveying motor (OCM)* turning on.

*: Optional.

(3) Paper misfeeds

• Copier

Problem	Causes/check procedures	Corrective measures
(1) A paper jam in the paper feed, paper conveying or exit section is indicated as soon as the power switch is turned on. Jam code 00	A piece of paper torn from copy paper is caught around registration switch, exit sensor or feedshift switch.	Check visually and remove it, if any.
	Defective registration switch.	Run maintenance item U031 and turn registration switch on and off manually. Replace registration switch if indication of the corresponding switch is not light.
	Defective exit switch.	Run maintenance item U031 and turn exit switch on and off manually. Replace exit switch if indication of the corresponding switch is not light.
	Defective feedshift switch.	Run maintenance item U031 and turn feedshift switch on and off manually. Replace feedshift switch if indication of the corresponding switch is not light.
(2) A paper jam in the paper feed section is indicated during copying (no paper feed from the bypass tray). Jam code 10	Paper on the bypass tray is extremely curled.	Change the paper.
	Check if the bypass paper feed pulley is deformed.	Check visually and replace any deformed pulley.
	Broken registration switch actuator.	Check visually and replace registration switch if its actuator is broken.
	Defective registration switch.	Run maintenance item U031 and turn registration switch on and off manually. Replace registration switch if indication of the corresponding switch is not light.
	Check if the bypass paper feed clutch malfunctions.	Run maintenance item U032 and select the bypass paper feed clutch to be turned on and off. Check the status and remedy if necessary.
	Electrical problem with the bypass paper feed clutch.	Check (see page 1-5-29).
(3) A paper jam in the paper feed section is indicated during copying (no paper feed from the drawer 1). Jam code 11	Paper in the drawer is extremely curled.	Change the paper.
	Check if the paper feed pulley, separation pulley or forward pulley is deformed.	Check visually and replace any deformed pulley.
	Broken registration switch actuator.	Check visually and replace registration switch if its actuator is broken.
	Defective registration switch.	Run maintenance item U031 and turn registration switch on and off manually. Replace registration switch if indication of the corresponding switch is not light.
	Check if the paper feed clutch malfunctions.	Run maintenance item U032 and select the paper feed clutch to be turned on and off. Check the status and remedy if necessary.
	Electrical problem with the paper feed clutch.	Check (see page 1-5-29).

Problem	Causes/check procedures	Corrective measures
(4) A paper jam in the paper feed section is indicated during copying (no paper feed from the drawer 2). Jam code 12	Paper in the first paper feeder is extremely curled.	Change the paper.
	Check if the paper feed pulley, separation pulley or forward pulley in the first paper feeder is deformed.	Check visually and replace any deformed pulley.
	Broken registration switch actuator.	Check visually and replace registration switch if its actuator is broken.
	Defective registration switch.	Run maintenance item U031 and turn registration switch on and off manually. Replace registration switch if indication of the corresponding switch is not light.
	Check if the drawer paper feed clutch 1 malfunctions.	Run maintenance item U032 and select the drawer paper feed clutch 1 to be turned on and off. Check the status and remedy if necessary.
	Electrical problem with the drawer paper feed clutch 1.	Check.
(5) A paper jam in the paper feed section is indicated during copying (no paper feed from the drawer 3). Jam code 13	Paper in the second paper feeder is extremely curled.	Change the paper.
	Check if the paper feed pulley, separation pulley or forward pulley in the second paper feeder is deformed.	Check visually and replace any deformed pulley.
	Broken drawer feed switch 1 actuator.	Check visually and replace drawer feed switch 1 if its actuator is broken.
	Defective drawer feed switch 1.	Run maintenance item U031 and turn drawer feed switch 1 on and off manually. Replace drawer feed switch 1 if indication of the corresponding switch is not light.
	Check if the drawer paper feed clutch 2 malfunctions.	Run maintenance item U032 and select the drawer paper feed clutch 2 to be turned on and off. Check the status and remedy if necessary.
	Electrical problem with the drawer paper feed clutch 2.	Check.
(6) A paper jam in the paper feed section is indicated during copying (no paper feed from the drawer 4). Jam code 14	Paper in the third paper feeder is extremely curled.	Change the paper.
	Check if the paper feed pulley, separation pulley or forward pulley in the third paper feeder is deformed.	Check visually and replace any deformed pulley.
	Broken drawer feed switch 2 actuator.	Check visually and replace drawer feed switch 2 if its actuator is broken.
	Defective drawer feed switch 2.	Run maintenance item U031 and turn drawer feed switch 2 on and off manually. Replace drawer feed switch 2 if indication of the corresponding switch is not light.

Problem	Causes/check procedures	Corrective measures
(6) A paper jam in the paper feed section is indicated during copying (no paper feed from the drawer 4). Jam code 14	Check if the drawer paper feed clutch 3 malfunctions.	Run maintenance item U032 and select the drawer paper feed clutch 3 to be turned on and off. Check the status and remedy if necessary.
	Electrical problem with the drawer paper feed clutch 3.	Check.
(7) A paper jam in the paper feed section is indicated during copying (misfeed in vertical paper conveying 1). Jam code 15	Broken registration switch actuator.	Check visually and replace registration switch if its actuator is broken.
	Defective registration switch.	Run maintenance item U031 and turn registration switch on and off manually. Replace registration switch if indication of the corresponding switch is not light.
	Broken drawer feed switch 1 actuator.	Check visually and replace drawer feed switch 1 if its actuator is broken.
	Defective drawer feed switch 1.	Run maintenance item U031 and turn drawer feed switch 1 on and off manually. Replace drawer feed switch 1 if indication of the corresponding switch is not light.
	Broken drawer feed switch 2 actuator.	Check visually and replace drawer feed switch 2 if its actuator is broken.
	Defective drawer feed switch 2.	Run maintenance item U031 and turn drawer feed switch 2 on and off manually. Replace drawer feed switch 2 if indication of the corresponding switch is not light.
	Check if the paper feed clutch malfunctions.	Run maintenance item U032 and select the paper feed clutch to be turned on and off. Check the status and remedy if necessary.
	Electrical problem with the paper feed clutch.	Check (see page 1-5-29).
	Check if the drawer paper feed clutch 1 malfunctions.	Run maintenance item U032 and select the drawer paper feed clutch 1 to be turned on and off. Check the status and remedy if necessary.
	Electrical problem with the drawer paper feed clutch 1.	Check.
	Check if the drawer paper feed clutch 2 malfunctions.	Run maintenance item U032 and select the drawer paper feed clutch 2 to be turned on and off. Check the status and remedy if necessary.
	Electrical problem with the drawer paper feed clutch 2.	Check.
	Check if the drawer paper feed clutch 3 malfunctions.	Run maintenance item U032 and select the drawer paper feed clutch 3 to be turned on and off. Check the status and remedy if necessary.
	Electrical problem with the drawer paper feed clutch 3.	Check.

Problem	Causes/check procedures	Corrective measures
(8) A paper jam in the paper feed section is indicated during copying (misfeed in vertical paper conveying 2). Jam code 16	Broken drawer feed switch 1 actuator.	Check visually and replace drawer feed switch 1 if its actuator is broken.
	Defective drawer feed switch 1.	Run maintenance item U031 and turn drawer feed switch 1 on and off manually. Replace drawer feed switch 1 if indication of the corresponding switch is not light.
	Broken drawer feed switch 2 actuator.	Check visually and replace drawer feed switch 2 if its actuator is broken.
	Defective drawer feed switch 2.	Run maintenance item U031 and turn drawer feed switch 2 on and off manually. Replace drawer feed switch 2 if indication of the corresponding switch is not light.
	Check if the drawer paper feed clutch 1 malfunctions.	Run maintenance item U032 and select the drawer paper feed clutch 1 to be turned on and off. Check the status and remedy if necessary.
	Electrical problem with the drawer paper feed clutch 1.	Check.
	Check if the drawer paper feed clutch 2 malfunctions.	Run maintenance item U032 and select the drawer paper feed clutch 2 to be turned on and off. Check the status and remedy if necessary.
	Electrical problem with the drawer paper feed clutch 2.	Check.
(9) A paper jam in the paper conveying section is indicated during copying (multiple sheets in the bypass tray). Jam code 20	Deformed guides along the paper conveying path.	Repair or replace if necessary.
	Broken registration switch actuator.	Check visually and replace registration switch if its actuator is broken.
	Defective registration switch.	Run maintenance item U031 and turn registration switch on and off manually. Replace registration switch if indication of the corresponding switch is not light.
	Check if the bypass paper feed clutch malfunctions.	Run maintenance item U032 and select the bypass paper feed clutch to be turned on and off. Check the status and remedy if necessary.
	Electrical problem with the bypass paper feed clutch.	Check (see page 1-5-29).
	Check if the right and left registration rollers contact each other.	Check visually and remedy if necessary.
(10) A paper jam in the paper conveying section is indicated during copying (multiple sheets in the drawer 1). Jam code 21	Deformed guides along the paper conveying path.	Repair or replace if necessary.
	Broken registration switch actuator.	Check visually and replace registration switch if its actuator is broken.
	Defective registration switch.	Run maintenance item U031 and turn registration switch on and off manually. Replace registration switch if indication of the corresponding switch is not light.
	Check if the paper feed clutch malfunctions.	Run maintenance item U032 and select the paper feed clutch to be turned on and off. Check the status and remedy if necessary.

Problem	Causes/check procedures	Corrective measures
(10) A paper jam in the paper conveying section is indicated during copying (multiple sheets in the drawer 1). Jam code 21	Electrical problem with the paper feed clutch.	Check (see page 1-5-29).
	Check if the right and left registration rollers contact each other.	Check visually and remedy if necessary.
(11) A paper jam in the paper conveying section is indicated during copying (multiple sheets in the drawer 2). Jam code 22	Deformed guides along the paper conveying path.	Repair or replace if necessary.
	Broken registration switch actuator.	Check visually and replace registration switch if its actuator is broken.
	Defective registration switch.	Run maintenance item U031 and turn registration switch on and off manually. Replace registration switch if indication of the corresponding switch is not light.
	Check if the drawer paper feed clutch 1 malfunctions.	Run maintenance item U032 and select the drawer paper feed clutch 1 to be turned on and off. Check the status and remedy if necessary.
	Electrical problem with the drawer paper feed clutch 1.	Check.
	Check if the right and left registration rollers contact each other.	Check visually and remedy if necessary.
(12) A paper jam in the paper conveying section is indicated during copying (multiple sheets in the drawer 3). Jam code 23	Deformed guides along the paper conveying path.	Repair or replace if necessary.
	Broken drawer feed switch 1 actuator.	Check visually and replace drawer feed switch 1 if its actuator is broken.
	Defective drawer feed switch 1.	Run maintenance item U031 and turn drawer feed switch 1 on and off manually. Replace drawer feed switch 1 if indication of the corresponding switch is not light.
	Check if the drawer paper feed clutch 2 malfunctions.	Run maintenance item U032 and select the drawer paper feed clutch 2 to be turned on and off. Check the status and remedy if necessary.
	Electrical problem with the drawer paper feed clutch 2.	Check.
(13) A paper jam in the paper conveying section is indicated during copying (multiple sheets in the drawer 4). Jam code 24	Deformed guides along the paper conveying path.	Repair or replace if necessary.
	Broken drawer feed switch 2 actuator.	Check visually and replace drawer feed switch 2 if its actuator is broken.
	Defective drawer feed switch 2.	Run maintenance item U031 and turn drawer feed switch 2 on and off manually. Replace drawer feed switch 2 if indication of the corresponding switch is not light.
	Check if the drawer paper feed clutch 3 malfunctions.	Run maintenance item U032 and select the drawer paper feed clutch 3 to be turned on and off. Check the status and remedy if necessary.

Problem	Causes/check procedures	Corrective measures
(13) A paper jam in the paper conveying section is indicated during copying (multiple sheets in the drawer 4). Jam code 24	Electrical problem with the drawer paper feed clutch 3.	Check.
(14) A paper jam in the fixing section is indicated during copying (misfeed in the fixing section). Jam code 40	Check if the fixing unit front guide is deformed.	Repair or replace if necessary.
	Check if the press roller is extremely dirty or deformed.	Clean or replace if necessary.
	Check if the heat roller separation claws are dirty or deformed.	Clean or replace if necessary.
	Check if the heat roller and its separation claws contact each other.	Remedy if the separation claw springs are out of place.
	Broken exit switch actuator.	Check visually and replace the exit switch if its actuator is broken.
	Defective exit switch.	Run maintenance item U031 and turn exit switch on and off manually. Replace exit switch if indication of the corresponding switch is not light.
	Check if the registration motor malfunctions.	Run maintenance item U030 and select the registration motor to be turned on and off. Check the status and remedy if necessary.
	Electrical problem with the registration motor.	Check (see page 1-5-28).
(15) A paper jam in the exit section is indicated during copying (misfeed in the exit section). Jam code 50	Broken registration switch actuator.	Check visually and replace registration switch if its actuator is broken.
	Defective registration switch.	Run maintenance item U031 and turn registration switch on and off manually. Replace registration switch if indication of the corresponding switch is not light.
	Broken exit switch actuator.	Check visually and replace the exit switch if its actuator is broken.
	Defective exit switch.	Run maintenance item U031 and turn exit switch on and off manually. Replace exit switch if indication of the corresponding switch is not light.
	Check if the registration motor malfunctions.	Run maintenance item U030 and select the registration motor to be turned on and off. Check the status and remedy if necessary.
	Electrical problem with the registration motor.	Check (see page 1-5-28).

Problem	Causes/check procedures	Corrective measures
(16) A paper jam in the feedshift section is indicated during copying (misfeed in the feedshift section). Jam code 52	Broken feedshift switch actuator.	Check visually and replace the feedshift switch if its actuator is broken.
	Defective feedshift switch.	Run maintenance item U031 and turn feedshift switch on and off manually. Replace feedshift switch if indication of the corresponding switch is not light.
	Check if the exit motor malfunctions.	Run maintenance item U030 and select the exit motor to be turned on and off. Check the status and remedy if necessary.
	Electrical problem with the exit motor.	Check (see page 1-5-28).
(17) A paper jam in the duplex section is indicated during copying (misfeed in duplex paper conveying section). Jam code 60	Broken feedshift switch actuator.	Check visually and replace the feedshift switch if its actuator is broken.
	Defective feedshift switch.	Run maintenance item U031 and turn feedshift switch on and off manually. Replace feedshift switch if indication of the corresponding switch is not light.
	Broken duplex paper conveying switch actuator.	Check visually and replace the duplex paper conveying switch if its actuator is broken.
	Defective duplex paper conveying switch.	Run maintenance item U031 and turn duplex paper conveying switch on and off manually. Replace duplex paper conveying switch if indication of the corresponding switch is not light.
	Check if the exit motor malfunctions.	Run maintenance item U030 and select the exit motor to be turned on and off. Check the status and remedy if necessary.
	Electrical problem with the exit motor.	Check (see page 1-5-28).
	Check if the duplex feed clutch malfunctions.	Check visually and remedy if necessary.
	Electrical problem with the duplex feed clutch.	Check.
(18) A paper jam in the duplex section is indicated during copying (misfeed in duplex exit section). Jam code 61	Broken duplex paper conveying switch actuator.	Check visually and replace the duplex paper conveying switch if its actuator is broken.
	Defective duplex paper conveying switch.	Run maintenance item U031 and turn duplex paper conveying switch on and off manually. Replace duplex paper conveying switch if indication of the corresponding switch is not light.
	Broken registration switch actuator.	Check visually and replace the registration switch if its actuator is broken.
	Defective registration switch.	Run maintenance item U031 and turn registration switch on and off manually. Replace registration switch if indication of the corresponding switch is not light.
	Check if the duplex feed clutch malfunctions.	Check visually and remedy if necessary.
	Electrical problem with the duplex feed clutch.	Check.

• **DP**

Problem	Causes/check procedures	Corrective measures
(1) An original jams when the power switch is turned on.	A piece of paper torn from an original is caught around the DP timing switch or original switchback switch.	Check visually and remove it, if any.
	Defective DP timing switch.	Run maintenance item U244 and turn DP timing switch on and off manually. Replace DP timing switch if indication of the corresponding switch is not light.
	Defective original switchback switch.	Run maintenance item U244 and turn original switchback switch on and off manually. Replace original switchback switch if indication of the corresponding switch is not light.
(2) An original jams in the original feed section is indicated during copying (no original feed). Jam code 70	Defective original set switch.	Run maintenance item U244 and turn original set switch on and off manually. Replace original set switch if indication of the corresponding switch is not light.
	Check if the original feed motor malfunctions.	Run maintenance item U243 and select the original feed motor to be turned on and off. Check the status and remedy if necessary.
	Check if the DP paper feed pulley or DP separation pad is deformed.	Check visually and replace the deformed pulley.
(3) An original jams in the original conveying section is indicated during copying (An original jam in the original conveying section 1). Jam code 71	Broken DP timing switch actuator.	Check visually and replace DP timing switch if its actuator is broken.
	Defective DP timing switch.	Run maintenance item U244 and turn DP timing switch on and off manually. Replace DP timing switch if indication of the corresponding switch is not light.
	Check if the original conveying motor malfunctions.	Run maintenance item U243 and select the original conveying motor to be turned on and off. Check the status and remedy if necessary.
(4) An original jams in the original conveying section is indicated during copying (An original size error jam). Jam code 72	Broken DP timing switch actuator.	Check visually and replace DP timing switch if its actuator is broken.
	Defective DP timing switch.	Run maintenance item U244 and turn DP timing switch on and off manually. Replace DP timing switch if indication of the corresponding switch is not light.
	Check if the original conveying motor malfunctions.	Run maintenance item U243 and select the original conveying motor to be turned on and off. Check the status and remedy if necessary.
(5) An original jams in the original conveying section is indicated during copying (An original jam in the original conveying section 2). Jam code 73	Broken DP timing switch actuator.	Check visually and replace DP timing switch if its actuator is broken.
	Defective DP timing switch.	Run maintenance item U244 and turn DP timing switch on and off manually. Replace DP timing switch if indication of the corresponding switch is not light.
	Check if the original conveying motor malfunctions.	Run maintenance item U243 and select the original conveying motor to be turned on and off. Check the status and remedy if necessary.
	Check if the switchback feedshift solenoid malfunctions.	Run maintenance item U243 and select the switchback feedshift solenoid to be turned on and off. Check the status and remedy if necessary.

Problem	Causes/check procedures	Corrective measures
(6) An original jams in the original conveying section is indicated during copying (An original jam in the original conveying section 3). Jam code 74	Broken DP timing switch actuator.	Check visually and replace DP timing switch if its actuator is broken.
	Defective DP timing switch.	Run maintenance item U244 and turn DP timing switch on and off manually. Replace DP timing switch if indication of the corresponding switch is not light.
	Check if the original conveying motor malfunctions.	Run maintenance item U243 and select the original conveying motor to be turned on and off. Check the status and remedy if necessary.
	Check if the switchback feedshift solenoid malfunctions.	Run maintenance item U243 and select the switchback feedshift solenoid to be turned on and off. Check the status and remedy if necessary.
(7) An original jams in the original switchback section is indicated during copying (An original jam in the original switchback section). Jam code 75	Defective original switchback switch.	Run maintenance item U244 and turn original switchback switch on and off manually. Replace original switchback switch if indication of the corresponding switch is not light.
	Check if the original conveying motor malfunctions.	Run maintenance item U243 and select the original conveying motor to be turned on and off. Check the status and remedy if necessary.
	Check if the switchback feedshift solenoid malfunctions.	Run maintenance item U243 and select the switchback feedshift solenoid to be turned on and off. Check the status and remedy if necessary.
(8) Original jams frequently.	An original outside the specifications is used.	Use only originals conforming to the specifications.
	The DP forwarding pulley or DP paper feed pulley is dirty with paper powder.	Clean with isopropyl alcohol.
	The DP paper feed pulley and DP separation pad do not contact correctly.	Check and remedy.

1-5-2 Self-diagnosis

(1) Self-diagnostic function

This unit is equipped with a self-diagnostic function. When a problem is detected, copying is disabled. "C" and a number between 010 and 781 altenates, indicating the nature of the problem.

After removing the problem, the self-diagnostic function can be reset by opening and closing the front cover to turn safety switch off and on or power switch turns off and on.

(2) Self diagnostic codes

Code	Contents	Remarks	
		Causes	Check procedures/corrective measures
C010 (A010*)	**Backup memory read/write problem (main PCB)** • Read and write data does not match.	Defective backup RAM or main PCB.	Replace the main PCB and check for correct operation.
C011 (A011*)	**Backup memory data problem (main PCB)** • Data in the specified area of the backup memory does not match the specified values.	Problem with the backup memory data.	Turn safety switch off and back on and run maintenance item U020 to set the contents of the backup memory data again.
		Defective backup RAM.	If the C011 is displayed after re-setting the backup memory contents, replace the backup RAM or main PCB.
C015 (A015*)	**Backup memory read/write problem (engine PCB)** • Read and write data does not match.	Defective backup RAM or engine PCB.	Replace the engine PCB and check for correct operation.
C016 (A016*)	**Backup memory data problem (engine PCB)** • Data in the specified area of the backup memory does not match the specified values.	Problem with the backup memory data.	Turn safety switch off and back on and run maintenance item U020 to set the contents of the backup memory data again.
		Defective backup RAM.	If the C016 is displayed after re-setting the backup memory contents, replace the backup RAM or engine PCB.
C0170	**Accounting count problem** • When the power is turned on, the total count and the scan count are abnormal both on the main PCB and the engine PCB.	Defective main PCB or engine PCB.	Replace the main PCB or engine PCB and check for correct operation.
C018	**Machine number mismatch** • When the power is turned on, the machine number does not match between the main PCB and the engine PCB.	Correct EEPROM is not installed.	Install the correct EEPROM. If it does not solve the problem, contact the Service Administrative Division.
		Data damage of EEPROM.	Contact the Service Administrative Division.
C021 (A021*)	**Communication problem between the main PCB and engine board PCB** • When the power is turned on, the machine does not detect the low level of SBSY and the high level of SDIR for three seconds.	Poor contact in the connector terminals.	Check the connection of connectors YC6 on the main PCB and YC1 on the engine PCB, and the continuity across the connector terminals. Repair or replace if necessary.
		Defective main PCB or engine PCB.	Replace the main PCB or engine PCB and check for correct operation.
C041 (A041*)	**Optional DP communication problem** • Communication fails five times successively.	DP installed incorrectly.	Check the installation state of the DP and adjust it if it is not properly installed.
		Defective main PCB or DP driver PCB.	Replace the main PCB or DP driver PCB and check for correct operation.

"A" is displayed on the operation panel.

Code	Contents	Remarks	
		Causes	Check procedures/corrective measures
C042 (A042*)	**Optional first paper feeder communication problem** • Communication fails five times successively.	Paper feeder installed incorrectly.	Check the installation state of the paper feeder and adjust it if it is not properly installed.
		Defective main PCB or drawer main PCB.	Replace the main PCB or drawer main PCB and check for correct operation.
C050 (A050*)	**Optional second paper feeder communication problem** • Communication fails five times successively.	Paper feeder installed incorrectly.	Check the installation state of the paper feeder and adjust it if it is not properly installed.
		Defective main PCB or drawer main PCB.	Replace the main PCB or drawer main PCB and check for correct operation.
C051 (A051*)	**Optional third paper feeder communication problem** • Communication fails five times successively.	Paper feeder installed incorrectly.	Check the installation state of the paper feeder and adjust it if it is not properly installed.
		Defective main PCB or drawer main PCB.	Replace the main PCB or drawer main PCB and check for correct operation.
C061 (A061*)	**Bitmap (DIMM) problem** • There is a problem with the data or address bus of the bitmap DRAM.	Defective main PCB.	Replace the main PCB and check for correct operation.
		DIMM installed incorrectly.	Check if the DIMM is inserted into the socket on the main PCB correctly.
		Defective DIMM.	Replace the DIMM and check for correct operation.
C062 (A062*)	**Memory input interface problem** • Reading-in of an image does not complete within 10 s of the start of image transmission.	Defective main PCB.	Replace the main PCB and check for correct operation.
C063 (A063*)	**DMA problem** • DMA transmission of compressed, decompressed, rotated, relocated or blanked-out image data does not complete within the specified period of time.	Defective main PCB.	Replace the main PCB and check for correct operation.
C080 (A080*)	**Image processing problem** • JAM05 is detected twice.	Defective engine PCB.	Replace the engine PCB and check for correct operation.
C200	**Drive motor problem** • LOCK ALM signal remains high for 1 s, 1 s after the drive motor has turned on.	Poor contact in the main motor connector terminals.	Reinsert the connector. Also check for continuity within the connector cable. If none, remedy or replace the cable.
		Defective drive motor rotation control circuit.	Replace the drive motor.
		Defective drive transmission system.	Check if the rollers and gears rotate smoothly. If not, grease the bushings and gears. Check for broken gears and replace if any.

"A" is displayed on the operation panel.

Code	Contents	Remarks	
		Causes	Check procedures/corrective measures
C310	**Scanner carriage problem** • The home position is not correct when the power is turned on or copying the document placed on the contact glass.	Poor contact of the connector terminals.	Reinsert the connector. Also check for continuity within the connector cable. If none, remedy or replace the cable.
		Defective scanner home position switch.	Replace the scanner home position switch.
		Defective engine PCB.	Replace the engine PCB and check for correct operation.
		Defective scanner motor.	Replace the scanner motor.
C320 (A320*)	**Exposure lamp problem** • In indicator check before starting copying, the average value in scanning of the shading plate with the CCD is 128 or more.	Poor contact of the connector terminals.	Reinsert the connector. Also check for continuity within the connector cable. If none, remedy or replace the cable.
		Defective exposure lamp or inverter board.	Replace the exposure lamp or inverter board.
		Defective engine PCB.	Replace the engine PCB and check for correct operation.
		Incorrect shading position.	Adjust the position of the contact glass (shading plate). If the problem still occurs, replace the scanner home position switch.
C330 (A330*)	**Optical system (AGC) problem** • After AGC, correct input is not obtained at CCD.	Insufficient exposure lamp luminosity.	Replace the exposure lamp or inverter board.
		Defective engine PCB.	Replace the engine PCB and check for correct operation.
		Incorrect shading position.	Adjust the position of the contact glass (shading plate). If the problem still occurs, replace the scanner home position switch.
C400	**Polygon motor synchronization problem** • The polygon motor does not reach the stable speed within 15 s of the START signal turning on.	Poor contact in the polygon motor connector terminals.	Reinsert the connector. Also check for continuity within the connector cable. If none, remedy or replace the cable.
		Defective polygon motor.	Replace the LSU.
		Defective engine PCB.	Replace the engine PCB and check for correct operation.
C401	**Polygon motor steady-state problem** • The polygon motor rotation is not stable for 5 s after the polygon motor rotation has been stabilized.	Poor contact in the polygon motor connector terminals.	Reinsert the connector. Also check for continuity within the connector cable. If none, remedy or replace the cable.
		Defective polygon motor.	Replace the LSU.
		Defective engine PCB.	Replace the engine PCB and check for correct operation.

“A” is displayed on the operation panel.

Code	Contents	Remarks	
		Causes	Check procedures/corrective measures
C420 (A420*)	**BD steady-state problem** • The MIC detects a BD error for 600 ms after the polygon motor rotation has been stabilized.	Defective laser diode.	Replace the LSU.
		Defective polygon motor.	Replace the LSU.
		Defective main PCB.	Replace the main PCB and check for correct operation.
		Defective engine PCB.	Replace the engine PCB and check for correct operation.
C600	**Broken fixing heater wire** • In fixing warm-up, the time to reach 50°C/122 °F exceeds 13.5 s, the time to reach 100°C/212 °F exceeds 10 s, the time to reach the primary stabilization exceeds 10 s or the time to reach the secondary stabilization exceeds 24 s.	Poor contact in the thermistor connector terminals.	Reinsert the connector. Also check for continuity within the connector cable. If none, remedy or replace the cable.
		Fixing thermistor installed incorrectly.	Check and reinstall if necessary.
		Fixing thermostat triggered.	Check for continuity. If none, replace the fixing thermostat.
		Fixing heater M or S installed incorrectly.	Check and reinstall if necessary.
		Broken fixing heater M or S wire.	Check for continuity. If none, replace the heater lamp.
C602	**Abnormally high fixing unit thermistor temperature** • The fixing temperature exceeds 230°C/446 °F for 40 ms.	Shorted thermistor.	Measure the resistance. If it is 0 Ω, replace the thermistor.
		Broken heater control circuit on the power supply PCB.	Replace the power supply PCB and check for correct operation.
C605	**Abnormally low fixing unit thermistor temperature** • The fixing temperature remains below 90°C/194°F for 1 s.	Poor contact in the thermistor connector terminals.	Reinsert the connector. Also check for continuity within the connector cable. If none, remedy or replace the cable.
		Broken fixing thermistor wire.	Measure the resistance. If it is ∞ Ω, replace the fixing thermistor.
		Fixing thermistor installed incorrectly.	Check and reinstall if necessary.
		Fixing thermostat triggered.	Check for continuity. If none, replace the fixing thermostat.
		Fixing heater M or S installed incorrectly.	Check and reinstall if necessary.
		Broken fixing heater M or S wire.	Check for continuity. If none, replace the fixing heater M or S.

"A" is displayed on the operation panel.

Code	Contents	Remarks	
		Causes	Check procedures/corrective measures
C640	**Zero-crossing signal problem** • The engine PCB does not detect the zero-crossing signal for the time specified below. At power-on: 3 s Others: 5 s	Poor contact in the connector terminals.	Reinsert the connector. Also check for continuity within the connector cable. If none, remedy or replace the cable.
		Defective power supply PCB.	Check if the zero-crossing signal is output from CN2-5 on the power supply PCB. If not, replace the power supply PCB.
		Defective engine PCB.	Replace the engine PCB if C640 is detected while CN2-5 on the power supply PCB outputs the zero-crossing signal.
C780	**Broken external temperature thermistor** • The input voltage is 0.5 V or less.	Poor contact in the humidity sensor connector terminals.	Reinsert the connector. Also check for continuity within the connector cable. If none, remedy or replace the cable.
		Defective humidity sensor.	Replace the drawer PCB and check for correct operation.
C781	**Short-circuited external temperature thermistor** • The input voltage is 4.5 V or more.	Poor contact in the humidity sensor connector terminals.	Reinsert the connector. Also check for continuity within the connector cable. If none, remedy or replace the cable.
		Defective humidity sensor.	Replace the drawer PCB and check for correct operation.

1-5-3 Image formation problems

(1) No image appears (entirely white).

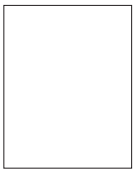

See page 1-5-21

(2) No image appears (entirely black).



See page 1-5-21

(3) Image is too light.

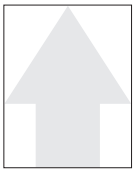

See page 1-5-22

(4) Background is visible.

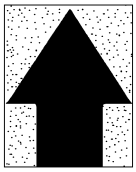

See page 1-5-22

(5) A white line appears longitudinally.

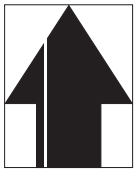

See page 1-5-22

(6) A black line appears longitudinally.

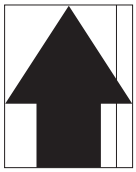

See page 1-5-23

(7) A black line appears laterally.

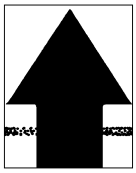

See page 1-5-23

(8) One side of the copy image is darker than the other.

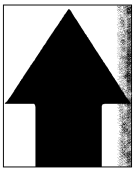

See page 1-5-23

(9) Black dots appear on the image.

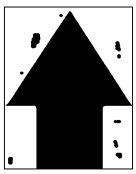

See page 1-5-24

(10) Image is blurred.

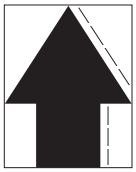

See page 1-5-24

(11) The leading edge of the image is consistently misaligned with the original.



See page 1-5-24

(12) The leading edge of the image is sporadically misaligned with the original.

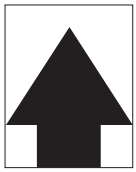

See page 1-5-25

(13) Paper creases.

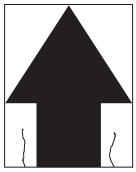

See page 1-5-25

(14) Offset occurs.

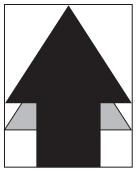

See page 1-5-25

(15) Image is partly missing.

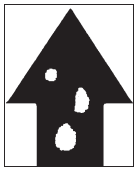

See page 1-5-26

(16) Fixing is poor.

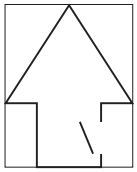

See page 1-5-26

(17) Image is out of focus.



See page 1-5-26

(18) Image center does not align with the original center.

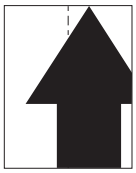

See page 1-5-27

(1) No image appears (entirely white).

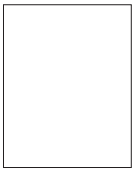

Causes
1. No transfer charging.
2. No LSU laser is output.
3. No developing bias is output.

Causes	Check procedures/corrective measures
1. No transfer charging.	
A. The connector terminals of the high-voltage PCB make poor contact.	Reinsert the connector. Also check for continuity within the connector cable. If none, remedy or replace the cable.
B. Defective engine PCB.	Replace the engine PCB and check for correct operation.
C. Defective high-voltage PCB.	Replace the high voltage PCB and check for correct operation.
2. No LSU laser is output.	
A. Defective laser scanner unit.	Replace the laser scanner unit (see page 1-6-24).
B. Defective main PCB.	Replace the main PCB and check for correct operation.
3. No developing bias is output.	
A. The connector terminals of the high-voltage PCB make poor contact.	Reinsert the connector. Also check for continuity within the connector cable. If none, remedy or replace the cable.
B. Defective engine PCB.	Replace the engine PCB and check for correct operation.
C. Defective high-voltage PCB.	Replace the high voltage PCB and check for correct operation.

(2) No image appears (entirely black).



Causes
1. No main charging.
2. Exposure lamp fails to light.

Causes	Check procedures/corrective measures
1. No main charging.	
A. Broken main charger wire.	Replace the main charger unit (see page 1-6-35).
B. Leaking main charger housing.	Clean the main charger wire, grid and shield.
C. The connector terminals of the high-voltage PCB make poor contact.	Reinsert the connector. Also check for continuity within the connector cable. If none, remedy or replace the cable.
D. Defective engine PCB.	Check if YC9-5 on the engine PCB goes low when maintenance item U100 is run. If not, replace the engine PCB.
E. Defective high-voltage PCB.	Check if main charging takes place when YC1-12 on the high-voltage PCB goes low while maintenance item U100 is run. If not, replace the high-voltage PCB.
2. Exposure lamp fails to light.	
A. The connector terminals of the exposure lamp make poor contact.	Reinsert the connector. Also check for continuity within the connector cable. If none, remedy or replace the cable.
B. Defective inverter PCB.	Check if the exposure lamp lights when YC1-1 and 1-6 on the inverter PCB go low while maintenance item U061 is run. If not, replace the inverter PCB.
C. Defective engine PCB.	Check if YC17-1 and YC17-6 on the engine PCB goes low when maintenance item U061 is run. If not, replace the engine PCB.

(3) Image is too light.



Causes
1. Insufficient toner.
2. The transfer voltage is not output properly.
3. Dirty main charger wire.
4. Dirty main charger grid.

Causes	Check procedures/corrective measures
1. Insufficient toner.	If the add toner indicator lights, replace the toner container.
2. The transfer voltage is not output properly.	Clean or check the transfer roller (see page 1-6-37).
3. Dirty main charger wire.	Clean the main charger wire or, if it is extremely dirty, replace the main chager unit (see page 1-6-35).
4. Dirty main charger grid.	Clean the main charger grid or, if it is extremely dirty, replace the main chager unit (see page 1-6-35).

(4) Background is visible.

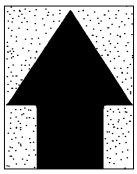

Causes
1. The developing bias voltage is not properly.
2. Dirty main charger wire.

Causes	Check procedures/corrective measures
1. The developing bias voltage is not properly.	Replace the high voltage PCB and check for correct operation.
2. Dirty main charger wire.	Clean the main charger wire or, if it is extremely dirty, replace the main chager unit (see page 1-6-35).

(5) A white line appears longitudinally.



Causes
1. Dirty main charger wire.
2. Foreign matter in the developing unit.
3. Dirty shading plate.

Causes	Check procedures/corrective measures
1. Dirty main charger wire.	Clean the main charger wire or, if it is extremely dirty, replace the main chager unit (see page 1-6-35).
2. Foreign matter in the developing unit.	Check if the magnetic brush is formed uniformly. Replace the developing unit if any foreign matter (see page 1-6-36).
3. Dirty shading plate.	Clean the shading plate.

(6) A black line appears longitudinally.

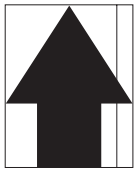

Causes
1. Dirty contact glass.
2. Dirty or flawed drum.
3. Dirty scanner mirror.
4. Dirty main charger wire.

Causes	Check procedures/corrective measures
1. Dirty contact glass.	Clean the contact glass.
2. Dirty or flawed drum.	Clean the drum or, if it is flawed, replace the drum unit (see page 1-6-33).
3. Dirty scanner mirror.	Clean the scanner mirror.
4. Dirty main charger wire.	Clean the main charger wire or, if it is extremely dirty, replace the main chager unit (see page 1-6-35).

(7) A black line appears laterally.

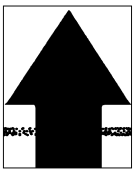

Causes
1. Dirty contact glass.
2. Dirty or flawed drum.
3. Dirty scanner mirror.
4. Dirty shading plate.
5. Leaking main charger housing.

Causes	Check procedures/corrective measures
1. Dirty contact glass.	Clean the contact glass.
2. Dirty or flawed drum.	Clean the drum or, if it is flawed, replace it (see page 1-6-33).
3. Dirty scanner mirror.	Clean the scanner mirror.
4. Dirty shading plate.	Clean the shading plate.
5. Leaking main charger housing.	Clean the main charger wire, grid and shield.

(8) One side of the copy image is darker than the other.

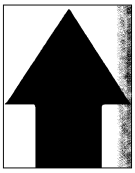

Causes
1. Dirty main charger wire.
2. Defective exposure lamp.

Causes	Check procedures/corrective measures
1. Dirty main charger wire.	Clean the main charger wire or, if it is extremely dirty, replace the main chager unit (see page 1-6-35).
2. Defective exposure lamp.	Check if the exposure lamp light is distributed evenly. If not, replace the exposure lamp and inverter PCB.

(9) Black dots appear on the image.

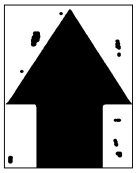

Causes
1. Dirty or flawed drum.
2. Dirty contact glass.
3. Deformed or worn cleaning blade.
4. Dirty drum separation claws.
5. Dirty heat roller separation claws.

Causes	Check procedures/corrective measures
1. Dirty or flawed drum.	Clean the drum or, if it is flawed, replace the drum unit (see page 1-6-33).
2. Dirty contact glass.	Clean the contact glass.
3. Deformed or worn cleaning blade.	Replace the drum unit (see page 1-6-33).
4. Dirty drum separation claws.	Clean the drum separation claws.
5. Dirty the heat roller separation claws.	Clean the heat roller separation claws.

(10) Image is blurred.

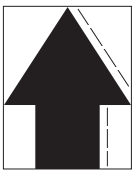

Causes
1. Scanner moves erratically.
2. Deformed press roller.
3. Paper conveying section drive problem.

Causes	Check procedures/corrective measures
1. Scanner moves erratically.	Check if there is any foreign matter on the front and rear scanner rails. If any, remove it.
2. Deformed press roller.	Replace the press roller (see page 1-6-39).
3. Paper conveying section drive problem.	Check the gears and belts and, if necessary, grease them.

(11) The leading edge of the image is consistently misaligned with the original.



Causes
1. Misadjusted leading edge registration.
2. Misadjusted scanner leading edge registration.

Causes	Check procedures/corrective measures
1. Misadjusted leading edge registration.	Readjust the leading edge registration (see pages 1-6-12).
2. Misadjusted scanner leading edge registration.	Readjust the scanner leading edge registration (see page 1-6-30).

(12) The leading edge of the image is sporadically misaligned with the original.

Causes
1. Paper feed clutch, bypass paper feed clutch or registration motor installed or operating incorrectly.

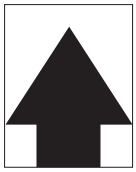

Causes	Check procedures/corrective measures
1. Paper feed clutch, bypass paper feed clutch or registration motor installed or operating incorrectly.	Check the installation position and operation of the paper feed clutch, bypass paper feed clutch and registration motor. If any of them operates incorrectly, replace it.

(13) Paper creases.

Causes
1. Paper curled.
2. Paper damp.
3. Defective pressure springs.
4. Defective separation.
5. Dirty separation electrode.

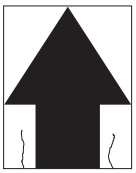

Causes	Check procedures/corrective measures
1. Paper curled.	Check the paper storage conditions.
2. Paper damp.	Check the paper storage conditions.
3. Defective pressure springs.	Replace the pressure springs.
4. Defective separation.	Check the drum separation claws and heat roller separation claws.
5. Dirty separation electrode.	Clean the separation electrode.

(14) Offset occurs.

Causes
1. Defective cleaning blade.
2. Defective fixing section.

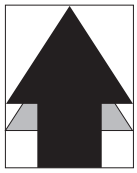

Causes	Check procedures/corrective measures
1. Defective cleaning blade.	Replace the drum unit (see page 1-6-33).
2. Defective fixing section.	Check the heat roller and press roller.

(15) Image is partly missing.

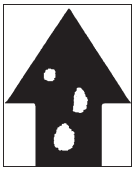

Causes
1. Paper damp.
2. Paper creased.
3. Dirty or flawed drum.
4. Dirty transfer roller.

Causes	Check procedures/corrective measures
1. Paper damp.	Check the paper storage conditions.
2. Paper creased.	Replace the paper.
3. Dirty or flawed drum.	Clean the drum or, if it is flawed, replace the drum unit (see page 1-6-33).
4. Dirty transfer roller.	Clean the transfer roller.

(16) Fixing is poor.

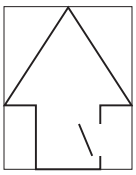

Causes
1. Wrong paper.
2. Defective pressure springs.
3. Flawed press roller.
4. Defective fixing heater.

Causes	Check procedures/corrective measures
1. Wrong paper.	Check if the paper meets specifications.
2. Defective pressure springs.	Replace the pressure springs.
3. Flawed press roller.	Replace the press roller (see page 1-6-39).
4. Defective fixing heater.	Replace the fixing heater (see page 1-6-40).

(17) Image is out of focus.



Causes
1. Defective image scanning unit.
2. Drum condensation.

Causes	Check procedures/corrective measures
1. Defective image scanning unit.	Replace the image scanning unit (see page 1-6-23).
2. Drum condensation.	Clean the drum.

(18) Image center does not align with the original center.

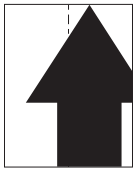

Causes
1. Misadjusted center line of image printing.
2. Misadjusted scanner center line.
3. Original placed incorrectly.

Causes	Check procedures/corrective measures
1. Misadjusted center line of image printing.	Readjust the center line of image printing (see page 1-6-14).
2. Misadjusted scanner center line.	Readjust the scanner center line (see page 1-6-31).
3. Original placed incorrectly.	Place the original correctly.

1-5-4 Electrical problems

Problem	Causes	Check procedures/corrective measures
(1) The machine does not operate when the power switch is turned on.	No electricity at the power outlet.	Measure the input voltage.
	The power cord is not plugged in properly.	Check the contact between the power plug and the outlet.
	The front cover or left cover is not closed completely.	Check the front cover and left cover.
	Broken power cord.	Check for continuity. If none, replace the cord.
	Defective power switch.	Check for continuity across the contacts. If none, replace the power switch.
	Blown fuse in the power source PCB.	Check for continuity. If none, remove the cause of blowing and replace the fuse.
	Defective front or left cover safety switch.	Check for continuity across the contacts of each switch. If none, replace the switch.
	Defective power source PCB.	With AC present, check for 24 V DC at YC1-1 and 5 V DC at YC1-7 on the power source PCB. If none, replace the power source PCB.
(2) The drive motor does not operate (C200).	Poor contact in the drive motor connector terminals.	Reinsert the connector. Also check for continuity within the connector cable. If none, remedy or replace the cable.
	Broken drive motor gear.	Check visually and replace the drive motor if necessary.
	Defective drive motor.	Run maintenance item U030 and check if the drive motor operates when YC7-5 on the engine PCB goes low. If not, replace the drive motor.
	Defective engine PCB.	Run maintenance item U030 and check if YC7-5 on the engine PCB goes low. If not, replace the engine PCB.
(3) The registration motor does not operate.	Poor contact in the registration motor connector terminals.	Reinsert the connector. Also check for continuity within the connector cable. If none, remedy or replace the cable.
	Broken registration motor gear.	Check visually and replace the registration motor if necessary.
	Defective registration motor.	Run maintenance item U030 and check if the registration motor operates when YC2-1,2,4,5 on the registration motor PCB goes low. If not, replace the registration motor.
	Defective engine PCB.	Run maintenance item U030 and check if YC4-4 on the engine PCB goes low. If not, replace the engine PCB.
(4) The exit motor does not operate.	Poor contact in the exit motor connector terminals.	Reinsert the connector. Also check for continuity within the connector cable. If none, remedy or replace the cable.
	Broken exit motor gear.	Check visually and replace the exit motor if necessary.
	Defective exit motor.	Run maintenance item U030 and check if the exit motor operates when YC14-1,2,3,4 on the engine PCB go low. If not, replace the exit motor.
	Defective engine PCB.	Run maintenance item U030 and check if YC14-1,2,3,4 on the engine PCB go low. If not, replace the engine PCB.

Problem	Causes	Check procedures/corrective measures
(5) The scanner motor does not operate.	Broken scanner motor coil.	Check for continuity across the coil. If none, replace the scanner motor.
	Poor contact in the scanner motor connector terminals.	Reinsert the connector. Also check for continuity within the connector cable. If none, remedy or replace the cable.
(6) Cooling fan motor 1 does not operate.	Broken cooling fan motor 1 coil.	Check for continuity across the coil. If none, replace cooling fan motor 1.
	Poor contact in the cooling fan motor 1 connector terminals.	Reinsert the connector. Also check for continuity within the connector cable. If none, repair or replace the cable.
(7) Cooling fan motor 2 does not operate.	Broken cooling fan motor 2 coil.	Check for continuity across the coil. If none, replace cooling fan motor 2.
	Poor contact in the cooling fan motor 2 connector terminals.	Reinsert the connector. Also check for continuity within the connector cable. If none, repair or replace the cable.
(8) The paper feed clutch does not operate.	Broken paper feed clutch coil.	Check for continuity across the coil. If none, replace the paper feed clutch.
	Poor contact in the paper feed clutch connector terminals.	Reinsert the connector. Also check for continuity within the connector cable. If none, remedy or replace the cable.
	Defective engine PCB.	Run maintenance item U032 and check if YC8-3 on the engine PCB goes low. If not, replace the engine PCB.
(9) The bypass paper feed clutch does not operate.	Broken bypass paper feed clutch coil.	Check for continuity across the coil. If none, replace the bypass paper feed clutch.
	Poor contact in the bypass paper feed clutch connector terminals.	Reinsert the connector. Also check for continuity within the connector cable. If none, remedy or replace the cable.
	Defective engine PCB.	Run maintenance item U032 and check if YC8-5 on the engine PCB goes low. If not, replace the engine PCB.
(10) The cleaning lamp does not turn on.	Poor contact in the cleaning lamp connector terminals.	Reinsert the connector. Also check for continuity within the connector cable. If none, remedy or replace the cable.
	Defective cleaning lamp.	Check for continuity. If none, replace the cleaning lamp.
	Defective engine PCB.	If the cleaning lamp turns on when YC3-7,8 on the engine PCB is held low, replace the engine PCB.
(11) The exposure lamp does not turn on.	Poor contact in the exposure lamp connector terminals.	Reinsert the connector. Also check for continuity within the connector cable. If none, remedy or replace the cable.
	Defective inverter PCB.	Run maintenance item U061 and check if the exposure lamp turns on with YC1-1 and YC1-6 on the inverter PCB go low. If not, replace the inverter PCB.
	Defective engine PCB.	Run maintenance item U061 and check if YC17-1 and YC17-6 on the engine PCB goes low. If not, replace the engine PCB.

Problem	Causes	Check procedures/corrective measures
(12) The exposure lamp does not turn off.	Defective inverter PCB.	If the exposure lamp does not turn off with YC1-1 and YC1-6 on the inverter PCB high, replace the inverter PCB.
	Defective engine PCB.	If YC17-1 and YC17-6 on the engine PCB are always low, replace the engine PCB.
(13) The fixing heater does not turn on (C600).	Broken wire in fixing heater M or S.	Check for continuity across each heater. If none, replace the heater M or S.
	Fixing thermostat triggered.	Check for continuity across thermostat. If none, remove the cause and replace the thermostat.
(14) The fixing heater does not turn off.	Broken fixing thermistor wire.	Measure the resistance. If it is ∞ Ω, replace the fixing thermistor.
	Dirty sensor part of the fixing thermistor.	Check visually and clean the thermistor sensor parts.
(15) Main charging is not performed.	Broken main charger wire.	See page 1-5-21.
	Leaking main charger housing.	
	Poor contact in the high-voltage PCB connector terminals.	
	Defective engine PCB.	
	Defective high- voltage PCB.	
(16) Transfer charging is not performed.	Poor contact in the high-voltage PCB connector terminals.	See page 1-5-21.
	Defective engine PCB.	
	Defective high-voltage PCB.	
(17) No developing bias is output.	Poor contact in the high-voltage PCB connector terminals.	See page 1-5-21.
	Defective engine PCB.	
	Defective high-voltage PCB.	
(18) The original size is not detected.	Defective original detection switch.	If the level of YC18-5 on the engine PCB does not change when the original detection switch is turned on and off, replace the original detection switch.
(19) The original size is not detected correctly.	Original is not placed correctly.	Check the original and correct if necessary.
	Poor contact in the original size detection sensor connector terminals.	Reinsert the connector. Also check for continuity within the connector cable. If none, remedy or replace the cable.
	Defective original size detection sensor.	Check if sensor operates correctly. If not, replace it.

Problem	Causes	Check procedures/corrective measures
(20) The message requesting paper to be loaded is shown when paper is present in the drawer.	Poor contact in the paper switch connector terminals.	Reinsert the connector. Also check for continuity within the connector cable. If none, remedy or replace the cable.
	Defective paper switch.	If the level of YC8-2 on the engine PCB does not change when the paper switch is turned on and off, replace the paper switch.
(21) The size of paper in the drawer is not displayed correctly.	Poor contact in the paper length switch connector terminals.	Reinsert the connector. Also check for continuity within the connector cable. If none, remedy or replace the cable.
	Defective paper length switch.	Check if YC22-1,2,4 on the engine PCB goes low when the paper length switch is turned on. If not, replace the paper length switch.
(22) A paper jam in the paper feed, paper conveying or fixing section is indicated when the power switch is turned on.	A piece of paper torn from copy paper is caught around registration switch, exit switch or feedshift switch.	Check and remove if any.
	Defective registration switch.	Run maintenance item U031 and turn registration switch on and off manually. Replace registration switch if indication of the corresponding sensor is not light.
	Defective exit switch.	Run maintenance item U031 and turn exit switch on and off manually. Replace exit switch if indication of the corresponding sensor is not light.
	Defective feedshift switch.	Run maintenance item U031 and turn feedshift switch on and off manually. Replace feedshift switch if indication of the corresponding sensor is not light.
(23) The message requesting covers to be closed is displayed when the front cover and left cover are closed.	Poor contact in the connector terminals of safety switch.	Reinsert the connector. Also check for continuity within the connector cable. If none, remedy or replace the cable.
	Defective safety switch.	Check for continuity across each switch. If there is no continuity when the switch is on, replace it.
(24) Others.	Wiring is broken, shorted or makes poor contact.	Check for continuity. If none, repair.
	Noise.	Locate the source of noise and remove.

1-5-5 Mechanical problems

Problem	Causes/check procedures	Corrective measures
(1) No primary paper feed.	Check if the surfaces of the following rollers or pulleys are dirty with paper powder: forwarding pulley, paper feed pulley, separation pulley, registration rollers, bypass paper feed pulley and bypass separation pad.	Clean with isopropyl alcohol.
	Check if the forwarding pulley, paper feed pulley or separation pulley is deformed.	Check visually and replace any deformed pulleys (see page 1-6-3 and 5).
	Electrical problem with the following electromagnetic clutches: paper feed clutche and bypass paper feed clutch.	See pages 1-5-29.
(2) No secondary paper feed.	Check if the surfaces of the right and left registration rollers are dirty with paper powder.	Clean with isopropyl alcohol.
	Electrical problem with the registration motor.	See page 1-5-28.
(3) Skewed paper feed.	Width guide in a drawer installed incorrectly.	Check the width guide visually and correct or replace if necessary.
	Deformed width guide in a drawer.	Repair or replace if necessary .
	Check if a pressure spring along the paper conveying path is deformed or out of place.	Repair or replace.
(4) The scanner does not travel.	Check if the scanner wire is loose.	Reinstall the scanner wire (see page 1-6-18).
	The scanner motor malfunctions.	See page 1-5-29.
(5) Multiple sheets of paper are fed at one time.	Check if the separation pulley is worn.	Replace the separation pulley if it is worn (see page 1-6-3).
	Check if the paper is curled.	Change the paper.
(6) Paper jams.	Check if the paper is excessively curled.	Change the paper.
	Deformed guides along the paper conveying path.	Repair or replace if necessary.
	Check if the contact between the right and left registration rollers is correct.	Check visually and remedy if necessary.
	Check if the press roller is extremely dirty or deformed.	Clean or replace the press roller (see page 1-6-39).
	Check if the contact between the heat roller and its separation claws is correct.	Repair if any springs are off the separation claws.
	Check if the contact between the exit roller and pulley is correct.	Check visually and remedy if necessary.
(7) Toner drops on the paper conveying path.	Check if the developing unit is extremely dirty.	Clean the developing unit.
(8) Abnormal noise is heard.	Check if the pulleys, rollers and gears operate smoothly.	Grease the bearings and gears.
	Check if the following electromagnetic clutches are installed correctly: paper feed clutche and bypass paper feed clutch.	Correct.

1-6-1 Precautions for assembly and disassembly

(1) Precautions

- Be sure to turn the power switch off and disconnect the power plug before starting disassembly.
- When handling PCBs, do not touch connectors with bare hands or damage the board.
- Do not touch any PCB containing ICs with bare hands or any object prone to static charge.
- Use only the specified parts to replace the fixing unit thermostat. Never substitute electric wires, as the copier may be seriously damaged.
- Use the following testers when measuring voltages:
  Hioki 3200
  Sanwa MD-180C
  Sanwa YX-360TR
  Beckman TECH300
  Beckman DM45
  Beckman 330*
  Beckman 3030*
  Beckman DM850*
  Fluke 8060A*
  Arlec DMM1050
  Arlec YF1030C
  * Capable of measuring RMS values.
- Prepare the following as test originals:
  1. NTC (new test chart)
  2. NPTC (newspaper test chart)

(2) Running a maintenance item

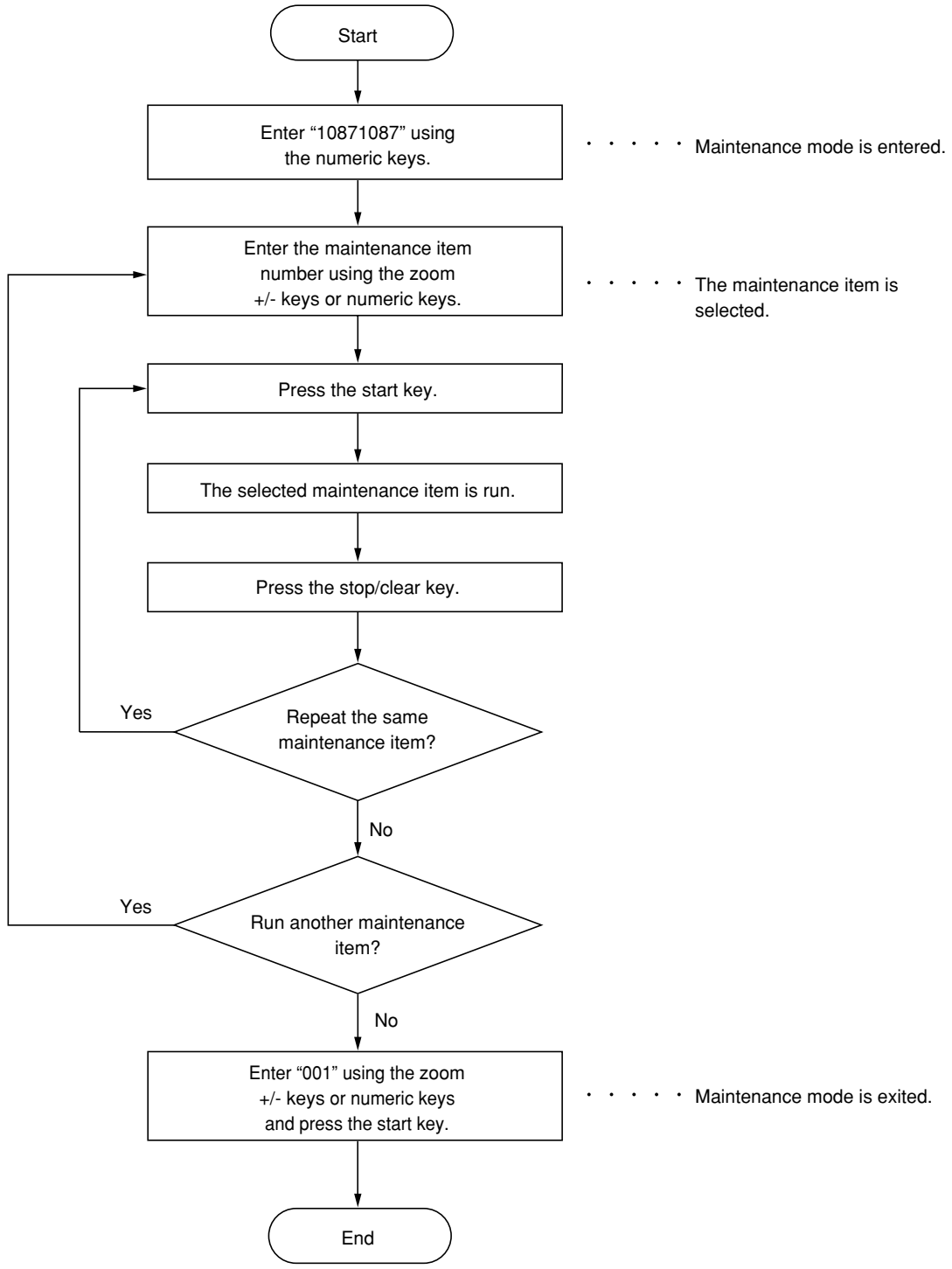

1-6-2 Paper feed section

(1) Detaching and refitting the separation pulley
Follow the procedure below to replace the separation pulley.

Procedure

1. Open the front cover and left cover. Remove the waste toner box.
2. Pull out the drawer.

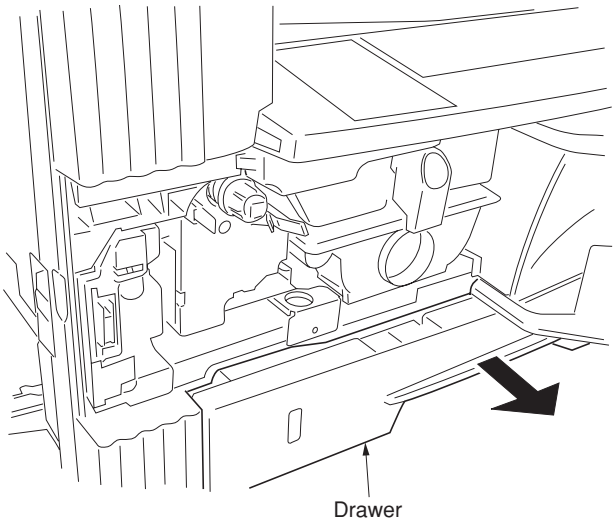

Figure 1-6-1

3. Remove the screw and then the front left lower cover.

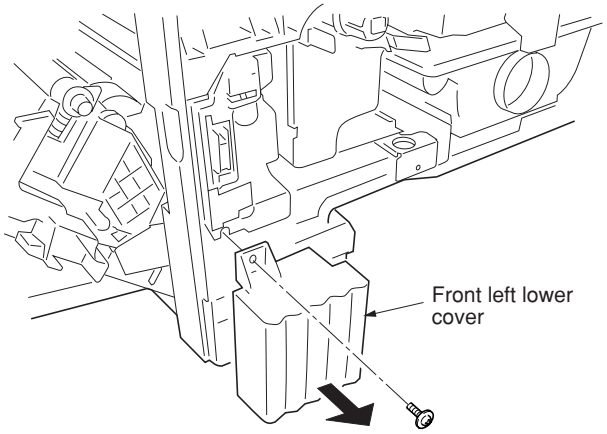

Figure 1-6-2

4. Remove the screw and then the lower paper feed unit.

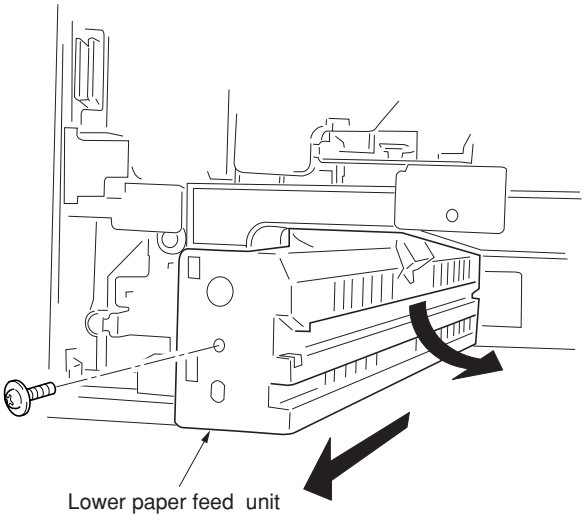

Figure 1-6-3

5. Remove the separation pulley unit from the lower paper feed unit.
6. Remove the separation pulley from the separation pulley unit.
7. Replace the separation pulley and refit all the removed parts.

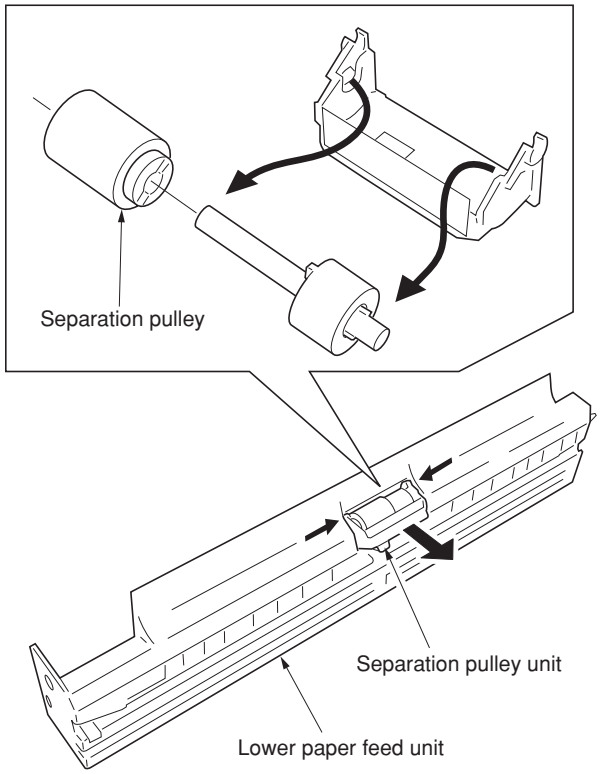

Figure 1-6-4

(2) Detaching and refitting the forwarding pulley and paper feed pulley
Follow the procedure below to replace the forwarding pulley and paper feed pulley.

Procedure

1. Remove the lower paper feed unit (see page 1-6-3).
2. Remove the drum unit (see page 1-6-33).
3. Remove the rear cover.
4. Remove the paper feed clutch, stop ring and bushing at the machine rear.

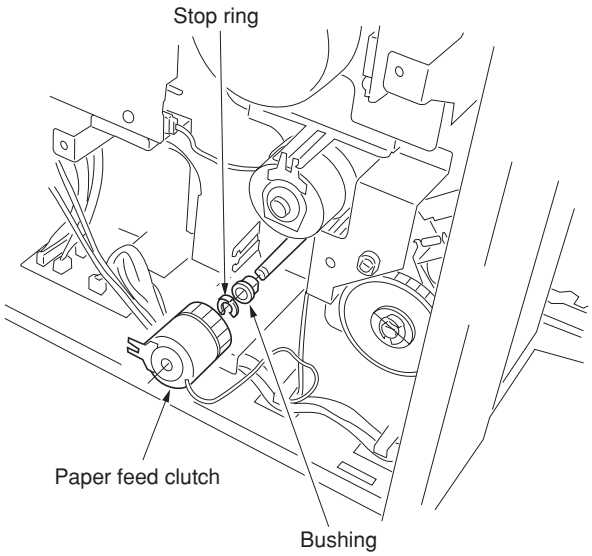

Figure 1-6-5

5. Remove the screw and then the registration guide.

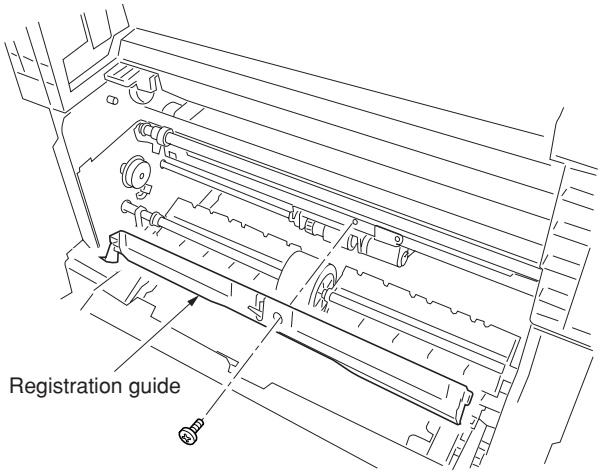

Figure 1-6-6

6. Remove the screw and then the upper paper feed unit.

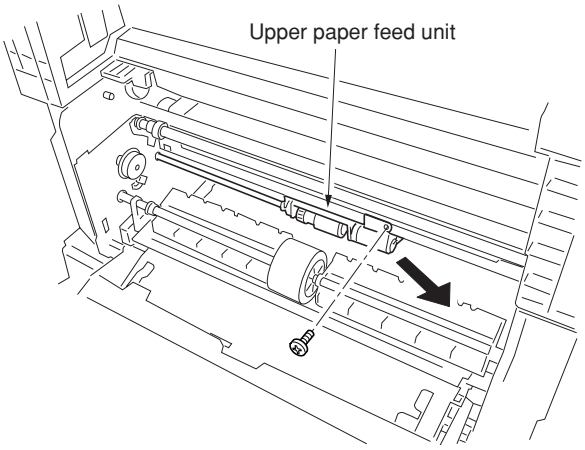

Figure 1-6-7

7. Remove the springs, stop ring and bushing and then the shaft holder from the upper paper feed unit.

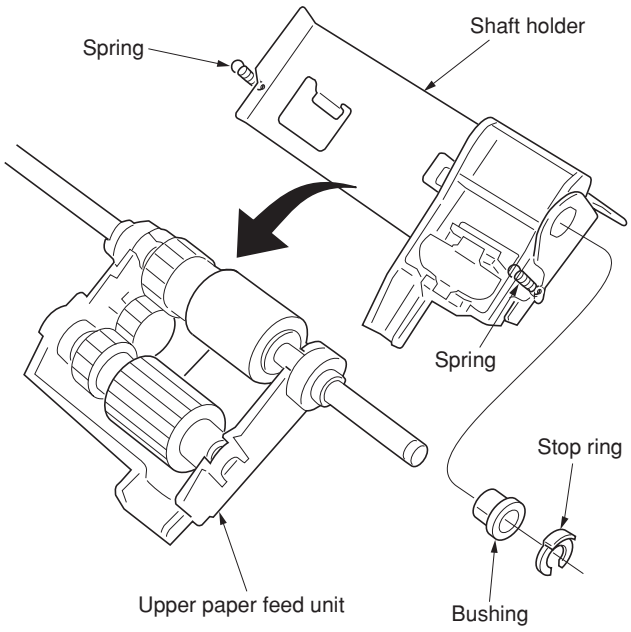

Figure 1-6-8

8. Remove the forwarding pulley from the upper paper feed unit.
9. Remove the paper feed pulley from the upper paper feed unit.
10. Replace the forwarding pulley and paper feed pulley and refit all the removed parts.

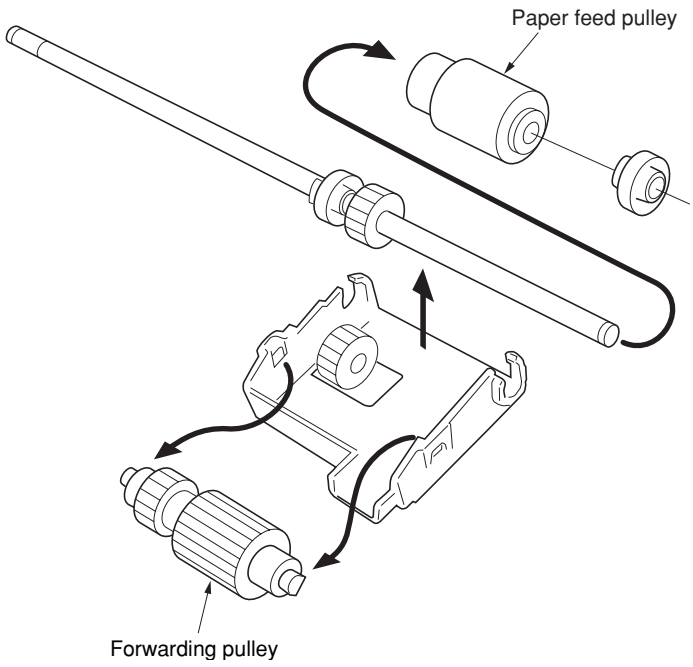

Figure 1-6-9

(3) Detaching and refitting the paper conveying unit
Follow the procedure below to maintenance of the paper feed section.

Procedure

1. Remove the drum unit (see page 1-6-33).
2. Remove the strap from the rear side. Restore the paper conveying unit. Remove the fitting projection and pin, and then remove the stopper from the front side.

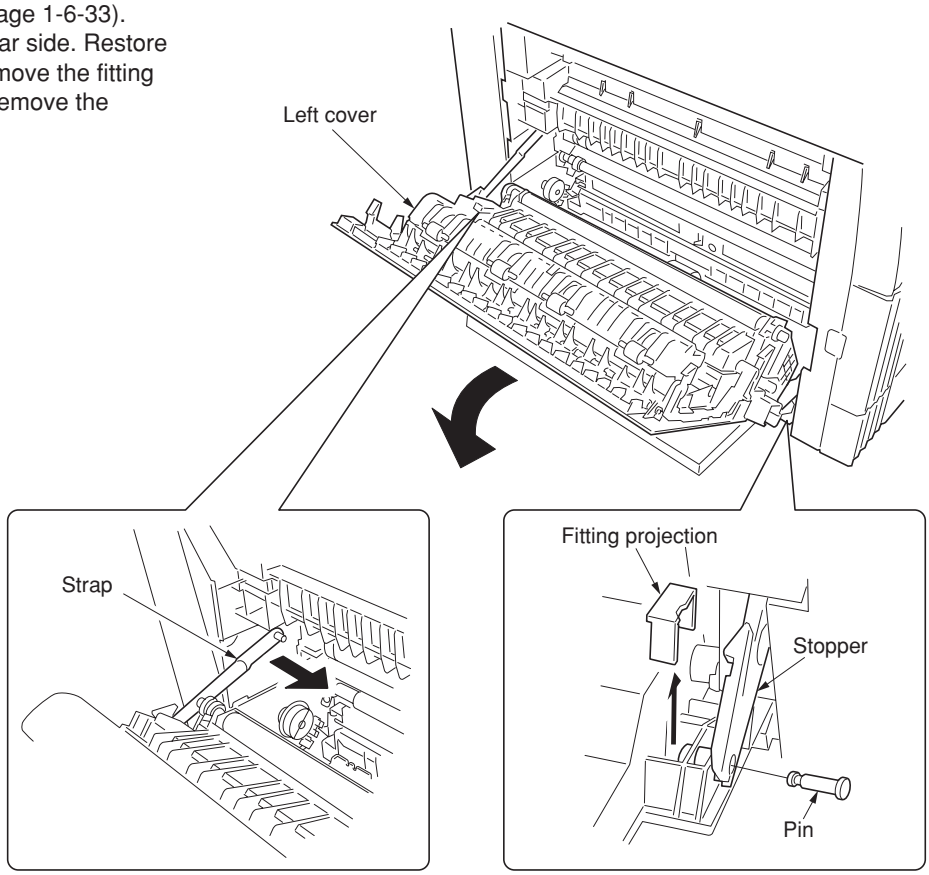

Figure 1-6-10

3. Open the left cover until it is put horizontally.
4. Push the fitting portions of the fixtures located on the front and rear and then remove the fixtures from the left cover.

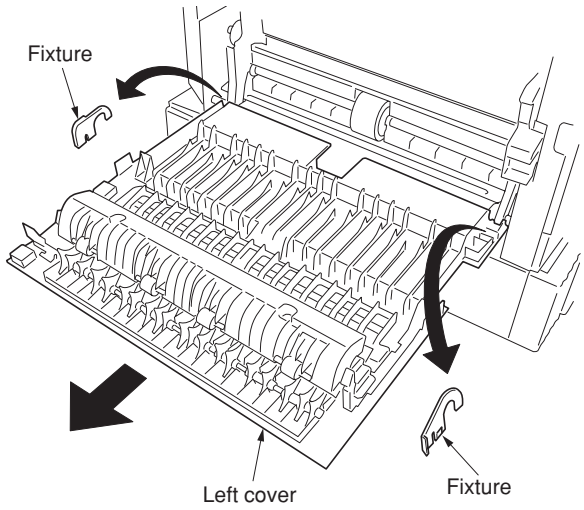

Figure 1-6-11

5. Remove the left cover from the copier.
6. Push the fitting portions of the bypass upper cover. Remove the bypass upper cover from

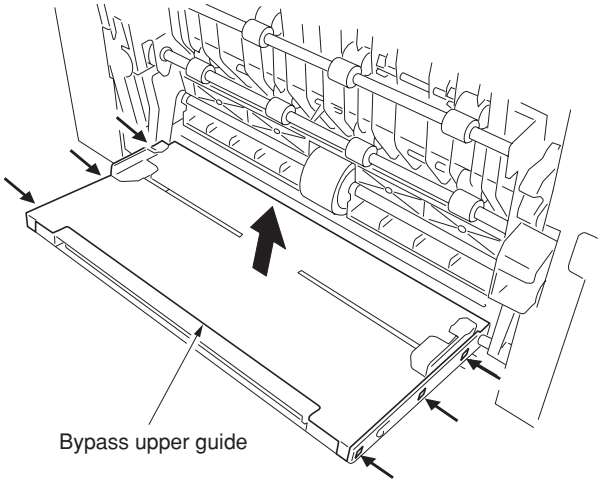

Figure 1-6-12

the bypass unit.
7. Detach the connector and remove the bypass

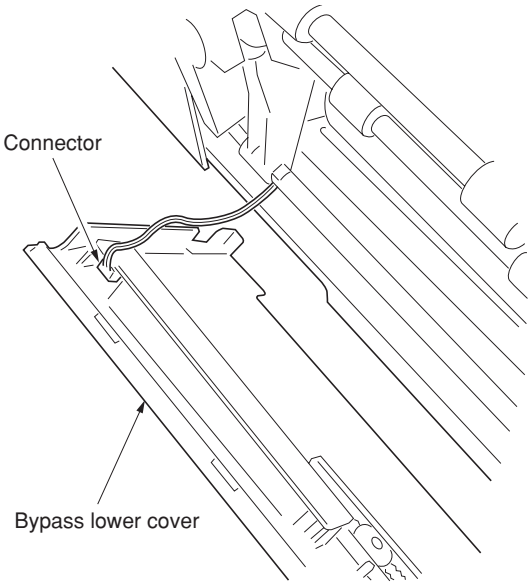

Figure 1-6-13

lower cover from the copier.
8. Remove the paper conveying unit from the copier.

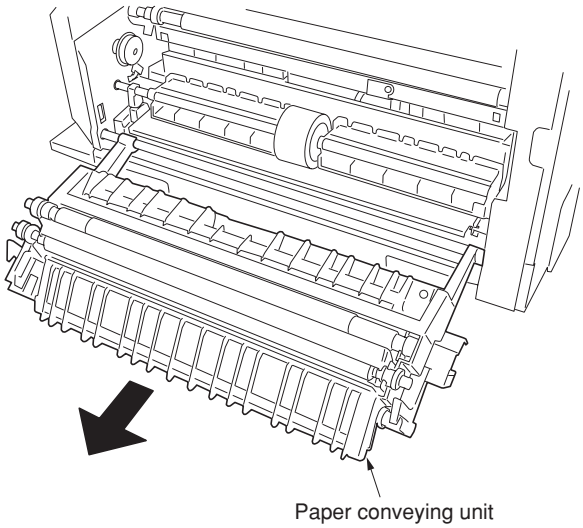

Figure 1-6-14

(4) Detaching and refitting the bypass paper feed pulley and bypass separation pad

Follow the procedure below to replace the bypass paper feed pulley and bypass separation pad.

Procedure

1. Open the front cover and remove the waste toner box. Pull out the drawer.
2. Remove the screw and then the front left lower cover.

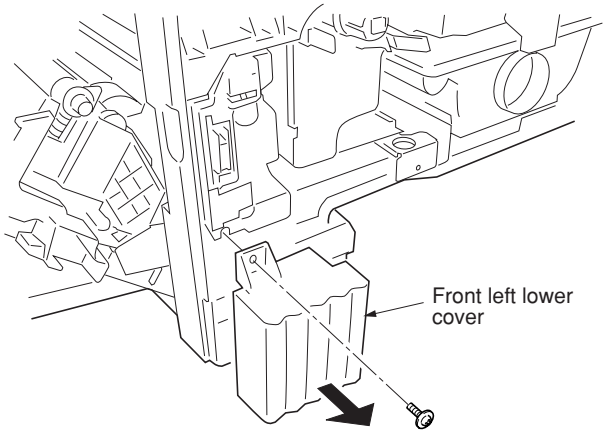

Figure 1-6-15

3. Remove the paper conveying unit (see page 1-6-7).
4. Remove the stop ring and bushing at the machine front side.

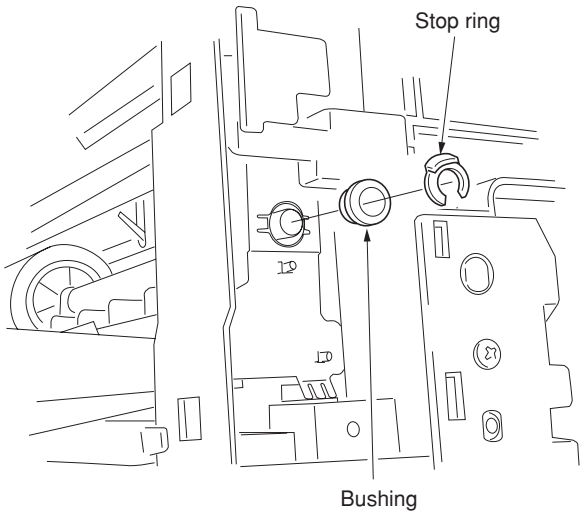

Figure 1-6-16

5. Remove the rear cover.
6. Remove the stop ring and bypass paper feed clutch gear at the machine rear side.

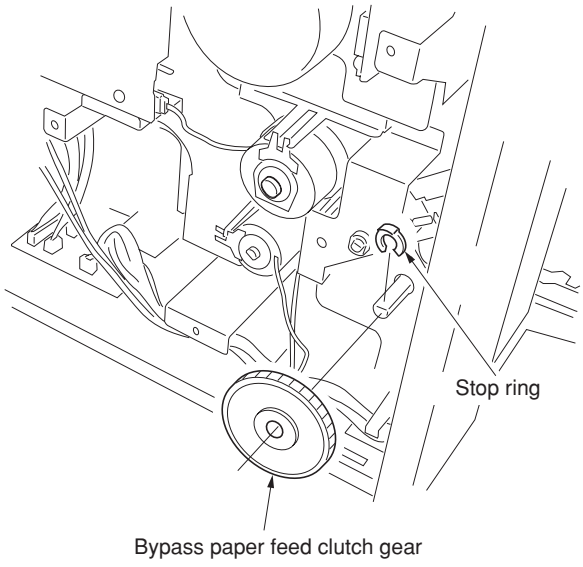

Figure 1-6-17

7. Temporarily push the bypass paper feed pulley unit into the rear side to unlock the front side and then remove it from the copier.

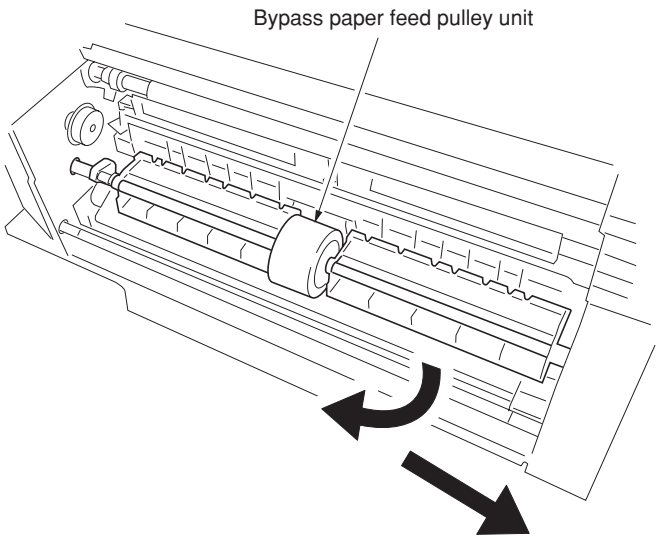

Figure 1-6-18

8. Remove the bypass paper feed pulley from the bypass paper feed pulley shaft.

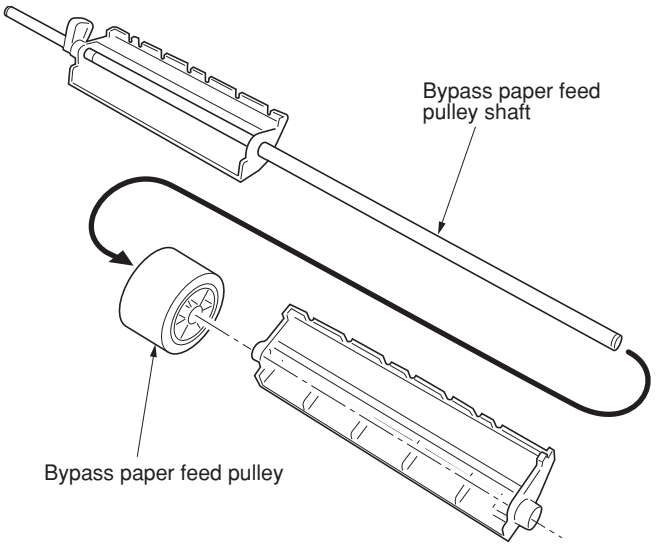

Figure 1-6-19

9. Push the fitting portions of the bypass separation pad. Remove the bypass separation pad from the copier.
10. Replace the bypass paper feed pulley and bypass separation pad and refit all the removed parts.

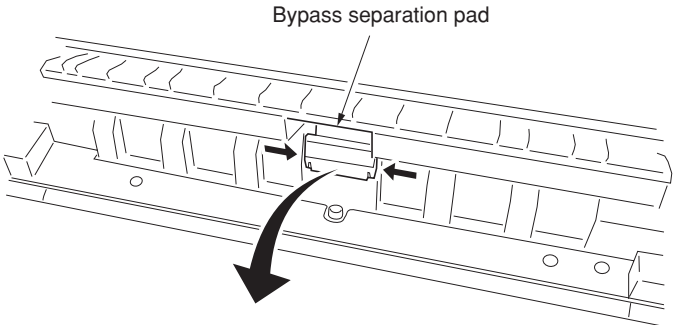

Figure 1-6-20

(5) Detaching and refitting the registration left roller

Follow the procedure below to replace the registration left roller.

Procedure

1. Remove the paper conveying unit (see page 1-6-7).
2. Remove the transfer roller (see page 1-6-37).
3. Release the stoppers at the front and rear side, and then remove the registration left roller from the paper conveying unit.
4. Replace the registration left roller and refit all the removed parts.

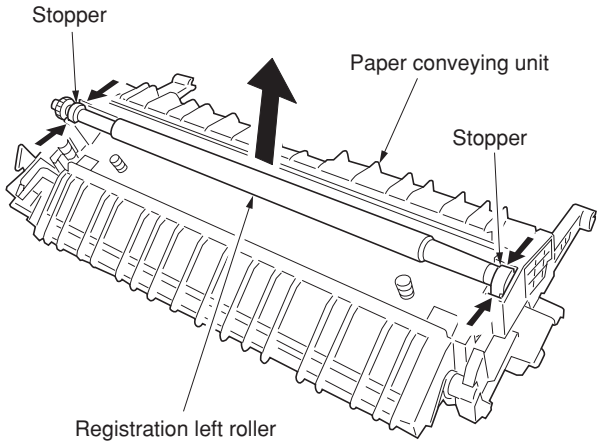

Figure 1-6-21

(6) Detaching and refitting the registration cleaner

Follow the procedure below to replace the registration cleaner.

Procedure

1. Remove the drum unit (see page 1-6-33).
2. Remove the screw and then the registration guide.

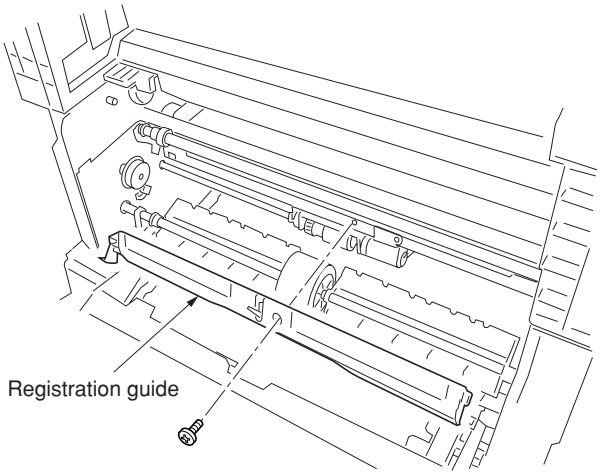

Figure 1-6-22

3. Remove the screw and then the registration cleaner.
4. Replace the registration cleaner and refit all the removed parts.

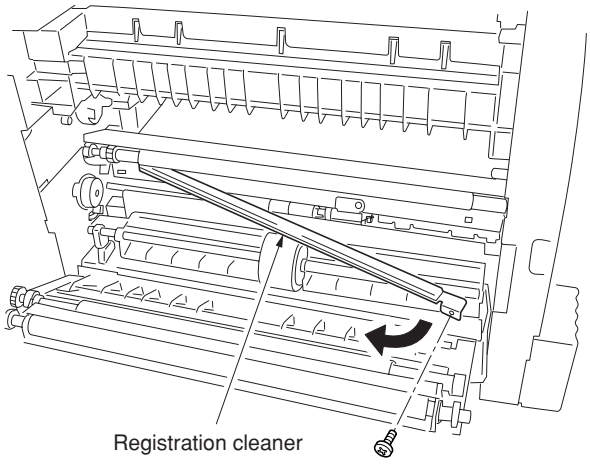

Figure 1-6-23

(7) Adjustment after roller and clutch replacement
Perform the following adjustment after refitting rollers and clutches.

(7-1) Adjusting the leading edge registration of image printing
Make the following adjustment if there is a regular error between the leading edges of the copy image and original.

U034 → U066 (P. 1-6-30) → U071 (P. 1-4-14)

Caution:
Check the copy image after the adjustment. If the image is still incorrect, perform the above adjustments in maintenance mode.

Procedure

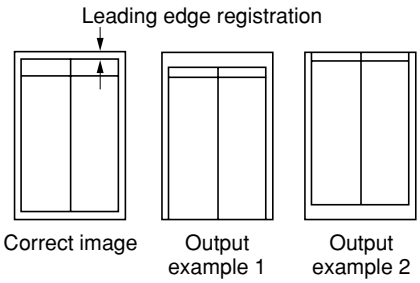

Figure 1-6-24

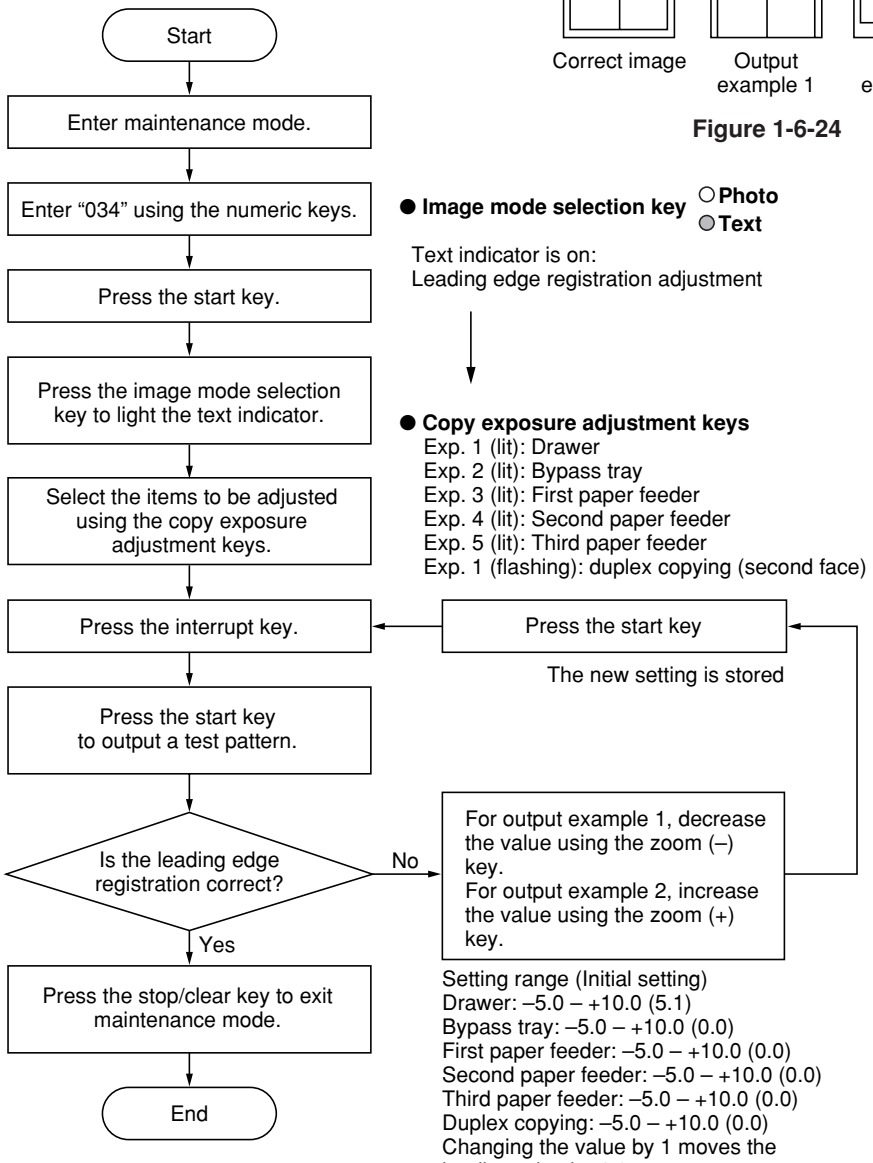

(7-2) Adjusting the leading edge registration for memory image printing

Make the following adjustment if there is a regular error between the leading edge of the copy image and the leading edge of the original during memory copying.

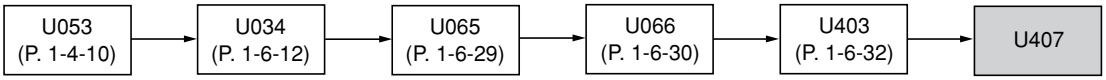

Caution:

Before making the following adjustment, ensure the above adjustments have been made in maintenance mode.

Procedure

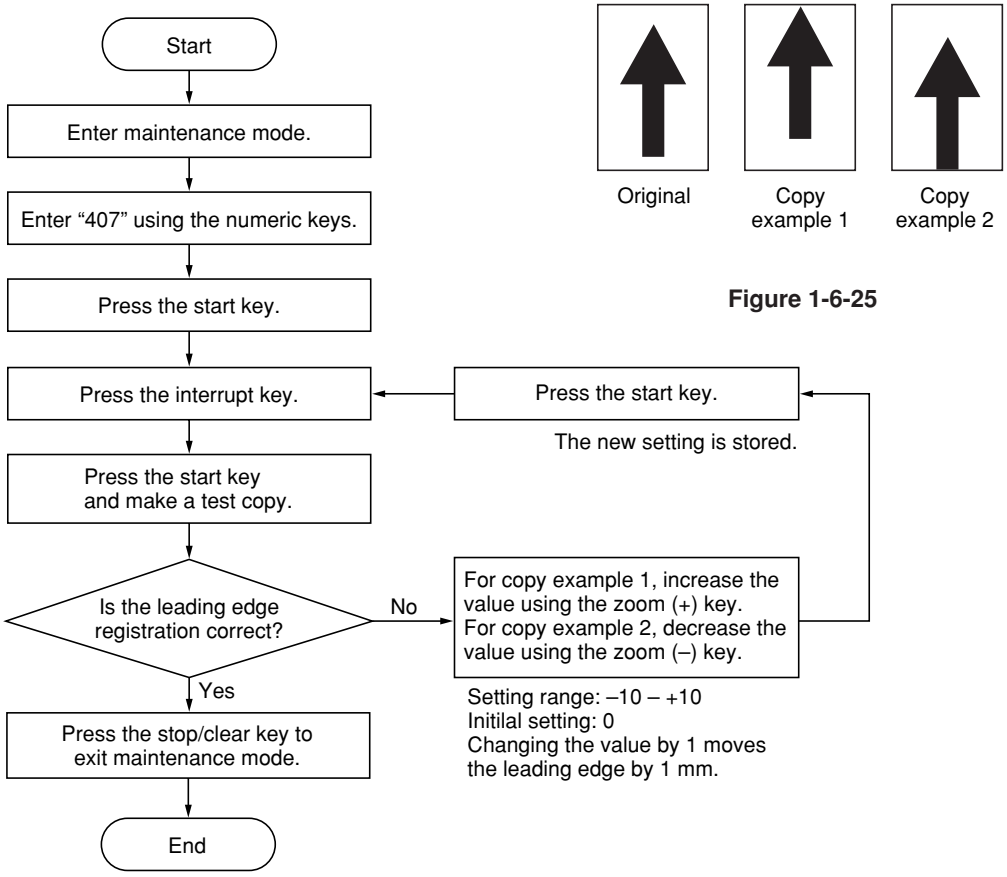

Figure 1-6-25

(7-3) Adjusting the center line of image printing

Make the following adjustment if there is a regular error between the center lines of the copy image and original when paper is fed from the drawer.

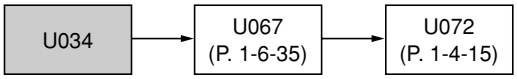

Caution:

Check the copy image after the adjustment. If the image is still incorrect, perform the above adjustments in maintenance mode.

Procedure

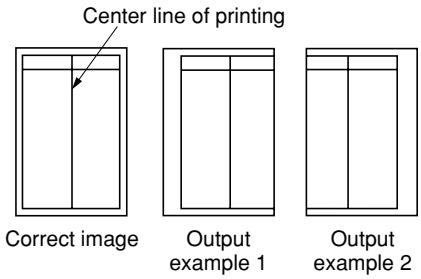

Figure 1-6-26

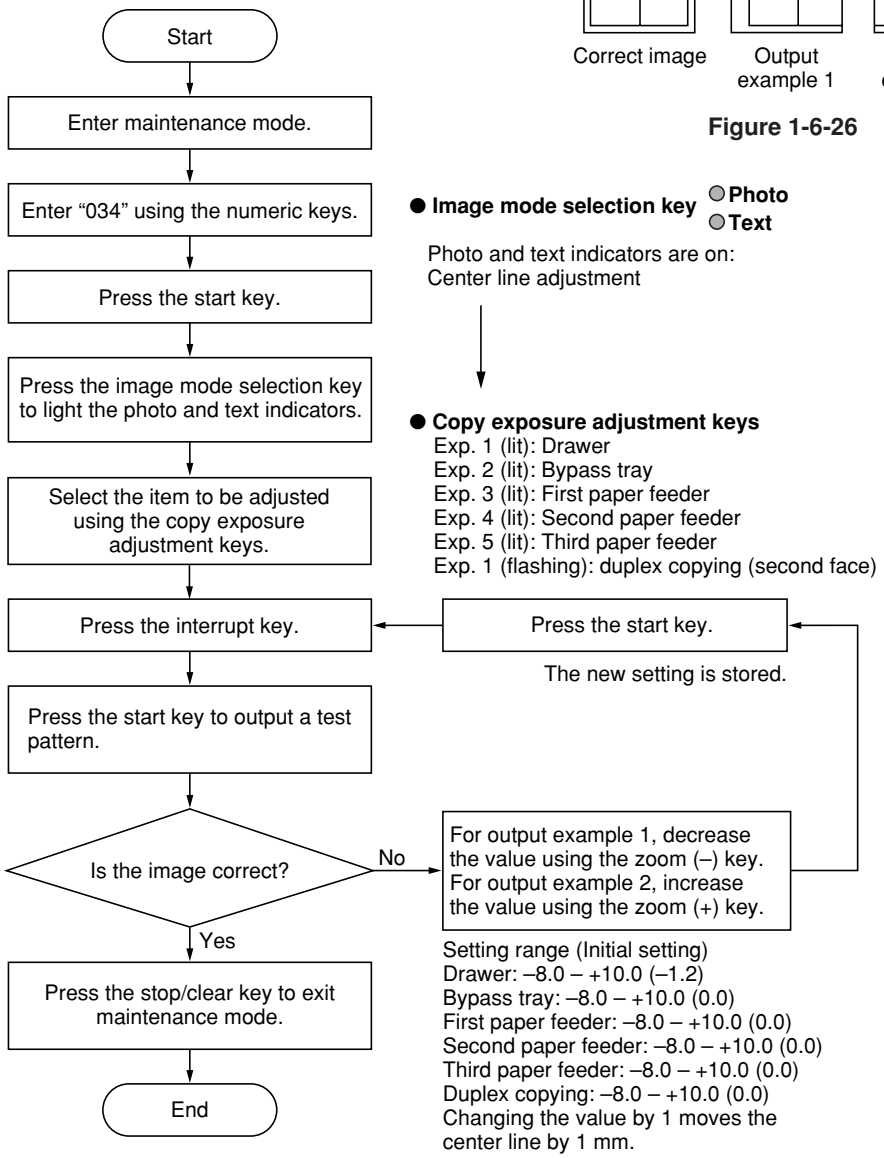

(7-4) Adjusting the margins for printing

Make the following adjustment if the margins are not correct.

U402 → U403 (P. 1-6-32) → U404 (P. 1-4-36)

Caution:

Check the copy image after the adjustment. If the margins are still incorrect, perform the above adjustments in maintenance mode.

Procedure

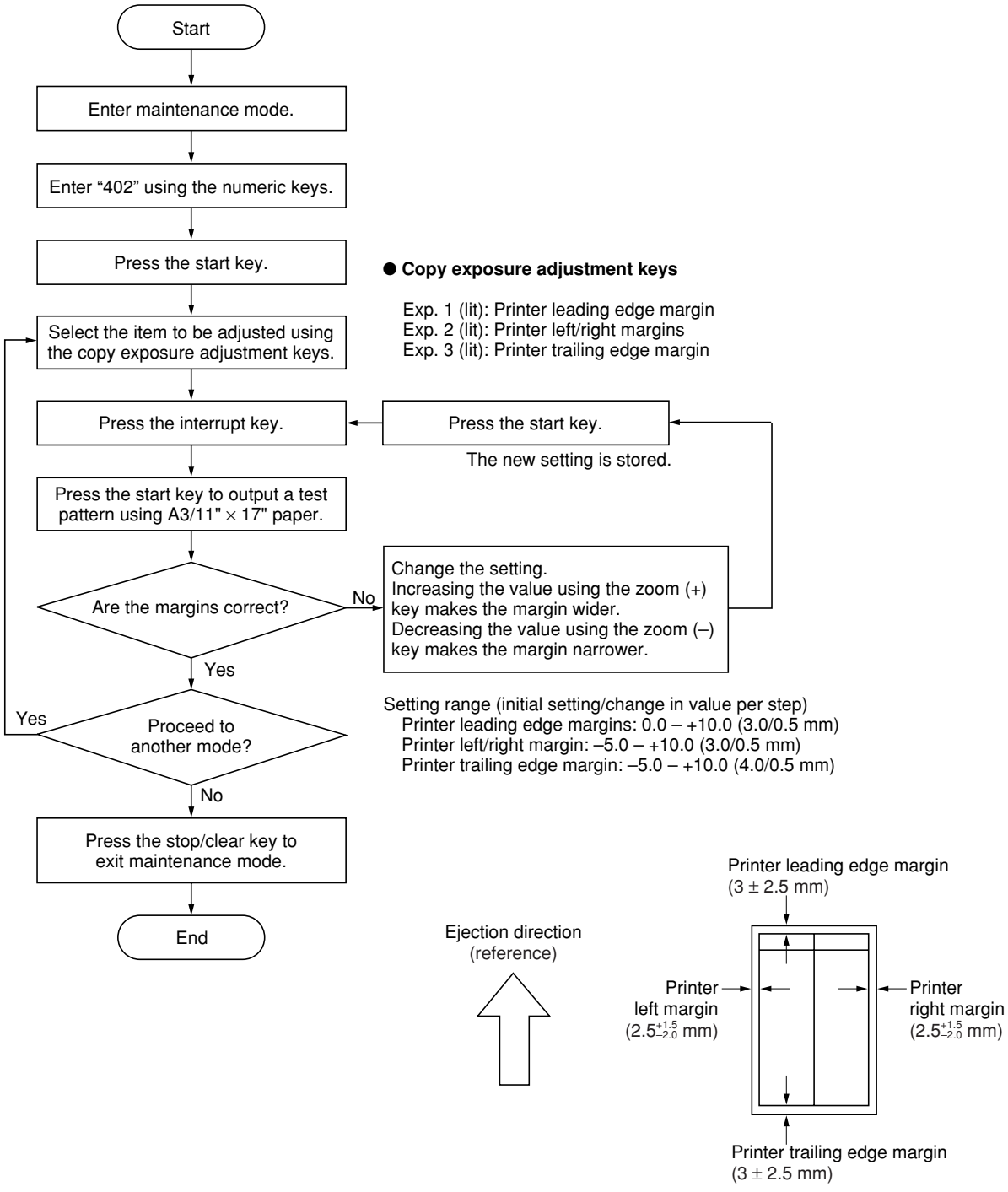

Figure 1-6-27

(7-5) Adjusting the amount of slack in the paper

Make the following adjustment if the leading edge of the copy image is missing or varies randomly, or if the copy paper is Z-folded.

Procedure

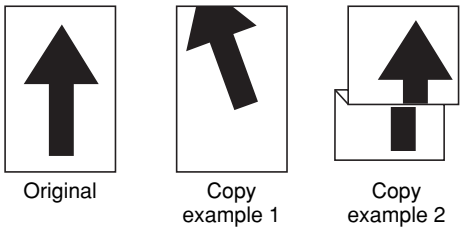

Figure 1-6-28

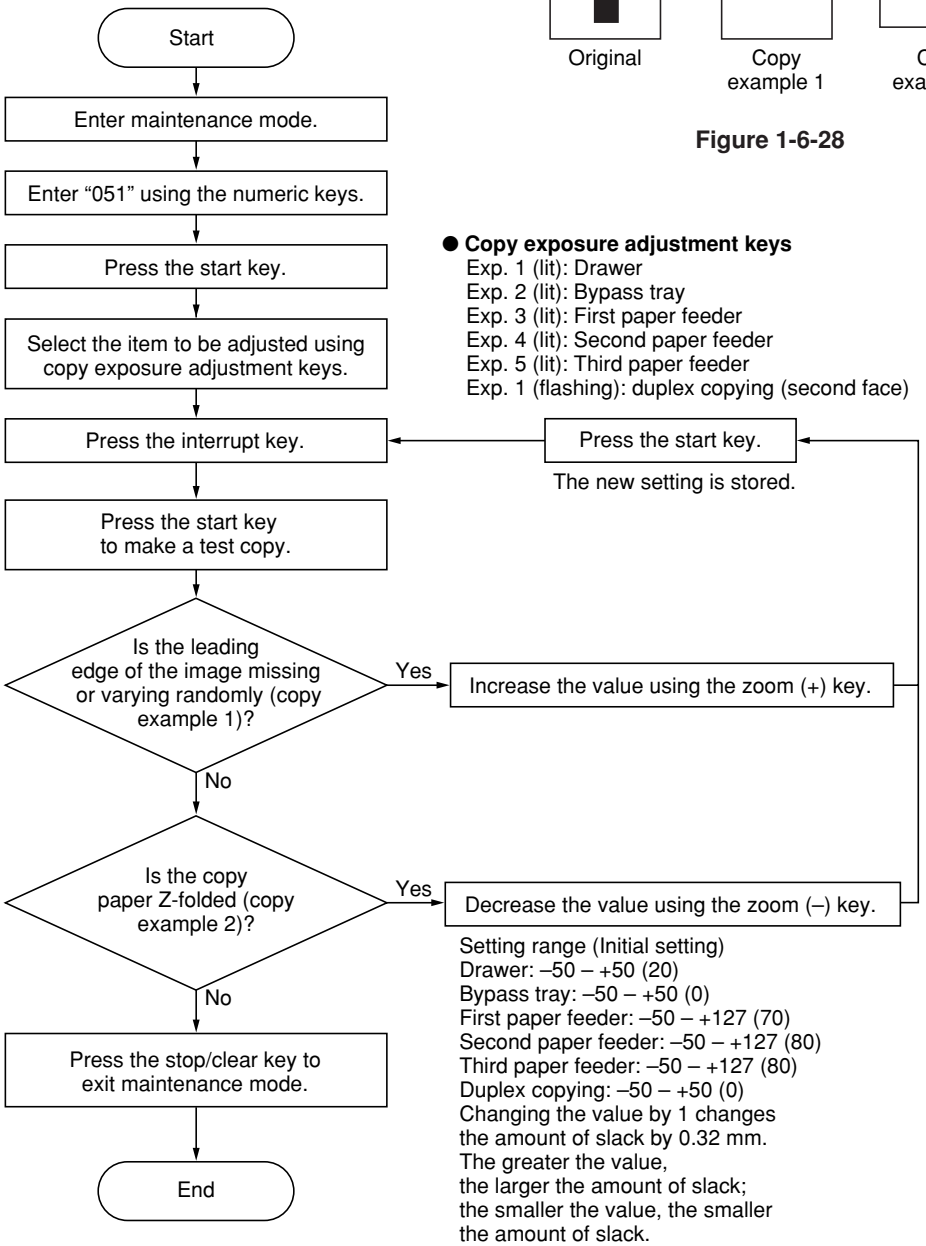

● **Copy exposure adjustment keys**
Exp. 1 (lit): Drawer
Exp. 2 (lit): Bypass tray
Exp. 3 (lit): First paper feeder
Exp. 4 (lit): Second paper feeder
Exp. 5 (lit): Third paper feeder
Exp. 1 (flashing): duplex copying (second face)

Setting range (Initial setting)
Drawer: –50 – +50 (20)
Bypass tray: –50 – +50 (0)
First paper feeder: –50 – +127 (70)
Second paper feeder: –50 – +127 (80)
Third paper feeder: –50 – +127 (80)
Duplex copying: –50 – +50 (0)
Changing the value by 1 changes the amount of slack by 0.32 mm.
The greater the value, the larger the amount of slack; the smaller the value, the smaller the amount of slack.

1-6-3 Optical section

(1) Detaching and refitting the exposure lamp

Take the following procedure when the exposure lamp is to be replaced.

Procedure

1. Remove the original cover or the DP.
2. Remove the two screws holding the upper right cover and then the cover. Remove the contact glass.

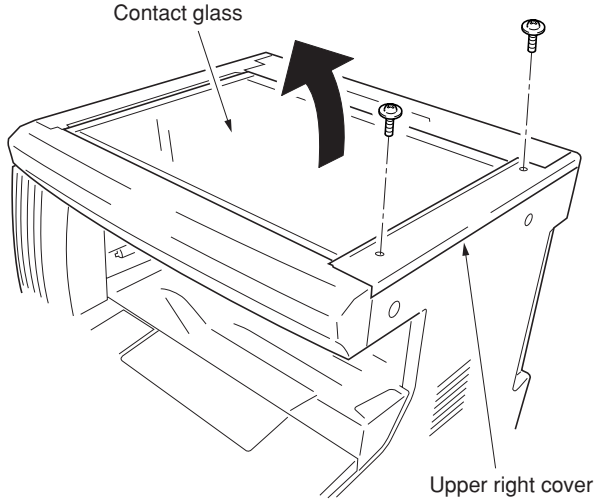

Figure 1-6-29

3. Move the mirror 1 frame to the cutouts of the machine.
   * When moving the mirror 1 frame, do not touch the exposure lamp nor the inverter PCB.
4. Detach the exposure lamp connector from the inverter PCB and release the wire from three clamps.

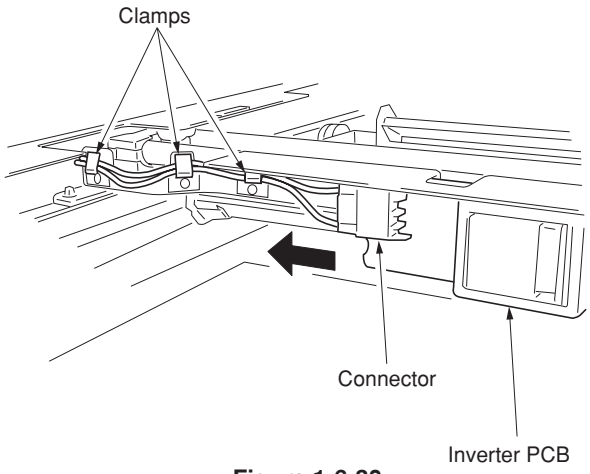

Figure 1-6-30

5. Remove the two screws holding the exposure lamp and then the lamp.
6. Replace the exposure lamp and refit all the removed parts.

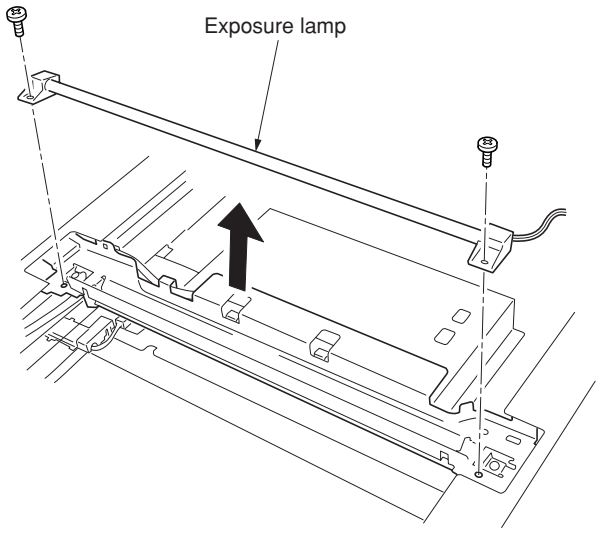

Figure 1-6-31

(2) Detaching and refitting the scanner wires

Take the following procedure when the scanner wires are broken or to be replaced.

(2-1) Detaching the scanner wires

Procedure

1. Remove the exposure lamp (see page 1-6-17).
2. Remove the two screws holding the upper rear cover and then the cover. Remove the two screws holding the middle left cover and upper left cover and then the covers.

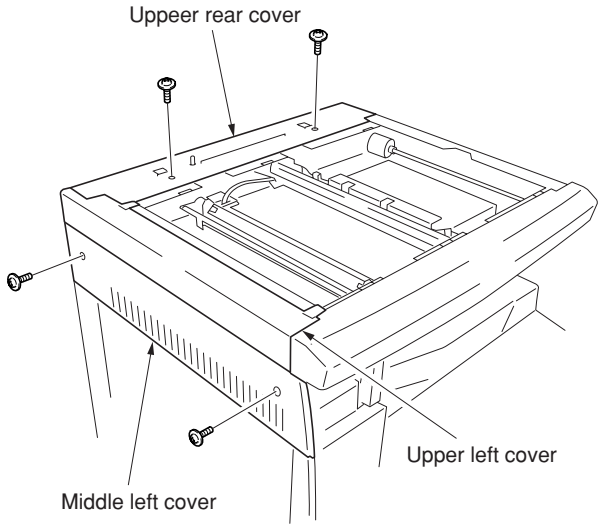

Figure 1-6-32

3. Remove the screw and then the slit retainer and slit glass. Detach the fitting portions and then remove the front scanner cover.

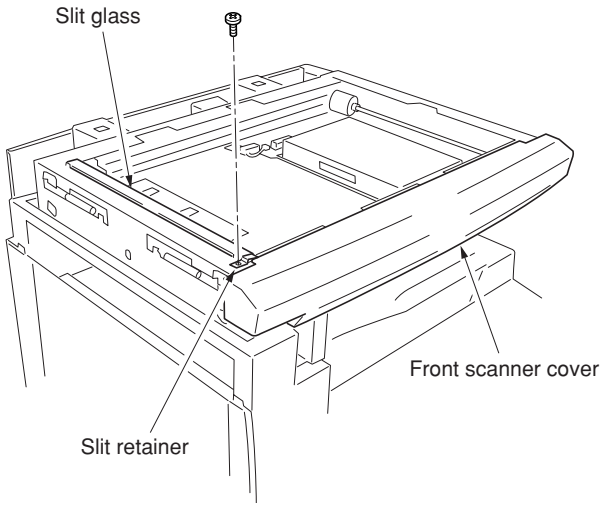

Figure 1-6-33

4. Remove the inverter wire guide and then detach the inverter wire from the inverter PCB.

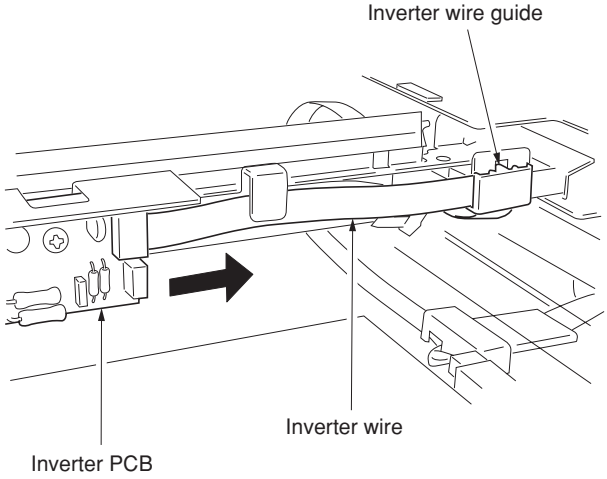

Figure 1-6-34

5. Remove the screw holding each of the front and rear wire retainers and then remove the mirror 1 frame from the scanner unit.

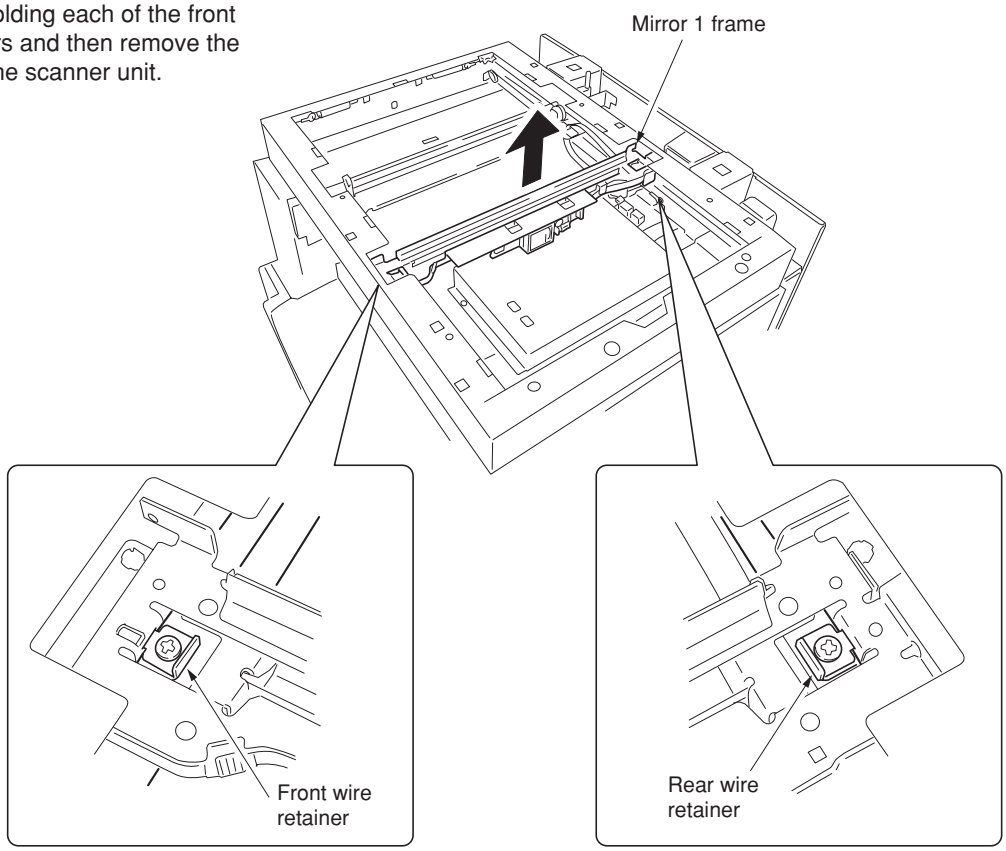

Figure 1-6-35

6. Unhook the round terminal of the scanner wire from the scanner tension spring on the left side of the scanner unit.
7. Remove the scanner wire.

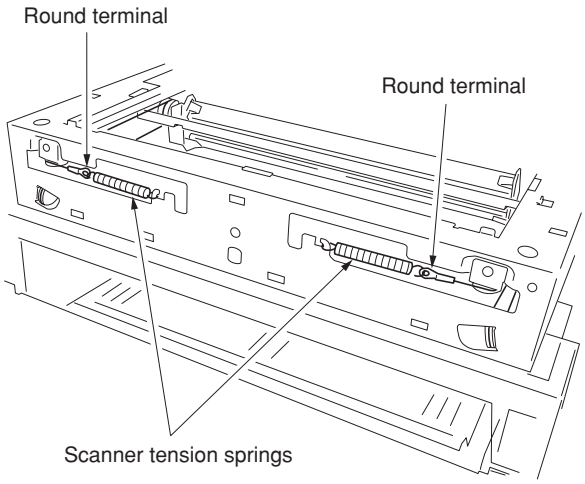

Figure 1-6-36

(2-2) Fitting the scanner wires

Caution:
When fitting the wires, be sure to use those specified below.
Machine front: P/N 2C91236 (gray)
Machine rear: P/N 2C91235 (black)

Fitting requires the following tools:
Two frame securing tools (P/N 2AV6808)
Two scanner wire stoppers (P/N 3596811)

Procedure

1. Remove the screw and then scanner wire drum gear at the machine rear side.

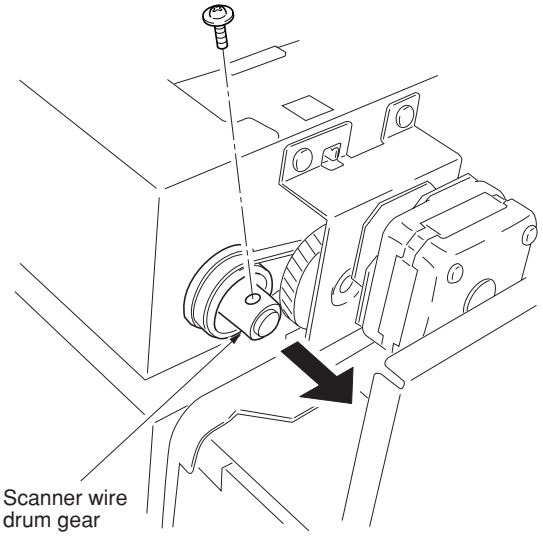

Figure 1-6-37

2. Remove the stop ring and bushing from the front of the scanner wire drum shaft.
3. Remove the scanner wire drum shaft from the scanner unit.

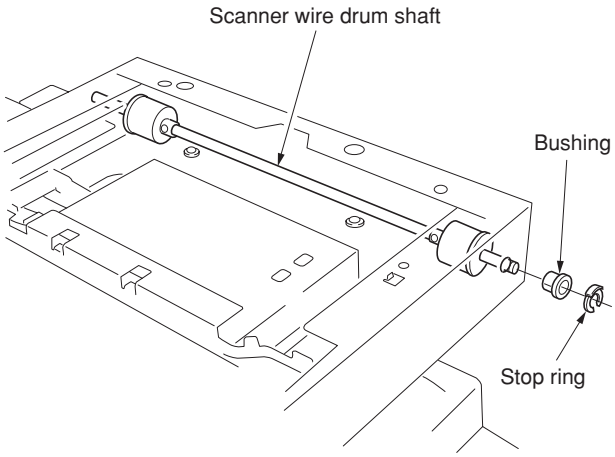

Figure 1-6-38

4. Insert the locating ball on each of the scanner wires into the hole in the respective scanner wire drum and wind the scanner wire three turns inward and four turns outward.
   • With the locating ball as the reference point, wind the shorter end of each of the wires outward.
5. Secure the scanner wires using the scanner wire stoppers.

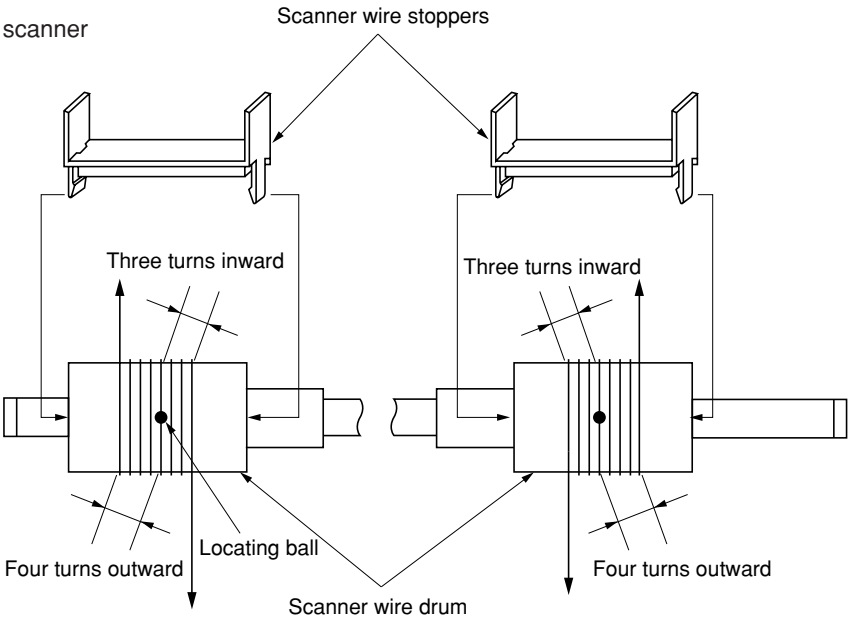

Figure 1-6-39

6. Refit the scanner wire drum shaft to the scanner unit.
7. Insert the two frame securing tools into the positioning holes at the front and rear of the scanner unit to pin the mirror 2 frame in position.

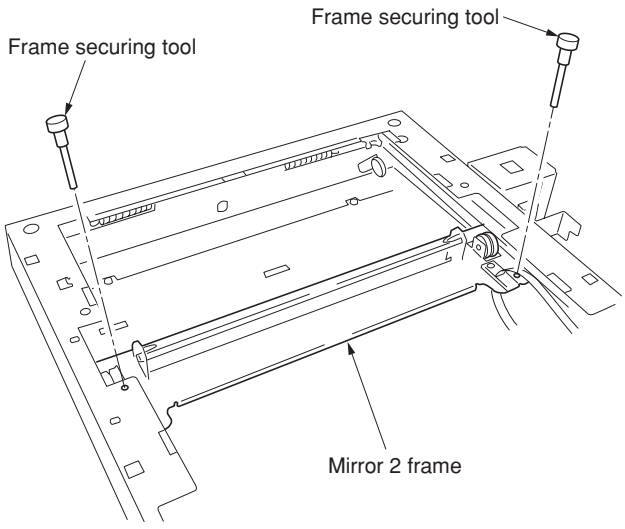

Figure 1-6-40

8. Loop the outer ends of the scanner wires around the outer grooves in the pulleys on the mirror 2 frame, winding from below to above. ..... ①
9. Hook the round terminals onto the catches inside the scanner unit. ..... ②
10. Loop the inner ends of the scanner wires around the grooves in the pulleys at the left of the scanner unit, winding from below to above. ..... ③
11. Loop the scanner wires around the inner grooves in the pulleys on the mirror 2 frame, winding from above to below. ..... ④
12. Wind the scanner wires around the grooves in the scanner wire guides at the left of the scanner unit. ..... ⑤
13. Hook the round terminals onto the scanner tension springs. ..... ⑥

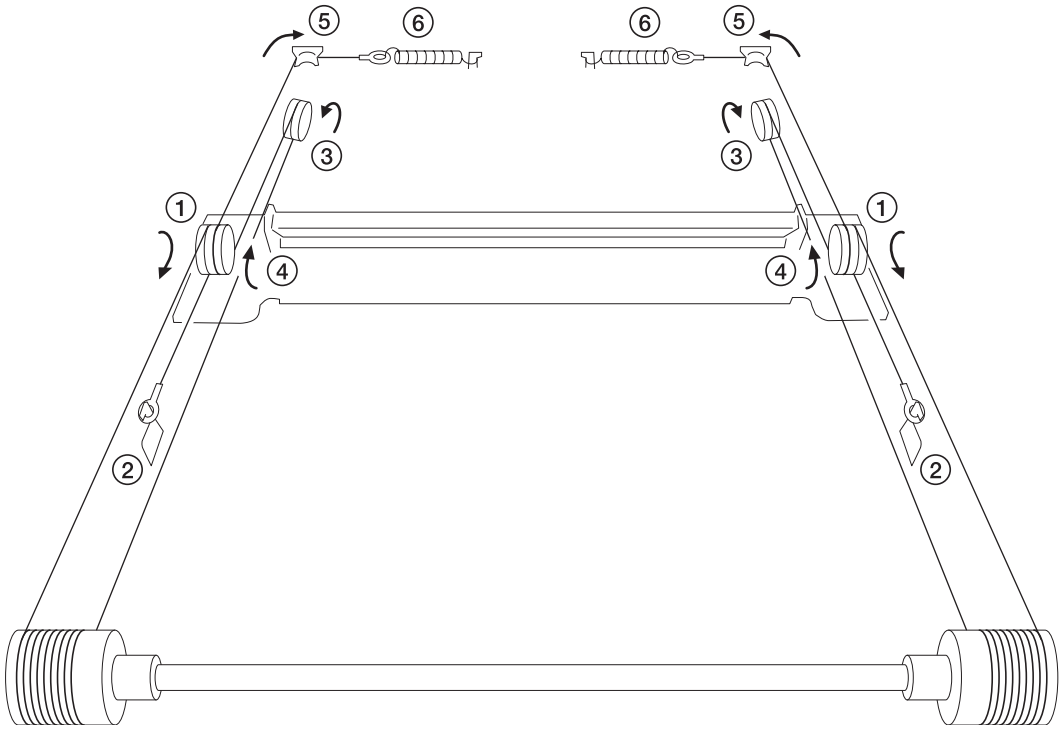

Figure 1-6-41

14. Remove the scanner wire stoppers and frame securing tools.
15. Gather the scanner wires toward the locating balls.
16. Move the mirror 2 frame from side to side to correctly locate the wires in position.
17. Put the mirror 1 frame on the scanner rail and move it toward the left side of the machine.
18. Insert the frame securing tools into the positioning holes (leftmost holes) at the front and the rear of the scanner unit and screw the mirror 1 frame while securing both the mirror 1 frame and the mirror 2 frame.
19. Remove the two frame securing tools.
20. Refit all the removed parts.

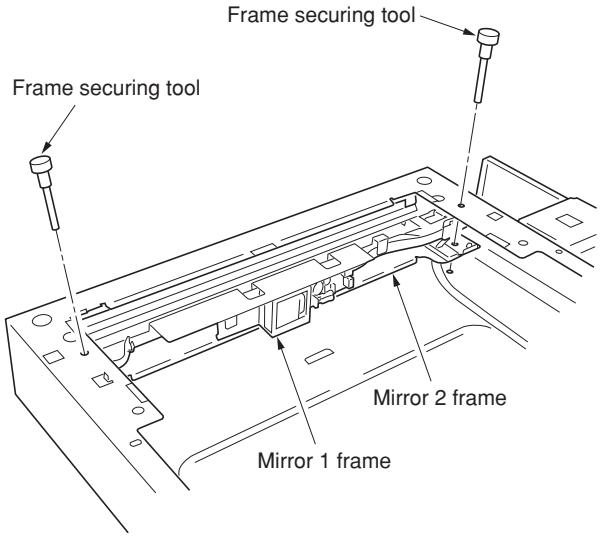

Figure 1-6-42

(3) Detaching and refitting the ISU (reference)
Take the following procedure when the ISU is to be replaced.

Procedure
• Detaching the ISU
1. Remove the contact glass (see page 1-6-17).
2. Remove the four screws holding the ISU cover and then the cover.

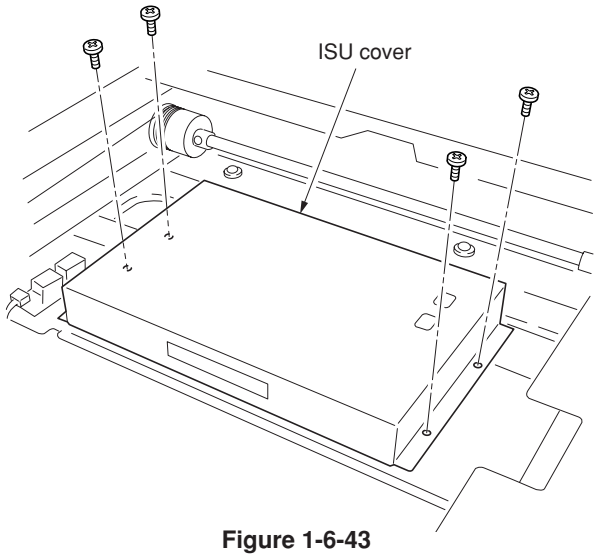

Figure 1-6-43

3. Detach the CCD wire from the CCD PCB.
4. Remove the four screws holding the ISU and then the ISU.
5. Replace the ISU.

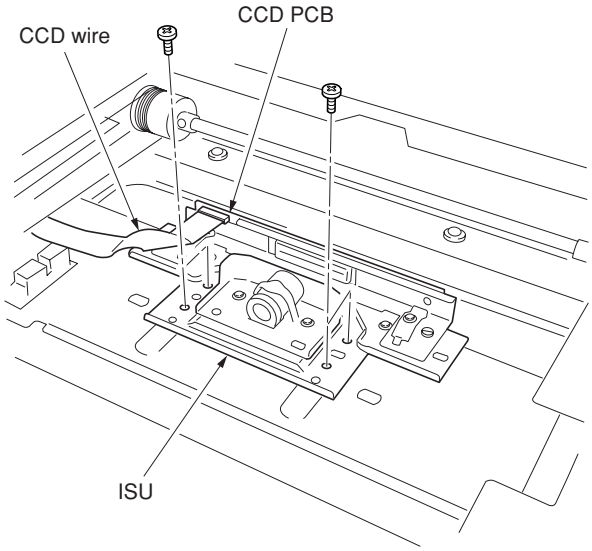

Figure 1-6-44

• Refitting the ISU
1. Align the positioning holes of the ISU by pushing it a little and attach the ISU to the scanner unit.
   * Attach the ISU with reference to marking "C".
2. Secure the ISU using the four screws.
3. Refit the CCD wire to CCD PCB.
4. Refit all the removed parts.

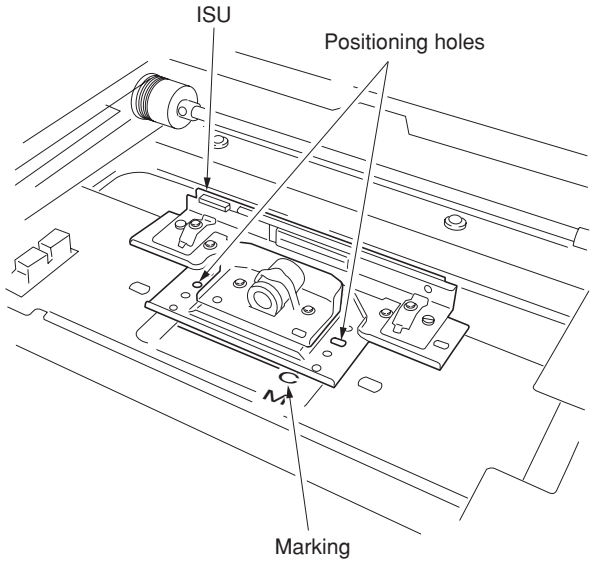

Figure 1-6-45

(4) Detaching and refitting the laser scanner unit

Take the following procedure when the laser scanner unit is to be replaced.

Procedure

1. Remove the original cover or the DP.
2. Remove the upper right cover, contact glass, upper rear cover, middle left cover, upper left cover, slit glass and front scanner cover (see page 1-6-18).
3. Remove the four screws holding the right cover and then the cover. Remove the ten screws holding the rear cover and then the cover.

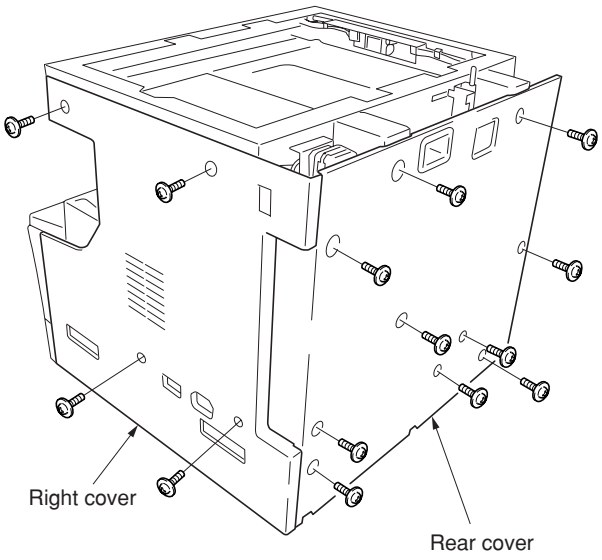

Figure 1-6-46

4. Detach the connector YC8 on the main PCB. Detach the connectors YC16, YC17,YC18 and YC19 on the engine PCB.

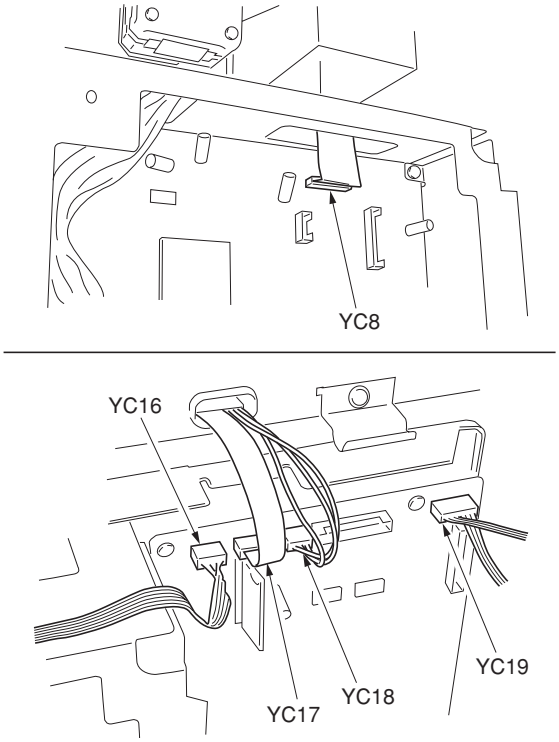

Figure 1-6-47

5. Remove the four pins holding the scanner unit and then the unit.

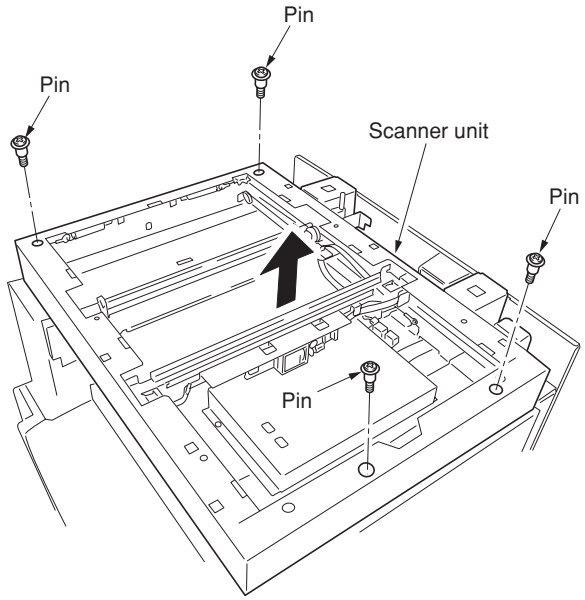

Figure 1-6-48

6. Remove the screw holding the exit cover and then the cover. Remove the two screws holding the inner rear cover and then the cover.

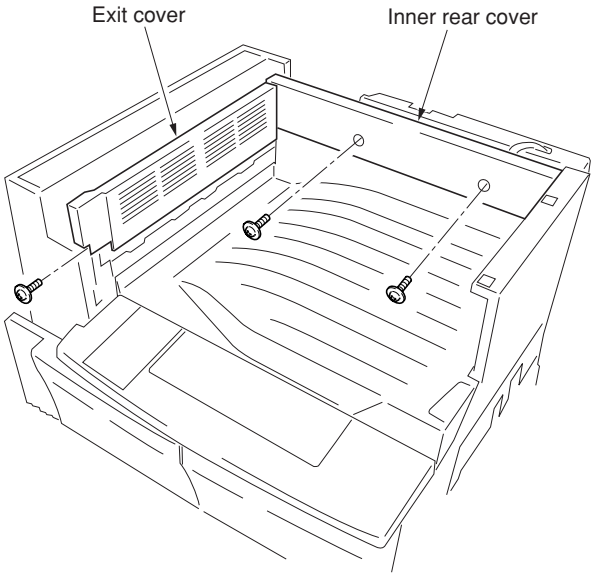

Figure 1-6-49

7. Remove the front and rear left cover.

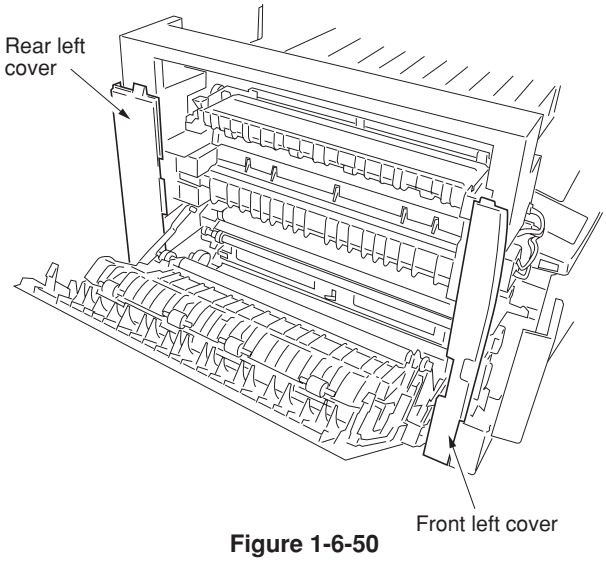

Figure 1-6-50

8. Remove the two screws holding the exit unit and then pull out the unit a little.

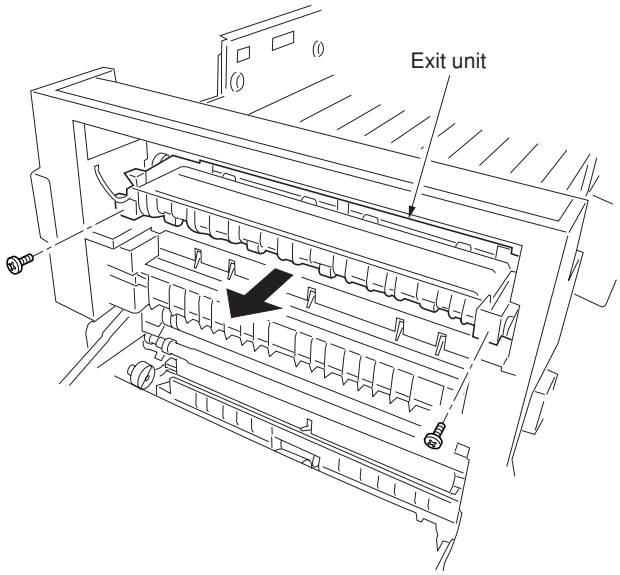

Figure 1-6-51

9. Remove the exit tray.

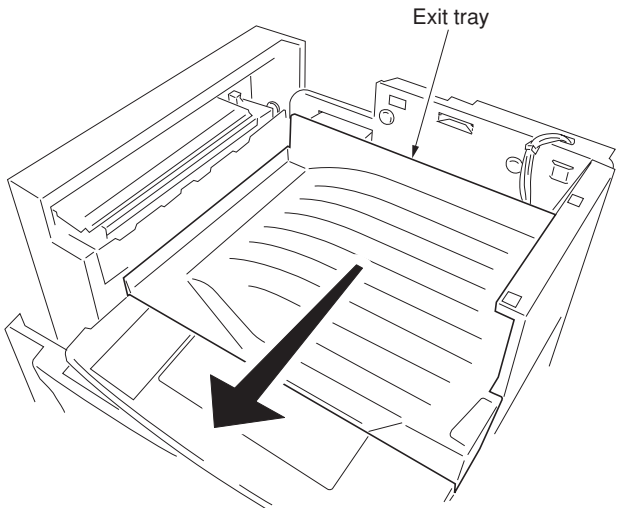

Figure 1-6-52

10. Remove the four screws and detach the two connector and then remove the laser scanner unit.
11. Replace the laser scanner unit and refit all the removed parts.

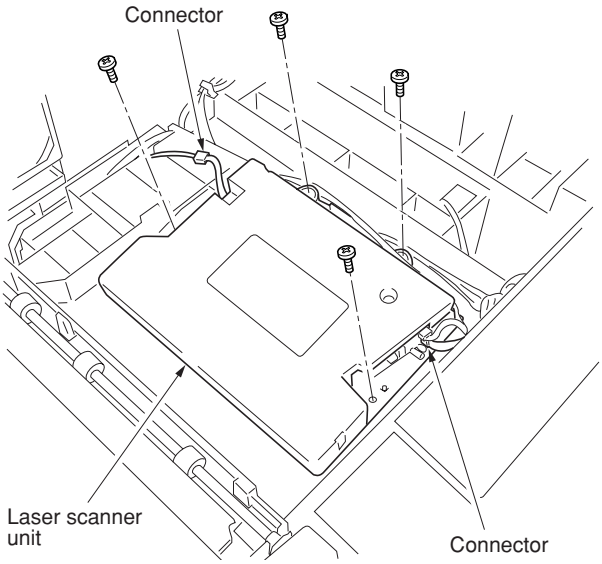

Figure 1-6-53

(5) Adjusting the longitudinal squareness (reference)

Perform the following adjustment if the copy image is longitudinally skewed (longitudinal squareness not obtained).

Caution:

- Adjust the amount of slack in the paper (page 1-6-16) first. Check for the longitudinal squareness of the copy image, and if it is not obtained, perform the longitudinal squareness adjustment.
- Before making the following adjustment, output a VTC-PG2 pattern in maintenance item U993 to use as the original for the adjustment.

Procedure

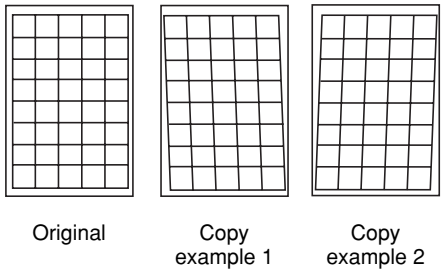

Figure 1-6-54

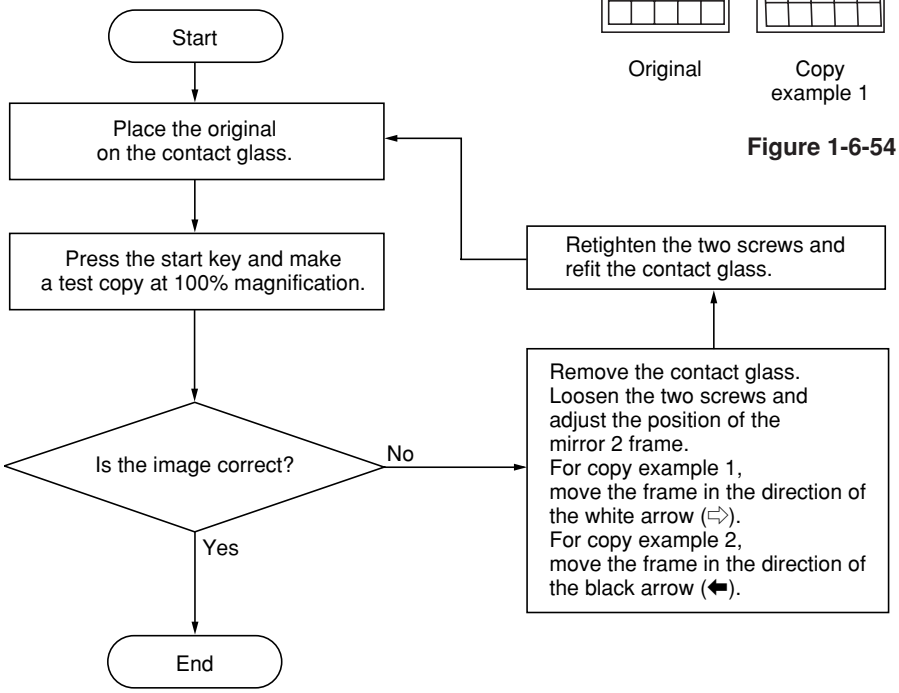

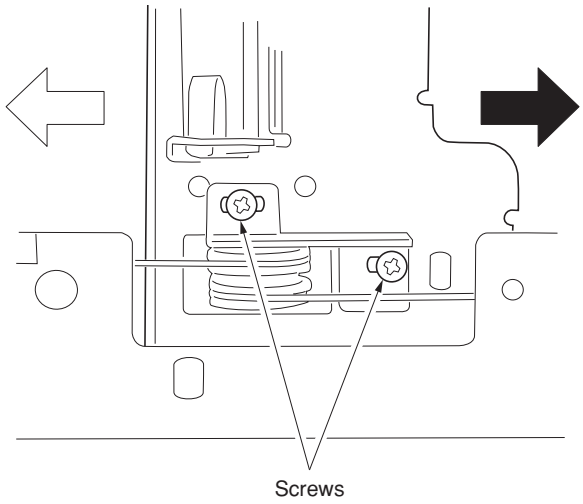

Figure 1-6-55

(6) Adjusting magnification of the scanner in the main scanning direction

Perform the following adjustment if the magnification in the main scanning direction is not correct.

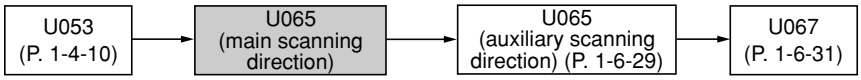

Caution:

Before making the following adjustment, ensure that the above adjustments have been made in maintenance mode. Also, perform "(7) Adjusting magnification of the scanner in the auxiliary scanning direction" (page 1-6-29) and "(9) Adjusting the scanner center line" (page 1-6-31) after this adjustment.

Procedure

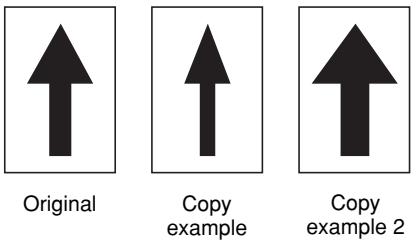

Figure 1-6-56

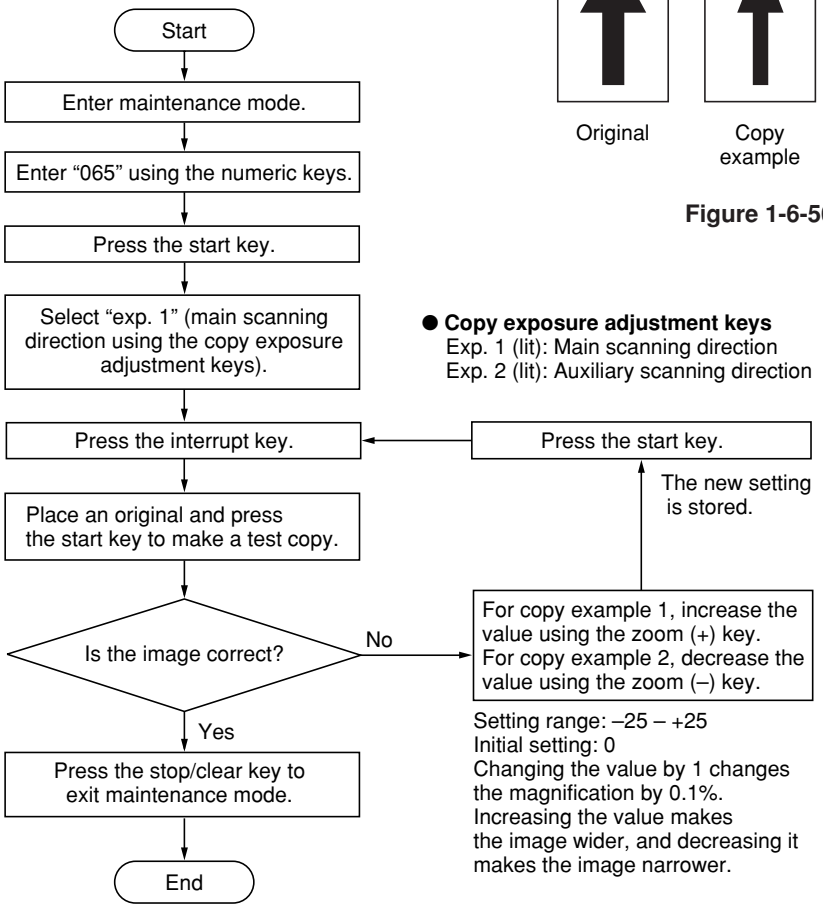

(7) Adjusting magnification of the scanner in the auxiliary scanning direction

Perform the following adjustment if the magnification in the auxiliary scanning direction is not correct.

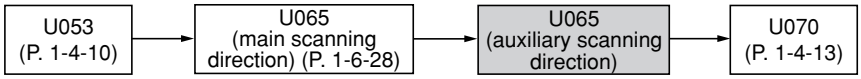

Caution:

Before making the following adjustment, ensure that the above adjustments have been made in maintenance mode.

Procedure

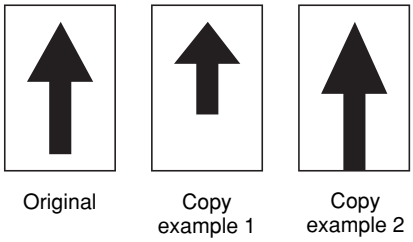

Figure 1-6-57

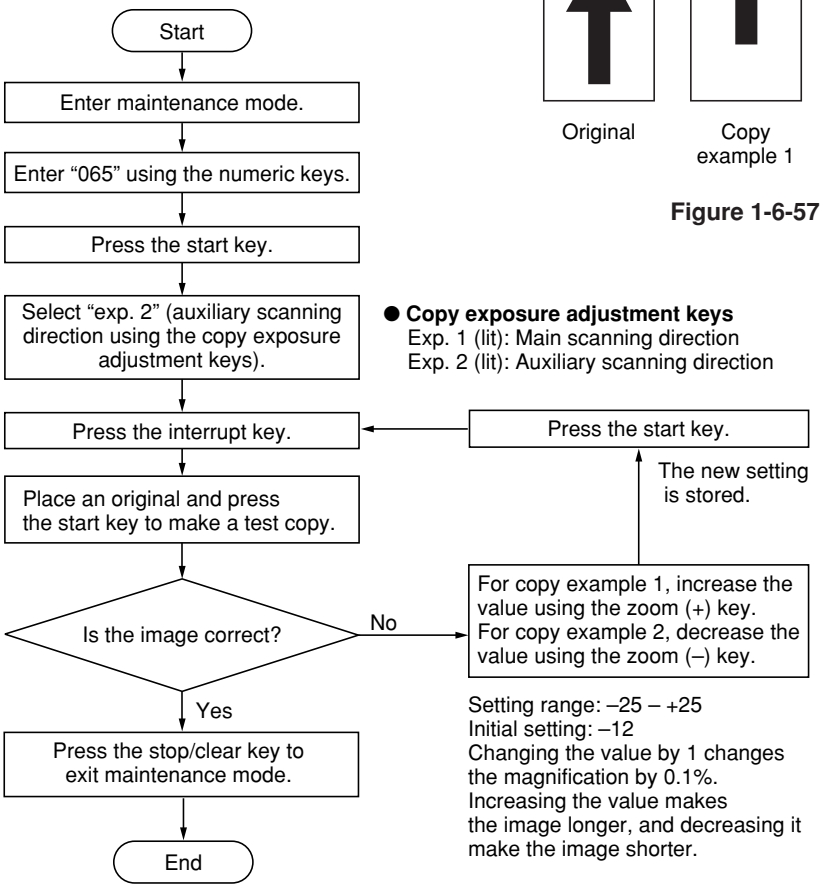

(8) Adjusting the scanner leading edge registration

Perform the following adjustment if there is regular error between the leading edges of the copy image and original.

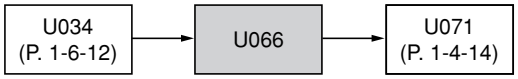

Caution:

Before making the following adjustment, ensure that the above adjustments have been made in maintenance mode.

Procedure

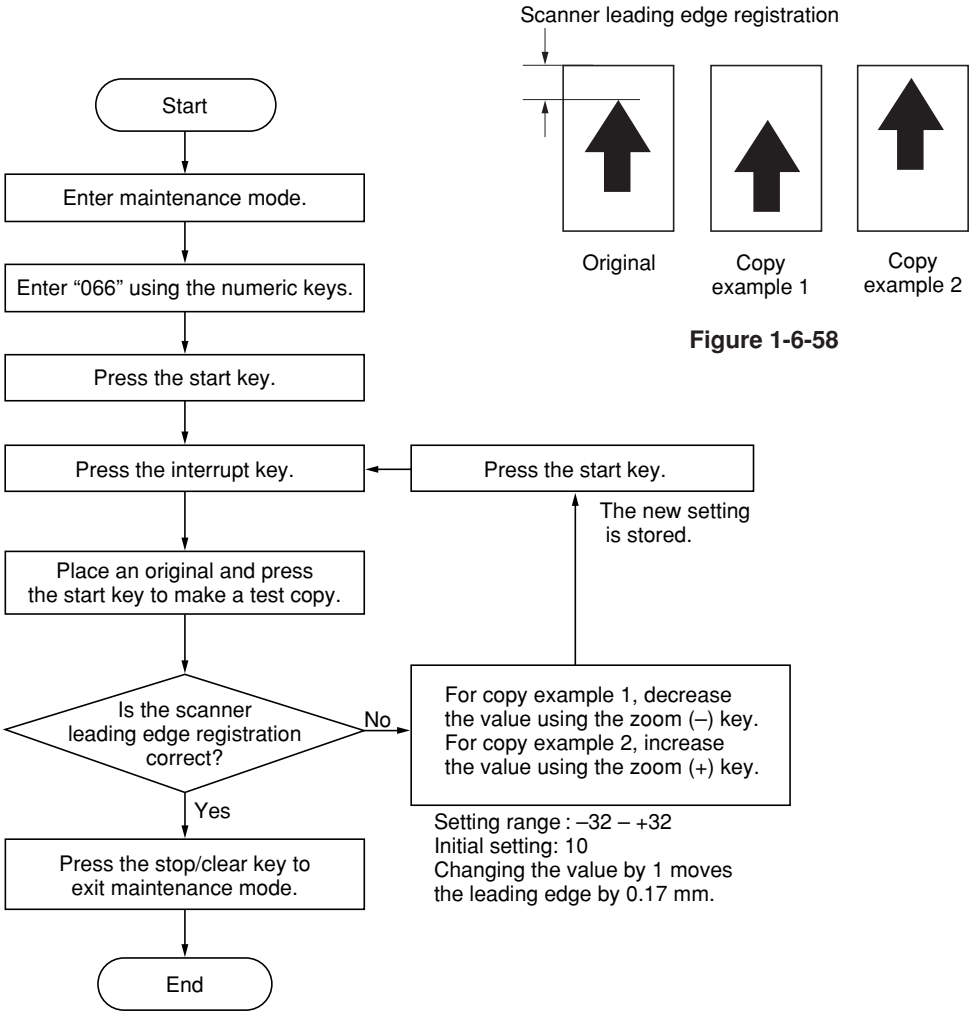

Figure 1-6-58

(9) Adjusting the scanner center line

Perform the following adjustment if there is a regular error between the center lines of the copy image and original.

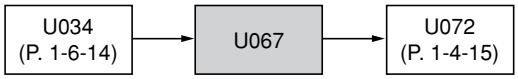

Caution:

Before making the following adjustment, ensure that the above adjustments have been made in maintenance mode.

Procedure

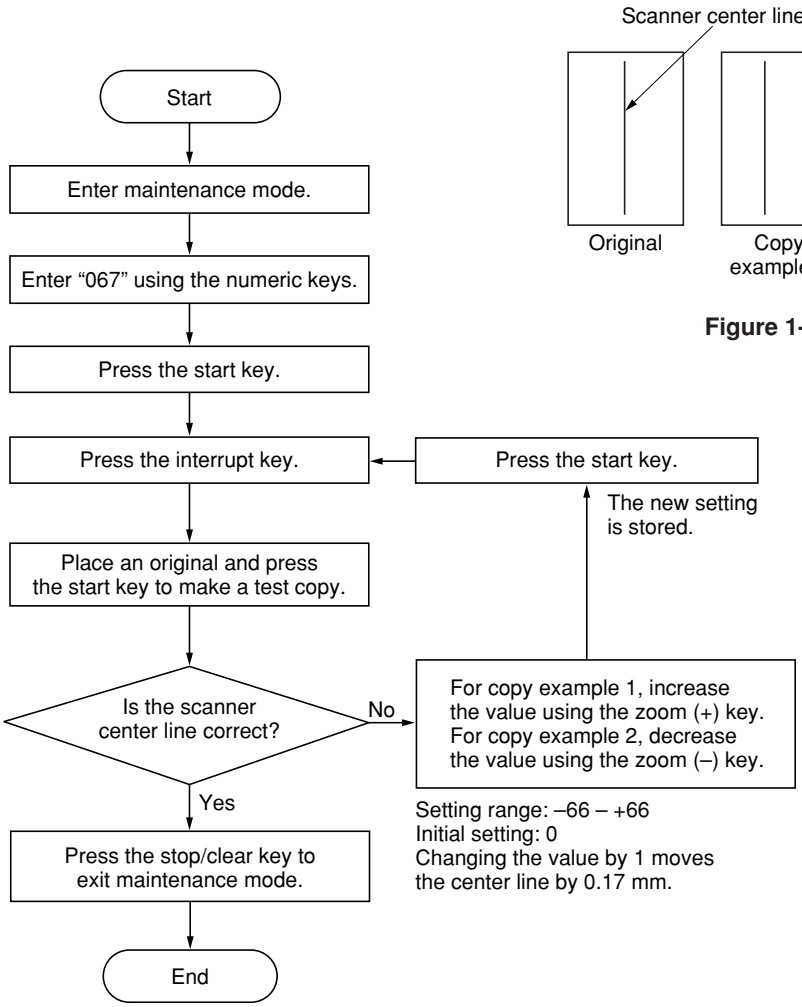

Figure 1-6-59

(10) Adjusting the margins for scanning an original on the contact glass

Perform the following adjustment if the margins are not correct.

U402 (P. 1-6-15) → U403 → U404 (P. 1-4-36)

Caution:

Before making the following adjustment, ensure that the above adjustments have been made in maintenance mode.

Procedure

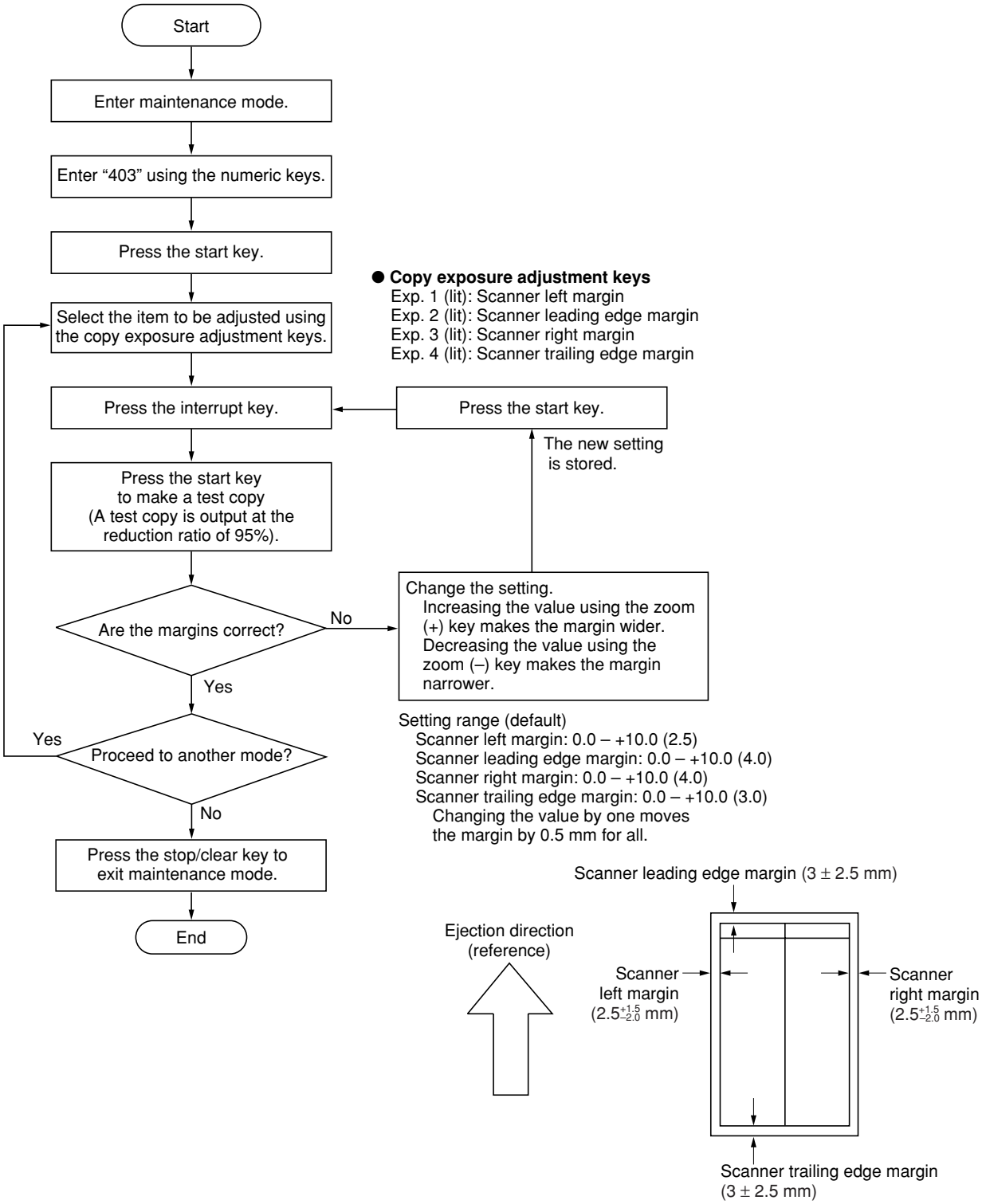

Figure 1-6-60

1-6-4 Drum section

(1) Detaching and refitting the drum unit
Follow the procedure below to replace the drum unit.

Cautions:
• Avoid direct sunlight or strong light when detaching and refitting the drum unit.
• Never touch the drum surface when holding the drum unit.

Procedure
1. Open the front cover and left cover. Remove the waste toner box and toner container.
2. Remove the inner cover.
3. Remove the screw holding the developing release lever.
4. Pull the developing release lever and then release the developing unit.

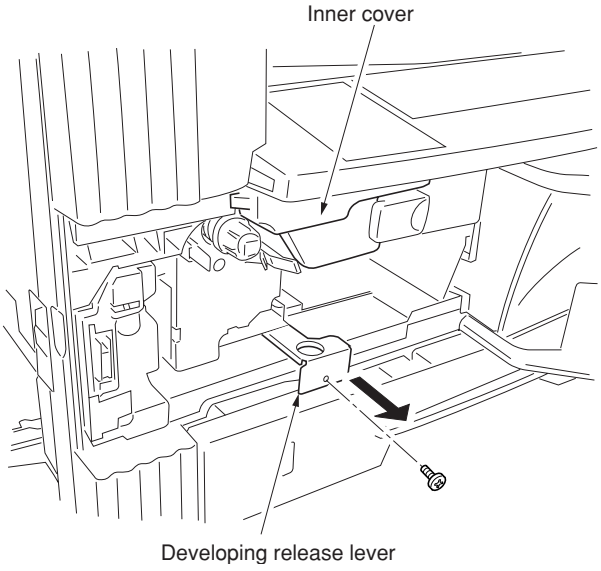

Figure 1-6-61

5. Remove the screw and detach the connector and then remove the drum unit from copier.
6. Replace the drum unit and refit all the removed parts.

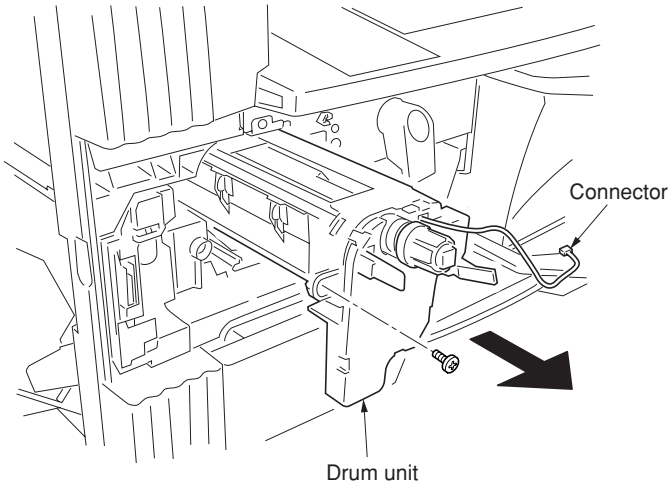

Figure 1-6-62

(2) Detaching and refitting the drum separation claws

Follow the procedure below to replace the drum separation claws.

Procedure

1. Remove the drum unit (see page 1-6-33).
2. Push the drum separation claws with the minus driver from the top of the corner hole and remove the claws.
3. Replace the drum separation claws and refit all the removed parts.

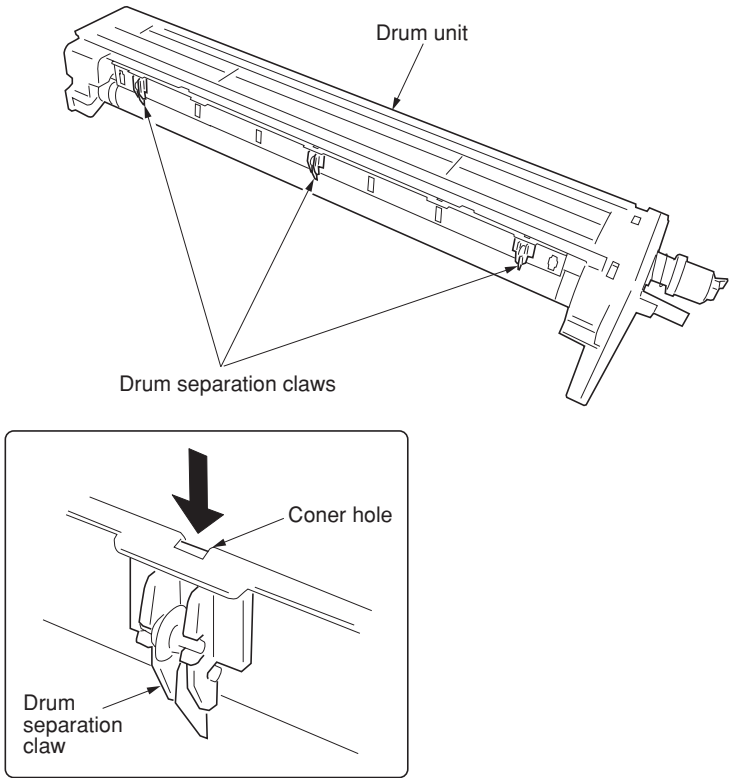

Figure 1-6-63

(3) Detaching and refitting the main charger unit

Follow the procedure below to replace the main charger unit.

Procedure

1. Open the front cover.
2. While lifting the main charger unit toward the upper right, remove the unit from the copier.
3. While pressing the main charger release lever in the direction indicated by the arrow at the removal stopper position to release the removal stopper, remove the main charger unit from the copier.
4. Replace the main charger unit and refit all the removed parts.

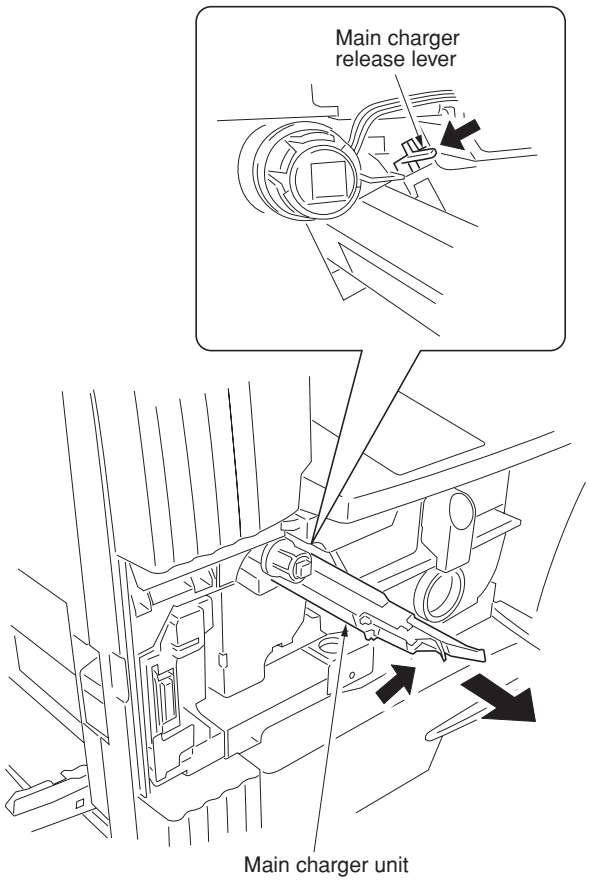

Figure 1-6-64

1-6-5 Developing section

(1) Detaching and refitting the developing unit

Follow the procedure below to replace the developing unit.

Procedure

1. Remove the drum unit (see page 1-6-33).
2. While lifting the developing unit a little, remove the unit from the copier.
3. Replace the developing unit and refit all the removed parts.

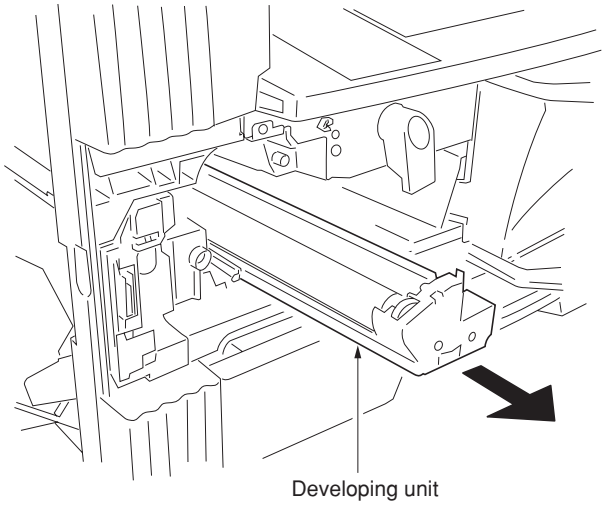

Figure 1-6-65

1-6-6 Transfer section

(1) Detaching and refitting the transfer roller
Follow the procedure below to replace the transfer roller.

Procedure

1. Remove the paper conveying unit (see page 1-6-7).
2. Remove the screw holding each of the front and rear release lever stoppers and then the stoppers from the release lever shaft.

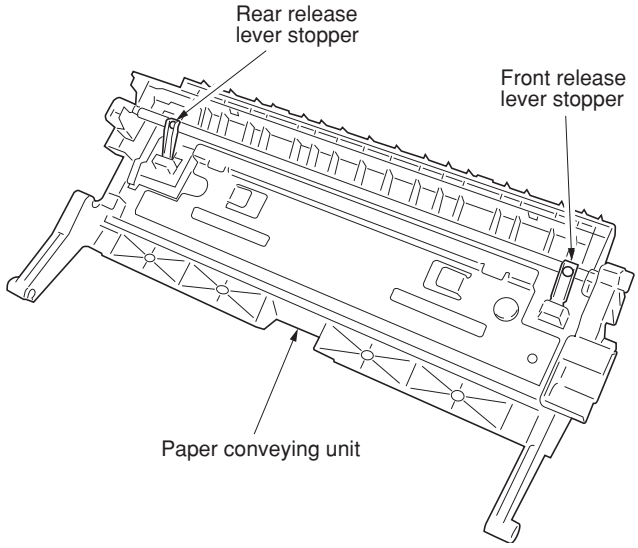

Figure 1-6-66

3. Detach the fitting portions located on the front and rear and then remove the transfer roller from the paper conveying unit.
4. Replace the transfer roller and refit all the removed parts.

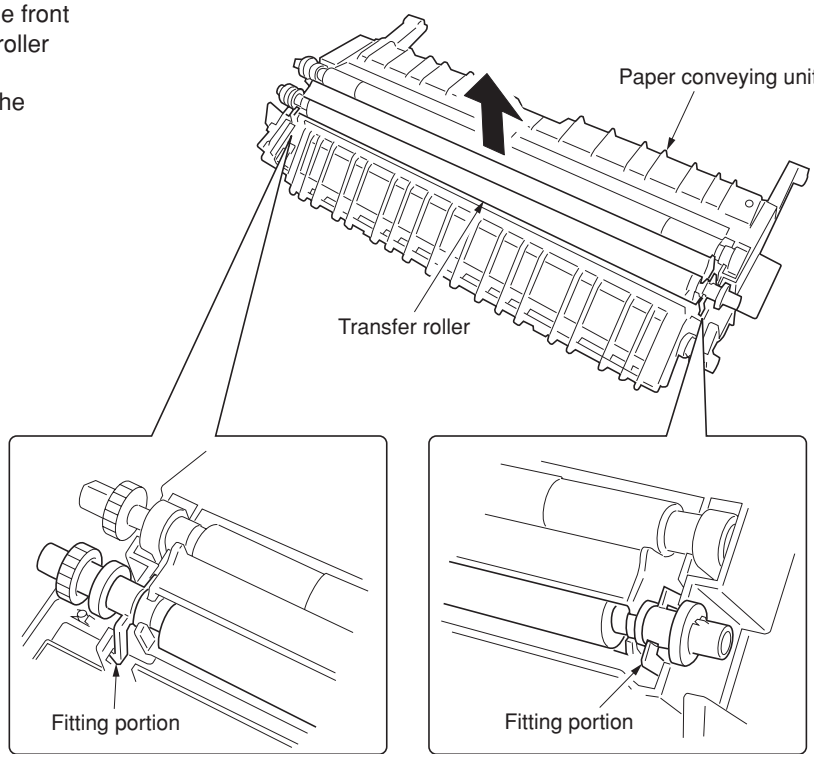

Figure 1-6-67

1-6-7 Fixing section

(1) Detaching and refitting the fixing unit
Follow the procedure below to replace the fixing unit.

Procedure
1. Open the front cover and left cover and then remove the inner cover.
2. Remove the front left cover.

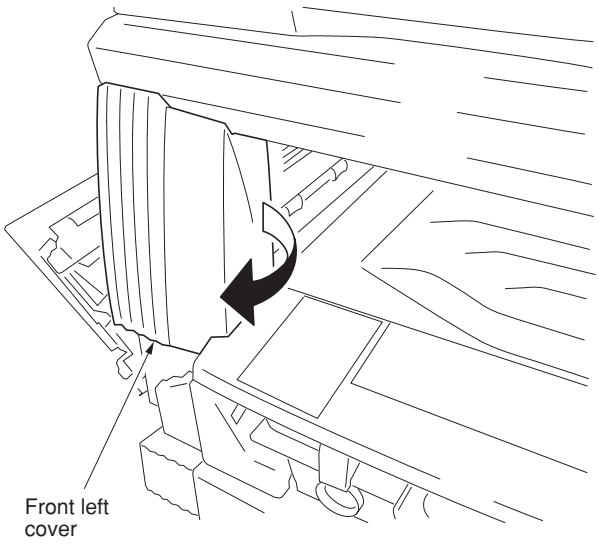

Figure 1-6-68

3. Remove the screw and detach the two connectors and then remove the fixing unit from copier.
4. Replace the fixing unit and refit all the removed parts.

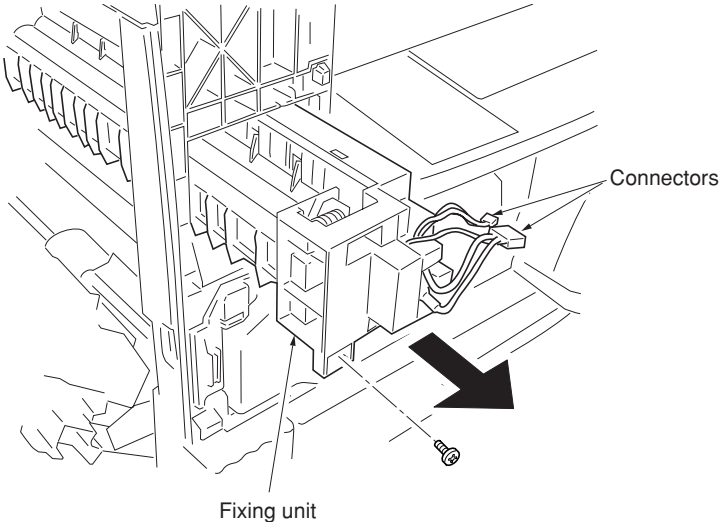

Figure 1-6-69

(2) Detaching and refitting the press roller

Follow the procedure below to replace the press roller.

Procedure

1. Remove the fixing unit (see page 1-6-38).
2. Remove the two screws and then separate the fixing right unit and left unit.

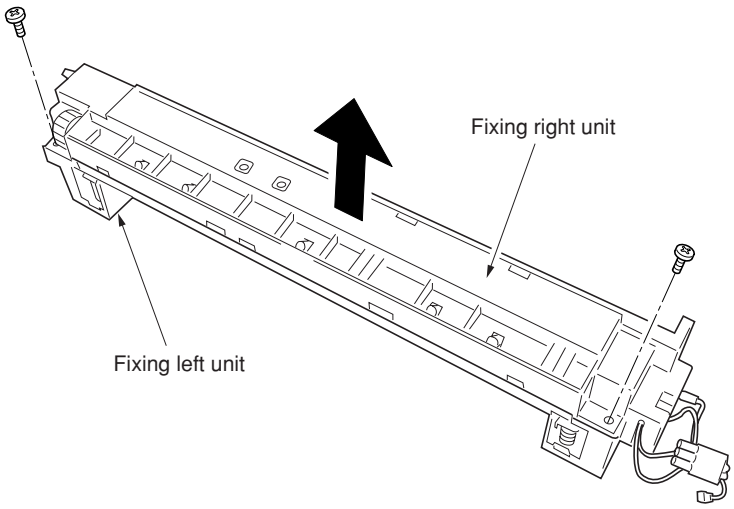

Figure 1-6-70

3. Remove the three screws holding the press roller guide from fixing right unit.

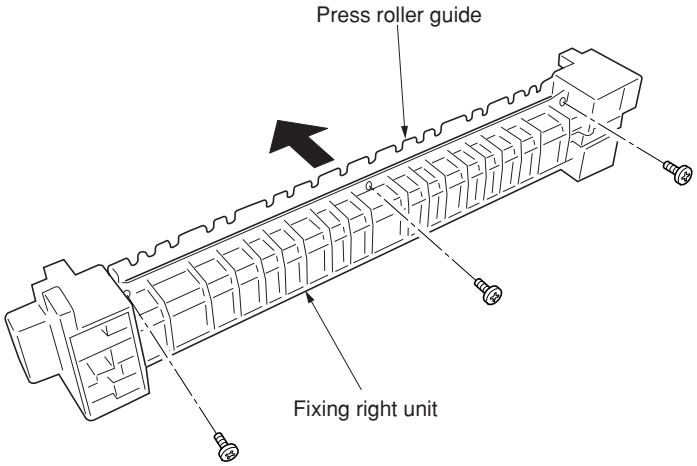

Figure 1-6-71

4. Remove the press roller from the fixing right unit.
5. Replace the press roller and refit all the removed parts.

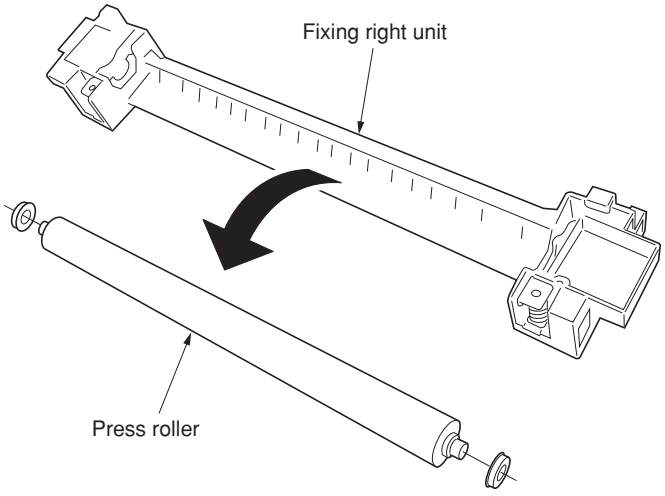

Figure 1-6-72

(3) Detaching and refitting the fixing heater M and S

Follow the procedure below to replace the fixing heater M and S.

Procedure

1. Remove the fixing unit and separate the fixing right unit and left unit (see page 1-6-38, 39).
2. Remove the two screws holding each of the fixing heater M and S on the front and rear of the fixing left unit.

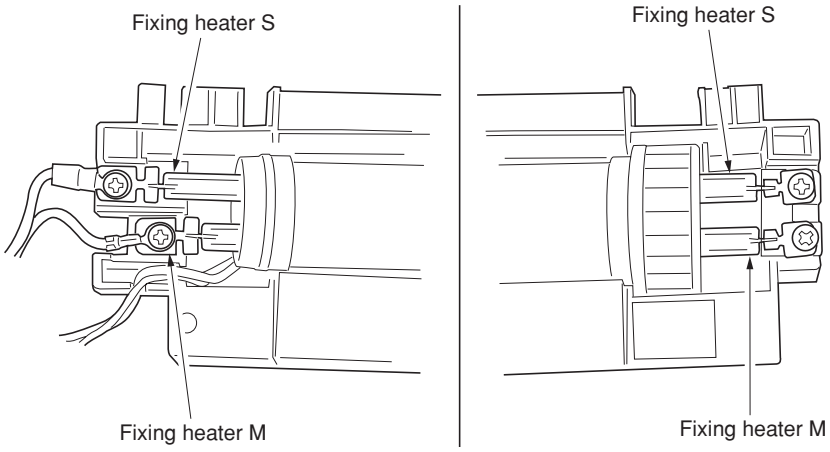

Figure 1-6-73

3. Pull out the fixing heater M and S from the fixing left unit.
4. Replace the fixing heater M and S, and refit all the removed parts.

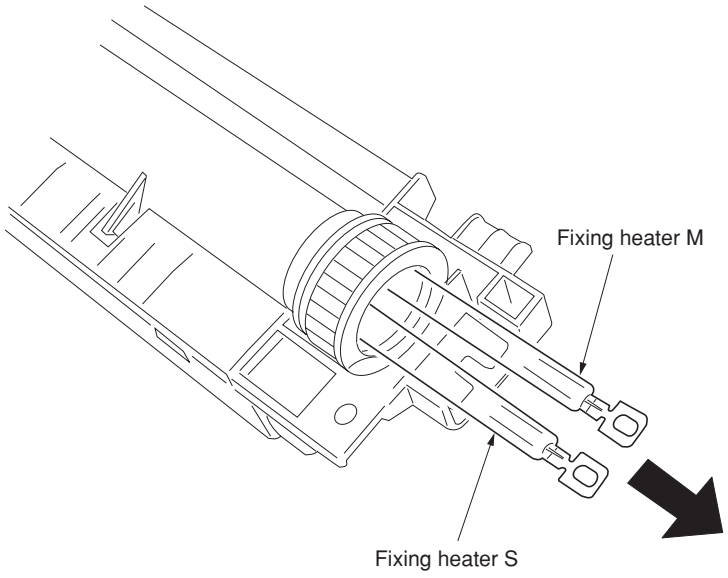

Figure 1-6-74

(4) Detaching and refitting the heat roller separation claws

Follow the procedure below to replace the heat roller separation claws.

Procedure

1. Remove the fixing unit and separate the fixing right unit and left unit (see page 1-6-38, 39).
2. Detach the fitting portions and then remove the heat roller guide from the fixing left unit.

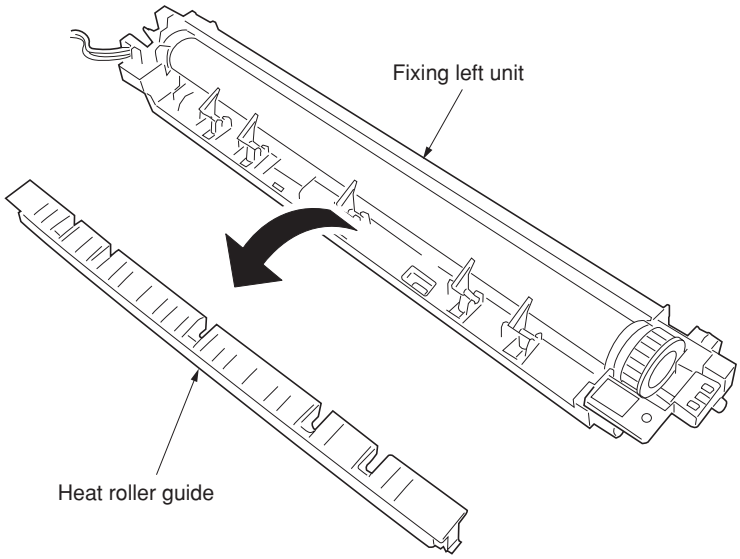

Figure 1-6-75

3. Remove the heat roller separation claws from the fixing left unit.
4. Replace the heat roller separation claws and refit all the removed parts.

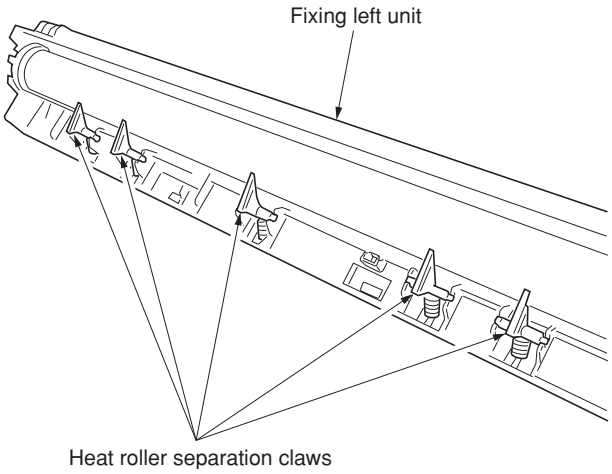

Figure 1-6-76

(5) Detaching and refitting the heat roller

Follow the procedure below to replace the heat roller.

Procedure

1. Remove the fixing unit and separate the fixing right unit and left unit (see page 1-6-38, 39).
2. Remove the heat roller separation claws. (see page 1-6-41).
3. Pull out the heat roller bushing from the fixing left unit and then remove the heat roller.
4. Replace the heat roller and refit all the removed parts.

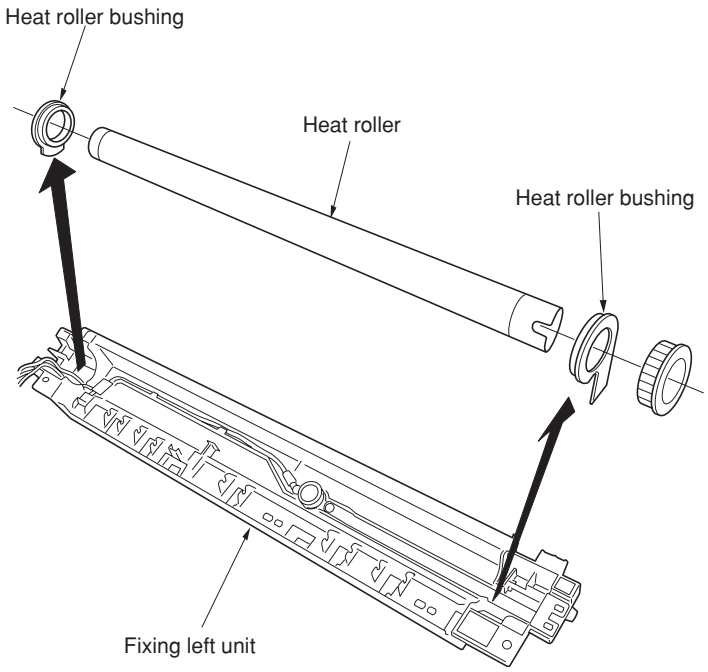

Figure 1-6-77

(6) Detaching and refitting the fixing thermostat

Follow the procedure below to replace the fixing thermostat.

Procedure

1. Remove the fixing unit and separate the fixing right unit and left unit (see page 1-6-38, 39).
2. Remove the heat roller (see page 1-6-42).
3. Remove the two screws holding the fixing thermostat and then the thermostat.
4. Replace the fixing thermostat and refit all the removed parts.

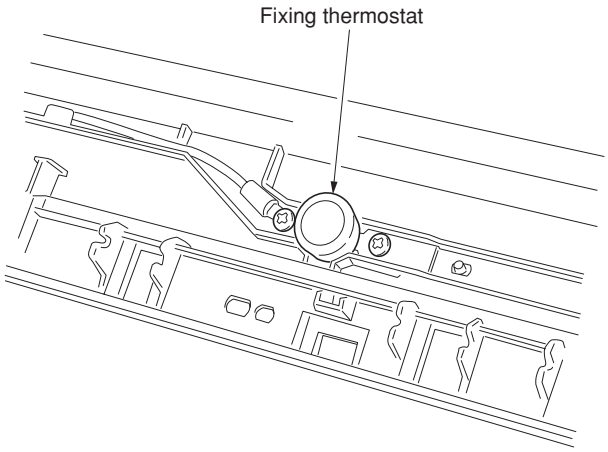

Figure 1-6-78

(7) Detaching and refitting the fixing thermistor

Follow the procedure below to replace the fixing thermistor.

Procedure

1. Remove the fixing unit and separate the fixing right unit and left unit (see page 1-6-38, 39).
2. Remove the heat roller (see page 1-6-42).
3. Remove the screw holding the fixing thermistor and then the thermistor.
4. Replace the fixing thermistor and refit all the removed parts.

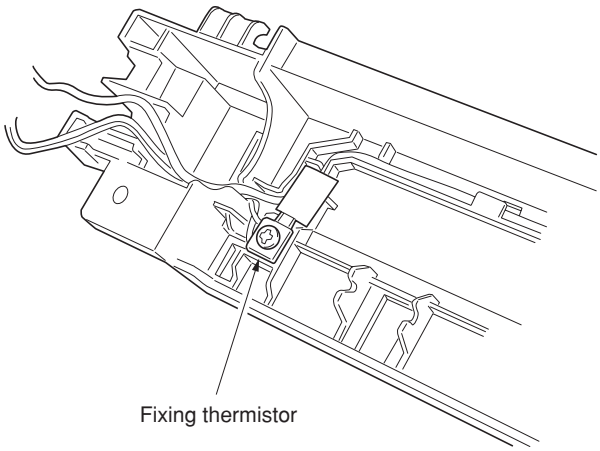

Figure 1-6-79

1-7-1 Upgrading the firmware on the main PCB

Firmware upgrading requires the following tools:
Flash DIMM (P/N 2BZ01180)

Procedure

1. Run maintenance mode U019 to check the version of the ROM.
2. Turn the power switch off and disconnect the power plug.
3. Remove the rear cover and change the jumper switch position on the main PCB to the left side.
4. Insert the DIMM into the DIMM slot on the main PCB. Insert the power plug and turn the power switch on.
5. The upgrade operation starts and the Copy quantity/magnification display changes as follows: JIG → 1% → 99%.
6. When the upgrade operation is complete, the checksum will be displayed and a beep indicating the completion will sound.
7. Turn the power switch off and disconnect the power plug, remove the DIMM from the main PCB, and return the jumper switch to its original position. Reattach the rear cover to its original position.
8. Insert the power plug and turn the power switch on.
9. Run maintenance mode U019 to check that the version of the ROM has changed.

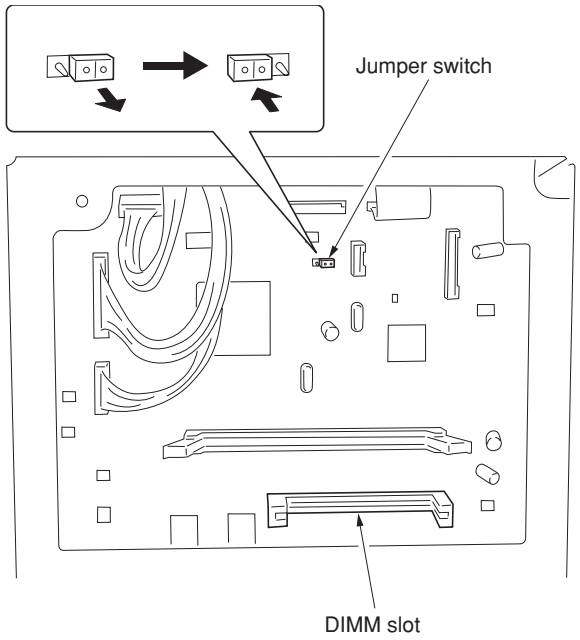

Figure 1-7-1

1-7-2 Adjustment-free variable resistors (VR)

The variable resistors listed below are set at the factory prior to shipping and cannot be adjusted in the field.
• High-voltage PCB: VR201, VR202, VR301
• Drum unit zener PCB: VR1

1-7-3 Remarks on engine PCB or main PCB replacement

When replacing the engine PCB or main PCB, remove the EEPROM from the engine PCB or main PCB that has been removed and then reattach it to the new engine PCB or main PCB.

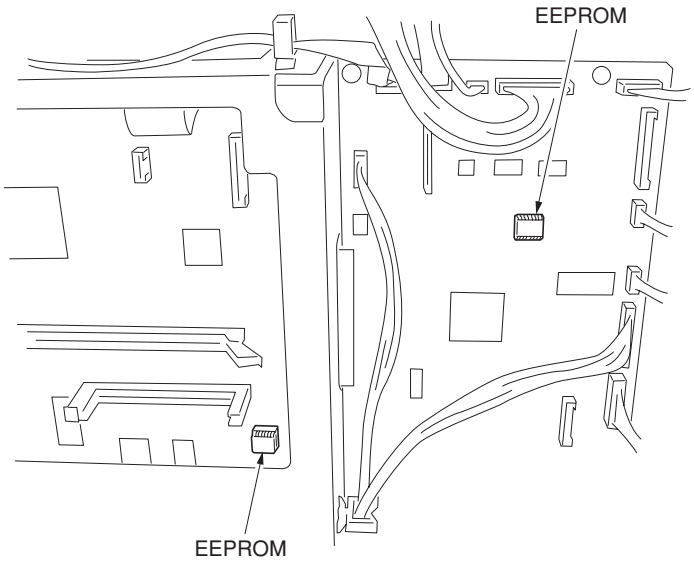

Figure 1-7-2

2-1-1 Paper feed section

The paper feed section conveys paper from the drawer or bypass tray to the left and right registration rollers, at which point secondary feed takes place and the paper travels to the transfer section in sync with the printing timing.
Drawer can hold up to 300 sheets of paper. Paper is fed from the drawer by the rotation of the forwarding pulley and paper feed pulley. The separation pulley prevents multiple sheets from being fed at one time, via the torque limiter.
The bypass tray can hold up to 50 sheets of paper. Paper is fed from the bypass tray by the rotation of the bypass paper feed pulley.

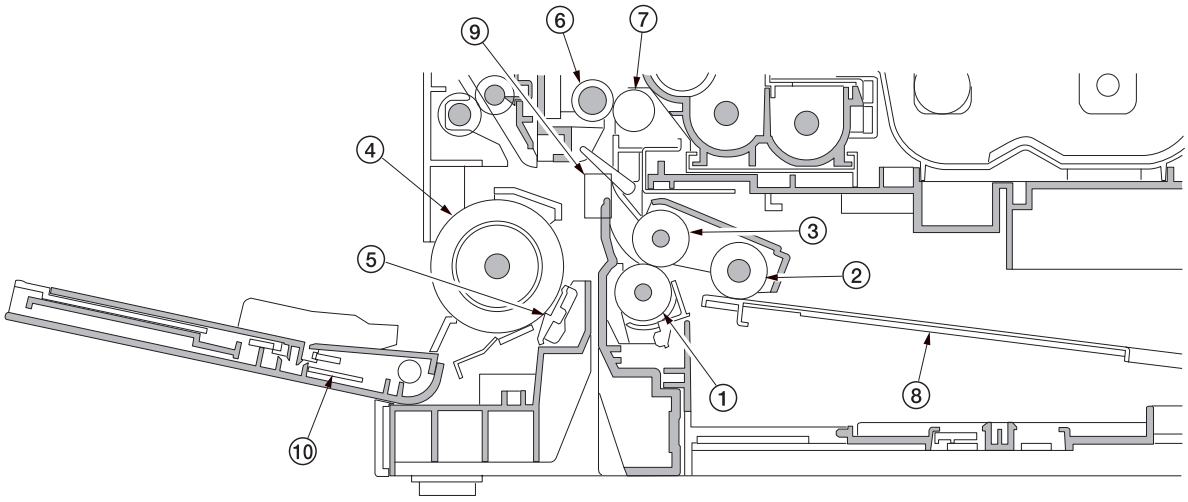

Figure 2-1-1 Paper feed section

① Separation pulley
② Forwarding pulley
③ Peper feed pulley
④ Bypass paper feed pulley
⑤ Bypass separation pad
⑥ Left registration roller
⑦ Right registration roller
⑧ Drawer lift
⑨ Registration switch (RSW)
⑩ Bypass paper width switch (BYPPWSW)

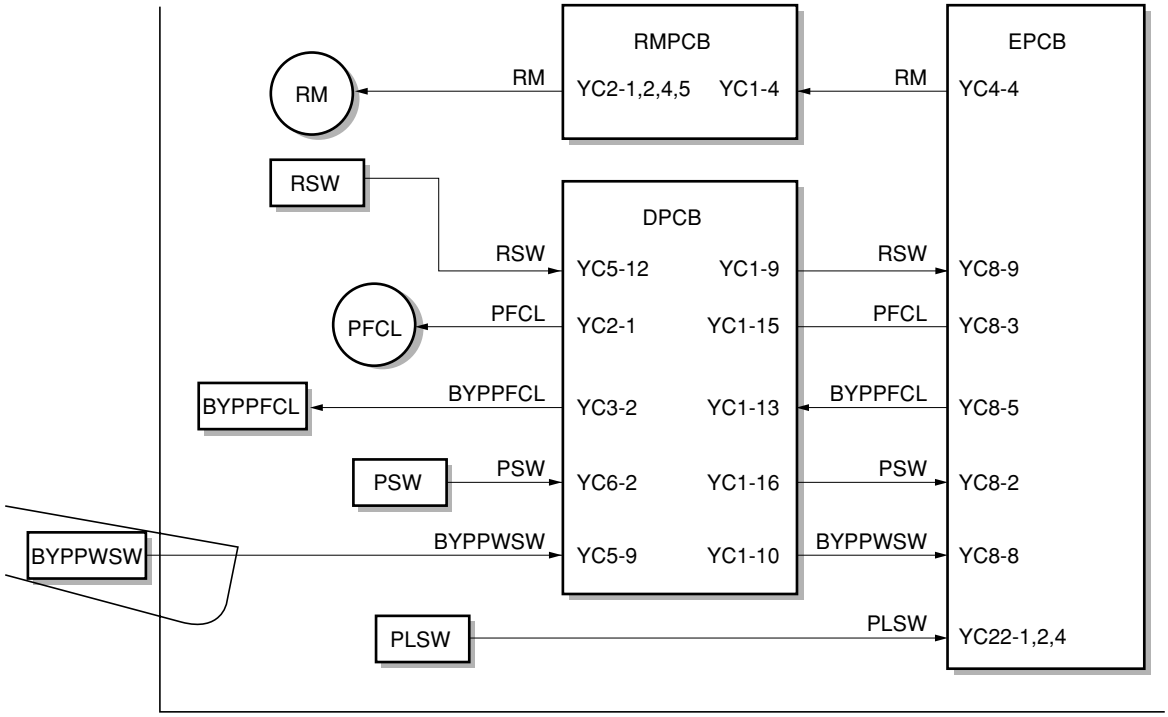

Figure 2-1-2 Paper feed section block diagram

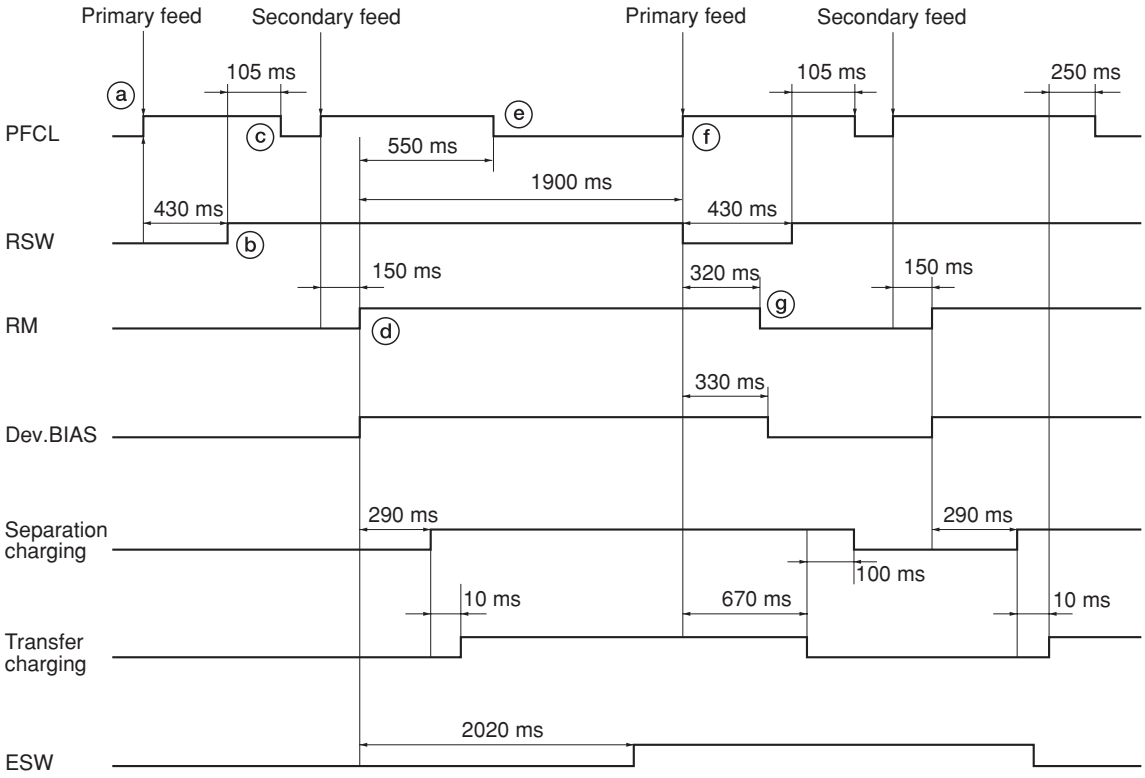

Timing chart 2-1-1 Paper feed from the drawer (A4, single-sided copy)

ⓐ: The paper feed clutch (PFCL) turns on to start primary paper feed.
ⓑ: 430 ms after the paper feed clutch (PFCL) turns on, the registration switch (RSW) turns on.
ⓒ: 105 ms after the registration switch (RSW) turns on, the paper feed clutch (PFCL) turns off.
ⓓ: 150 ms after the paper feed clutch (PFCL) turns on, the registration motor (RM) turns on to start secondary paper feed.
ⓔ: 550 ms after the registration motor (RM) turns on, the paper feed clutch (PFCL) turns off.
ⓕ: 1900 ms after the registration motor (RM) turns on, the registration switch (RSW) turns off. At the same time, the paper feed clutch (PFCL) turns on to start primary paper feed of the second sheet.
ⓖ: 320 ms after the registration switch (RSW) turns off, the registration motor (RM) turns off.

2-1-2 Optical section

The optical section consists of the scanner, mirror frames and the image scanning unit for scanning and the laser scanner unit for printing.

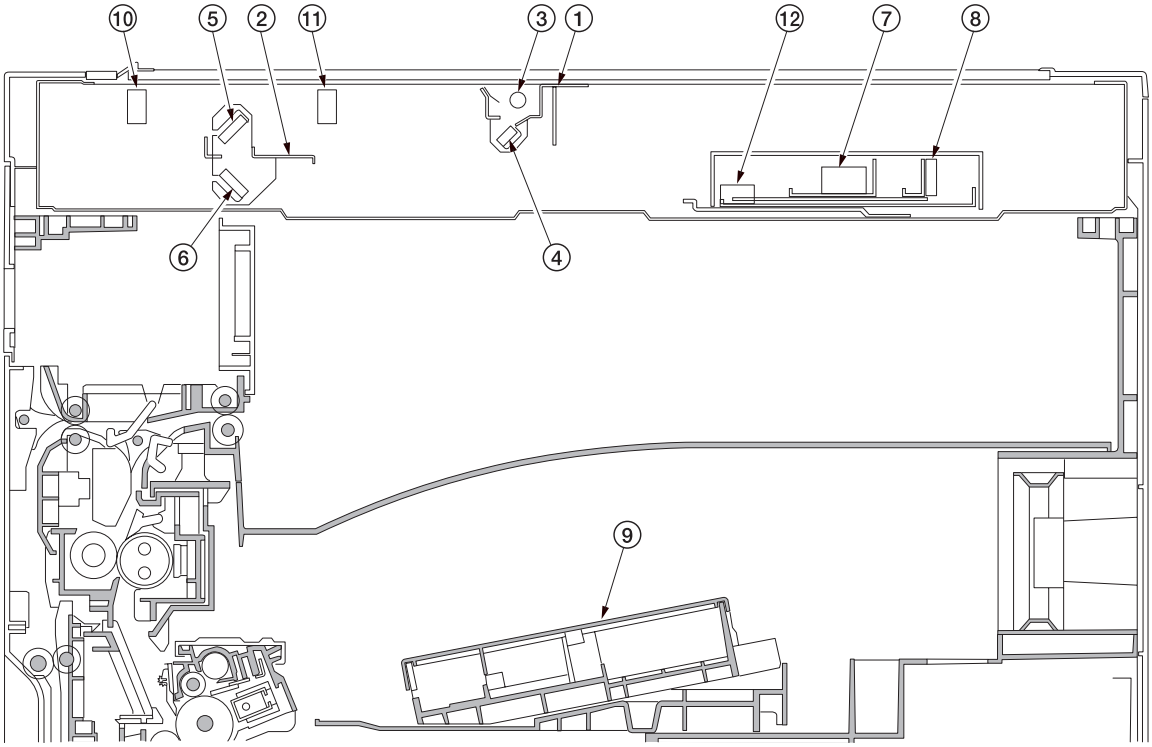

Figure 2-1-3 Optical section

① Mirror 1 frame
② Mirror 2 frame
③ Exposure lamp (EL)
④ Mirror 1
⑤ Mirror 2
⑥ Mirror 3
⑦ Image scanning unit (ISU)
⑧ CCD PCB (CCDPCB)
⑨ Laser scanner unit (LSU)
⑩ Scanner home position switch (SHPSW)
⑪ Original detection switch (ODSW)
⑫ Original size detection sensor (OSDS)

(1) Original scanning

The original image is illuminated by the exposure lamp (EL) and scanned by the CCD PCB (CCDPCB) in the image scanning unit via the three mirrors, the reflected light being converted to an electrical signal.
The scanner and mirror frames travel to scan on the optical rails on the front and rear of the machine to scan from side to side. The speed of the mirror frames is half the speed of the scanner. When the DP is used, the scanner and mirror frames stop at the DP original scanning position to start scanning.

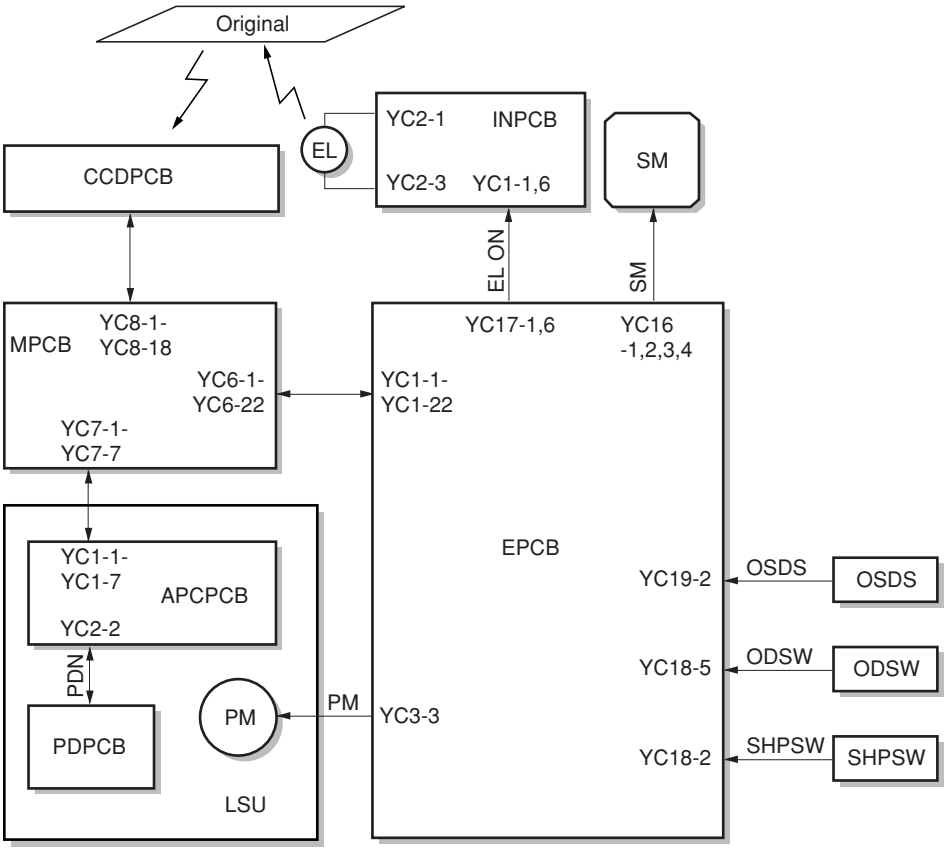

Figure 2-1-4 Optional section block diagram

(2) Image printing
The image data scanned by the CCD PCB (CCDPCB) is processed on the main PCB (MPCB) and transmitted as image printing data to the laser scanner unit (LSU). By repeatedly turning the laser on and off, the laser scanner unit forms a latent image on the drum surface.

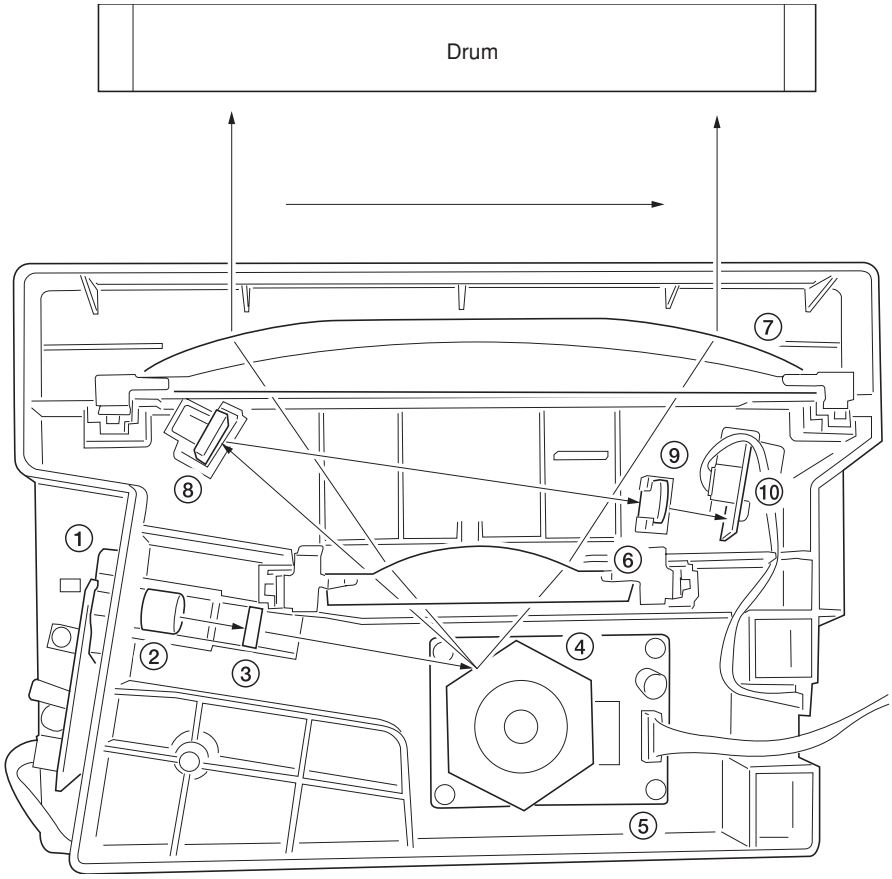

Figure 2-1-5 Laser scanner unit

① Laser diode: Generates the laser beam which forms a latent image on the drum.
② Collimator lens: Collimates the diffused laser beam emitted from the laser diode to convert it into a cylindrical beam.
③ Cylindrical lens: Shapes the collimated laser beam to suit the printing resolution.
④ Polygon mirror: Six-facet mirror that rotates at approximately 23619 rpm with each face reflecting the laser beam toward the drum for one main-direction scan.
⑤ Polygon motor: Drives the polygon mirror.
⑥ Fθ lens: Corrects for non-linearity of the laser beam scanning speed on the drum surface, keeps the beam diameter constant and corrects for the vertical alignment of the polygon mirror to ensure that the focal plane of the laser beam is on the drum surface.
⑦ Fθ lens: Corrects for non-linearity of the laser beam scanning speed on the drum surface, keeps the beam diameter constant and corrects for the vertical alignment of the polygon mirror to ensure that the focal plane of the laser beam is on the drum surface.
⑧ PD sensor mirror: Reflects the laser beam to the PD sensor to generate the main-direction (horizontal) sync signal.
⑨ Cylindrical correcting lens: Corrects for the deviation of the laser beam reflected by the PD sensor mirror to the PD sensor.
⑩ PD sensor: Detects the beam reflected by the PD sensor mirror, outputting a signal to the main PCB (MPCB) to provide timing for the main-direction sync signal.

The dimensions of the laser beam are as shown in Figure 2-1-6.

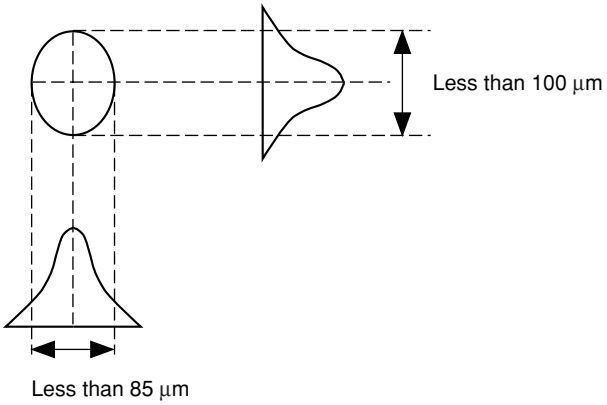

Figure 2-1-6

Scanning in the main direction is provided by the rotating polygon mirror, while scanning in the auxiliary direction is provided by the rotating drum, forming a static latent image on the drum.
The static latent image of the letter “A”, for example, is formed on the drum surface as shown in Figure 2-1-7. Electrical charge is dissipated on the area of the drum surface irradiated by the laser.
The focal point of the laser beam is moved line by line, and adjacent lines slightly overlap each other.

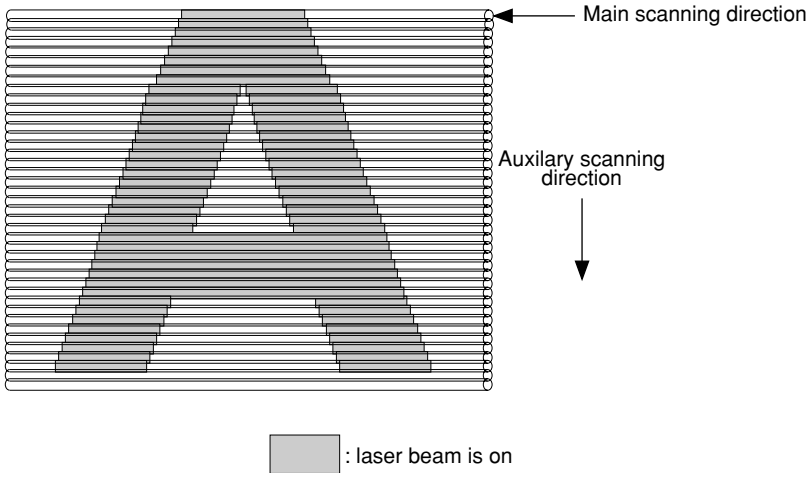

Figure 2-1-7

2-1-3 Drum section

The drum section consists of the drum, main charger section, cleaning section and cleaning lamp.
The main charger section consists of main charger wire, main charger grid and main charger shield, and the drum is charged by a high voltage applied to the main charger wire. In addition, this section is equipped with a manual main charger cleaner that is used for cleaning the main charger wire.
The cleaning section consists of the cleaning blade and cleaning roller that removes residual toner from the drum surface after the transfer process, and the cleaning spiral that carries the residual toner back to the waste toner box.
The cleaning lamp (CL) consists of LEDs which remove residual charge from the drum surface.

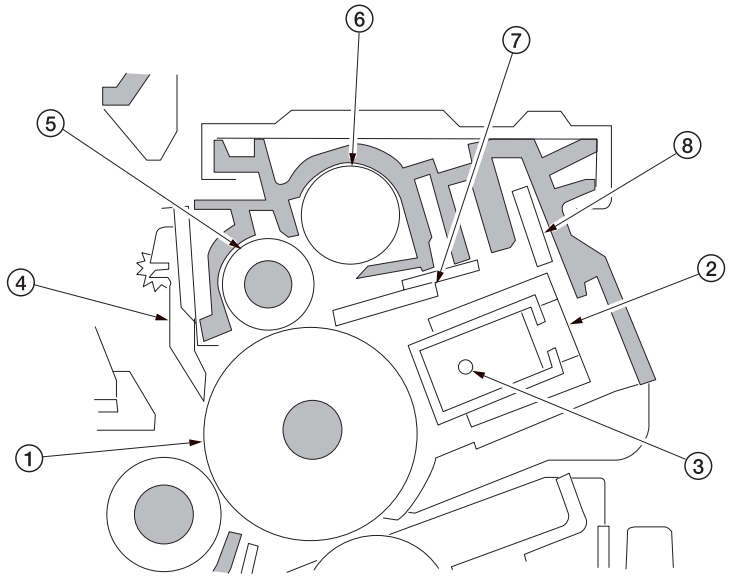

Figure 2-1-8 Drum section

① *Drum*
② Main charger unit
③ Main charger wire
④ Drum separation claw
⑤ Cleaning roller
⑥ Cleaning spiral
⑦ Cleaning blade
⑧ Cleaning lamp (CL)

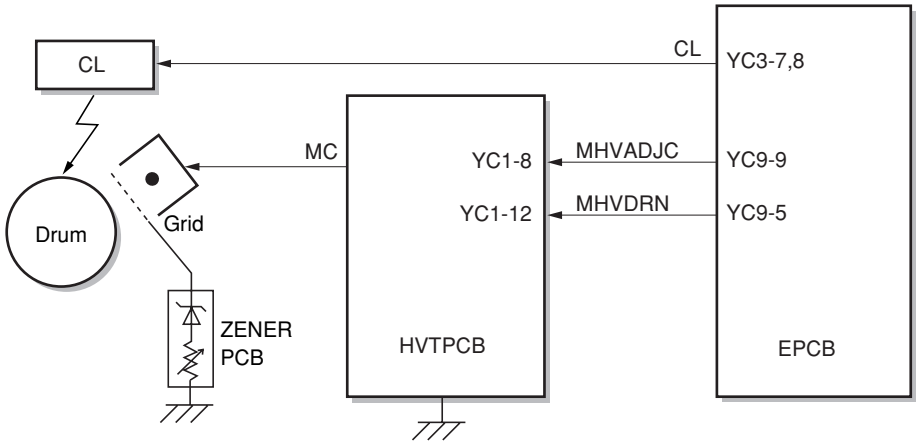

Figure 2-1-9 Drum section block diagram

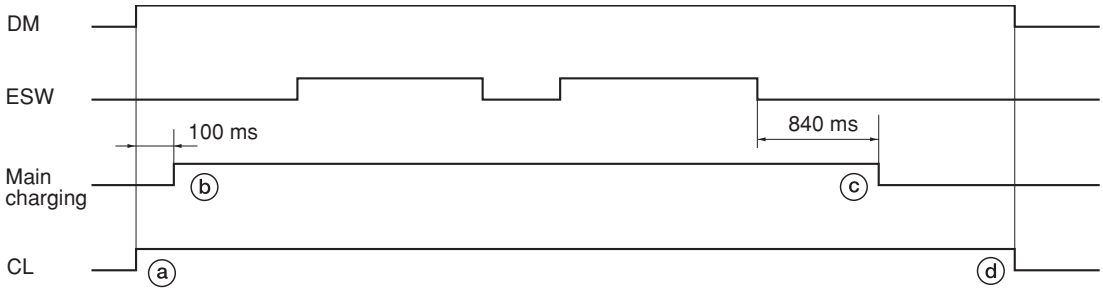

Timing chart 2-1-2 Main charging section operation

ⓐ: The drive motor (DM) turns on at the same time, the cleaning lamp (CL) turns on.
ⓑ: 100 ms after the drive motor (DM) turns on, main charging starts.
ⓒ: 840 ms after the exit switch (ESW) off, main charging is completed.
ⓓ: The drive motor (DM) turns off at the same time, the cleaning lamp (CL) turns off.

2-1-4 Developing section

The developing section consists of the developing unit and the toner container.
The developing unit consists of the developing roller where a magnetic brush is formed, the doctor blade and the developing spirals that agitate the toner.
Also, the toner container sensor (TCS) checks whether or not toner remains in the toner container.

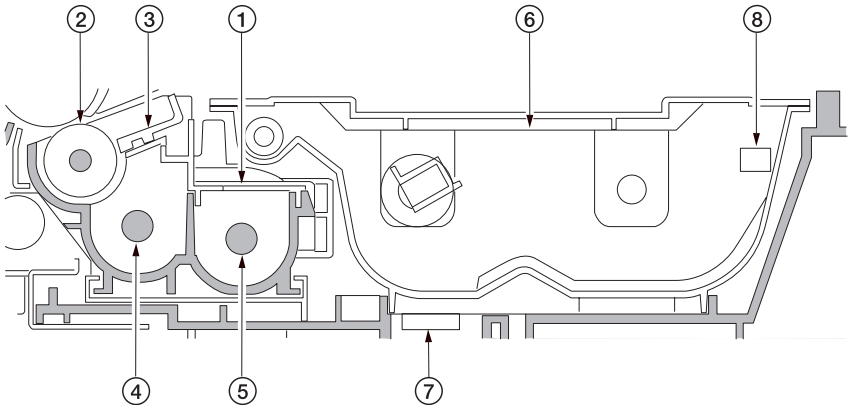

Figure 2-1-10 Developing section

① Developing unit
② Developing roller
③ Doctor blade
④ Left developing spiral
⑤ Right developing spiral
⑥ Toner container
⑦ Toner container sensor (TCS)
⑧ Toner container detection switch (TCDSW)

(1) Formation of magnetic brush

The developing roller consists of a magnet roller with four poles and a sleeve roller. Rotation of the sleeve roller around the magnet roller entrains toner, which in turn forms a magnetic brush at pole N1 on the magnet roller. The height of the magnetic brush is regulated by the doctor blade; the developing result is affected by the position of the poles on the magnet roller and the position of the doctor blade.
A developing bias voltage generated by the high-voltage PCB (HVTPCB) is applied to the developing roller to provide image contrast.

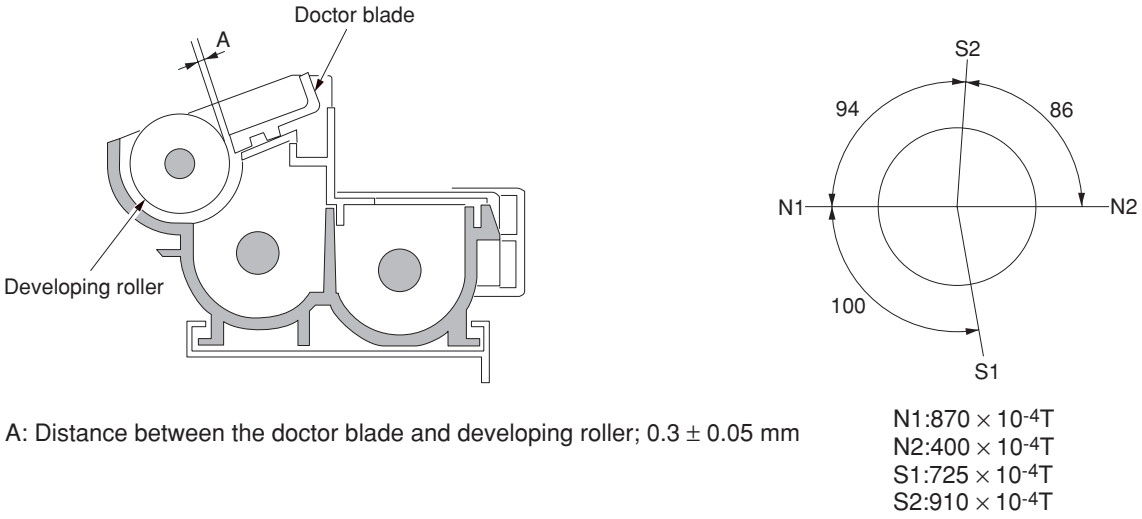

A: Distance between the doctor blade and developing roller; 0.3 ± 0.05 mm

N1:870 × 10^{-4}T
N2:400 × 10^{-4}T
S1:725 × 10^{-4}T
S2:910 × 10^{-4}T

Figure 2-1-11 Forming a magnetic brush

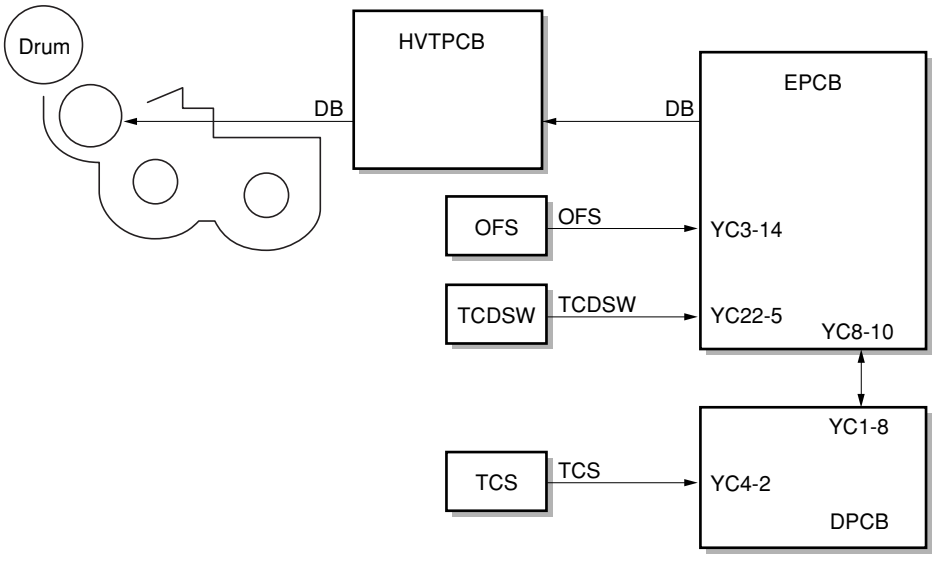

Figure 2-1-12 Developing section block diagram

(2) Single component developing system

This machine uses the single component developing system, and reversal processing is performed with a + charged drum (a-Si) and a + charged magnetic toner.

With the single component developing system, toner is electrically charged by friction with the developing sleeve and + charged when it passes through the magnetic doctor blade. The toner that has passed through the magnetic doctor blade forms a uniform layer on the developing sleeve. When the toner layer comes to the location where the developing sleeve is the nearest to the drum, toner moves between the drum and the developing sleeve by an electric field of the magnetic pole. Then, when the developing sleeve rotates and passes through the nearest location to the drum, on the portion of the drum that has been exposed to light, toner is attracted toward the drum by potential difference between the developing bias and the drum surface and development is performed. On the other hand, on the portion of the drum that has not been exposed to light, toner is attracted toward the sleeve and development is not performed. When toner comes to an area where the gap between the drum and the developing sleeve is large, an electric field disappears and toner does not leave the developing sleeve. Development is complete.

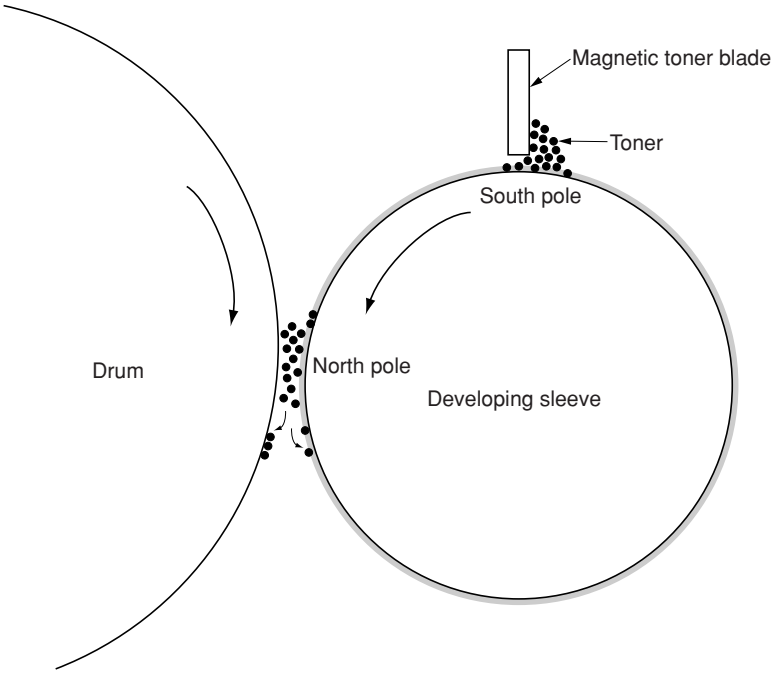

Figure 2-1-13 Single component developing system

Developing bias parameters

For the bias to the developing sleeve, an alternating current (AC) is applied. Parameters for the developing bias are shown below.

Vp-p: Difference between the maximum and the minimum of applied voltage
1.6 kV (fixed)
Vf: Frequency
Typically 2.4 kHz. This value varies depending on the preset value of the drive time and the environmental correction. (Can be adjusted with the maintenance item U101.)
Duty: Ratio of time where + voltage is applied in a cycle
Typically 45%. (Can be adjusted with the maintenance item U101.)
Vdc: Developing shift bias potential 290 V

Supplementation
Vo: Drum surface potential on non-image area (area not exposed to light)
VL: Drum surface potential on image area (area exposed to light)

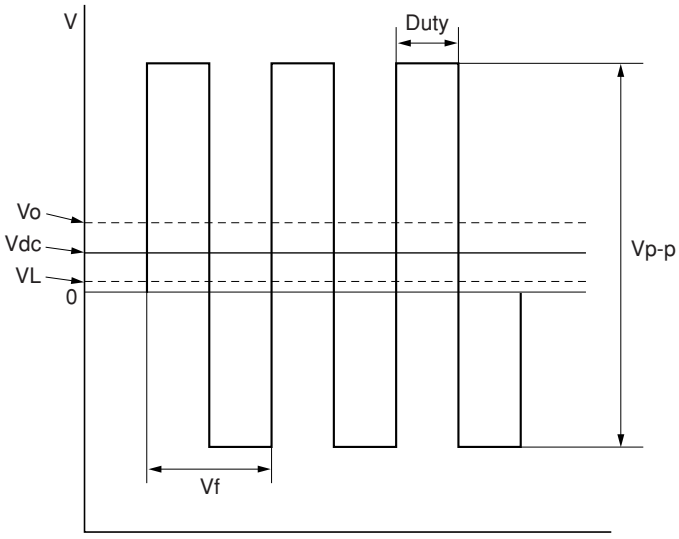

Figure 2-1-14 Developing bias waveformsa

2-1-5 Transfer and separation sections

The transfer and separation sections consists of the transfer roller, separation electrode and drum separation claws. A high voltage generated by the high-voltage PCB (HVTPCB) is applied to the transfer roller for transfer charging. Paper after transfer is separated from the drum by applying separation bias that is output from the high-voltage PCB (HVTPCB) to the separation electrode.

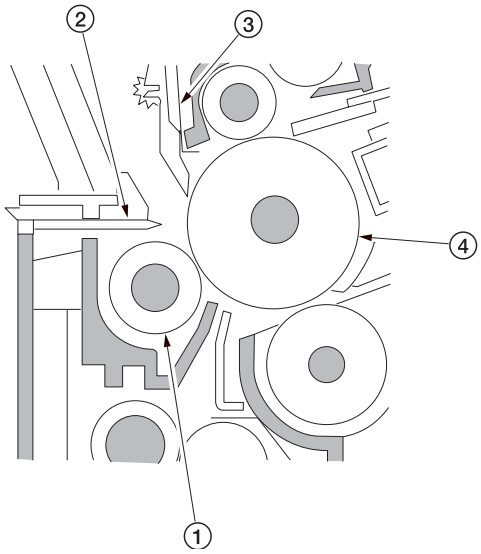

Figure 2-1-15 Transfer and separation sections

① Transfer roller
② Separation electrode
③ Drum separation claw
④ Drum

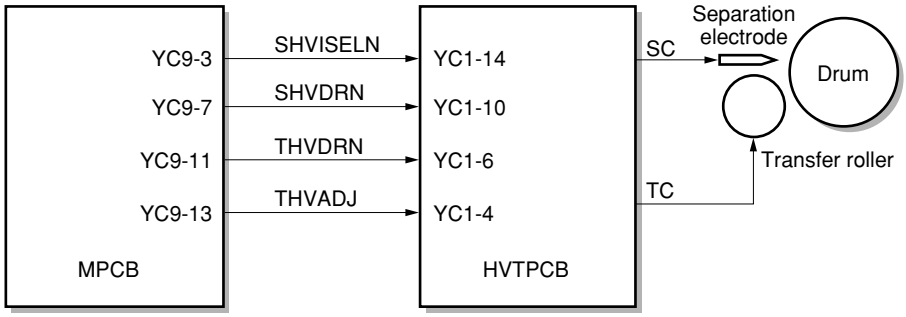

Figure 2-1-16 Transfer and separation sections block diagram

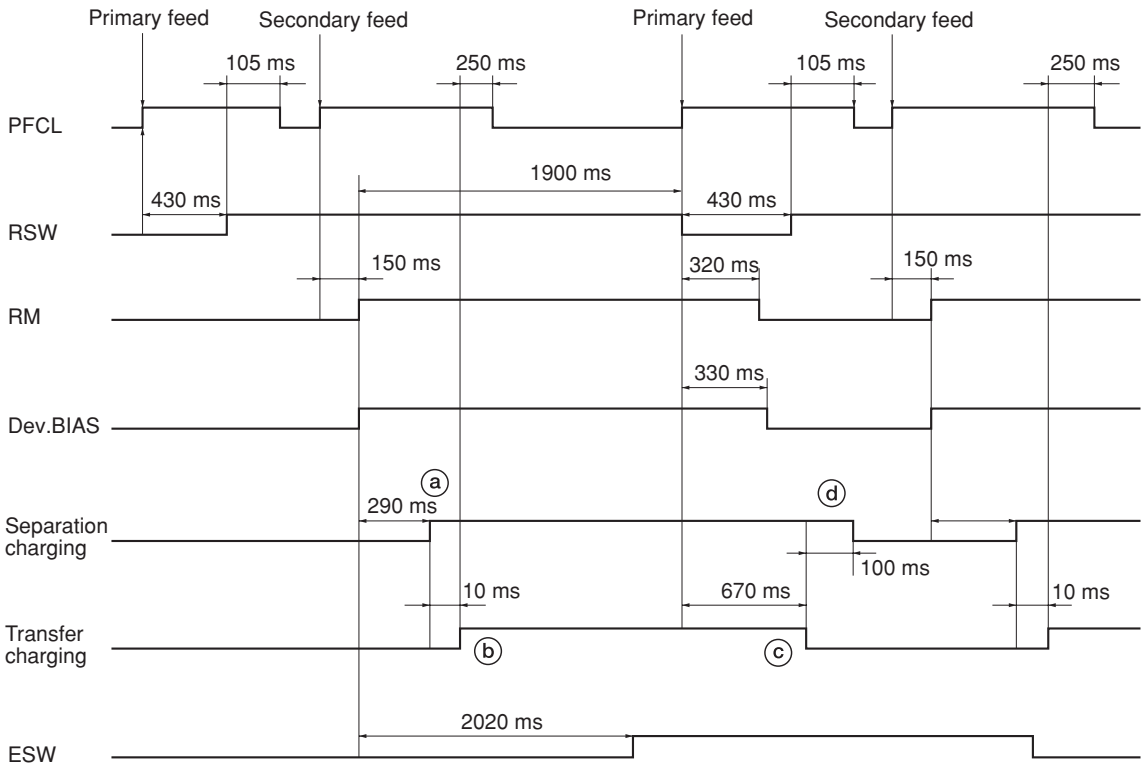

Timing chart 2-1-3 Transfer and separation sections operation

ⓐ: 290 ms after the registration motor (RM) turns on to start secondary paper feed, separation charging starts.
ⓑ: 10 ms after separation charging starts, transfer charging starts.
ⓒ: 670 ms after the registration switch (RSW) turns off, transfer charging ends.
ⓓ: 100 ms after transfer charging ends, separation charging ends.

2-1-6 Fixing section

The fixing section consists of the parts shown in figure. When paper reaches the fixing section after the transfer process, it passes between the press roller and heat roller, which is heated by fixing heaters M or S (FH-M or FH-S). Pressure is applied by the fixing unit pressure springs so that the toner on the paper is melted, fused and fixed onto the paper. The heat roller is heated by fixing heaters M or S (FH-M or FH-S) inside it; its surface temperature is detected by the fixing thermistor (FTH) and is regulated by the fixing heaters turning on and off.
If the fixing section becomes abnormally hot, fixing thermostat (FTS) operates shutting the power to the fixing heaters off.
When the fixing process is completed, the paper is separated from the heat roller by its separation claws and is conveyed from the copier to exit and switchback section.

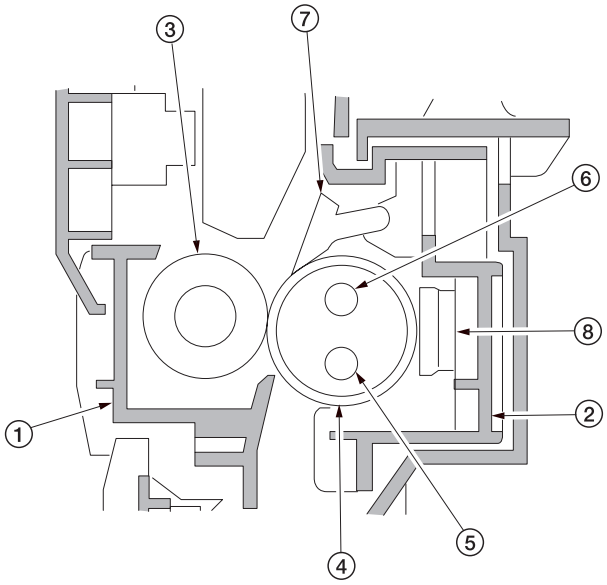

① Left fixing unit
② Right fixing unit
③ Press roller
④ Heat roller
⑤ Fixing heater M (FH-M)
⑥ Fixing heater S (FH-S)
⑦ *Heat roller separation claw*
⑧ *Fixing thermostat (FTS)*

Figure 2-1-17 Fixing section

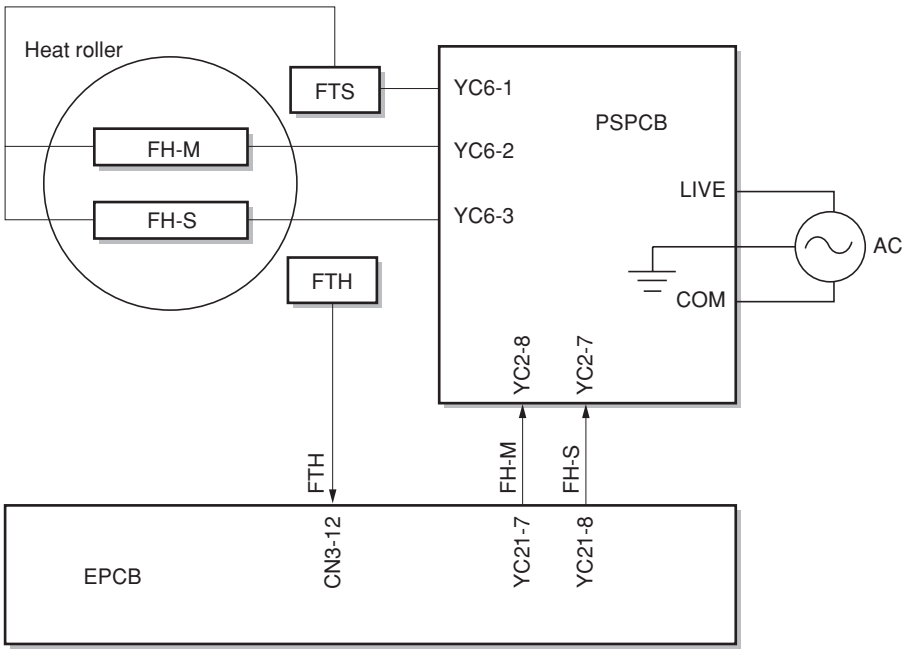

Figure 2-1-18 Fixing section block diagram

(1) Fixing temperature system

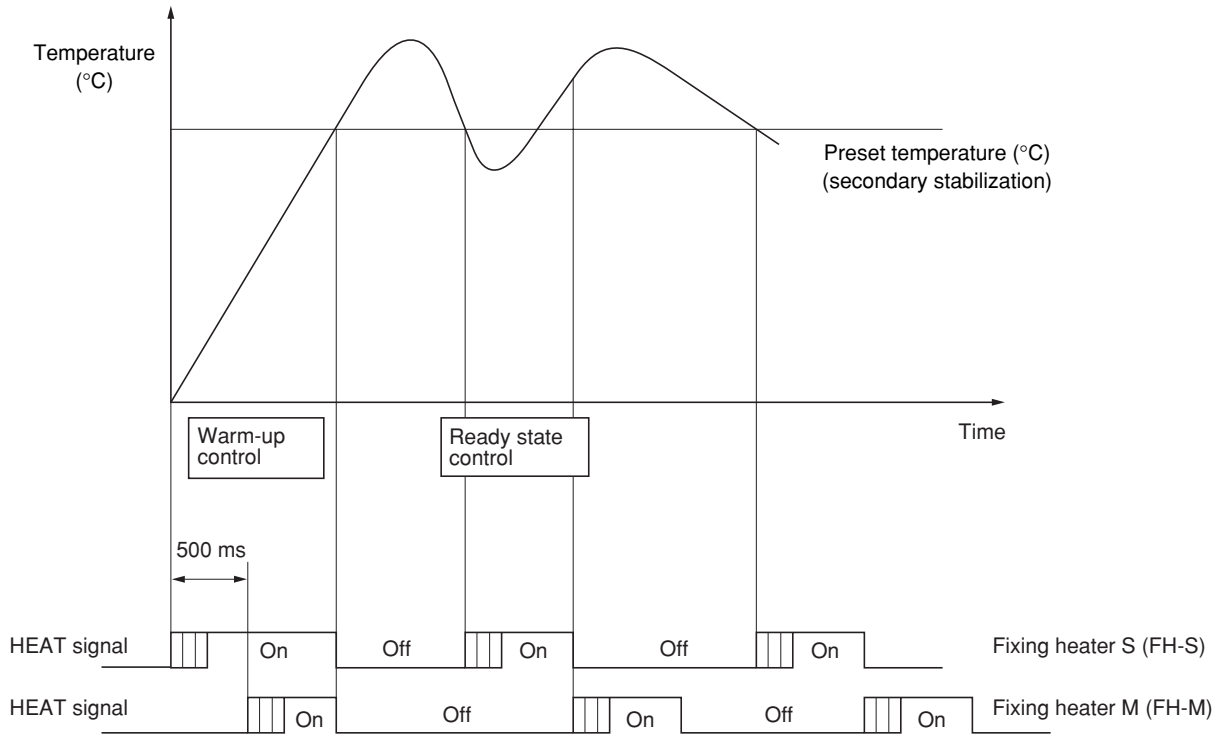

Figure 2-1-19 Fixing temperature system

• Warm-up control
1. 500 ms after the fixing heater S (FH-S) turns on, the fixing heater M (FH-M) turns on.
2. When the fixing temperature reaches preset temperature, both fixing heater S (FH-S) and fixing heater M (FH-M) turn off simultaneously.

• Ready state control
1. When the fixing temperature drops to the preset temperature, fixing heater S (FH-S) turns on, and after specified time, the heater turns off.
2. When fixing heater S (FH-S) turns off, fixing heater M (FH-M) turns on at the same time, and after specified time, the heater turns off.
3. The operation above is repeated to keep the fixing temperature to the preset temperature.

* If a temperature more than or equal to the preset temperature + 20°C/68°F is detected, both fixing heater S (FH-S) and fixing heater M (FH-M) are turned off forcibly.

(2) Fixing temperature control based on ambient temperature
This machine performs fixing temperature control based on the ambient temperature.

Ambient temperature	Fixing temperature (°C)
Lower than 15°C/59°F	Reference value +10
Higher than or equal to 15°C/59°F, lower than 20°C/68°F	Reference value +5
Higher than or equal to 20°C/68°F, lower than 31°C/78.8°F	Reference value
Higher than 31°C/78.8°F	Reference value -5

2-1-7 Exit and switchback sections

The exit and switchback sections exit paper on which fixing has ended with the exit roller that is rotated by forward rotation of the exit motor.
In duplex copying, paper is turned over by reverse rotation of the exit motor.

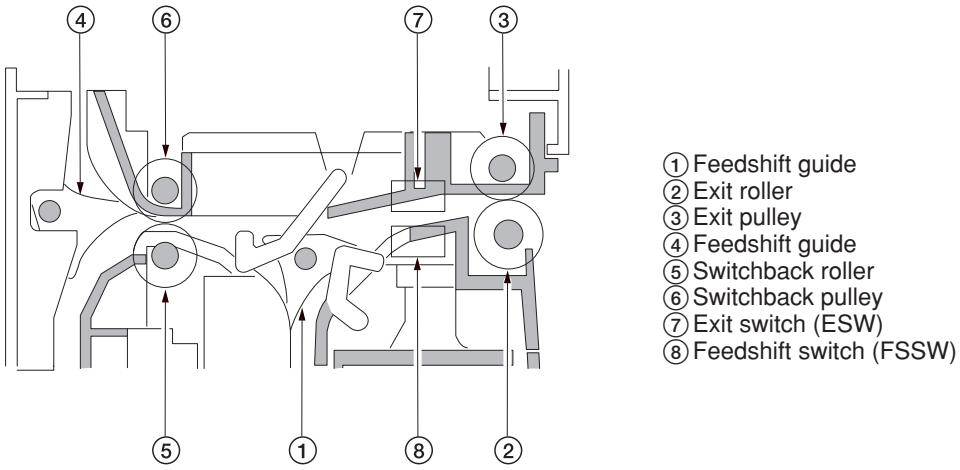

Figure 2-1-20 Exit and switchback sections

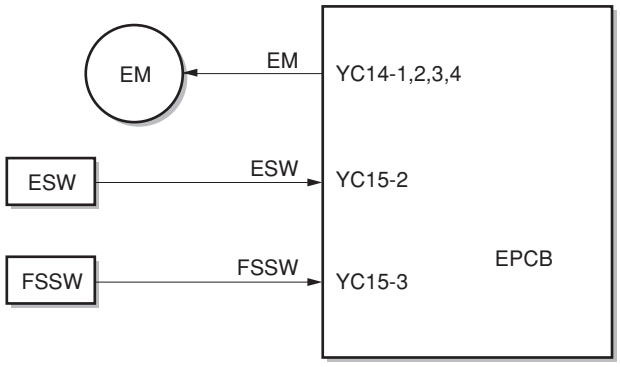

Figure 2-1-21 Exit and switchback sections block diagram

2-1-8 Duplex section

In duplex mode, after copying on to the reverse face of the paper, the paper is reversed in the switchback section and conveyed to the duplex unit. The paper is then conveyed to the copier paper feed section by the upper and lower duplex feed rollers.

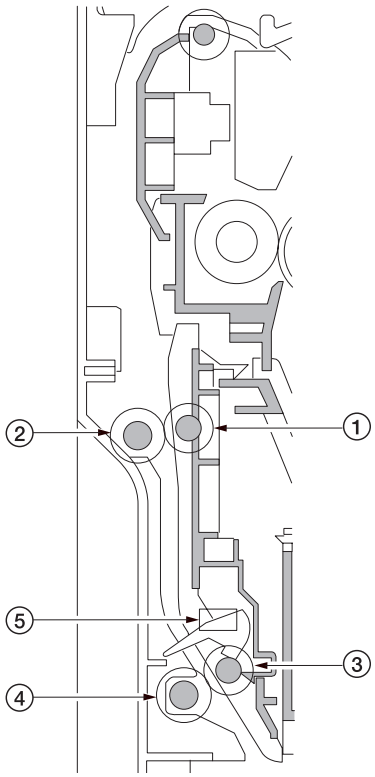

① Duplex feed pulley
② Upper duplex feed roller
③ Duplex feed pulley
④ Lower duplex feed roller
⑤ Duplex paper conveying switch (DPPCSW)

Figure 2-1-22 Duplex section

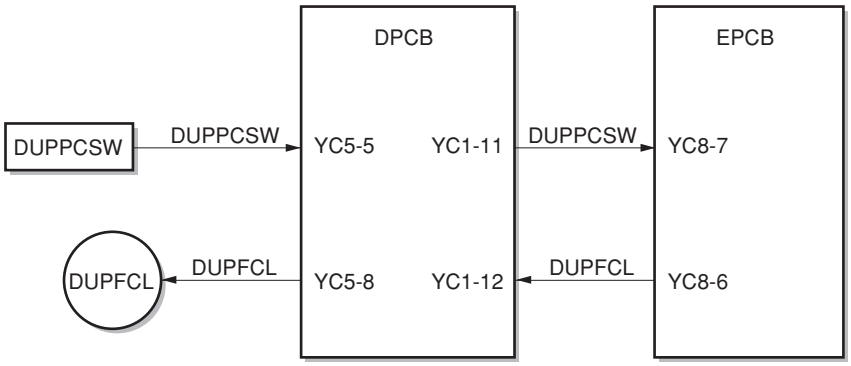

Figure 2-1-23 Duplex section block diagram

(1) Paper conveying operation in duplex copying

Paper of which copying onto the reverse side is complete is conveyed to the switchback section, the exit motor switches from forward rotation to reverse rotation to switch the exit roller to reverse rotation, and the paper conveying direction is reversed. Paper that has been switched back is conveyed to the duplex unit via the exit roller and the switchback roller. Paper that has been conveyed to the duplex unit is conveyed to the paper feed section again by rotation of the upper duplex feed roller and the lower duplex feed roller and copying onto the front side is performed.

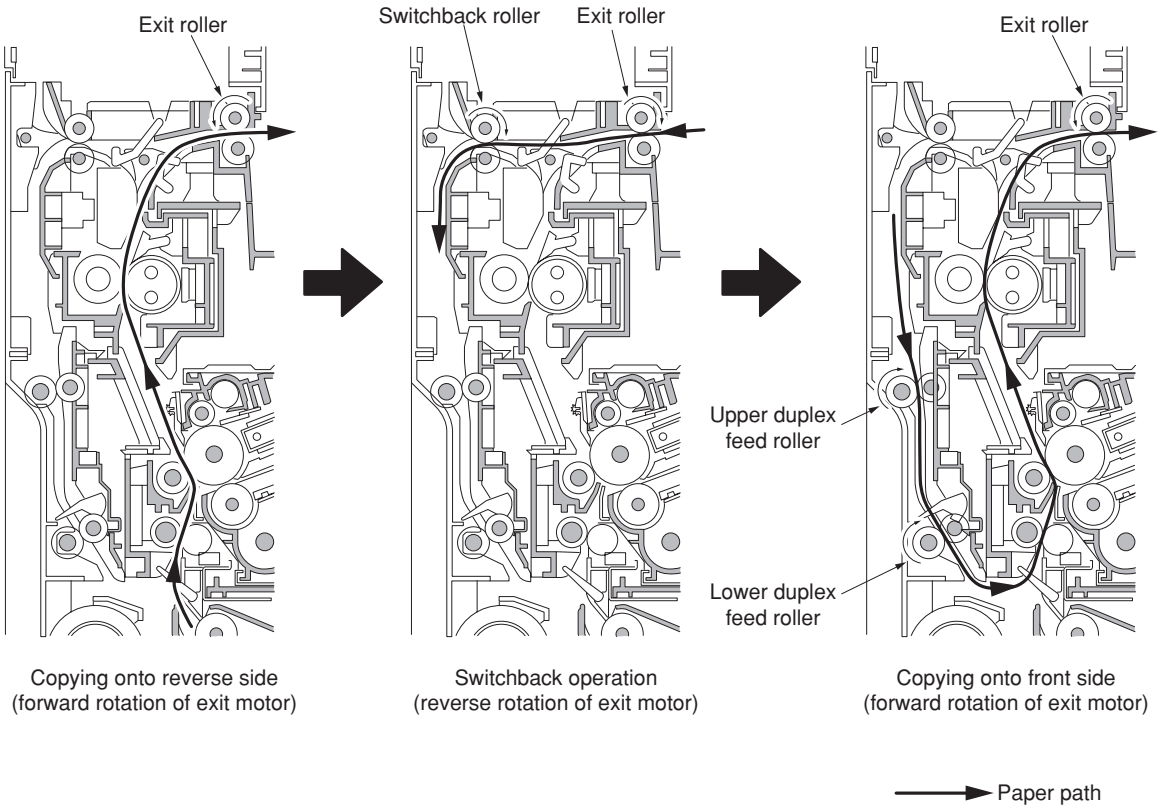

Figure 2-1-24

2-2-1 Electrical parts layout

(1) PCBs

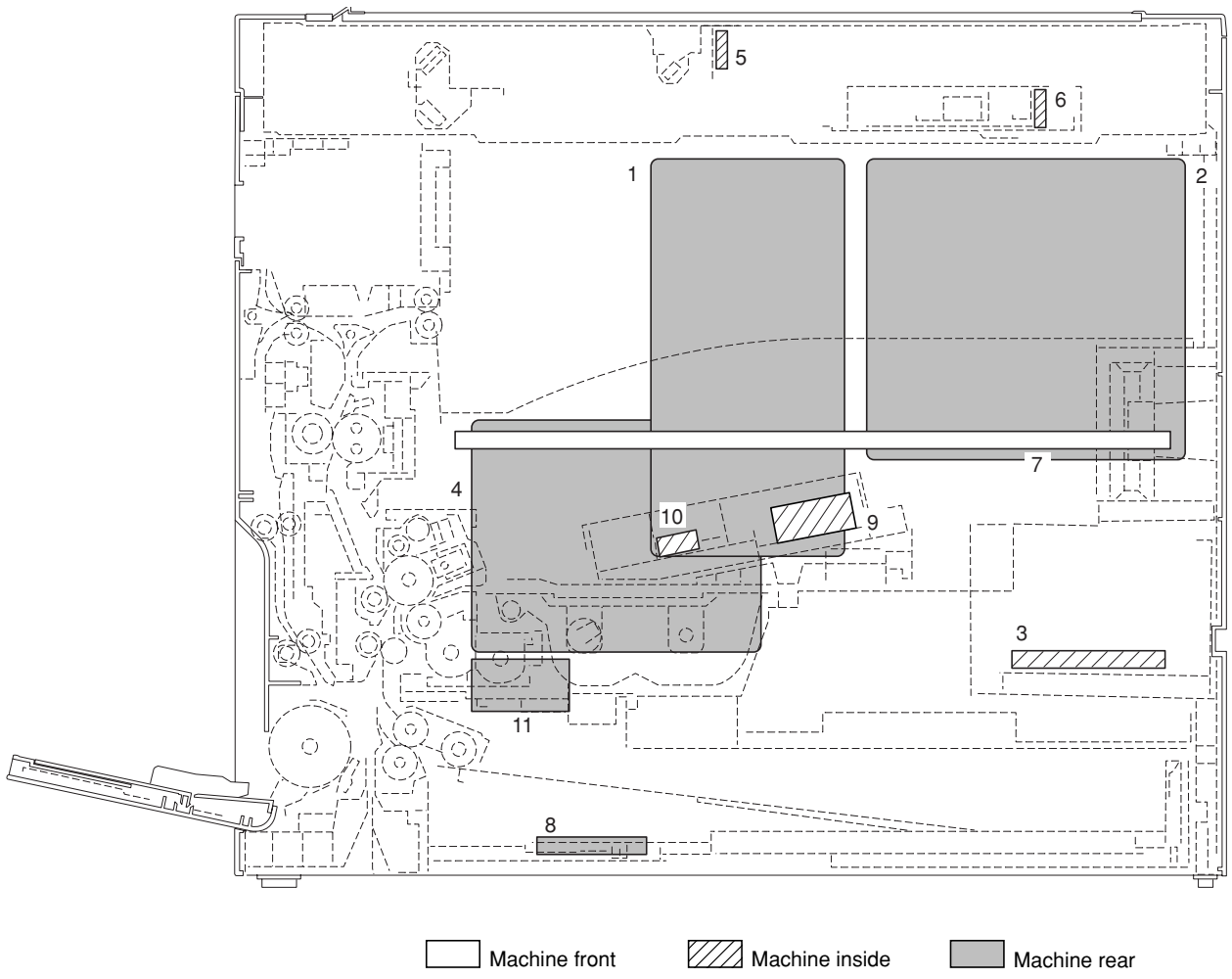

Figure 2-2-1 PCBs

1. Engine PCB (EPCB) ..... Controls the other PCBs, electrical components and optional devices.
2. Main PCB (MPCB) ..... Controls the operation panel and laser scanner unit.
3. Power source PCB (PSPCB) ..... Generates +24 V DC and 5V DC; controls the fixing heater.
4. High-voltage PCB (HVTPCB) ..... Main charging. Generates high voltages for transfer and high voltages for separation.
5. Inverter PCB (INPCB) ..... Controls the exposure lamp.
6. CCD PCB (CCDPCB) ..... Reads the image off originals.
7. Operation unit PCB (OPCB) ..... Consists of the operation keys and display LEDs.
8. Drawer PCB (DPCB) ..... Controls the electrical components.
9. APC PCB (APCPCB) ..... Generates and controls the laser light.
10. PD PCB (PDPCB) ..... Controls horizontal synchronizing timing of laser beam.
11. Registration motor PCB (RMPCB) ..... Controls the registration motor.

(2) Switches and sensors

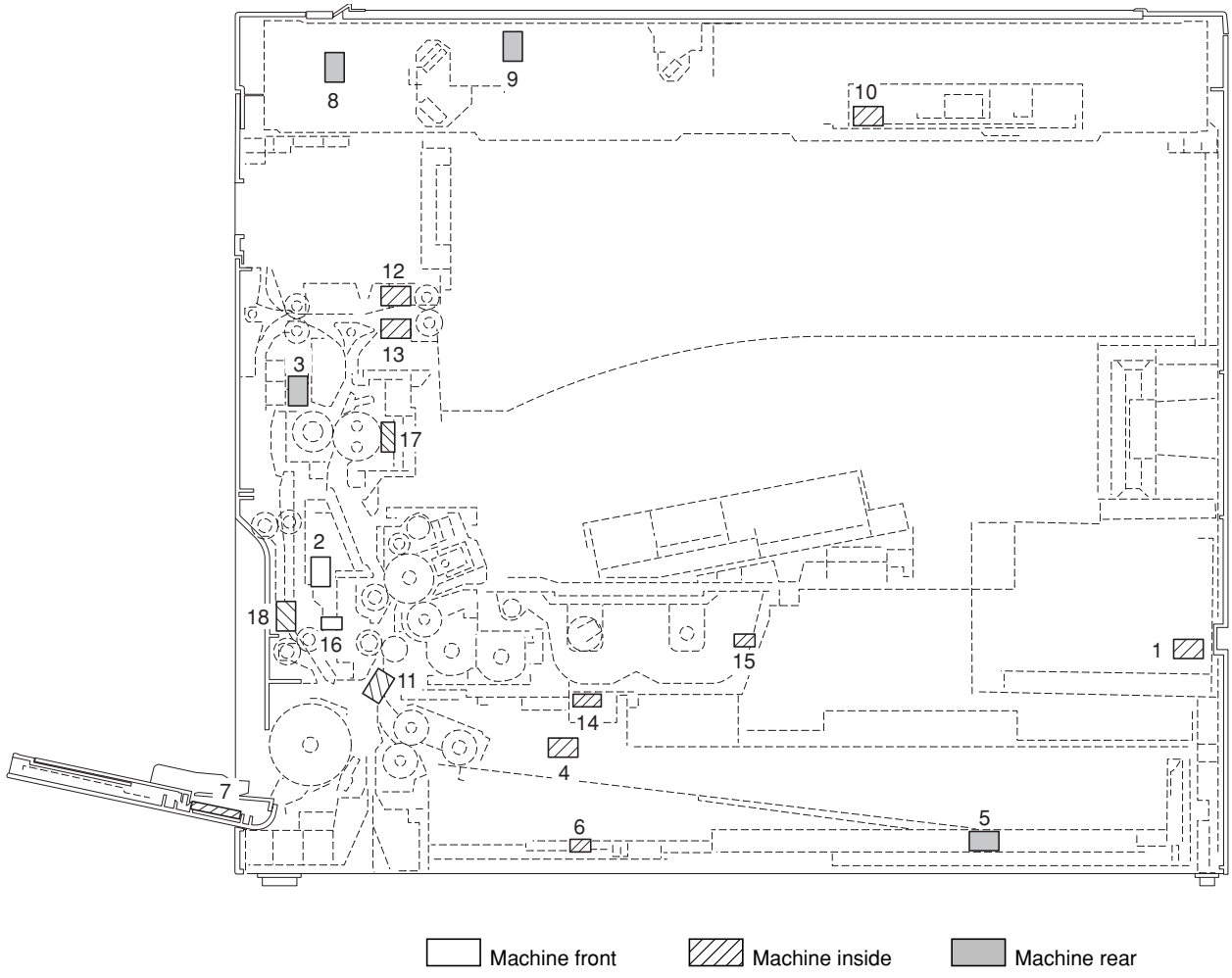

Figure 2-2-2 Switches and sensors

1. Power switch (PSW) ..... Turns the AC power on and off.
2. Front cover safety switch (FCSSW) ..... Breaks the safety circuit when the front cover is opened.
3. Left cover safety switch (LCSSW) ..... Breaks the safety circuit when the left cover is opened.
4. Paper switch (PSW) ..... Detects the presence of paper in the drawer.
5. Paper size length switch (PLSW) ..... Detects the length of paper in the drawer.
6. Paper size width switch (PWSW) ..... Detects the width of paper in the drawer.
7. Bypass paper size width switch (BYPPWSW) ..... Detects the width of paper on the bypass tray.
8. Scanner home position switch (SHPSW) .... Detects the optical system in the home position.
9. Original detection switch (ODSW) ..... Operates the original size detection sensor.
10. Original size detection sensor (OSDS) ..... Detects the size of the original.
11. Registration switch (RSW) ..... Controls the secondary paper feed start timing.
12. Exit switch (ESW) ..... Detects a paper misfeed in the fixing section.
13. Feedshift switch (FSSW) ..... Detects a paper misfeed in the switchback section in a duplex copy.
14. Toner container sensor (TCS) ..... Detects the quantity of toner in a toner container.
15. Toner container detection switch (TCDSW) ..... Detects the presence of the toner container.
16. Overflow sensor (OFS) ..... Detects when the waste toner box is full.
17. Fixing thermistor (FTH) ..... Detects the heat roller temperature.
18. Duplex paper conveying switch (DUPPCSW)* ..... Detects a paper misfeed in the duplex unit.

*: Optional

(3) Motors

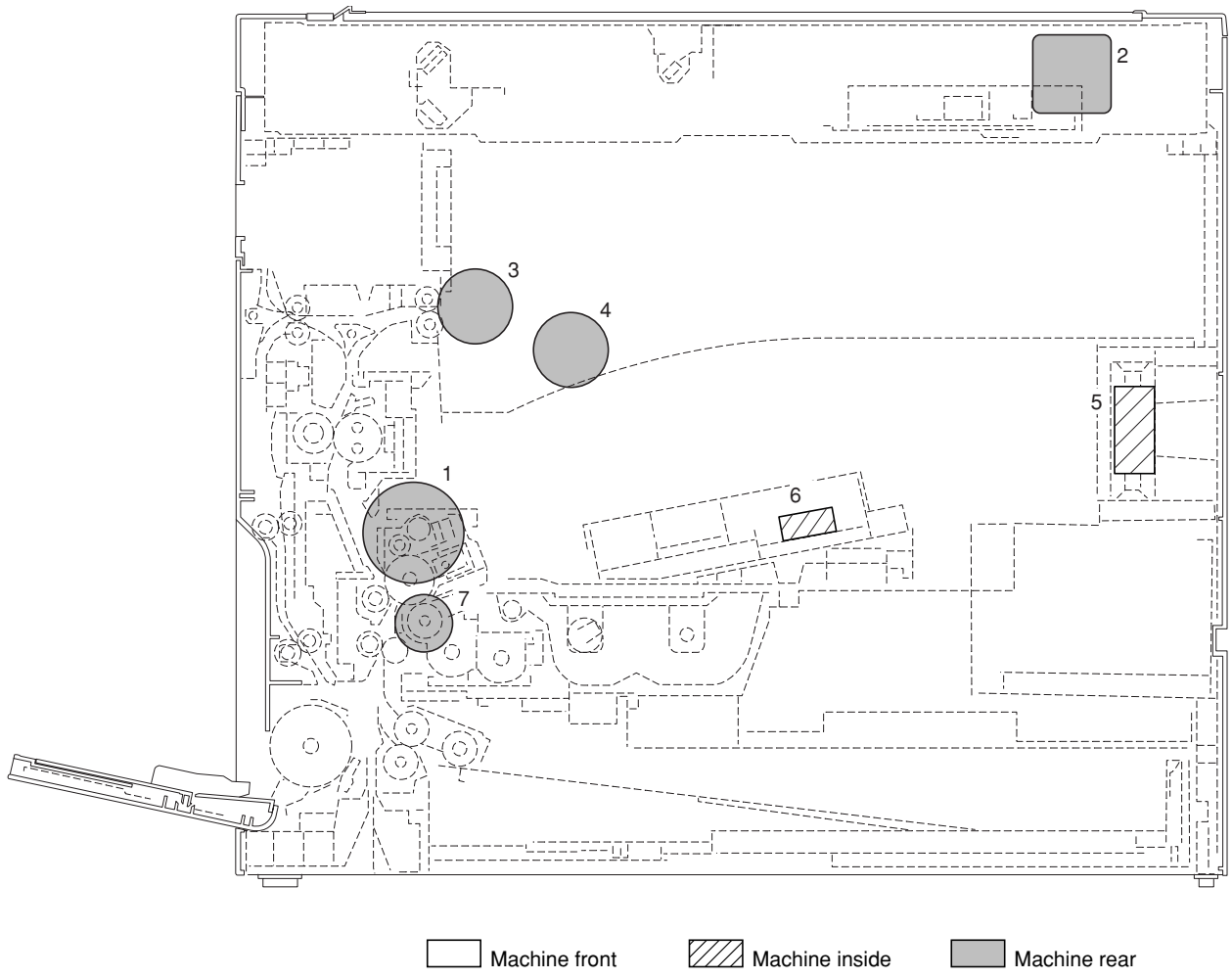

Figure 2-2-3 Motors

1. Drive motor (DM) ..... Drives the machine.
2. Scanner motor (SM) ..... Drives the optical system.
3. Exit motor (EM) ..... Drives the exit section.
4. Cooling fan motor 1 (CFM1) ..... Cools the machine interior.
5. Cooling fan motor 2 (CFM2) ..... Cools the machine interior.
6. Polygon motor (PM) ..... Drives the polygon mirror.
7. Registration motor (RM) ..... Drives the registration roller.

(4) Other electrical components

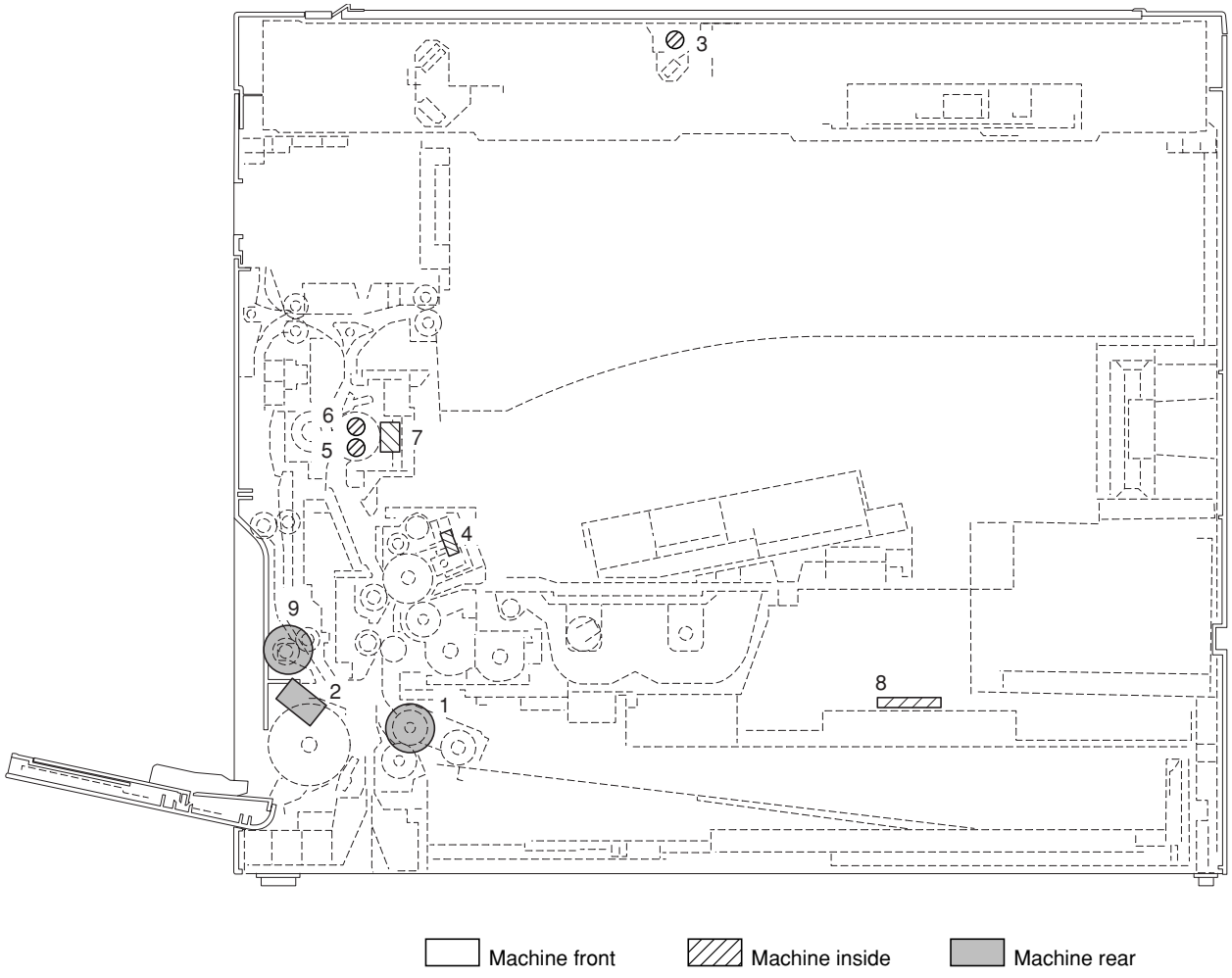

Figure 2-2-4 Other electrical components

1. Paper feed clutch (PFCL) ..... Primary paper feed from the drawer.
2. Bypass paper feed clutch (BYPPFCL) ..... Primary paper feed from the bypass tray.
3. Exposure lamp (EL) ..... Exposes originals.
4. Cleaning lamp (CL) ..... Removes residual charge from the drum surface.
5. Fixing heater M (FH-M) ..... Heats the heat roller.
6. Fixing heater S (FH-S) ..... Heats the heat roller.
7. Fixing thermostat (FTS) ..... Prevents overheating in the fixing section.
8. Drawer heater (DH)* ..... Dehumidifies the drawer section.
9. Duplex feed clutch (DUPFCL)* ..... Controls the drive of the duplex feed roller.

2-3-1 Power source PCB

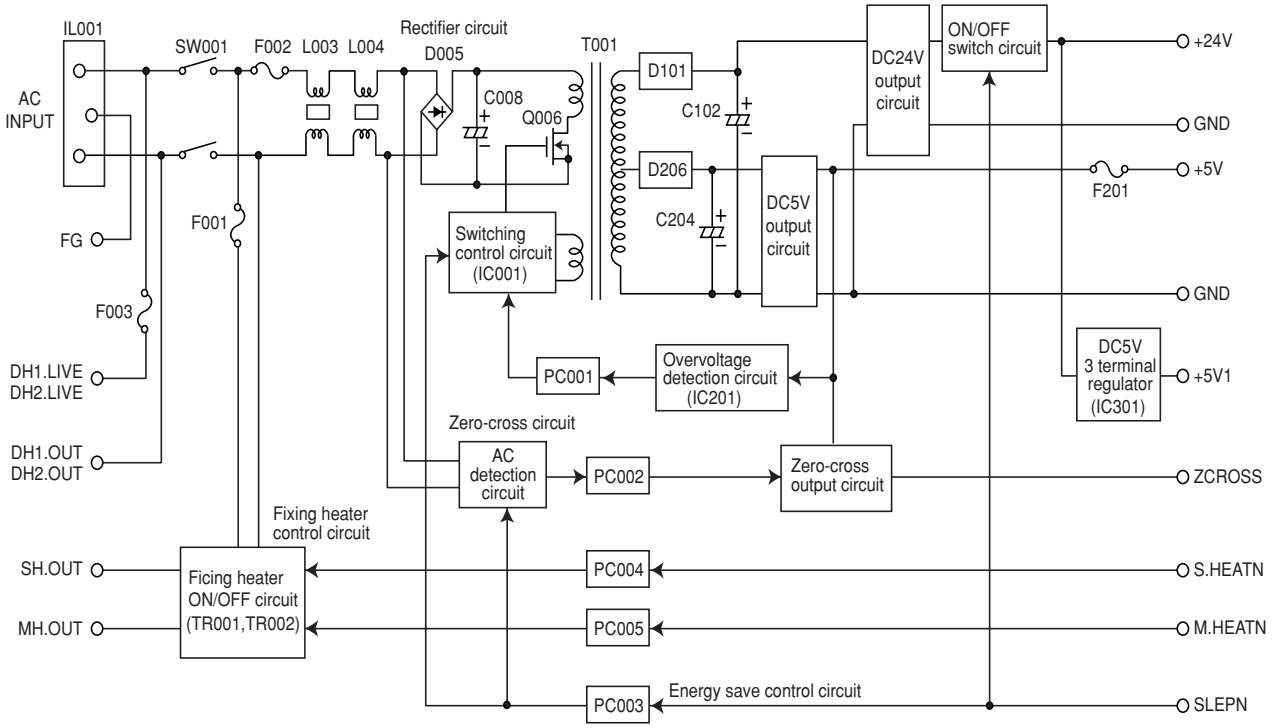

Figure 2-3-1 Power source PCB block diagram

The power source PCB (PSPCB) is a switching regulator that converts an AC input to generate 24 V DC and 5 V DC. It includes a rectifier circuit, a switching regulator circuit, a 24 V DC output circuit, a 5 V DC output circuit, overvoltage detection circuit, zero-cross circuit and a fixing heater control circuit.
The rectifier circuit full-wave rectifies the AC input using the diode bridge D005. The smoothing capacitor (C008) smoothes out the pulsed current from the diode bridge.
In the switching control circuit, PWM controller (IC001) turns the power MOSFET (Q006) on and off to switch the voltage induced in the primary coil of the transformer (T001).
The 5 V DC output circuit rectifies and smoothes the voltage induced in the secondary coil of the transformer (T001) via diodes (D206) and smoothing capacitors (C204), and the output is controlled by the overvoltage detection circuit (IC201). For 5 V DC output, the PWM controller IC (IC001) of the switching control circuit changes the duty of the switching pulse width of the power MOSFET (Q006) via a photo coupler (PC001) based on the output voltage status to adjust the 5 V DC output.
The 24 V DC output circuit rectifies and smoothes the voltage induced in the secondary coil of the transformer (T001) via diodes (D201) and smoothing capacitors (C102), and the output is controlled by the overvoltage detection circuit (IC201).
The zero-cross circuit detects zero-crossing of the AC input voltage with the AC detection circuit and outputs the zero-cross signal (ZCROSS) from the zero-cross output circuit through the photo coupler (PC002).
The fixing heater control circuit is divided into the sub-heater output (SH. OUT) and the main heater output (MH. OUT). When the control signals (S. HEATN and M. HEATN) input from the machine engine side show a low level, this circuit turns on the sub-heater and the main heater respectively by turning on the photo triac couplers (PC004 and PC005) with a zero-cross circuit to turn on the triacs (TR001 and TR002) in the fixing heater ON/OFF circuit.
The power-saving control circuit performs power-saving control by turning off the 24 V DC output in the 24 V DC output ON/OFF switching circuit and controlling the switching control circuit and the AC detection circuit through the photo coupler (PC003) to decrease the switching frequency, stop the starting circuit in the switching control circuit, and stop the AC detection circuit when the sleep signal (SLEPN) input from the machine engine side is low.
In addition, 5 V DC three-terminal Reg is connected to the back of the 24 V DC output ON/OFF switching circuit to output +5 V1, and this output stops when the sleep signal (SLEPN) is low.

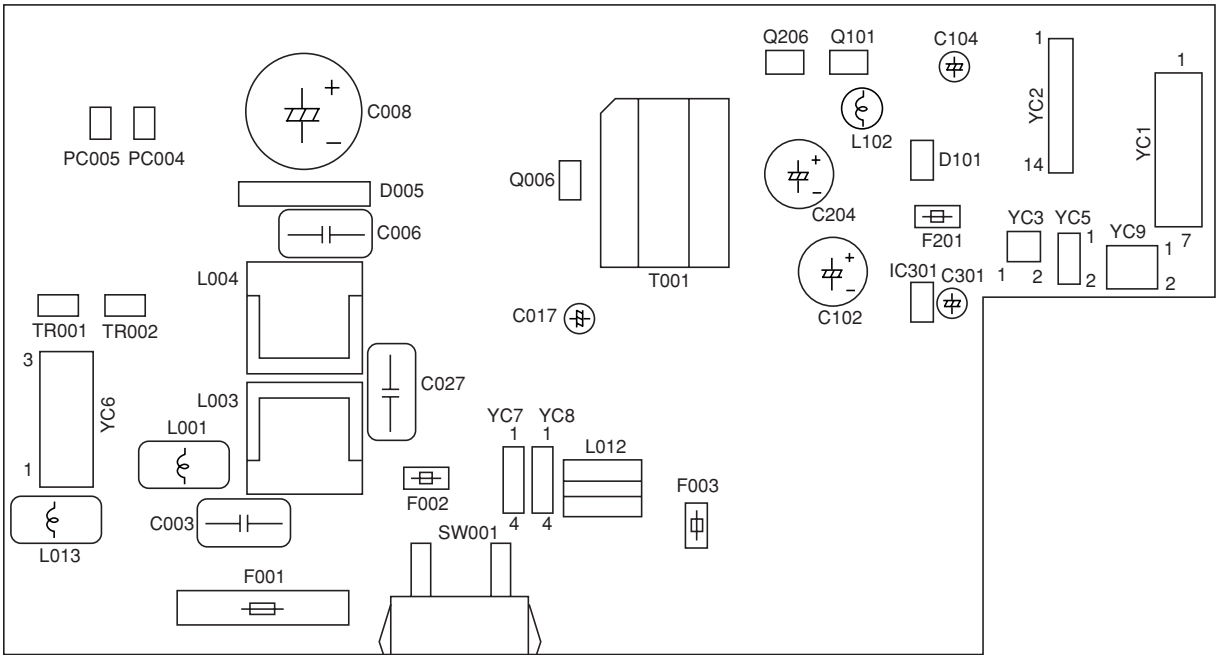

Figure 2-3-2 Power source PCB silk-screen diagram

Connector	Pin No.	Signal	I/O	Description
IL001 Connected to the AC power plug	1	AC-L	I	AC supply (LIVE)
	2	FG	-	Ground
	3	AC-N	I	AC supply (NEUTRAL)
YC1 Connected to the engine PCB and left cover safety switch	1	+24 V1	O	24 V DC power supply for LCSSW
	2	NC	-	Not used
	3	+24 V2	I	24 V DC power supply
	4	+24 V4	O	24 V DC power supply for EPCB
	5	P.GND	-	Ground
	6	S.GND	-	Ground
	7	+5 V	O	5 V DC power supply for EPCB
YC2 Connected to the engine PCB	1	+5 V	O	5 V DC power supply for EPCB
	2	S.GND	-	Ground
	3	+24 V2	I	24 V DC power supply
	4	S.GND	-	Ground
	5	ZCROSS	O	Zero-cross signal
	6	SLEPN	I	Power source sleep signal
	7	S.HEATN	I	FH-S on/off
	8	M.HEATN	I	FH-M on/off
	9	COUNTN	I	Counter control signal
	10	P.GND	-	Ground
	11	P.GND	-	Ground
	12	+24 V1	O	24 V DC power supply for EPCB
	13	+24 V1	O	24 V DC power supply for EPCB
	14	+24 V	O	24 V DC power supply for EPCB

Connector	Pin No.	Signal	I/O	Description
YC5 Connected to the front cover safety switch	1 2 3	+5 V1 NC +5 V3	O - I	5 V DC power supply for FCSSW Not used 5 V DC power supply
YC6 Connected to the fixing heater M/S	1 2 3	H.LIVE MH.OUT MH.OUT	O O O	AC power supply for FH-M/S (LIVE) AC power supply for FH-M AC power supply for FH-S
YC7 Connected to the optional paper feeder	1 2 3 4	DH2.LIVE NC NC DH2.OUT	O - - O	AC power supply for drawer heater of the paper feeder (LIVE) Not used Not used AC power supply for drawer heater of the paper feeder
YC8 Connected to the drawer heater*	1 2 3 4	DH1.LIVE NC NC DH1.OUT	O - - O	AC power supply for drawer heater (LIVE) Not used Not used AC power supply for drawer heater
YC9 Connected to the optional paper feeder	1 2	+24 V4 P.GND	O -	24 V DC power supply for paper feeder Ground

2-3-2 Main PCB

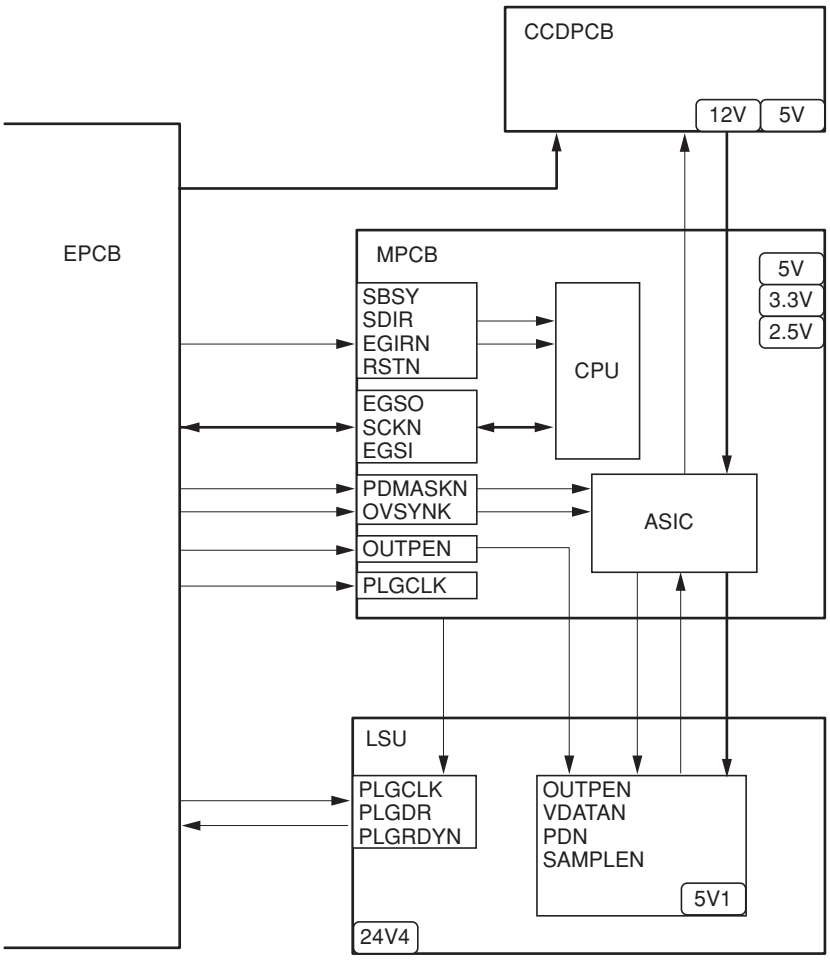

Figure 2-3-3 Main PCB block diagram

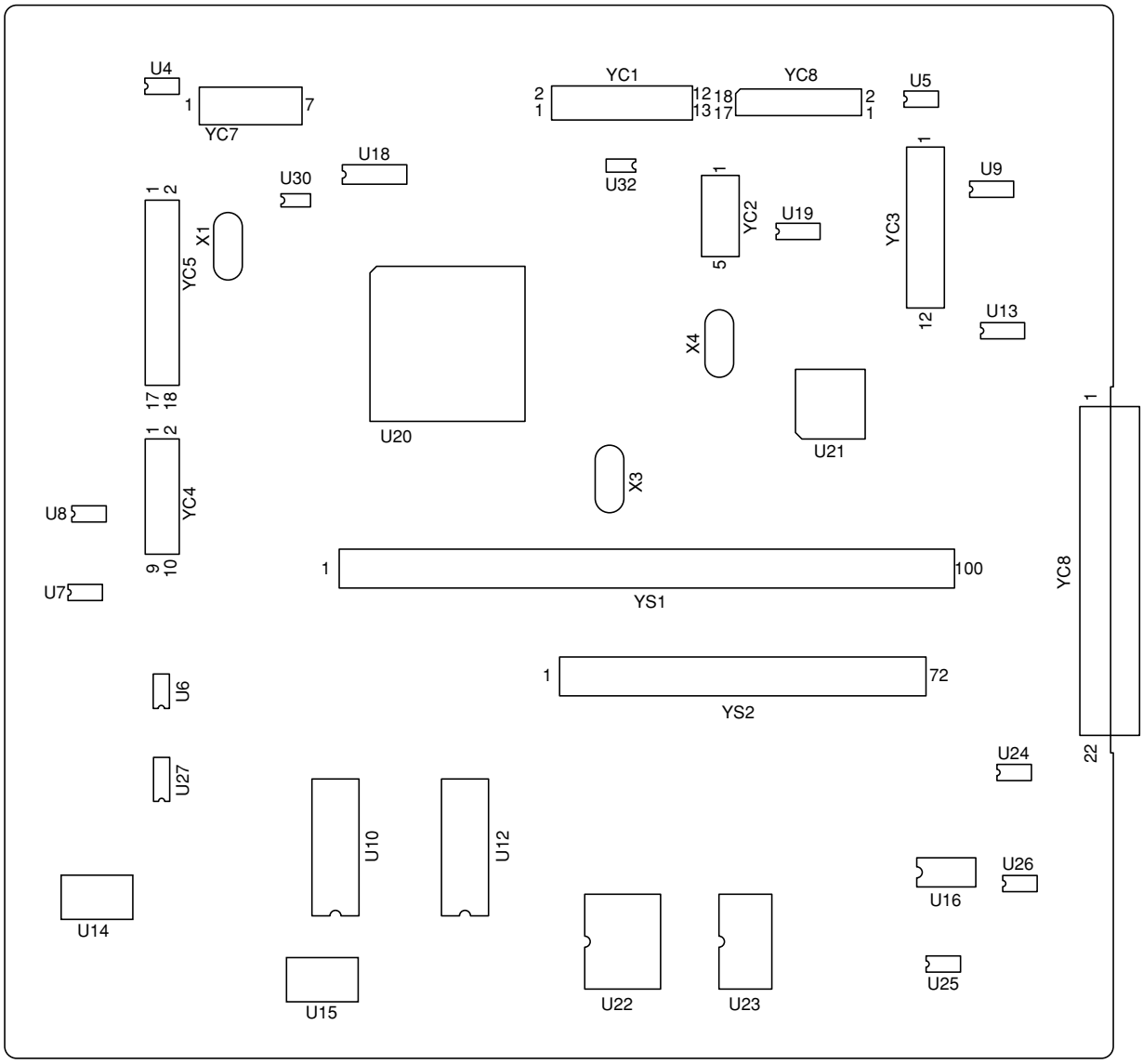

Figure 2-3-4 Main PCB silk-screen diagram

Connector	Pin No.	Signal	I/O	Description
YC4 Connected to the operation unit PCB	1	+5 V	O	5 V DC power supply for OPCB
	2	BUZERDRN	O	OPCB buzer signal
	3	SCAN7N	O	Key switch scan signal 7
	4	SCAN6N	O	Key switch scan signal 6
	5	SCAN5N	O	Key switch scan signal 5
	6	SCAN4N	O	Key switch scan signal 4
	7	SCAN3N	O	Key switch scan signal 3
	8	SCAN2N	O	Key switch scan signal 2
	9	SCAN1N	O	Key switch scan signal 1
	10	SCAN0N	O	Key switch scan signal 0
YC5 Connected to the operation unit PCB	1	LED0	O	LED lighting selection signal 0
	2	LED1	O	LED lighting selection signal 1
	3	LED2	O	LED lighting selection signal 2
	4	LED3	O	LED lighting selection signal 3
	5	LED4	O	LED lighting selection signal 4
	6	LED5	O	LED lighting selection signal 5
	7	LED6	O	LED lighting selection signal 6
	8	LED7	O	LED lighting selection signal 7
	9	LED8	O	LED lighting selection signal 8
	10	LED9	O	LED lighting selection signal 9
	11	LED10	O	LED lighting selection signal 10
	12	LED11	O	LED lighting selection signal 11
	13	LED12	O	LED lighting selection signal 12
	14	KEY0	I	Key switch return signal 0
	15	KEY1	I	Key switch return signal 1
	16	KEY2	I	Key switch return signal 2
	17	KEY3	I	Key switch return signal 3
	18	KEY4	I	Key switch return signal 4
YC6 Connected to the enginge PCB	1	+12 V	I	12 V DC power supply from EPCB
	2	OVSYNC	I	Original scanning interval signal
	3	RSTN	I	Reset signal
	4	EGRN	I	Enginge communication EGRN signal
	5	SDIR	I	Enginge communication SDIR signal
	6	SBSY	I	Enginge communication SBSY signal
	7	PDMASKN	I	Printing image interval signal
	8	EGSI	O	Enginge serial communication transmission
	9	SCKN	O	Enginge communication clock signal
	10	EGSO	I	Enginge serial communication reception
	11	PLGCLK	O	PM clock signal
	12	S.GND	-	Ground
	13	OUTEPN	I	Laser diode output signal
	14	+5 V	I	5 V DC power supply from EPCB
	15	+5 V	I	5 V DC power supply from EPCB
	16	+5 V	I	5 V DC power supply from EPCB
	17	S.GND	-	Ground
	18	S.GND	-	Ground
	19	S.GND	-	Ground
	20	+5 V3	I	5 V DC power supply from EPCB
	21	P.GND	-	Ground
	22	+24 V	I	24 V DC power supply from EPCB
YC7 Connected to the APC PCB	1	PDN	I	Laser sync signal
	2	S.GND	-	Ground
	3	OUTPEN	O	Laser diode output signal
	4	SAMPLEN	O	Laser light signal
	5	VDON	O	Image differential signal (negative)
	6	VDOP	O	Image differential signal (positive)
	7	+5 V3	O	5 V DC power supply for APCPCB

Connector	Pin No.	Signal	I/O	Description
YC8	1	CCDO	I	CCDPCB image scanning signal
Connected to the CCD PCB	2	CCDON	-	Ground
	3	CCDE	I	CCDPCB image scanning signal
	4	CCDEN	-	Ground
	5	+5 V	O	5 V DC power supply for CCDPCB
	6	S.GND	-	Ground
	7	+12 V	O	12 V DC power supply for CCDPCB
	8	S.GND	-	Ground
	9	CCDCLK	O	CCDCLK signal
	10	S.GND	-	Ground
	11	CCDCLKN	O	CCDCLKN signal
	12	S.GND	-	Ground
	13	RS	O	CCDPCB RS signal
	14	S.GND	-	Ground
	15	CP	O	CCDPCB CP signal
	16	S.GND	-	Ground
	17	SH	O	CCDPCB SH signal
	18	S.GND	-	Ground

2-3-3 Engine PCB

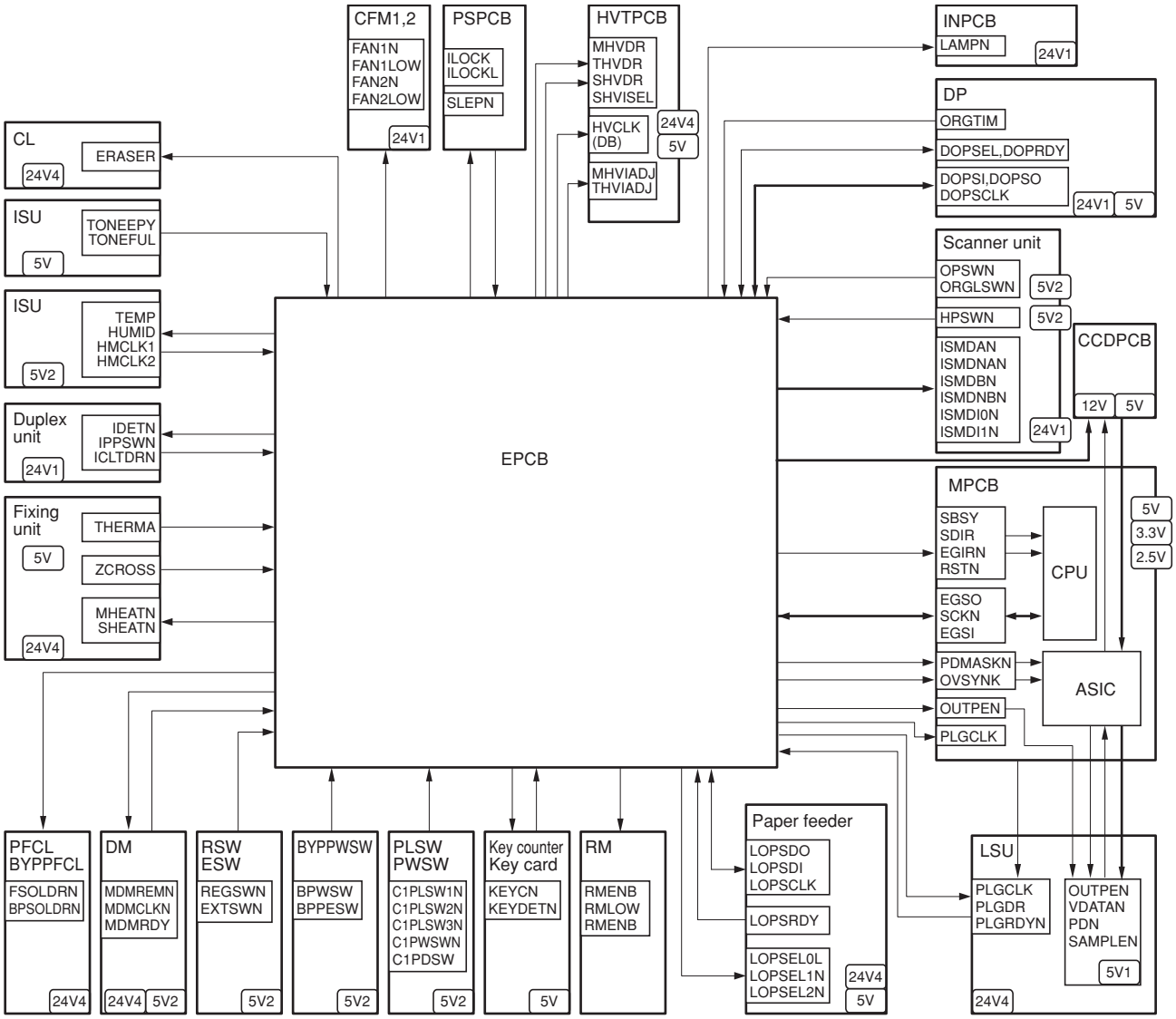

Figure 2-3-3 Engine PCB block diagram

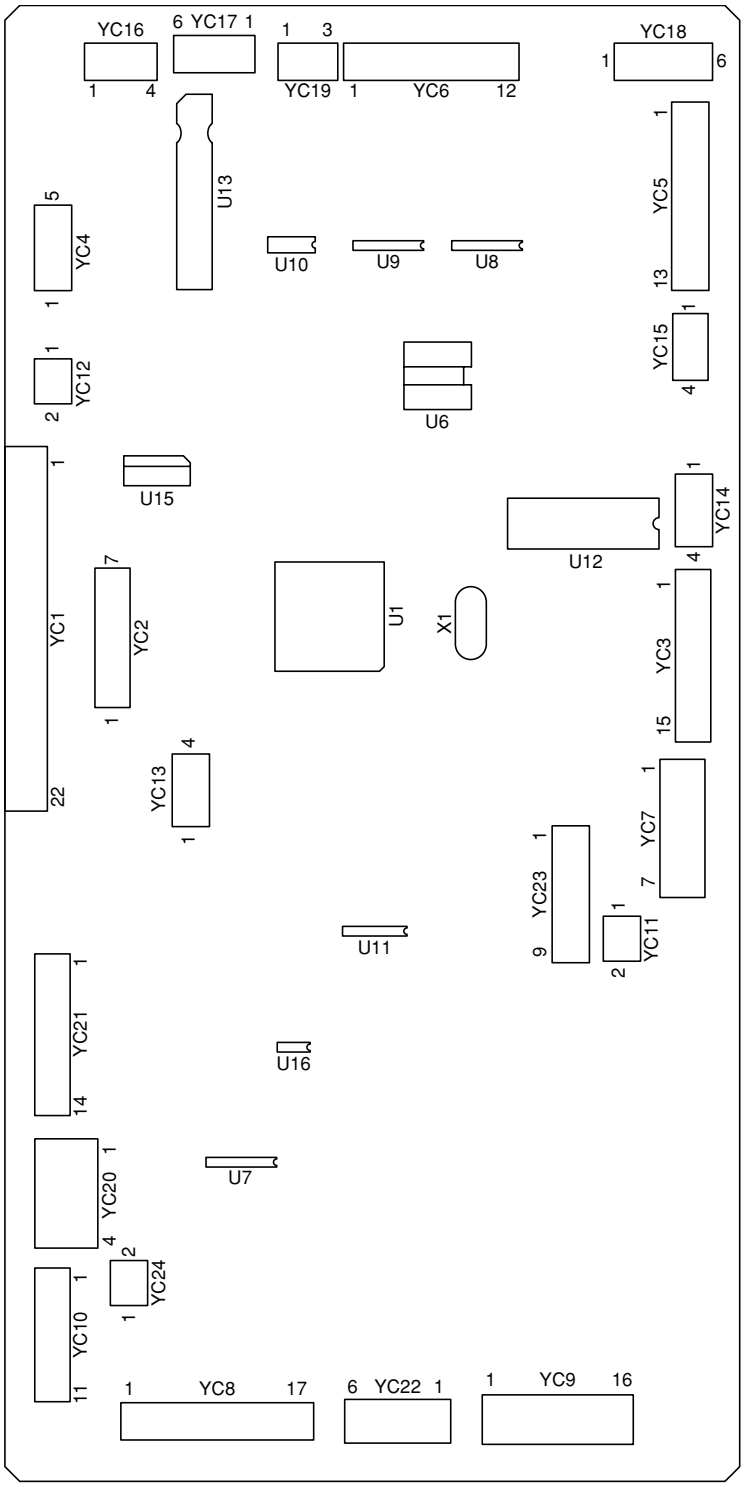

Figure 2-3-4 Engine PCB silk-screen diagram

Connector	Pin No.	Signal	I/O	Description
YC1	1	+12 V	O	12 V DC power supply for MPCB
Connected to the Main PCB	2	OVSYNC	O	Original scanning interval signal
	3	RSTN	O	Reset signal
	4	EGRN	O	Enginge communication EGRN signal
	5	SDIR	O	Enginge communication SDIR signal
	6	SBSY	O	Enginge communication SBSY signal
	7	PDMASKN	O	Printing image interval signal
	8	EGSI	I	Enginge serial communication reception
	9	SCKN	I	Enginge communication clock signal
	10	EGSO	O	Enginge serial communication transmission
	11	PLGCLK	I	PM clock signal
	12	S.GND	-	Ground
	13	OUTEPN	O	Laser diode output signal
	14	+5 V	O	5 V DC power supply for MPCB
	15	+5 V	O	5 V DC power supply for MPCB
	16	+5 V	O	5 V DC power supply for MPCB
	17	S.GND	-	Ground
	18	S.GND	-	Ground
	19	S.GND	-	Ground
	20	+5 V3	O	5 V DC power supply for APCPCB/PDPCB
	21	P.GND	-	Ground
	22	+24 V	O	24 V DC power supply for MPCB
YC2	1	PLGCLKN	O	PM clock signal
Connected to the polygon motor, cleaning lamp, cooling fan motor 1, fixing thermister and overflow sensor	2	PLGRDYN	I	PM rotation sync signal
	3	PLGDRN	O	PM on/off
	4	PLGGND	-	Ground
	5	PLG +24 V4	O	24 V DC power supply for PM
	6	ERASE +24 V4	O	24 V DC power supply for CL
	7	ERASE2N	O	CL on/off (2)
	8	ERASE1N	O	CL on/off (1)
	9	FAN1DRN	O	CFM1 on/off
	10	+24V1	O	24 V DC power supply for CFM1
	11	THERMA +5 V	O	5 V DC power supply for FTH
	12	THERMA	I	FTH analog signal
	13	TONEGND	-	Ground
	14	TONEFUL	I	OFS on/off
	15	TONE +5 V2	O	5 V DC power supply for OFS
YC4	1	+5 V	O	5 V DC power supply for RM
Connected to the registration motor PCB	2	RMLOW	O	RM Low signal
	3	RMCLK	O	Rm clock signal
	4	RMENB	O	RM on/off
	5	S.GND	-	Ground
YC6	1	ORGTIMN	I	DP original scanning interval signal
Connected to the optional DP	2	DOPRDY	I	DP READY signal
	3	DOPSEL	O	DP SEL signal
	4	S.GND	-	Ground
	5	DOPCLK	O	DP clock signal
	6	DOPSDI	I	DP serial communication reception
	7	DOPSDO	O	DP serial communication transmission
	8	+5 V4	O	5 V DC power supply for DP
	9	P.GND	-	Ground
	10	P.GND	-	Ground
	11	+24V1	O	24 V DC power supply for DP
	12	+24V1	O	24 V DC power supply for DP

Connector	Pin No.	Signal	I/O	Description
YC7 Connected to the drive motor	1	+24V4	O	24 V DC power supply for DM
	2	P.GND	-	Ground
	3	S.GND	-	Ground
	4	+5 V	O	5 V DC power supply for DM
	5	REM	O	DM on/off
	6	RDY	I	DM rotation sync signal
	7	CLK	O	DM clock signal
YC8 Connected to the drawer PCB	1	BPPESW	I	BYPPSW on/off
	2	C1PDSWN	I	PSW on/off
	3	FCLTN	O	PFCL on/off
	4	+24V1	O	24 V DC power supply for DPCB
	5	BPSOLN	O	BYPPFCL on/off
	6	ICLTN	O	DUPFCL on/off
	7	IPPSWN	I	DUPPCSW on/off
	8	BPWSW	I	BYPPWSW on/off
	9	REGSWN	I	RSW on/off
	10	TONEPY	I	TCS on/off
	11	S.GND	-	Ground
	12	+5 V2	O	5 V DC power supply for DPCB
	13	C1PWSWN	I	PWSW on/off
	14	HUMIDC	I	HUMSENS analog signal
	15	HMCLK2	O	HUMSENS clock signal (2)
	16	HMCLK1	O	HUMSENS clock signal (1)
	17	TEMP	I	HUMSENS analog signal
YC9 Connected to the high-voltage PCB	1	HVCLK	O	Developing bias clock signal
	2	+5 V	O	5 V DC power supply for HVTPCB
	3	SHVISELN	O	Separation high-voltage switch siganl
	4	P.GND	-	Ground
	5	MHVDRN	O	Main charging high-voltage on/off
	6	P.GND	-	Ground
	7	SHVDRN	O	Separation high-voltage on/off
	8	P.GND	-	Ground
	9	MHVADJ	O	Main charging high-voltage adjust siganl
	10	P.GND	-	Ground
	11	THVDRN	O	Transfer high-voltage on/off
	12	+24 V4	O	24 V DC power supply for HVTPCB
	13	THVADJ	O	Transfer high-voltage adjust siganl
	14	+24 V4	O	24 V DC power supply for HVTPCB
	15	P.GND	-	Ground
	16	+24 V4	O	24 V DC power supply for HVTPCB
YC10 Connected to the optional paper feeder	1	LOPSRDY	I	Paper feeder READY signal
	2	LOPSEL2	O	Paper feeder SEL2 signal
	3	LOPSEL1	O	Paper feeder SEL1 signal
	4	LOPSEL0	O	Paper feeder SEL0 signal
	5	LOPSCLK	O	Paper feeder clock signal
	6	LOPSDI	I	Paper feeder serial communication reception
	7	LOPSDO	O	Paper feeder serial communication transmission
	8	S.GND	-	Ground
	9	+5 V2	O	5 V DC power supply for the paper feeder
	10	S.GND	-	Ground
	11	+5 V2	O	5 V DC power supply for the paper feeder
YC11 Connected to the cooling fan motor 2	1	+24 V4	O	24 V DC power supply for CFM2
	2	FAN2DRN	O	CFM on/off

Connector	Pin No.	Signal	I/O	Description
YC13 Connected to the key counter	1 2 3 4	+24 V1 KEYCN S.GND KEYENBN	O O - I	24 V DC power supply for key counter Key counter count signal Ground Key counter set signal
YC14 Connected to the exit motor	1 2 3 4	COMDA COMDNB COMDNA COMDB	O O O O	EM control signal (A) EM control signal (_B) EM control signal (_A) EM control signal (B)
YC15 Connect to the exit switch and feedshift switch	1 2 3 4	P.GND EXTSMN SEPSWN +5 V2	- I I O	Ground ESW on/off FSSW on/off 5 V DC power supply for ESW/FSSW
YC16 Connected to the scanner motor	1 2 3 4	ISMDA ISMDNB ISMDNA ISMDB	O O O O	SM control signal (A) SM control signal (_B) SM control signal (_A) SM control signal (B)
YC17 Connected to the inverter PCB	1 2 3 4 5 6	LAMPN P.GND +24 V1 +24 V1 P.GND LAMPN	O - O O - O	EL on/off Ground 24 V DC power supply for inverter PCB 24 V DC power supply for inverter PCB Ground EL on/off
YC18 Connected to the original detection switch and scanner home position switch	1 2 3 4 5 6	+5 V2 HPSWN S.GND +5 V2 OPSWN S.GND	O I - O I -	5 V DC power supply for SHPSW SHPSW on/off Ground 5 V DC power supply for ODSW ODSW on/off Ground
YC19 Connected to the original size detection sensor	1 2 3	+5 V2 ORGLSWN S.GND	O I -	5 V DC power supply for OSDS OSDS on/off Ground
YC20 Connected to the power source PCB	1 2 3 4	+5 V S.GND P.GND +24 V2	I - - I	5 V DC power supply from PSPCB Ground Ground 24 V DC power supply from PSPCB
YC21 Connected to the power source PCB	1 2 3 4 5 6 7 8	+24 V +24 V1 +24 V1 P.GND P.GND COUNTN MHEATN SHEATN	I I I - - - O O	24 V DC power supply from PSPCB 24 V DC power supply from PSPCB 24 V DC power supply from PSPCB Ground Ground Not used FH-M on/off FH-S on/off

Connector	Pin No.	Signal	I/O	Description
YC21 Connected to the power source PCB	9	SLEPN	O	Power source sleep signal
	10	ZCROSS	O	Zero-cross signal
	11	S.GND	-	Ground
	12	+24 V2	I	LCSSW on/off
	13	S.GND	-	Ground
	14	+5 V3	I	FCSSW on/off
YC22 Connected to the paper size length switch and toner container detection switch	1	C1PLSW3N	I	PLSW on/off
	2	C1PLSW2N	I	PLSW on/off
	3	S.GND	-	Ground
	4	C1PLSW1N	I	PLSW on/off
	5	TCONDET	I	TCDSW on/off
	6	S.GND	-	Ground
YC24 Connected to the registration motor PCB	1	+24 V4	O	24 V DC power supply for RMPCB
	2	S.GND	-	Ground
	29	GND	-	Ground

2-3-4 Operation unit PCB

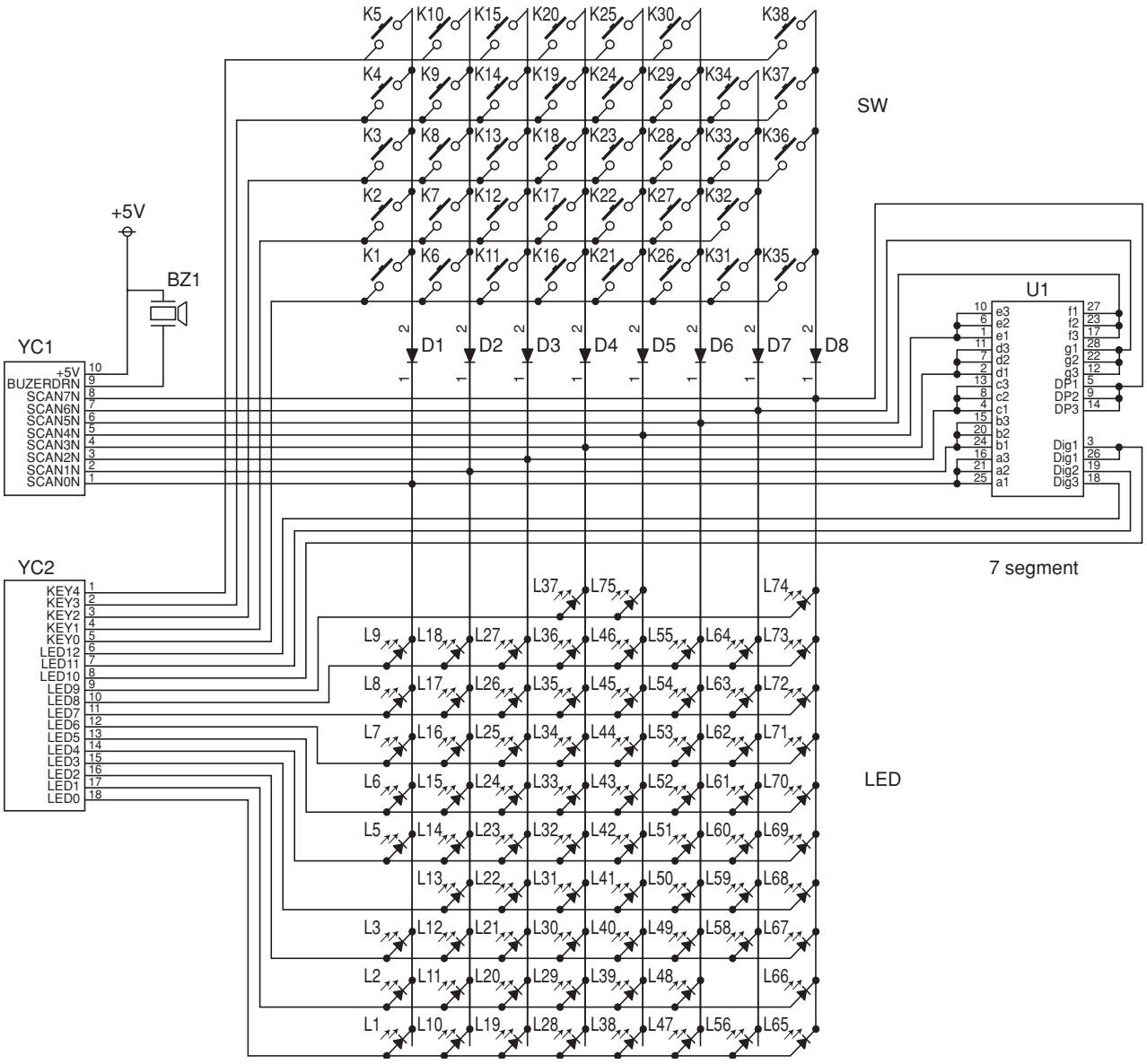

Figure 2-3-7 Operation unit PCB block diagram

The operation unit PCB (OPPCB) consists of key switches, LEDs, 7 segment LED and buzer. The lighting of LEDs is determined by scan signals (SCAN0 to SCAN7) and LED lighting selection signals (LED0 to LED12) from the main PCB (MPCB). The key switches operated are identified by the scan signals (SCAN0 to SCAN7) and the return signals (KEY0 to KEY4).

As an example, to light L1, the LED lighting selection signal (LED0) should be driven low in synchronization with a low level on the scan signal (SCAN0). LEDs can be lit dynamically by repeating such operations.

As another example, if K1 is pressed, the corresponding key switch is turned on feeding the low level of the scan signal (SCAN0) back to the main PCB (MPCB) via the return signal (KEY0). The main PCB (MPCB) locates the position where the line outputting the scan signal and the line inputting the return signal cross, and thereby determines which key switch was operated.

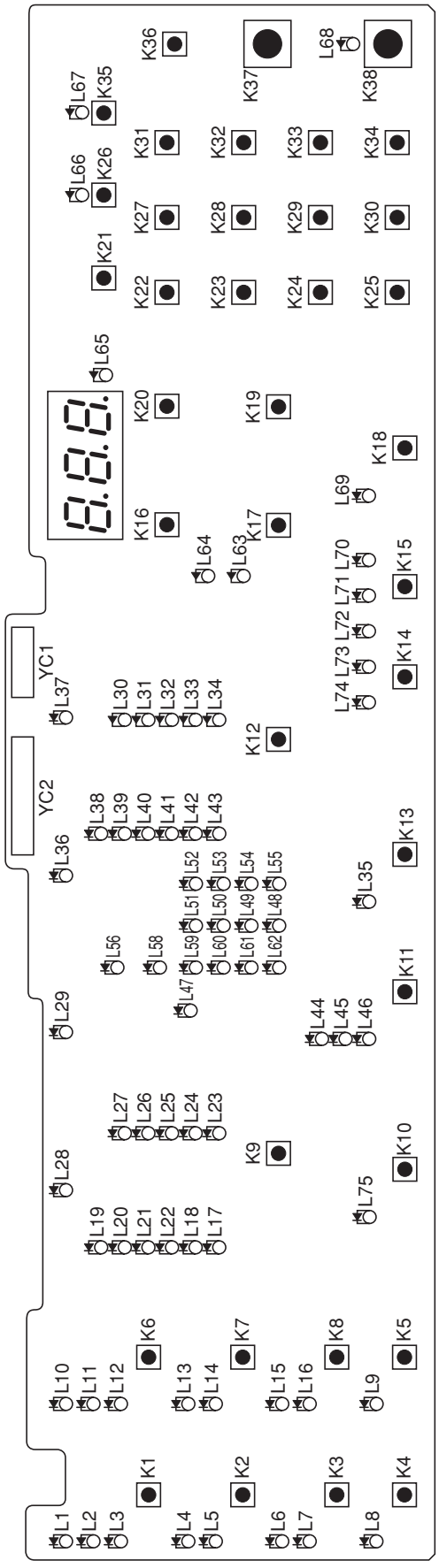

Figure 2-3-8 Operation unit PCB silk-screen diagram

Connector	Pin No.	Signal	I/O	Description
YC1 Connected to the main PCB	1	SCAN0N	I	Key switch scan signal 0
	2	SCAN1N	I	Key switch scan signal 1
	3	SCAN2N	I	Key switch scan signal 2
	4	SCAN3N	I	Key switch scan signal 3
	5	SCAN4N	I	Key switch scan signal 4
	6	SCAN5N	I	Key switch scan signal 5
	7	SCAN6N	I	Key switch scan signal 6
	8	SCAN7N	I	Key switch scan signal 7
	9	BUZERDRN	I	OPCB buzer signal
	10	+5 V	I	5 V DC power supply from MPCB
YC2 Connected to the main PCB	1	KEY4	O	Key switch return signal 4
	2	KEY3	O	Key switch return signal 3
	3	KEY2	O	Key switch return signal 2
	4	KEY1	O	Key switch return signal 1
	5	KEY0	O	Key switch return signal 0
	6	LED12	I	LED lighting selection signal 12
	7	LED11	I	LED lighting selection signal 11
	8	LED10	I	LED lighting selection signal 10
	9	LED9	I	LED lighting selection signal 9
	10	LED8	I	LED lighting selection signal 8
	11	LED7	I	LED lighting selection signal 7
	12	LED6	I	LED lighting selection signal 6
	13	LED5	I	LED lighting selection signal 5
	14	LED4	I	LED lighting selection signal 4
	15	LED3	I	LED lighting selection signal 3
	16	LED2	I	LED lighting selection signal 2
	17	LED1	I	LED lighting selection signal 1
	18	LED0	I	LED lighting selection signal 0

2-3-5 CCD PCB

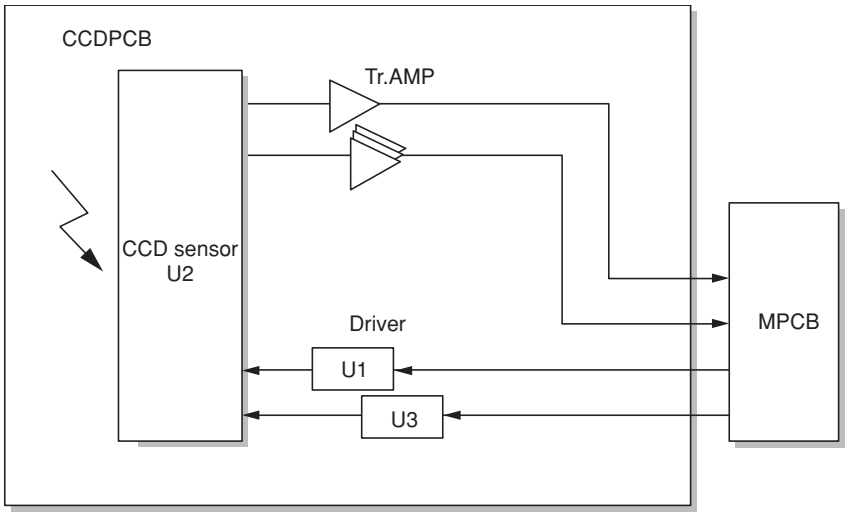

Figure 2-3-9 CCD PCB block diagram

The CCD PCB (CCDPCB) is equipped with a CCD sensor (U2) for original scanning.
The clock signals for driving the CCD sensor (U2) are sent from the main PCB (MPCB), and then input to the CCD sensor (U2) via the clock driver (U1 and U3).
Image signals are analog signals. Even- and odd-numbered pixels are output separately. These analog image signals are amplified in the transistors (TR1 to 4) and then transmitted to the analog signal processing circuit in the main PCB (MPCB).

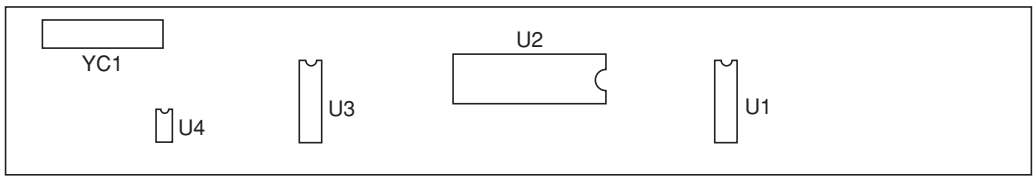

Figure 2-3-10 CCD PCB silk-screen diagram

Connector	Pin No.	Signal	I/O	Description
YC1	1	S.GND	-	Ground
Connected to the main PCB	2	SH	I	MPCB SH signal
	3	S.GND	-	Ground
	4	CP	I	MPCB CP signal
	5	S.GND	-	Ground
	6	RS	I	MPCB RS signal
	7	S.GND	-	Ground
	8	CCDCLKN	I	CCDCLKN signal
	9	S.GND	-	Ground
	10	CCDCLK	I	CCDCLK signal
	11	S.GND	-	Ground
	12	+12 V	I	12 V DC power supply from MPCB
	13	S.GND	-	Ground
	14	+5 V	I	5 V DC power supply from MPCB
	15	CCDEN	-	Ground
	16	CCDE	O	CCDPCB image scanning signal
	17	CCDON	-	Ground
	18	CCDO	O	CCDPCB image scanning signal

Timing chart No. 1 Paper feed from drawer, single-side mode, original size A4/11" × 8 1/2", two sheets

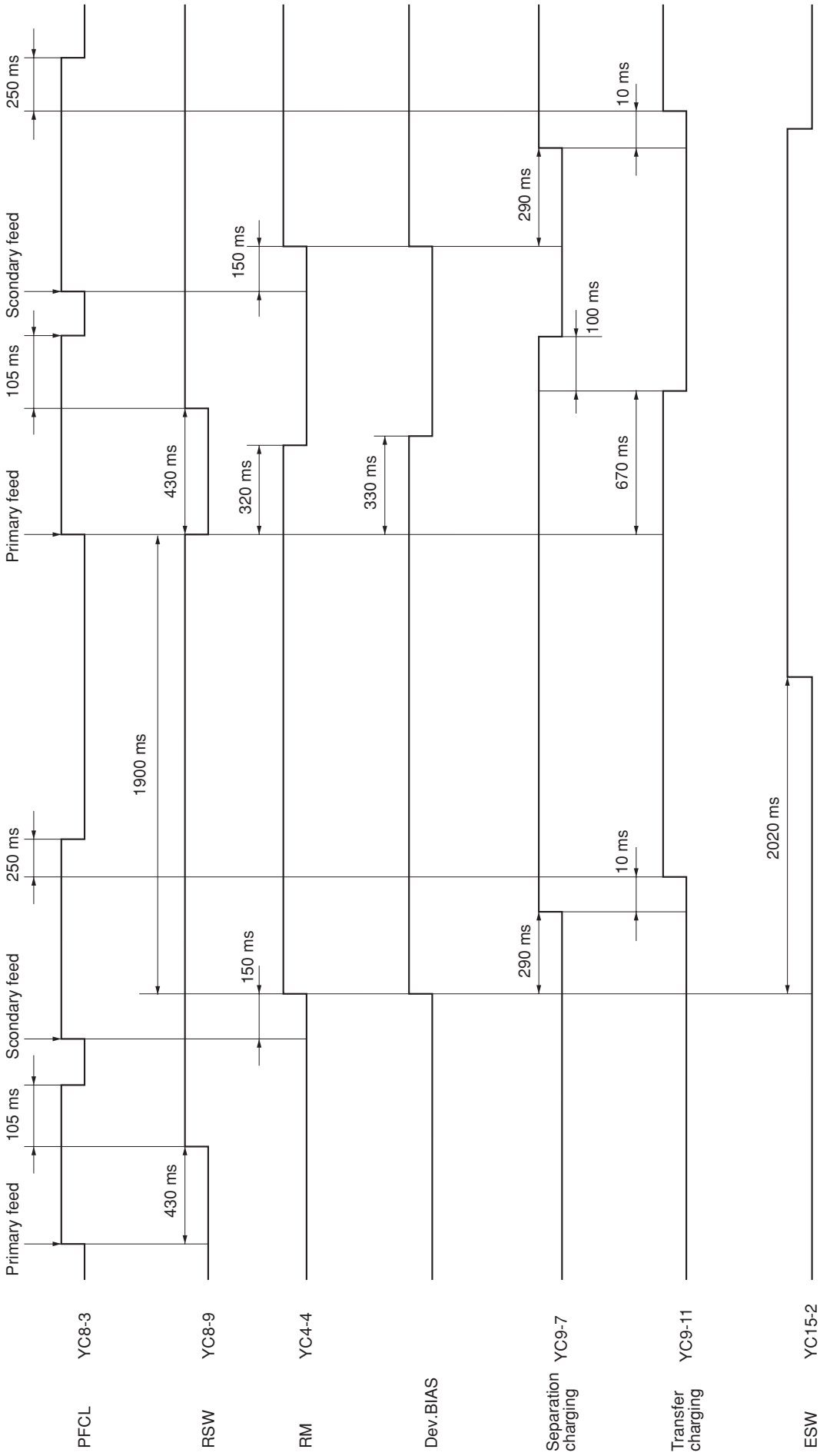

Timing chart No. 2 Paper feed from drawer, single-side mode, original size A3/11" × 17", two sheets

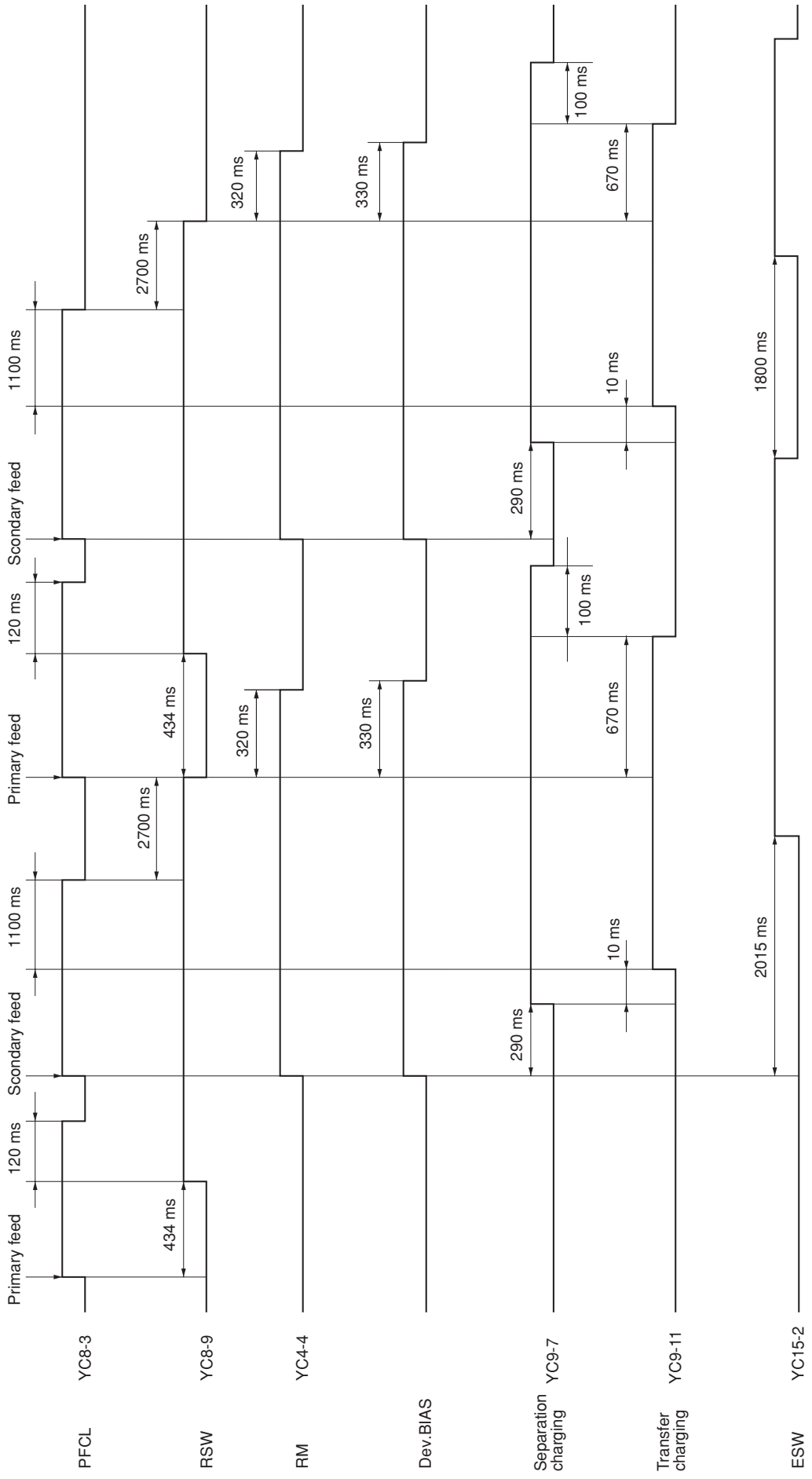

Timing chart No. 3 Paper feed from optional first paper feeder, single-side mode, original size A4/11" × 8 1/2", two sheets

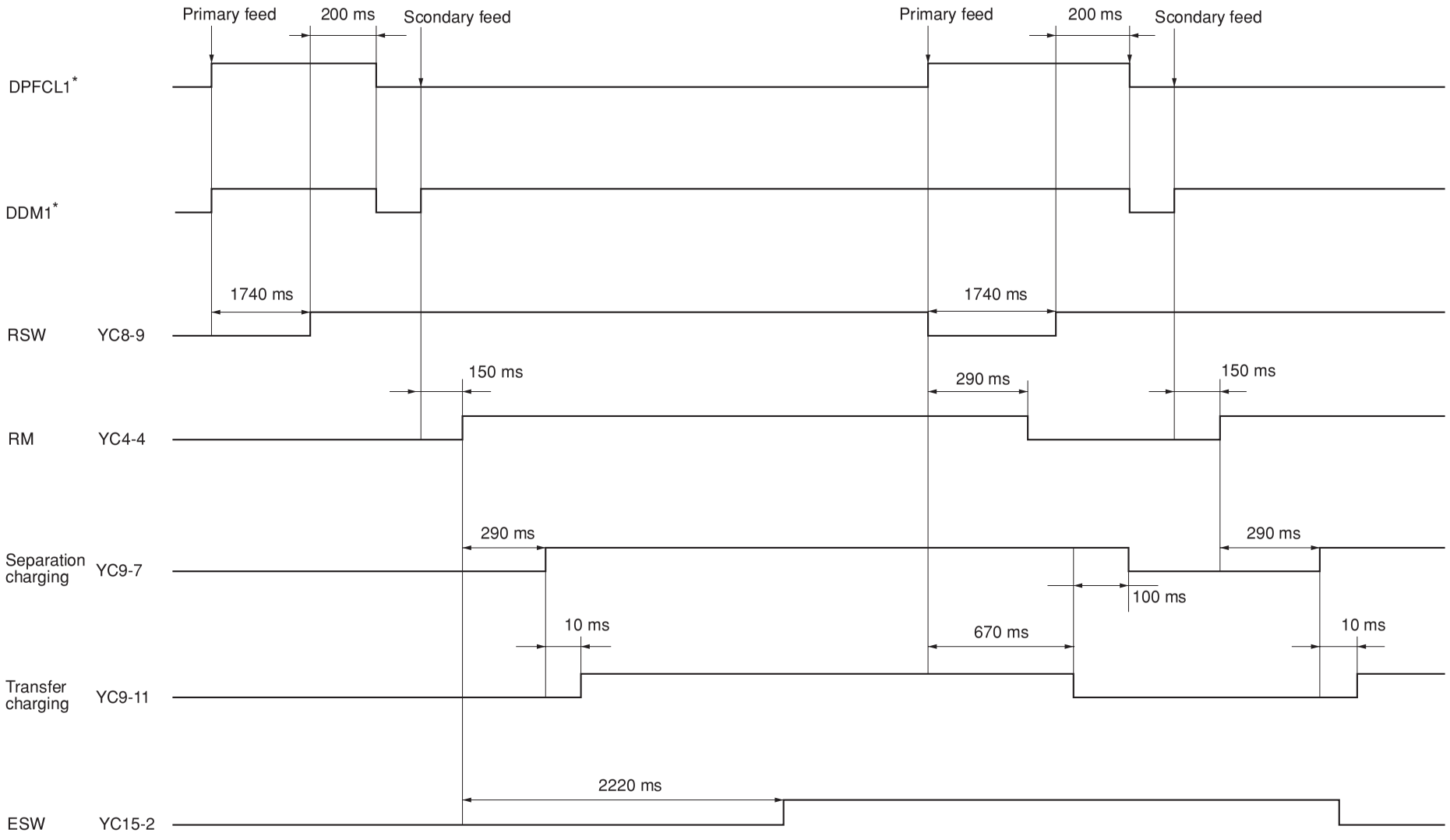

*: Optional

Timing chart No. 4 Paper feed from optional second paper feeder, single-side mode, original size A4/11" × 8 1/2", two sheets

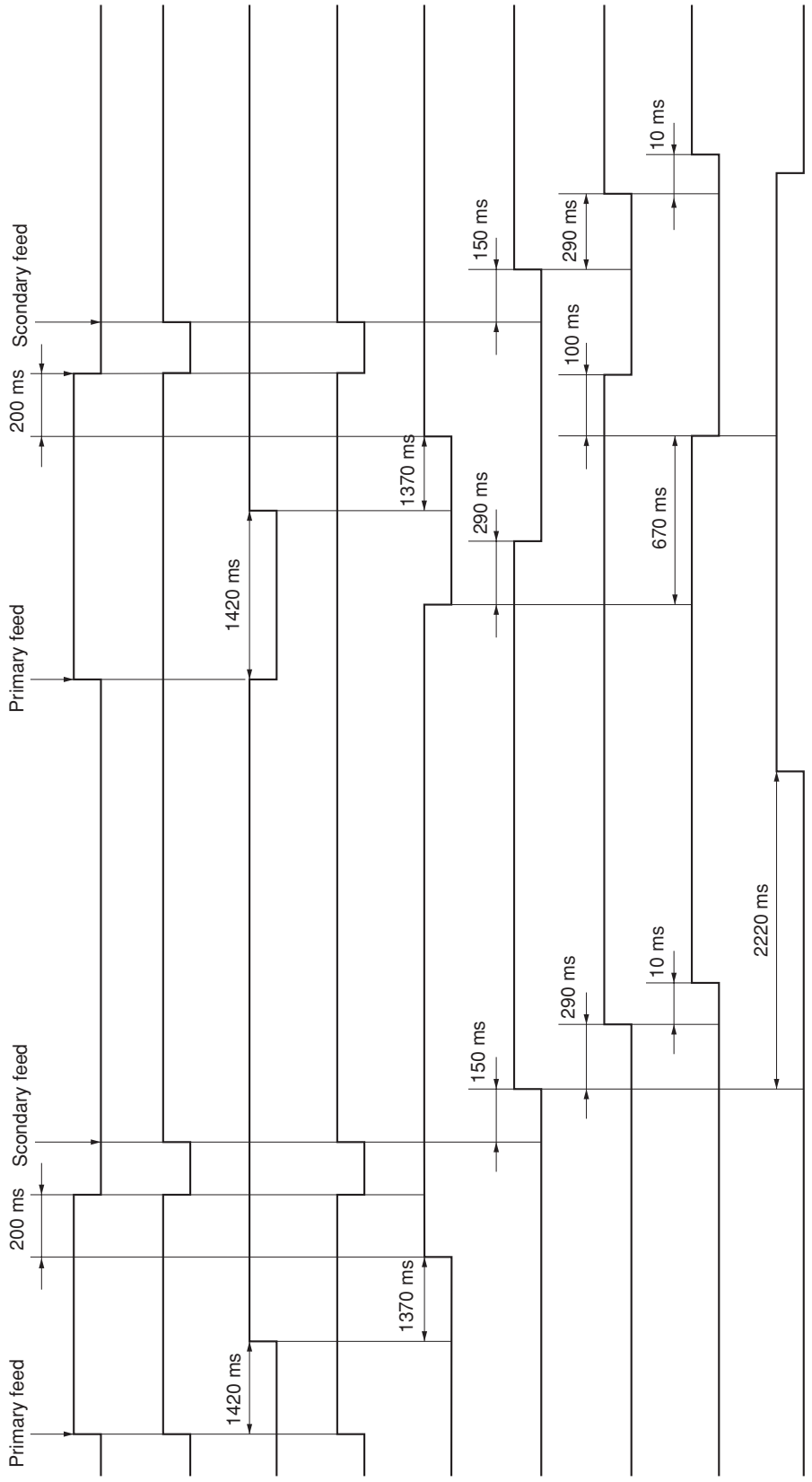

Chart of image adjustment procedures

Adjusting order	Item	Image	Description	Maintenance mode		Original	Page	Remarks
				Item No.	Exposure indicator			
①	Adjusting the magnification in the main scanning direction (printing adjustment)	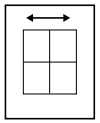	Polygon motor speed adjustment	U053	Exp.2 (light)	U053 test pattern	1-4-10	
②	Adjusting the magnification in the auxiliary scanning direction (printing adjustment)	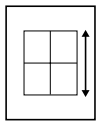	Drive motor speed adjustment	U053	Exp.1 (light)	U053 test pattern	1-4-10	
③	Adjusting the center line of the bypass tray (printing adjustment)	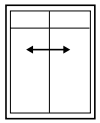	Adjusting the LSU print start timing	U034	Exp.2 (light)	U034 test pattern	1-6-14	
④	Adjusting the center line of the drawers (printing adjustment)	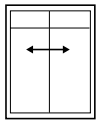	Adjusting the LSU print start timing	U034	Exp.1 (light)	U034 test pattern	1-6-14	To make an adjustment for duplex copying, select “exp.1 (flashing)”.
⑤	Adjusting the leading edge registration of the bypass tray (printing adjustment)	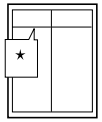	Registration motor turning on timing (secondary paper feed start timing)	U034	Exp.2 (light)	U034 test pattern	1-6-12	
⑥	Adjusting the leading edge registration of the drawer (printing adjustment)	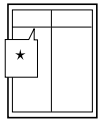	Registration motor turning on timing (secondary paper feed start timing)	U034	Exp.1 (light)	U034 test pattern	1-6-12	To make an adjustment for duplex copying, select “exp.1 (flashing)”.
⑦	Adjusting the leading edge margin (printing adjustment)	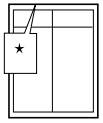	LSU illumination start timing	U402	Exp.1 (light)	U402 test pattern	1-6-15	
⑧	Adjusting the trailing edge margin (printing adjustment)	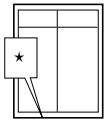	LSU illumination end timing	U402	Exp.3 (light)	U402 test pattern	1-6-15	

Adjusting order	Item	Image	Description	Maintenance mode		Original	Page	Remarks
				Item No.	Exposure indicator			
⑨	Adjusting the left and right margins (printing adjustment)	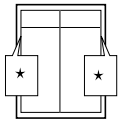	LSU illumination start/end timing	U402	Exp.2 (light)	U402 test pattern	1-6-15	
⑩	Adjusting magnification of the scanner in the main scanning direction (scanning adjustment)	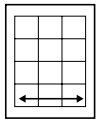	Data processing	U065	Exp.1 (light)	Test chart	1-6-28	No adjustment for copying using the DP.
⑪	Adjusting magnification of the scanner in the auxiliary scanning direction (scanning adjustment)	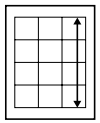	Original scanning speed	U065 U070	Exp.2 (light)	Test chart	1-6-28 1-4-13	U065: For copying an original placed on the contact glass. U070: For copying originals from the DP.
⑫	Adjusting the center line (scanning adjustment)	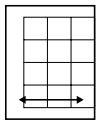	Adjusting the original scan data (image adjustment)	U067 U072	— —	Test chart	1-6-31 1-4-15	U067: For copying an original placed on the contact glass. U072: For copying originals from the DP.
⑬	Adjusting the leading edge registration (scanning adjustment)	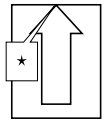	Original scan start timing	U066 U071	— —	Test chart	1-6-30 1-4-14	U066: For copying an original placed on the contact glass. U071: For copying originals from the DP.
⑭	Adjusting the leading edge margin (scanning adjustment)	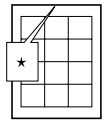	Adjusting the original scan data (image adjustment)	U403 U404	Exp.2 (light) Exp.2 (light)	Test chart	1-6-32 1-4-36	U403: For copying an original placed on the contact glass. U404: For copying originals from the DP.
⑮	Adjusting the trailing edge margin (scanning adjustment)	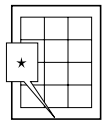	Adjusting the original scan data (image adjustment)	U403 U404	Exp.4 (light) Exp.4 (light)	Test chart	1-6-32 1-4-36	U403: For copying an original placed on the contact glass. U404: For copying originals from the DP.
⑯	Adjusting the left and right margins (scanning adjustment)	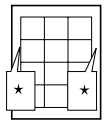	Adjusting the original scan data (image adjustment)	U403 U404	Exp.1 (light) /Exp.3 (light) Exp.1 (light) /Exp.3 (light)	Test chart	1-6-32 1-4-36	U403: For copying an original placed on the contact glass. U404: For copying originals from the DP.

When maintenance item U092 (Adjusting the scanner automatically) is run using the specified original (P/N 2A068020), the following adjustments are automatically made:
- Adjusting the scanner center line (U067)
- Adjusting the scanner magnification in the main scanning direction (U065)
- Adjusting the scanner leading edge registration (U066)
- Adjusting the scanner magnification in the auxiliary scanning direction (U065)
- Adjusting margins for reading an original on the contact glass (U403)

When maintenance item U074 (Adjusting the DP automatically) is run using the specified original (P/N 2AC68241), the following adjustments are automatically made:
- Adjusting the DP magnification (U070)
- Adjusting the DP scanning timing (U071)
- Adjusting the DP center line (U072)
- Adjusting margins for DP original reading (U404)

Image quality

Item	Specifications
100% magnification	Copier: ±0.8% Using DP: ±1.5%
Enlargement/reduction	Copier: ±1.0% Using DP: ±2.0%
Lateral squareness	Copier: ±1.5 mm/375 mm Using DP: ±3.0 mm/375 mm
Margins	A: 3.0± 2.5 mm B: 3.0 ± 2.5 mm C: 3.0± 2.5 mm D: 3.0 ± 2.5mm
Leading edge registration	Drawer: ±2.5 mm Bypass: ±2.5 mm Duplex copying: ±2.5 mm
Skewed paper feed (left-right difference)	Drawer: 1.5 mm or less Bypass: 1.5 mm or less Duplex copying: 2.0 mm or less
Lateral image shifting	Drawer: ±2.0 mm Bypass: ±2.0 mm Duplex copying: ±3.0 mm

Maintenance parts list

Maintenance part name		Part No.	Fig. No.	Ref. No.
Name used in service manual	Name used in parts list			
Paper feed pulley	PULLEY, PAPER FEED	2AR07220	5	39
Separation pulley	PULLEY, SEPARATION	2AR07230	5	40
Forwarding pulley	PULLEY, LEADING FEED	2AR07240	5	41
Bypass paper feed pulley	PULLEY BYPASS	2C906180	6	19
Bypass separation pad	SHEET BYPASS PAD	2C906160	6	17
Left registration roller	ROLLER REGIST LEFT	2C916020	4	1
Right registration roller	RIGHT ROLL REGIST	2C907180	5	9
Registration cleaner	RIGHT CLEANER REGIST	2C907450	5	27
Slit glass	CONTACT GLASS ADF	2C912280	8	27
Contact glass	CONTACT GLASS	2C912250	8	24
Mirror 1	MIRROR A	2C912390	8	37
Mirror 2 and mirror 3	MIRROR B	2AV12160	8	4
Lens	LENS	2C912500	–	–
Reflector	REFLECTOR SCANNER	2C912110	8	12
Exposure lamp	LAMP SCANNER YG	2C912090	8	10
Front scanner rail	FRONT RAIL SCANNER	2C912070	–	–
Rear scanner rail	REAR RAIL SCANNER	2C912080	–	–
Original size detection sensor	SENSOR ORIGINAL	2C912090	8	55
Transfer roller	ROLLER TRANSFER	2C917010	4	21
Separation electrode	PLATE STA ELIMINATION	2C917080	4	28
Developing unit	PARTS, DV-410, SP	2C993030	9	1
Drum unit	SET MK-410	2C982010	9	5
Fixing unit	PARTS, FK-410(A), SP	2C993050	10	–
Fixing unit	PARTS, FK-410(E), SP	2C993060	10	–
Heat roller	ROLLER HEAT	2C920050	10	5
Press roller	ROLLER PRESS	2C920060	10	6
Heat roller separation claw	SEPARATOR ASSY	2BR20240	10	24
Exit roller	ROLLER EXIT INNER	2C921010	7	17
Exit pulley	PULLEY EJECT	2C921360	7	46
Switchback roller	ROLLER FEED SHIFT	2C921020	7	18
Switchback pulley	PULLEY FEED SHIFT	2C921040	7	19

Periodic maintenance procedures

Section	Maintenance part/location	Method	Maintenance cycle	Points and cautions	Page
Test copy and test print	Perform at the maximum copy size	Test copy	Every service		

Section	Maintenance part/location	Method	Maintenance cycle	Points and cautions	Page
Paper feed section	Paper feed pulley	Clean or replace	-	Clean with the rubber roller cleanliness.	1-6-5
	Separation pulley	Clean or replace	-	Clean with the rubber roller cleanliness.	1-6-3
	Forwarding pulley	Clean or replace	-	Clean with the rubber roller cleanliness.	1-6-5
	Bypass paper feed pulley	Clean or replace	-	Clean with alcohol or a dry cloth.	1-6-9
	Bypass separation pad	Clean or replace	-	Clean with alcohol or a dry cloth.	1-6-9
	Left registration roller	Clean or replace	Every 150,000 counts	Clean with alcohol or a dry cloth.	1-6-11
	Right registration roller	Clean	Every 150,000 counts	Clean with alcohol or a dry cloth.	
	Registration cleaner	Clean or replace	Every 150,000 counts	Vacuum.	1-6-11

Section	Maintenance part/location	Method	Maintenance cycle	Points and cautions	Page
Optical section	Slit glass	Clean	Every 150,000 counts	Clean with alcohol and then a dry cloth.	
	Contact glass	Clean	Every 150,000 counts	Clean with alcohol and then a dry cloth.	
	Mirror 1	Clean	-	Clean with alcohol and then a dry cloth only if vertical black lines appear on the copy image.	
	Mirror 2 and mirror 3	Clean	-	Clean with alcohol and then a dry cloth only if vertical black lines appear on the copy image.	
	Lens	Clean	-	Clean with alcohol and then a dry cloth only if vertical black lines appear on the copy image.	
	Reflector	Clean	-	Clean with alcohol and then a dry cloth only if vertical black lines appear on the copy image.	
	Exposure lamp	Clean or replace	-	Replace if an image problem occurs or after the exposure lamp does not turn on.	1-6-17
	Optical rail	Grease	-	Check noise and shifting and then apply scanner rail grease EM-50E.	
	Original size detection sensor	Clean	-	Clean with alcohol or a dry cloth.	

Section	Maintenance part/location	Method	Maintenance cycle	Points and cautions	Page
Transfer and separation section	Transfer roller Separation electrode	Clean Check or clean	- -	Vaccum or clean with a dry cloth. Clean with the equipped brush.	1-6-37

Section	Maintenance part/location	Method	Maintenance cycle	Points and cautions	Page
Developing section	Developing unit	Check or replace	-	Replace if the problem occurs.	1-6-36

Section	Maintenance part/location	Method	Maintenance cycle	Points and cautions	Page
Drum section	Drum unit	Check or replace	Every 150,000 counts	Replace if the problem occurs.	1-6-33

Section	Maintenance part/location	Method	Maintenance cycle	Points and cautions	Page
Fixing section	Fixing unit	Check or replace	-	Replace if the problem occurs.	1-6-38
	Heat roller	Clean	Every 150,000 counts	Clean with alcohol.	1-6-39
	Press roller	Clean	Every 150,000 counts	Clean with alcohol.	1-6-42
	Heat roller separation	Clean or replace claw	Every 150,000 counts	Clean with alcohol. Replace if it is being lacking, deformed or rubbing.	1-6-41

Section	Maintenance part/location	Method	Maintenance cycle	Points and cautions	Page
Exit section	Exit roller	Check or clean	-	Clean with alcohol or a dry cloth.	
	Exit pulley	Check or clean	-	Clean with alcohol or a dry cloth.	
	Switchback roller	Check or clean	-	Clean with alcohol or a dry cloth.	
	Switchback pulley	Check or clean	-	Clean with alcohol or a dry cloth.	

Section	Maintenance part/location	Method	Maintenance cycle	Points and cautions	Page
Covers	Covers	Clean	Every 150,000 counts	Clean with alcohol or a dry cloth.	

Section	Maintenance part/location	Method	Maintenance cycle	Points and cautions	Page
Other	Image quality	Check and adjust	Every service		

Optional devices supplied parts list

DP

Name used in service manual	Name used in installation guide	Part No.
Fixing fitting	Fixing fitting	3HL02150
Pin	Pin	3HL02180
Bronze TP screw M3 × 06	Bronze TP screw M3 × 06	B4303060
Chrome TP screw M4 × 10	Chrome TP screw M4 × 10	B4104100

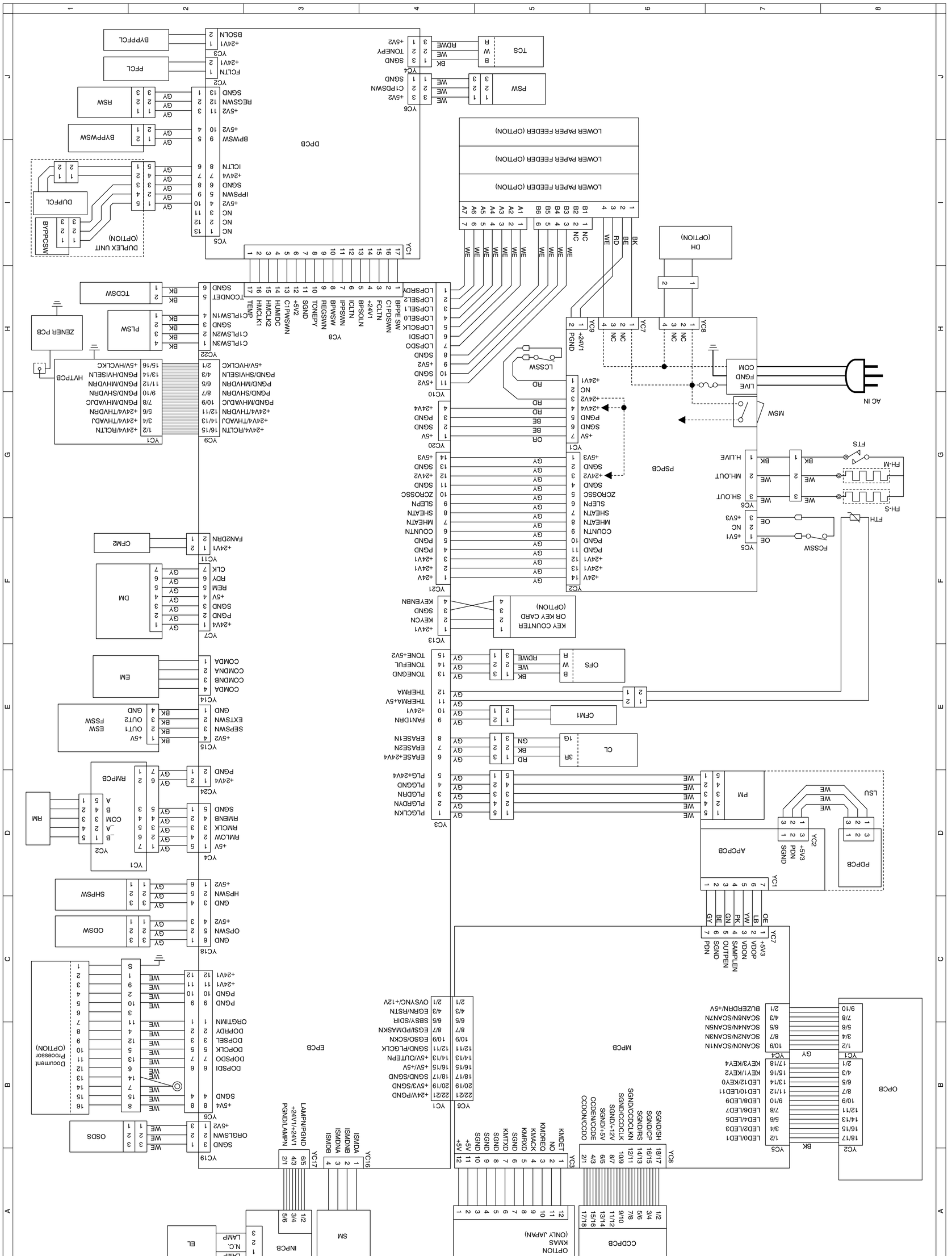

General wiring diagram

KYOCERA MITA EUROPE B.V.

Hoeksteen 40, 2132 MS Hoofddorp,
The Netherlands
Phone: +31.(0)20.654.000
Home page: http://www.kyoceramita-europe.com
Email: info@kyoceramita-europe.com

KYOCERA MITA NEDERLAND B.V.

Hoeksteen 40 2132 MS Hoofddorp
The Netherlands
Phone: +31.(0)20.587.7200

KYOCERA MITA (UK) LTD.

8 Beacontree Plaza
Gillette Way,
Reading Berks RG2 0BS, UK
Phone: +44.(0)118.931.1500

KYOCERA MITA ITALIA S.P.A.

Via Verdi 89 / 91 20063 Cernusco sul Naviglio,
Italy
Phone: +39.02.92179.1

S.A. KYOCERA MITA BELGIUM N.V.

Hermesstraat 8A 1930 Zaventem Belgium
Phone: +32.(0)2.720.9270

KYOCERA MITA FRANCE S.A.

Parc Les Algorlthmes
Saint Aubin
91194 GIF-SUR-YVETTE
France
Phone: +33.(0)1.6985.2600

KYOCERA MITA ESPAÑA S.A.

Edificio Kyocera, Avda de Manacor N. 2,
Urb. Parque Rozas 28290 Las Rozas,
Madrid, Spain
Phone: +34.(0)91.631.8392

KYOCERA MITA FINLAND OY

Kirvesmiehenkatu 4 00810 Helsinki,
Finland
Phone: +358.(0)9.4780.5200

KYOCERA MITA (SCHWEIZ) AG

Holzliwisen Industriestrasse 28
8604 Volketswil, Switzerland
Phone: +41.(0)1.908.4949

KYOCERA MITA DEUTSCHLAND GMBH

Mollsfeld 12 D-40670 Meerbusch,
Germany
Phone: +49.(0)2159.918.0

KYOCERA MITA GMBH AUSTRIA

Eduard-Kittenberger Gasse 95
1230 Wien, Austria
Phone: +43.(0)1.86338.0

KYOCERA MITA SVENSKA AB

Box 1402 171 27 Solna, Sweden
Phone: +46.(0)8.546.550.00

KYOCERA MITA NORGE

Postboks 150 Oppsal, NO 0619 Oslo
Olaf Helsetsvei 6, NO 0694 Oslo
Phone: +47.(0)22.62.73.00

KYOCERA MITA DANMARK A/S

Hovedkontor: Slotsmarken 11,
DK-2970 Hørsholm, Denmark
Phone: +45.(70)22.3880

KYOCERA MITA PORTUGAL LDA.

Rua do Centro Cultural, no 41 1700-106
Lisbon, Portugal
Phone: +351.(0)21.842.9100

KYOCERA MITA SOUTH AFRICA (PTY) LTD.

527 Kyalami Boulevard,
Kyalami Business Park 1685 Midrand South
Phone: +27.(0)11.466.3290

KYOCERA MITA AMERICA, INC.

Headquarters:
225 Sand Road,
Fairfield, New Jersey 07004-0008,
U.S.A.
Phone: (973) 808-8444

KYOCERA MITA AUSTRALIA PTY. LTD.

Level 3, 6-10 Talavera Road, North Ryde,
N.S.W. 2113 Australia
Phone: (02) 9888-9999

KYOCERA MITA NEW ZEALAND LTD.

1-3 Parkhead Place, Albany
P.O. Box 302 125 NHPC,Auckland,
New Zealand
Phone: (09) 415-4517

KYOCERA MITA (THAILAND) CORP., LTD.

9/209 Ratchada-Prachachem Road,
Bang Sue, Bangkok 10800, Thailand
Phone: (02) 586-0320

KYOCERA MITA SINGAPORE PTE LTD.

121 Genting Lane, 3rd Level,
Singapore 349572
Phone: 67418733

KYOCERA MITA HONG KONG LIMITED

11/F., Mita Centre,
552-566, Castle Peak Road,
Tsuen Wan, New Territories,
Hong Kong
Phone: 24297422

KYOCERA MITA TAIWAN Corporation.

7F-1~2, No.41, Lane 221, Gangchi Rd.
Neihu District, Taipei, Taiwan, 114. R.O.C.
Phone: (02) 87511560

KYOCERA MITA Corporation

2-28, 1-chome, Tamatsukuri, Chuo-ku
Osaka 540-8585, Japan
Phone: (06) 6764-3555
http://www.kyoceramita.com

©2003 KYOCERA MITA CORPORATION

KYOCERA is a trademark of Kyocera Corporation

mita is a registered trademark of KYOCERA MITA CORPORATION

Printed in Holland