KYOCERA mita

KM-2530
KM-3530

PARTS LIST

Published in Jun.'01
842BH120

NOTE

1.Indicate parts number and machine model when placing an order.

eg.	Parts Number	Parts Name	Machine Model	Cycle	Quantity
	2BH04010	RIGHT FRONT COVER	KM-2530	60Hz	1
	2BJ04200	RIGHT FRONT COVER	KM-3530	60Hz	1

2.Service calls and freight will be charged separately.

3.Symbols in the "Parts Number" column.

- Parts with "◉" indicates the service parts and the parts without "◉" can not be supplied.

- Parts with "•" are component parts or sub-assemblies of the assembly appearing immediately above them.

eg.	Parts Number	Parts Name	Parts Number	Parts Name
	2BL68150	VERTICAL FEED ASS'Y	•2BL06030	FRAME VERTICAL FEED 1/4
			•2BL06220	EARTH VERTICAL FEED

- Parts with "• •" are component parts or sub-assembly with "•" appearing immediately above them.

eg.	Parts Number	Parts Name	Parts Number	Parts Name
	•2BL68040	CLAW SEPARATION ASSY	••2BL18270	HOLDER CLAW
			••2AR18260	PULLEY, CLAW SEPARATION

4.See the last page of this parts list for the classification of the screws in the illustrations.

Parts List

KM-2530
KM-3530

CONTENTS

FIG. 1 EXTERIOR COVERS · · · · · 2
FIG. 2 FRAMES · · · · · 4
FIG. 3 CASSETTE · · · · · 6
FIG. 4 PAPER FEED-IN SECTION I · · · · · 8
FIG. 5 PAPER FEED-IN SECTION II · · · · · 10
FIG. 6 PAPER FEED-IN SECTION III · · · · · 12
FIG. 7 PAPER CONVEYING SECTION · · · · · 14
FIG. 8 PAPER EXIT SECTION · · · · · 16
FIG. 9 OPTICAL SECTION · · · · · 18
FIG. 10 BYPASS UNIT · · · · · 20
FIG. 11 BYPASS FEED UNIT · · · · · 22
FIG. 12 LASER SCANNER UNIT · · · · · 24
FIG. 13 DEVELOPING SECTION · · · · · 26
FIG. 14 FIXING SECTION · · · · · 28
FIG. 15 CLEANING SECTION · · · · · 30
FIG. 16 DRIVING, COOLING SECTION I · · · · · 32
FIG. 17 DRIVING, COOLING SECTION II · · · · · 34
FIG. 18 ELECTRICAL COMPONENTS · · · · · 36
FIG. 19 OPERATION UNIT · · · · · 40
FIG. 20 OPTION (ORIGINAL HOLDER) · · · · · 42
FIG. 21 OPTION & TOOL · · · · · 44

• INDEX · · · · · 46

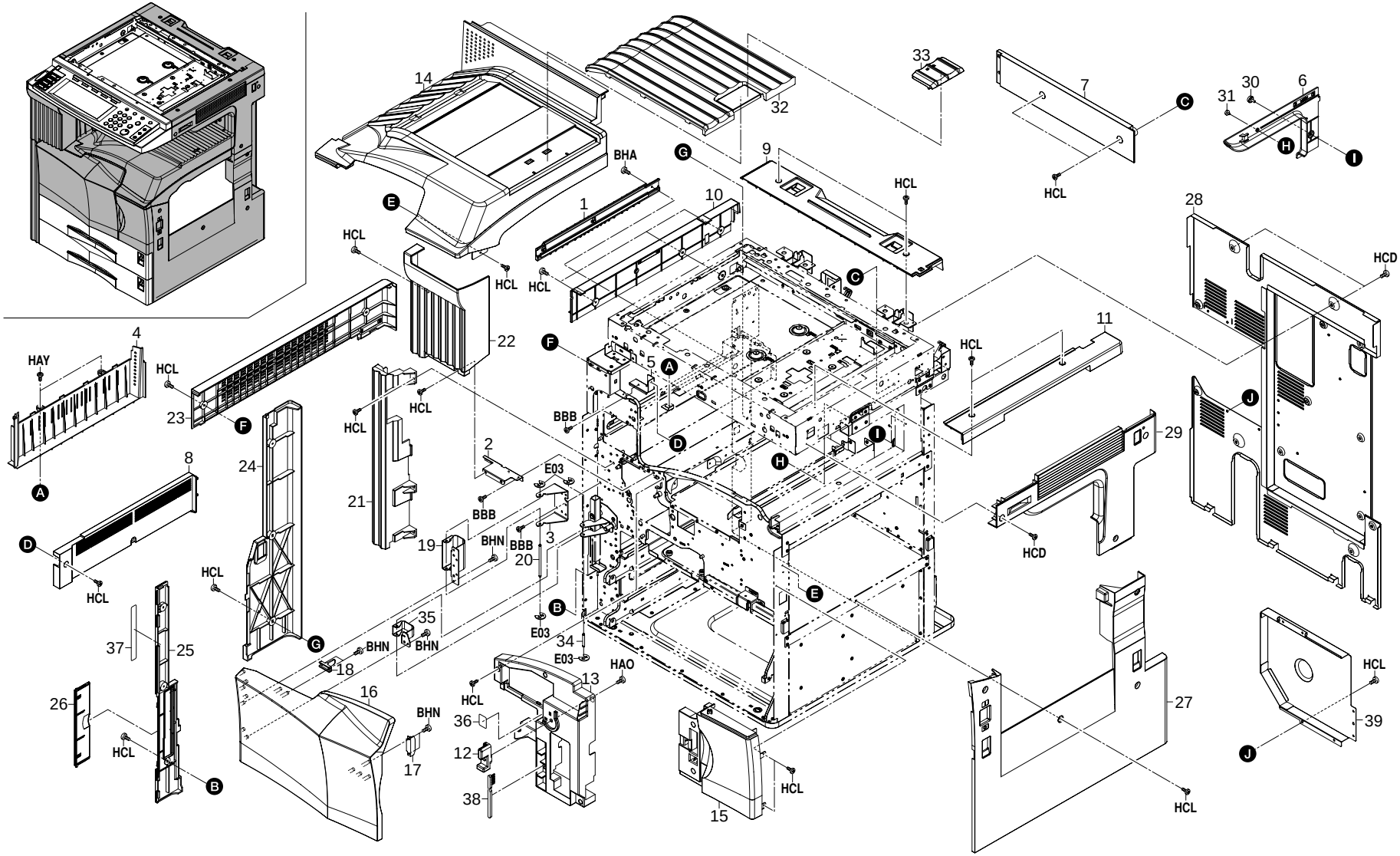
1
2
3
4
5
6
7
8
9
10
11
12
13
14
15
16
17
18
19
20
21
22
23
24
25
26
27
28
29
30
31
32
33
34
35
36
37
38
39
BHA
BBB
E03
BHN
HAO
HAY
HCL
HCD
A
B
C
D
E
F
G
H
I
J

FIG. 1 EXTERIOR COVERS

SP	Ref. No.	Part. No.	Description	Quantity		
				120V	230V	240V
	1	2BL21350	GUIDE DU FEED R	1	1	1
	2	2BL04320	MOUNT TRAY EJECT	1	1	1
	3	2BL04220	MOUNT HINGE	1	1	1
◉	4	2BL04100	COVER EXIT LOW	1	1	1
	5	2BJ04150	MOUNT LEFT FRONT COVER	1	1	1
◉	6	2BJ04050	RIGHT COVER TRAY	1	1	1
◉	7	2BJ04030	REAR COVER TRAY	1	1	1
◉	8	2BJ04040	UPPER EJECT COVER	1	1	1
◉	9	2AV04100	REAR COVER SCANNER	1	1	1
◉	10	2BJ04060	UPPER LEFT COVER A	1	1	1
◉	11	2BJ04080	UPPER RIGHT COVER A	1	1	1
	12	2BJ04180	LEVER CONT RELEASE	1	1	1
	13	2BJ04140	INNER RIGHT COVER	1	1	1
◉	14	2BL04040	TRAY EJECT	1	1	1
◉	15	2BJ04200	RIGHT FRONT COVER	1	1	1
◉	15	2BH04010	RIGHT FRONT COVER	1	1	1
◉	16	2BL04030	FRONT COVER MIDDLE	1	1	1
	17	60804120	MAGNET CATCH	1	1	1
◉	18	2BL04330	HOLDER SWITCH	1	1	1
	19	2BL04350	FRONT HINGE COVER P	1	1	1
	20	2BL04190	PIN COVER HINGE	1	1	1
◉	21	2BL04150	LEFT COVER CASSETTE	1	1	1
◉	22	2BJ04010	LEFT FRONT COVER	1	1	1
◉	23	2BJ04070	UPPER LEFT COVER B	1	1	1
◉	24	2BL04120	REAR LEFT COVER	1	1	1
◉	25	2BL04110	FRONT LEFT COVER	1	1	1
◉	26	2BL04300	LID COVER LEFT	1	1	1
◉	27	2BL04130	RIGHT COVER	1	1	1
◉	28	2BJ04020	REAR COVER 1	1	1	1
◉	29	2BJ04090	UPPER RIGHT COVER B (1/2)	1	1	1
	30	74315200	PIN,TONER HOPPER	1	1	1
	31	2A126130	PIN,OPTION	1	1	1
◉	32	2BK04020	TRAY SUB C	1	1	1
◉	33	2BK04030	STOPPER PAPER C	1	1	1
	34	2BL04840	PIN COVER HINGE S	1	1	1
	35	2BL04480	FRONT COVER HINGE S	1	1	1
	36	2BL05070	LABEL SEP CLEANING	1	1	1
◉	37	2BL05120	LABEL CONVEYING JAM	1	1	1
◉	38	2BL16220	BRUSH CLEANER	1	1	1
	39	2BJ04250	COVER FLYWHEEL	1	1	1

- Parts with "•" are component parts or sub-assemblies of the assembly appearing immediately above them.
- Parts with "◉" indicates the Service parts.
- Parts with "• •" are component parts or sub-assembly with "•" appearing immediately above them.

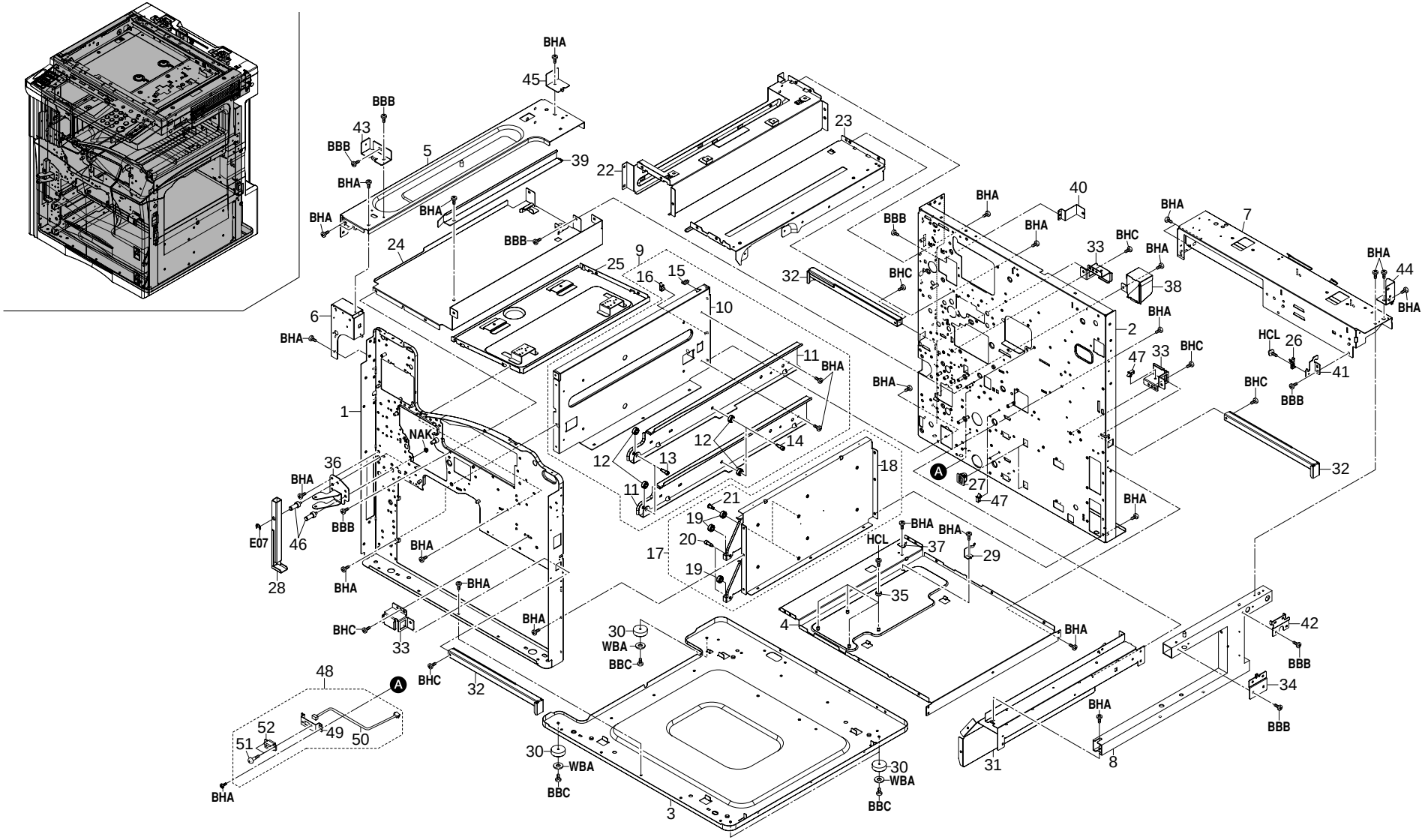
BHA
45
BBB
43
BBB
5
39
BHA
BHA
BHA
22
23
24
BBB
9
25
16
15
10
6
BHA
1
NAK
36
BHA
BBB
E07
46
28
BHA
BHA
BHC
33
BHA
BHC
32
48
A
52
51
49
50
BHA
30
WBA
BBC
30
WBA
BBC
3
30
WBA
BBC
11
BHA
12
12
13
14
11
18
21
19
20
17
19
BHA
BHA
HCL
37
29
35
4
BHA
BHA
BBB
BHC
32
BHC
33
BHC
BHA
38
BHA
2
47
33
BHC
BHA
A
27
47
BHA
BHA
7
BHA
44
BHA
HCL
26
41
BBB
BHC
32
42
BBB
34
BBB
BHA
31
8

FIG. 2 FRAMES

2BH/2BJ

SP	Ref. No.	Part. No.	Description	Quantity		
				120V	230V	240V
	1	2BL02010	FRONT FRAME	1	1	1
	2	2BL02020	REAR FRAME	1	1	1
	3	2BL02030	BASE	1	1	1
	4	2BL02040	BASE MIDDLE	1	1	1
	5	2BJ02040	UPPER LEFT PLATE	1	1	1
	6	2BJ02010	UPPER FRONT FRAME	1	1	1
	7	2BJ02020	UPPER REAR FRAME	1	1	1
	8	2BJ02030	UPPER RIGHT PIPE	1	1	1
	9	2AR00030	LOWER LEFT REINFORCEMENT ASS'Y	1	1	1
	10	•2AR02060	LOWER LEFT REINFORCEMENT	1	1	1
	11	•2AR07140	LEFT RAIL,CASSETTE	2	2	2
	12	•2AR07800	PULLEY,CASSETTE RAIL	4	4	4
	13	•2AR07810	FRONT PIN,CASSETTE RAIL	2	2	2
	14	•2AR07820	REAR PIN,CASSETTE RAIL	2	2	2
	15	•M2104350	EDGING,EDS-0607M(KITAGAWA)	1	1	1
	16	•M2109330	WIRE SADDLE,YMC-10-0(KITAGAWA)	1	1	1
	17	2AR00020	LOWER RIGHT REINFORCEMENT ASS'Y	1	1	1
	18	•2AR02050	LOWER RIGHT REINFORCEMENT	1	1	1
	19	•2AR07800	PULLEY,CASSETTE RAIL	4	4	4
	20	•2AR07810	FRONT PIN,CASSETTE RAIL	2	2	2
	21	•2AR07820	REAR PIN,CASSETTE RAIL	2	2	2
	22	2BL02100	UPPER PLATE FIXING	1	1	1
	23	2BL02060	UPPER PLATE DRUM	1	1	1
	24	2BL02130	LOWER PLATE CONT	1	1	1
	25	2BL02050	LOWER BASE LSU	1	1	1
	26	2BJ02120	HOLDER,FULCRUM	1	1	1
	27	77906291	HOLDER,CASSETTE STOPPER	2	2	2
	28	2BL02140	HANDLE MACHINE	1	1	1
	29	2BL06840	SPRING BYPASS RET	1	1	1
	30	2AR02180	BASE RUBBER	4	4	4
	31	2BL02120	UPPER RIGHT PLATE	1	1	1
	32	2BL02180	RIGHT HANDLE MACHINE	3	3	3
	33	2BL02150	MOUNT RIGHT HANDLE	3	3	3
	34	2BJ02050	RIGHT MOUNT ISU	1	1	1
	35	2BL06590	PULLEY RAIL	4	4	4
	36	2BL04770	MOUNT HINGE S	1	1	1
	37	2BL06410	GROUND PLATE MIDDLE	1	1	1
	38	2AR07720	COVER,CASSETTE RAIL	1	1	1
	39	2BJ02100	RAIL CONT	1	1	1
	40	2BL02200	MOUNT REAR COVER	1	1	1
	41	2BJ02110	FULCRUM PLATE,MIDDLE TRAY	1	1	1
	42	2BJ02070	REAR MOUNT ISU	1	1	1
	43	2BJ02060	FRONT MOUNT ISU	1	1	1
	44	2BJ02080	MOUNT COVER R	1	1	1
	45	2BJ02090	MOUNT COVER L	1	1	1
	46	2BL02170	PIN HANDLE	2	2	2
	47	M2109330	WIRE SADDLE,YMC-10-0(KITAGAWA)	3	3	3
	48	2AR00610	PAPER FEED DRAWER ASS'Y	2	2	2
	49	•2AR07710	MOUNT,PAPER FEED DRAWER	2	2	2
	50	•2AR27600	JUNCTION WIRING,PRIMARY PAPER FEED UNIT	2	2	2
	51	•33927450	RETAINING PIN,DRAWER	4	4	4
◉	52	•J0464080	RECEPTACLE,QR/P15-8S-C(02)(HIROSE)	2	2	2

• Parts with "•" are component parts or sub-assemblies of the assembly appearing immediately above them.
• Parts with "◉" indicates the Service parts.

• Parts with "• •" are component parts or sub-assembly with "•" appearing immediately above them.

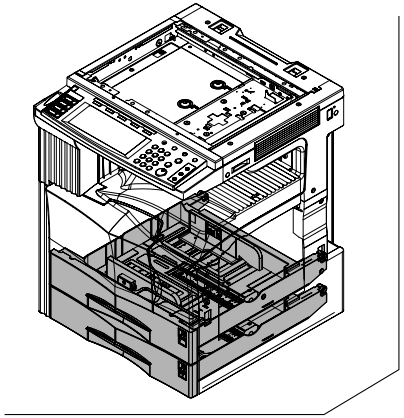

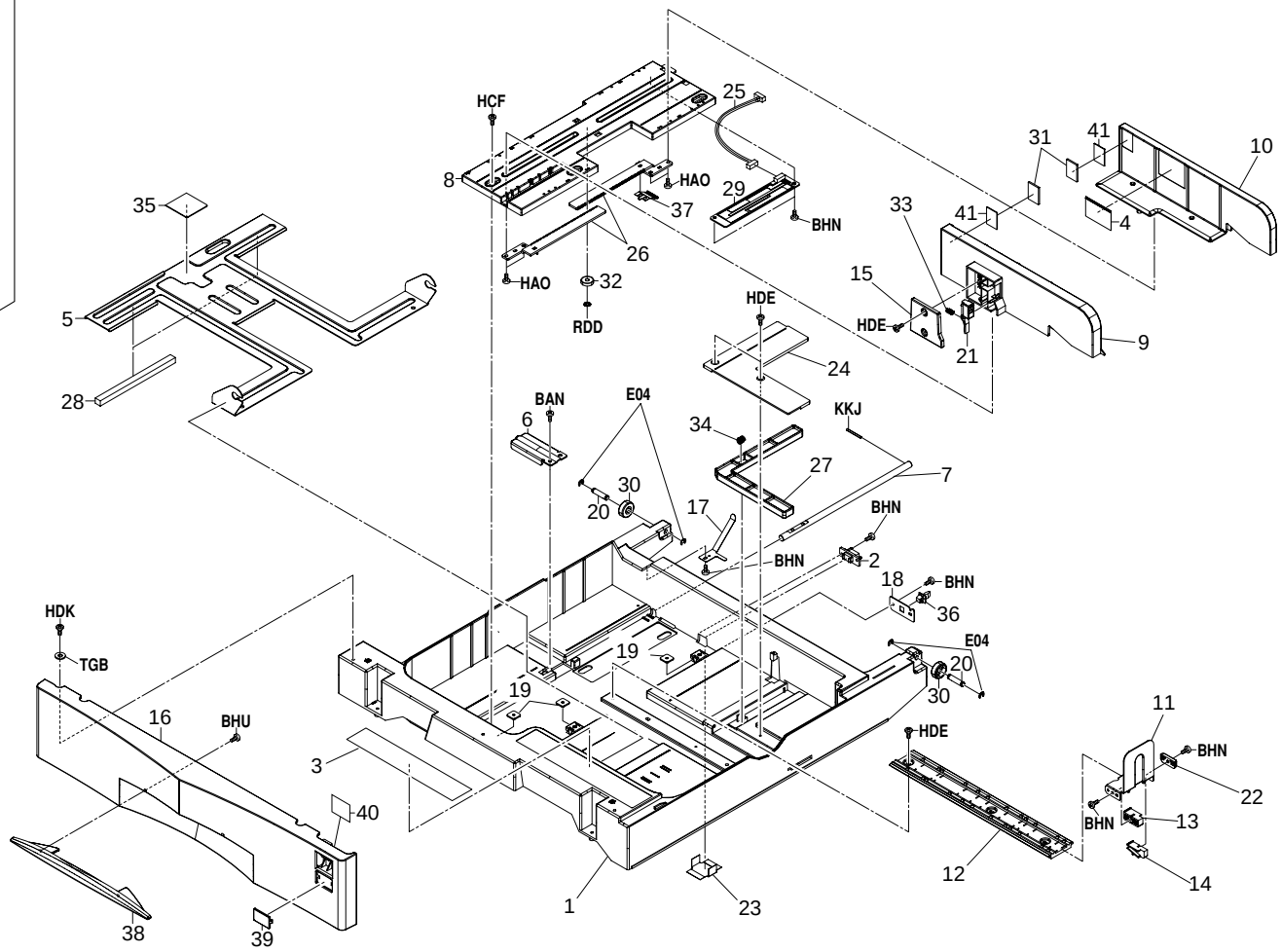
HCF
25
8
HAO
29
37
BHN
26
HAO
32
RDD
35
5
28
31
41
10
41
4
33
15
HDE
21
9
HDE
24
BAN
6
E04
34
KKJ
7
27
30
20
17
BHN
2
BHN
18
BHN
36
E04
20
30
19
19
HDK
TGB
16
BHU
3
40
38
39
HDE
11
BHN
22
BHN
13
14
12
1
23

FIG. 3 CASSETTE

SP	Ref. No.	Part. No.	Description	Quantity		
				120V	230V	240V
	1	2AR07010	CASSETTE	2	2	2
◉	2	J0463080	PLUG,QR/P15-8S-C(HIROSE)	2	2	2
	3	2AR05150	LABEL,CASSETTE OPERATION	2	2	2
	4	2AR05200	LABEL,PAPER UPPER LIMIT	2	2	2
	5	2AR07020	BASE,CASSETTE	2	2	2
	6	2AR07030	WORK PLATE,CASSETTE BASE	2	2	2
	7	2AR07040	SHAFT,WORK PLATE	2	2	2
	8	2AR07050	RAIL A,CURSOR	2	2	2
	9	2AR07060	CURSOR A,CASSETTE	2	2	2
	10	2AR07070	CURSOR B,CASSETTE	2	2	2
	11	2AR07080	CURSOR C,CASSETTE	2	2	2
	12	2AR07090	RAIL C,CURSOR	2	2	2
	13	2AR07100	FRONT GUIDE C,CURSOR	2	2	2
	14	2AR07110	REAR GUIDE C,CURSOR	2	2	2
	15	2AR07120	LID A,CURSOR	2	2	2
◉	16	2BL04140	COVER CASSETTE	2	2	2
◉	17	2AR07150	GROUND PLATE,CASSETTE	2	2	2
	18	2AR07160	MOUNT,CASSETTE STOPPER	2	2	2
	19	2AR07180	RETAINER M4	6	6	6
	20	2AR07190	SHAFT,CASSETTE PULLEY	4	4	4
	21	2AR07340	LEVER A,CURSOR	2	2	2
	22	2AR07610	STOPPER,TRAILING EDGE DETECTION	2	2	2
	23	2AR07620	PROTECTING PLATE,CASSETTE WIRE	2	2	2
	24	2AR07630	LID,TRAILING EDGE DETECTION PLATE	2	2	2
	25	2AR27220	WIRE,CASSETTE UNIT	2	2	2
◉	26	33907100	RACK,CASSETTE	4	4	4
	27	33907170	DETECTION PLATE,PAPER SIZE	2	2	2
◉	28	33907210	CUSHION,CASSETTE WORK PLATE	4	4	4
◉	29	33928111	SIZE DETECTION PCB	2	2	2
◉	30	34907150	PULLEY,CASSETTE	4	4	4
◉	31	60907170	CUSHION,CASSETTE R	4	4	4
◉	32	65914120	GEAR 18,IDLE DEVELOPING	2	2	2
	33	66007120	SPRING,CURSOR C	2	2	2
◉	34	66106080	SPRING,PAD	2	2	2
◉	35	66107100	PAD,CASSETTE	2	2	2
	36	77906210	CASSETTE STOPPER	2	2	2
	37	33907110	TERMINAL,PAPER SIZE PCB	2	2	2
◉	38	2BL04160	HANDLE CASSETTE	2	2	2
◉	39	2BL04310	PLATE NUMBER	1	1	1
◉	39	2BL04370	PLATE NUMBER 2	1	1	1
◉	40	2BL06470	PLATE SIZE C		2	2
◉	40	2BL06910	PLATE SIZE IN	2		
	41	2AR06890	MOUNT CUSHION	4	4	4

• Parts with "•" are component parts or sub-assemblies of the assembly appearing immediately above them.
• Parts with "◉" indicates the Service parts.

• Parts with "• •" are component parts or sub-assembly with "•" appearing immediately above them.

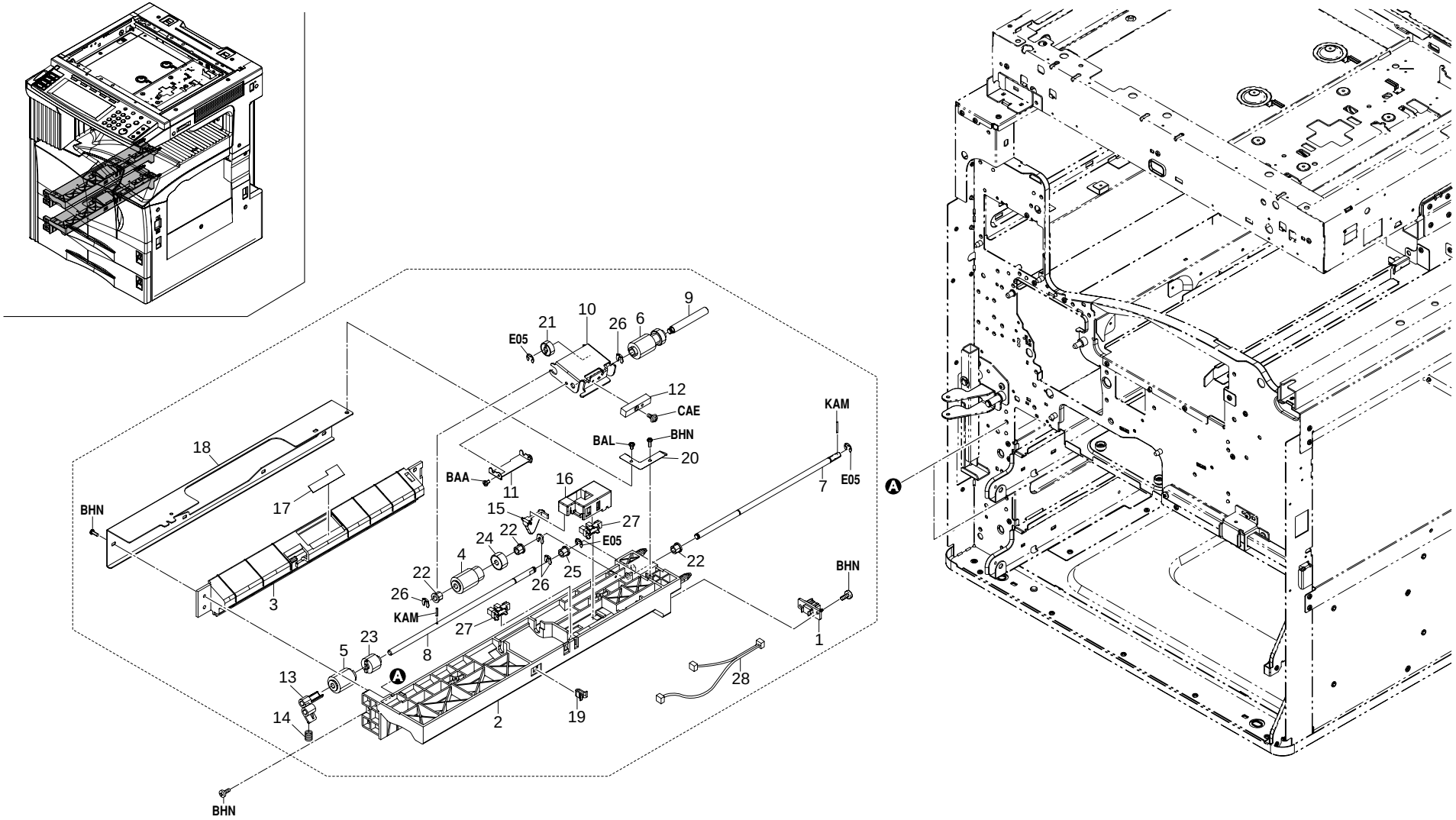
1
2
3
4
5
6
7
8
9
10
11
12
13
14
15
16
17
18
19
20
21
22
23
24
25
26
27
28
A
BHN
BAA
BAL
CAE
E05
KAM

FIG. 4 PAPER FEED-IN SECTION I

SP	Ref. No.	Part. No.	Description	Quantity		
				120V	230V	240V
◉		2AR00160	PRIMARY PAPER FEED ASS'Y	2	2	2
◉	1	•J0463080	PLUG,QR/P15-8S-C(HIROSE)	2	2	2
	2	•2AR07200	UPPER HOUSING,PAPER FEED	2	2	2
	3	•2AR07210	LOWER HOUSING,PAPER FEED	2	2	2
◉	4	•2AR07220	PULLEY,PAPER FEED	2	2	2
◉	5	•2AR07230	PULLEY,SEPARATION	2	2	2
◉	6	•2AR07240	PULLEY,LEADING FEED	2	2	2
	7	•2AR07250	SHAFT,PAPER FEED	2	2	2
	8	•2AR07260	SHAFT,SEPARATION	2	2	2
	9	•2AR07270	SHAFT,LEADING FEED	2	2	2
	10	•2AR07280	SUPPORT PLATE,LEADING FEED PULLEY	2	2	2
	11	•2AR07290	REINFORCEMENT,LEADING FEED SUPPORT PLATE	2	2	2
	12	•2AR07300	WEIGHT,LEADING FEED PULLEY	2	2	2
	13	•2AR07310	LEVER,SEPARATION PULLEY RELEASE	2	2	2
◉	14	•2AR07350	SPRING,SEPARATION PULLEY	2	2	2
	15	•2AR07640	ACTUATOR,PAPER EMPTY	2	2	2
	16	•2AR07650	HOLDER,ACTUATOR	2	2	2
	17	•2AR07660	GUIDE FILM,SEPARATION PULLEY	2	2	2
	18	•2AR07670	REINFORCEMENT,PRIMARY PAPER FEED	2	2	2
	19	•2AR07690	STOPPER,SUPPORT PLATE	2	2	2
	20	•2AR07790	GROUND PLATE,PRIMARY PAPER FEED	2	2	2
◉	21	•45729206	GEAR,TONER FEED ROLLER	2	2	2
◉	22	•29806810	BUSHING,6 REGISTRATION	6	6	6
◉	23	•33906070	TORQUE LIMITER,PAPER FEED	2	2	2
◉	24	•33906160	GEAR 16,PAPER FEED	2	2	2
◉	25	•34806040	LOWER BUSHING,PAPER FEED	2	2	2
◉	26	•34806140	STOPPER 4	8	8	8
◉	27	•35327400	SWITCH,FEED	4	4	4
	28	•2AR27430	WIRE,PRIMARY PAPER FEED UNIT	2	2	2

• Parts with "•" are component parts or sub-assemblies of the assembly appearing immediately above them.
• Parts with "◉" indicates the Service parts.

• Parts with "• •" are component parts or sub-assembly with "•" appearing immediately above them.

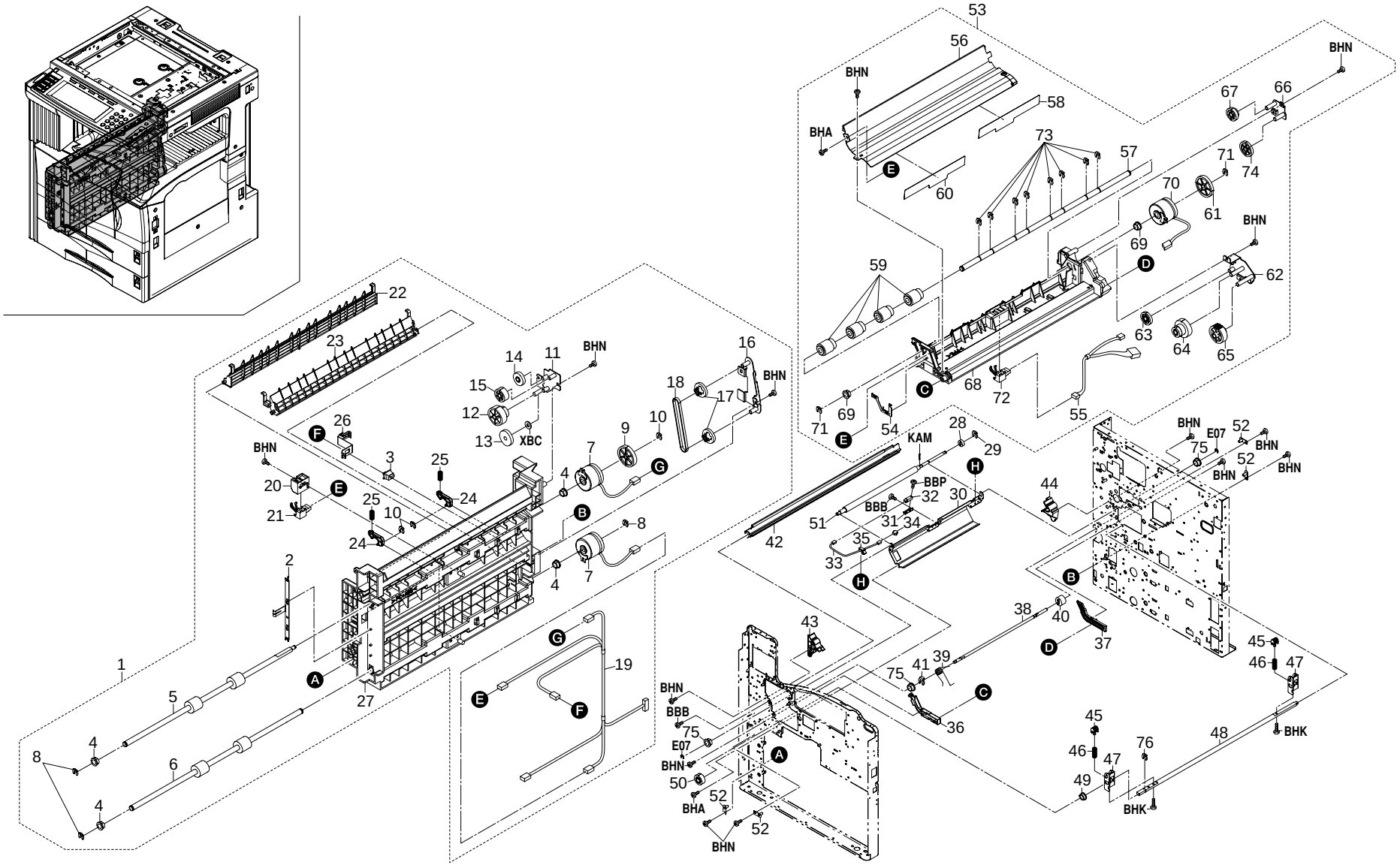
1
2
3
4
5
6
7
8
9
10
11
12
13
14
15
16
17
18
19
20
21
22
23
24
25
26
27
28
29
30
31
32
33
34
35
36
37
38
39
40
41
42
43
44
45
46
47
48
49
50
51
52
53
54
55
56
57
58
59
60
61
62
63
64
65
66
67
68
69
70
71
72
73
74
75
76
BHN
BHA
BBB
BBP
KAM
XBC
E07
BHK
A
B
C
D
E
F
G
H

FIG. 5 PAPER FEED-IN SECTION II

2BH/2BJ

SP	Ref. No.	Part. No.	Description	Quantity		
				120V	230V	240V
◉	1	2BL68150	VERTICAL FEED ASS'Y	1	1	1
	2	•2BL06220	EARTH VERTICAL FEED	1	1	1
◉	3	•35927420	SWITCH,SIZE	1	1	1
◉	4	•67322230	BUSHING 8	4	4	4
◉	5	•2BL06080	ROLLER B FEED	1	1	1
◉	6	•2BL06090	ROLLER C FEED	1	1	1
◉	7	•2BL27500	CLUTCH FEED	2	2	2
◉	8	•34806150	STOPPER 5	3	3	3
◉	9	•2BL06170	GEAR Z42 FEED	1	1	1
◉	10	•34806140	STOPPER 4	3	3	3
	11	•2BL06120	MOUNT B FEED DRIVE	1	1	1
◉	12	•2BL06200	GEAR Z21-36 FEED	1	1	1
◉	13	•36222250	GEAR 30,IDLE	1	1	1
◉	14	•2AL06110	GEAR 25	1	1	1
◉	15	•2BL06380	GEAR Z25 JOINT	1	1	1
	16	•2BL06130	MOUNT C FEED DRIVE	1	1	1
◉	17	•2BL06180	GEAR Z28-P18 FEED	2	2	2
◉	18	•2BL06320	BELT CONVEYING	1	1	1
	19	•2BL27190	WIRE CONVEYING	1	1	1
	20	•2BL06450	HOLDER FEED SWITCH	2	2	2
◉	21	•2BL27410	SWITCH CONVEYING	2	2	2
	22	•2BL06110	GUIDE VERTICAL FEED	1	1	1
	23	•2BL06330	GUIDE B FEED	1	1	1
◉	24	•5MVX421DN003	LOCK COVER RIGHT	2	2	2
	25	•2BL06460	SPRING LEFT COVER	2	2	2
	26	•2BL06940	EARTH PUSH SWITCH	1	1	1
	27	•2BL06030	FRAME VERTICAL FEED 1/4	1	1	1
◉	28	36722860	GEAR 18	1	1	1
◉	29	34806480	STOPPER 6	1	1	1
	30	2BL06260	FRONT GUIDE REGIST	1	1	1
	31	2BL06440	MOUNT REGIST SWITCH	1	1	1
◉	32	2BL27420	SWITCH REGISTRATION	1	1	1
	33	2BL27170	WIRE REGISTRATION	1	1	1
	34	J5016030	CASE,BU03P-TR-PC-H(JST)	1	1	1
	35	M2109330	WIRE SADDLE,YMC-10-0(KITAGAWA)	1	1	1
	36	2BL06050	FRONT RAIL FEED	1	1	1
	37	2BL06060	REAR RAIL FEED	1	1	1
	38	2BL04520	SHAFT LEFT COVER M	1	1	1
	39	2BL16230	SPRING CONV OPEN	1	1	1
	40	2BL06950	DUMPER LEFT COVER	1	1	1
◉	41	33973300	STOPPER 7,CARTRIDGE	1	1	1
	42	2BL17160	RIGHT GUIDE TRANSFER	1	1	1
	43	2BL06310	GUIDE ROLLER FRONT	1	1	1
	44	2BL06350	GUIDE ROLLER REAR	1	1	1
	45	2BL14240	CAM DLP	2	2	2
	46	2BL14410	SPRING CAM	2	2	2
	47	2BL14140	MOUNT CAM	2	2	2
	48	2BL14230	SHAFT CAM	1	1	1
	49	2BM17920	BUSH POM	1	1	1
	50	2BL14250	GEAR 18	1	1	1
◉	51	2BL06270	RIGHT ROLLER REGIST	1	1	1
	52	2AR02250	POSITIONING PLATE,LSU	4	4	4
◉	53	2BL68160	MIDDLE FEED ASS'Y	1	1	1
	54	•2BL06230	GROUND PLATE A FEED	1	1	1
	55	•2BL27240	WIRE FEED 1	1	1	1
	56	•2BL06020	GUIDE A FEED	1	1	1
	57	•2BL06920	SHAFT FEED A	1	1	1
◉	58	•2BL06480	FILM REGIST F	1	1	1
◉	59	•2BL06930	PULLEY FEED	4	4	4
	60	•2BL06970	FILM REGIST FF	1	1	1
◉	61	•2BL06360	GEAR Z42 BYPASS	1	1	1
	62	•2BL06140	MOUNT BYPASS DRIVE	1	1	1
◉	63	•2BL06190	GEAR Z25 FEED	1	1	1
◉	64	•2BL06160	GEAR Z35-15 FEED	1	1	1
◉	65	•2BL06150	GEAR Z28 FEED	1	1	1
	66	•2BL06010	MOUNT A FEED DRIVE	1	1	1
◉	67	•2BL06370	GEAR Z30 FEED	1	1	1
	68	•2BL06040	HOUSING FEED	1	1	1
◉	69	•67322230	BUSHING 8	2	2	2
◉	70	•2BL27500	CLUTCH FEED	1	1	1
◉	71	•34806150	STOPPER 5	2	2	2
◉	72	•2BL27410	SWITCH CONVEYING	1	1	1
◉	73	•34806480	STOPPER 6	8	8	8
◉	74	•2BL06390	GEAR DU25 JOINT	1	1	1
◉	75	67322230	BUSHING 8	3	3	3
◉	76	34806150	STOPPER 5	1	1	1

• Parts with "•" are component parts or sub-assemblies of the assembly appearing immediately above them.
• Parts with "◉" indicates the Service parts.

• Parts with "• •" are component parts or sub-assembly with "•" appearing immediately above them.

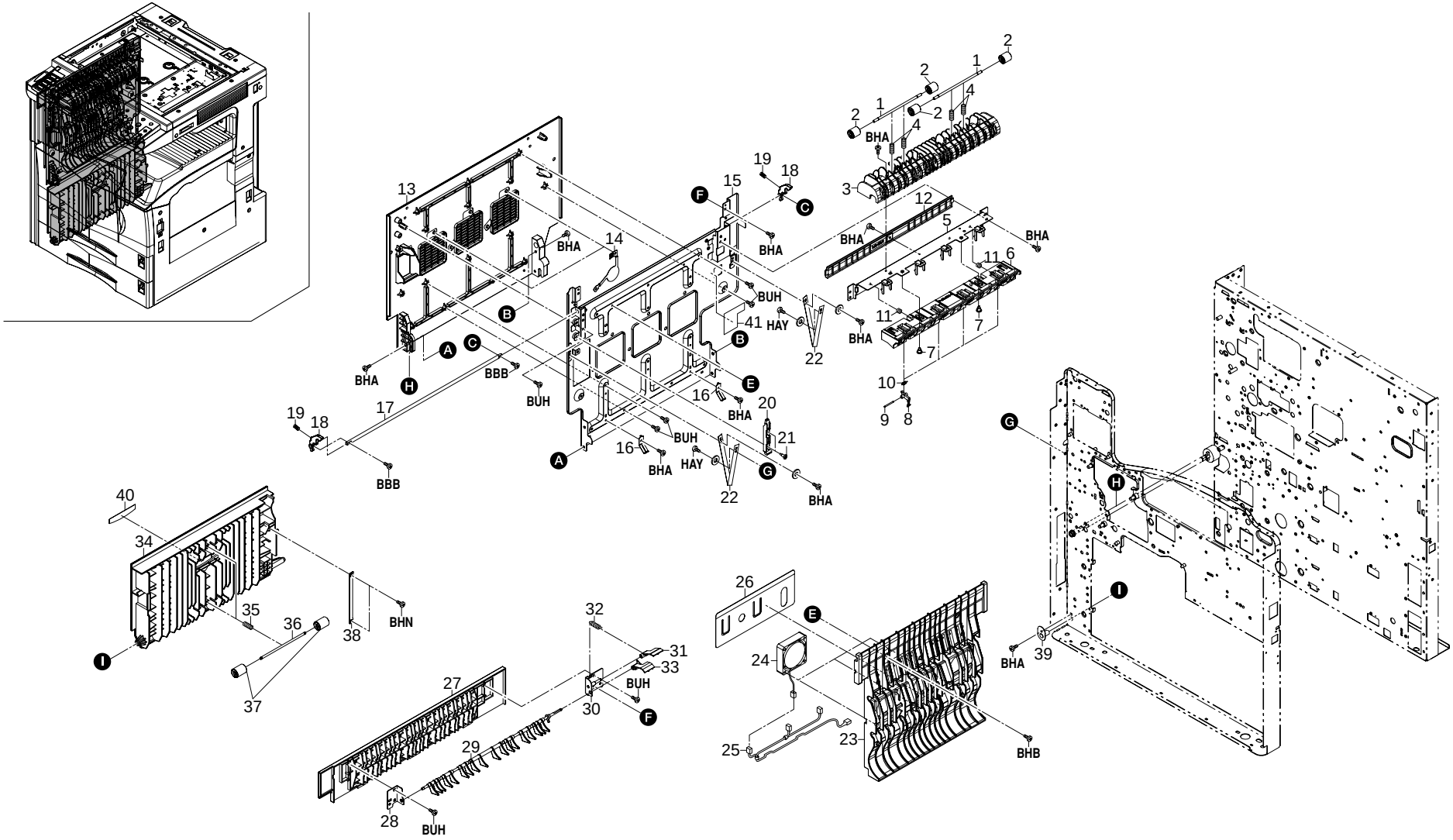
BHA
BBB
BUH
HAY
BHN
BHB

FIG. 6 PAPER FEED-IN SECTION III

SP	Ref. No.	Part. No.	Description	Quantity		
				120V	230V	240V
	1	2BL21360	SHAFT CHANGE PULLEY	2	2	2
◉	2	2BL21330	PULLEY FEED SHIFT	4	4	4
	3	2BL21290	GUIDE EXIT L	1	1	1
	4	2BL21340	SPRING CHANGE PULLEY	4	4	4
	5	2BL20090	MOUNT REAR GUIDE	1	1	1
	6	2BL20100	REAR GUIDE FIXING	1	1	1
	7	34920170	FULCRUM PIN,FIXING	2	2	2
◉	8	36720493	CLAW,PRESS ROLLER	4	4	4
	9	2AR20510	SHAFT,PRESSURE ROLLER SEPARATION CLAW	4	4	4
◉	10	68320310	SPRING,SEPARATION CLAW	4	4	4
	11	65009050	SPRING,DEVELOPING ROCK	2	2	2
	12	2BL21410	GUIDE FEED SHIFT L	1	1	1
◉	13	2BL04510	LEFT COVER MIDDLE 1	1	1	1
	14	2BL23110	GROUND PLATE LEFT FAN	2	2	2
	15	2BL04620	PLATE LEFT COVER M	1	1	1
	16	2BL04700	GROUND PLATE LEFT B	2	2	2
	17	2BL04540	SHAFT L COVER LOCK M	1	1	1
◉	18	2BL04550	LEVER L COVER LOCK M	2	2	2
	19	2BL04560	SPRING L COVER LOCK	2	2	2
	20	2BL04600	LEVER COVER RELEASE	1	1	1
	21	73912281	PIN,ORIGINAL HOLDER	2	2	2
	22	2BL04680	STRAP COVER	2	2	2
	23	2BL21320	GUIDE LEFT COVER M	1	1	1
◉	24	2BL27620	FAN COOLING(60-15)	3	3	3
	25	2BL27300	WIRE CONVEYING FAN	1	1	1
	26	2BL21460	FILM WIRE PROTECT	1	1	1
◉	27	2BJ04510	COVER EXIT L	1	1	1
	28	2BJ04520	FRONT PLATE EXIT L	1	1	1
	29	2BJ21010	GUIDE CHANGE UP	1	1	1
	30	2BJ04530	REAR PLATE EXIT L	1	1	1
◉	31	2BJ21020	LEVER GUIDE CHANGE U	1	1	1
	32	2BJ21030	SPRING CHANGE UP	1	1	1
◉	33	2BJ21040	LEVER CHANGE UP B	1	1	1
◉	34	2BL06100	LEFT COVER FEED	1	1	1
	35	2BL06340	SPRING FEED	2	2	2
	36	2BL06210	SHAFT FEED PULLEY	2	2	2
◉	37	2BL16080	PULLEY FEED	4	4	4
	38	2BL06960	STRAP RELEASE	1	1	1
	39	2AR07540	RETAINING PIN,VERTICAL CONVEYING	1	1	1
◉	40	2BL05050	LAVEL LEFT COVER	1	1	1
	41	2BL05110	LABEL HIGH TEMP	1	1	1

- Parts with "•" are component parts or sub-assemblies of the assembly appearing immediately above them.
- Parts with "◉" indicates the Service parts.
- Parts with "• •" are component parts or sub-assembly with "•" appearing immediately above them.

FIG. 7 PAPER CONVEYING SECTION

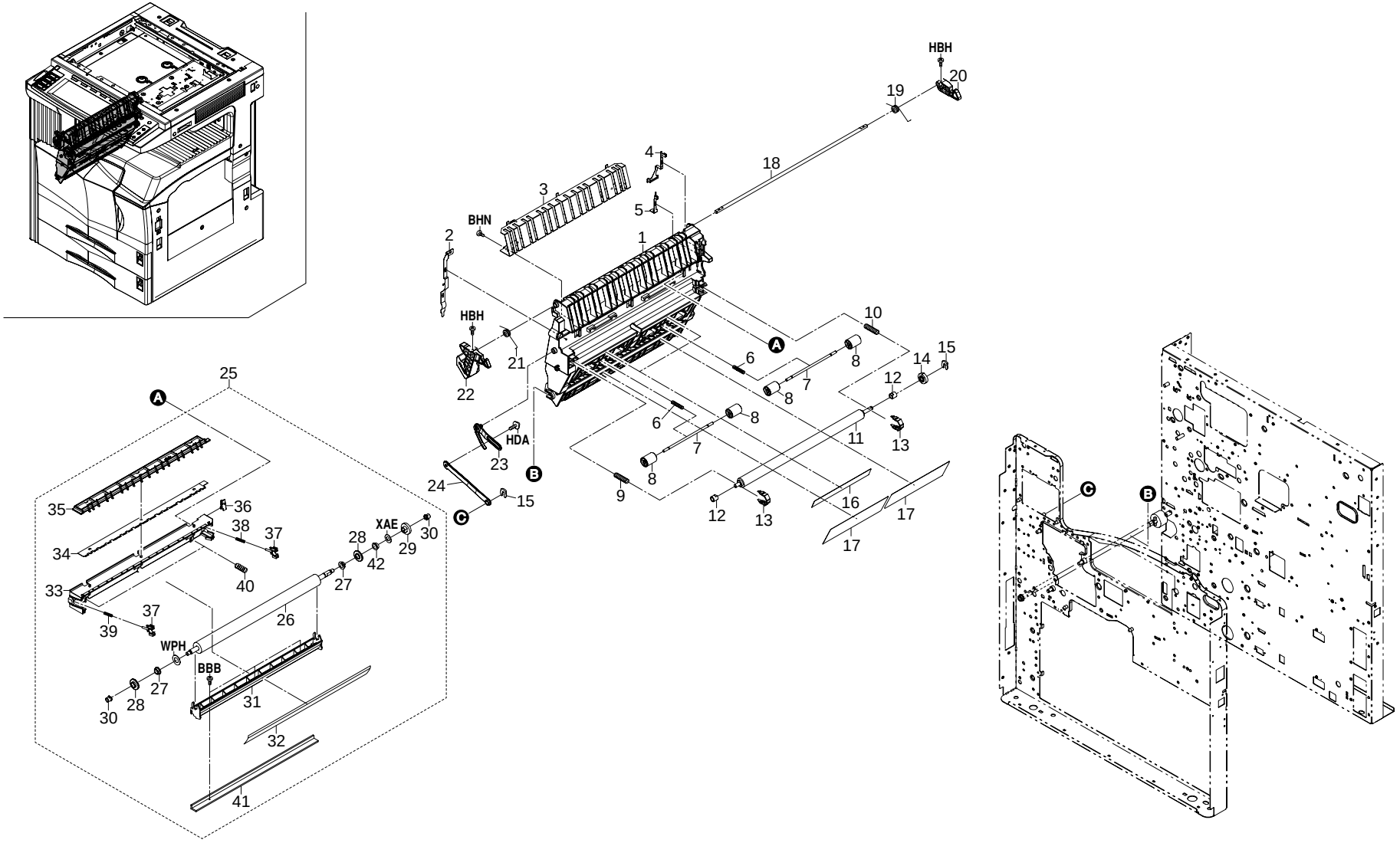

FIG. 7 PAPER CONVEYING SECTION

2BH/2BJ

SP	Ref. No.	Part. No.	Description	Quantity		
				120V	230V	240V
	1	2BL16010	BASE CONVEYING 1	1	1	1
	2	2BL16160	PLATE TRANS UNIT GND	1	1	1
	3	2BL16120	PLATE PAPER GUIDE	1	1	1
	4	2BL16150	PLATE TRANS B	1	1	1
	5	2BL16170	PLATE SEPARATION B	1	1	1
	6	2BL16090	SPRING FEED	2	2	2
	7	2BL16070	SHAFT FEED	2	2	2
◉	8	2BL16080	PULLEY FEED	4	4	4
◉	9	2BL16040	SPRING REGIST F	1	1	1
◉	10	2BL16050	SPRING REGIST R	1	1	1
◉	11	2BL16020	ROLLER REGIST L	1	1	1
◉	12	72107160	BUSHING 6,LOWER REGISTRATION ROLLER	2	2	2
	13	2BL16030	STOPPER BUSH	2	2	2
◉	14	2BL16060	GEAR REGIST Z18	1	1	1
◉	15	34806140	STOPPER 4	2	2	2
◉	16	2BL16130	GUIDE REGIST F	2	2	2
	17	2BL16140	GUIDE FEED F	2	2	2
	18	2BL16210	SHAFT CONVEYING	1	1	1
	19	2BL16240	SPRING CONVEYING B	1	1	1
◉	20	2BL16190	HOOK CONVEYING	1	1	1
	21	2BL16200	SPRING CONVEYING	1	1	1
◉	22	2BL16180	HANDLE CONVEYING	1	1	1
	23	2BL16110	STRAP CONVEYING B	1	1	1
	24	2BL16100	STRAP CONVEYING A	1	1	1
◉	25	5PLPXHLAPKX	TR-700 TRANSFER ASS'Y	1	1	1
◉	26	•2BL17020	ROLLER TRANSFER	1	1	1
◉	27	•2BL17170	BUSHING 8	2	2	2
◉	28	•2BL17040	PULLEY TRANS ROLLER	2	2	2
◉	29	•2BL17090	GEAR TRANS Z25H	1	1	1
◉	30	•2BL17030	COLLAR TRANS ROLLER	2	2	2
	31	•2BL17150	LEFT GUIDE TRANSFER	1	1	1
	32	•2BL17140	SHEET TRANS GUIDE	1	1	1
	33	•2BL17010	HOUSING TRANSFER	1	1	1
◉	34	•2BL17110	BRUSH SEPARATION	1	1	1
	35	•2BL17100	HOLDER SEPARATION	1	1	1
	36	•2BL17050	PLATE TRANS UNIT	1	1	1
◉	37	•2BL17060	BUSH TRANS ROLLER	2	2	2
◉	38	•2BL17080	SPRING TRANS R	1	1	1
◉	39	•2BL17070	SPRING TRANS F	1	1	1
	40	•2BL17180	SPRING LEFT GUIDE	2	2	2
	41	•2BL17190	REINFORCEMENT TRANS	1	1	1
◉	42	•75718040	BUSHING,CLEANING BLADE SHAFT	1	1	1

• Parts with "•" are component parts or sub-assemblies of the assembly appearing immediately above them.
• Parts with "◉" indicates the Service parts.

• Parts with "• •" are component parts or sub-assembly with "•" appearing immediately above them.

FIG. 8 PAPER EXIT SECTION

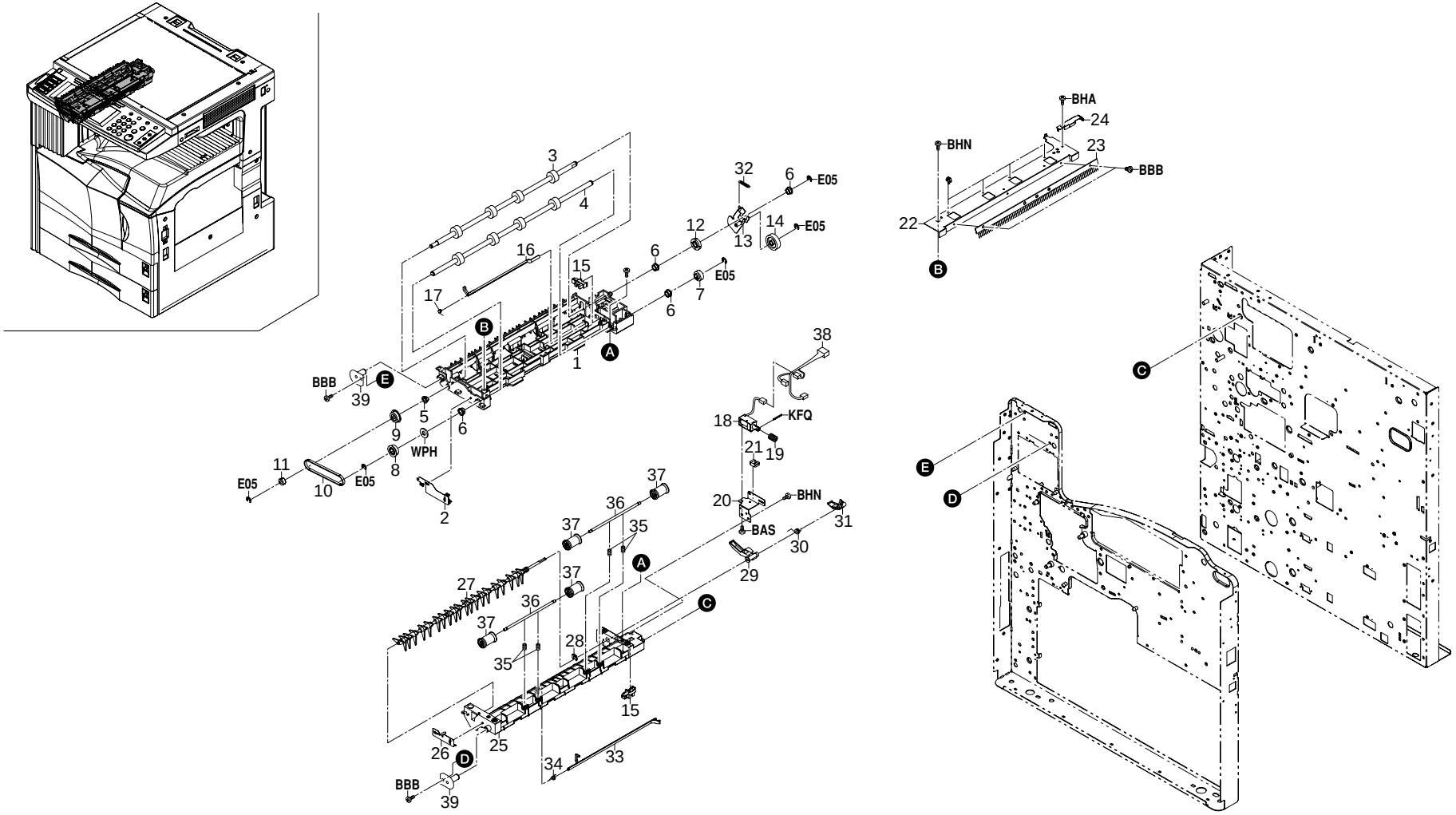

FIG. 8 PAPER EXIT SECTION

SP	Ref. No.	Part. No.	Description	Quantity		
				120V	230V	240V
	1	2BL21040	FRAME EXIT UP	1	1	1
	2	2BL21170	PLATE EARTH EXIT F	1	1	1
◉	3	2BL21030	ROLLER FEED SHIFT	1	1	1
◉	4	2BL21020	ROLLER EXIT	1	1	1
◉	5	73210450	BUSH, 6	1	1	1
◉	6	67322230	BUSHING 8	4	4	4
◉	7	2BL21430	GEAR EXIT Z20	1	1	1
◉	8	2BL21230	PULLEY EXIT T30	1	1	1
◉	9	2BL21210	PULLEY ONEWAY T30	1	1	1
◉	10	2BL21240	BELT EXIT P2M212	1	1	1
	11	2BL22580	COLLAR BELT	1	1	1
◉	12	2BL21220	GEAR EXIT Z19	1	1	1
	13	2BL21200	JOINT EXIT	1	1	1
◉	14	2BL21390	GEAR EXIT JOINT Z26S	1	1	1
◉	15	2BL27450	SWITCH PI	2	2	2
◉	16	2BL21130	ACTUATOR EXIT L	1	1	1
	17	2BL21260	SPRING ACTUATOR L	1	1	1
◉	18	3AZ21890	SOLENOID,FEED SHIFT	1	1	1
◉	19	2BL21440	SPRING EXIT CHANGE	1	1	1
	20	2BL21190	BKT SOLENOID	1	1	1
	21	M2104350	EDGING,EDS-0607M(KITAGAWA)	1	1	1
	22	2BL21160	BKT DISCHARGER	1	1	1
◉	23	34821100	STATIC ELIMINATOR,EJECT	1	1	1
	24	2BL21180	PLATE EARTH EXIT R	1	1	1
	25	2BL21010	FRAME EXIT	1	1	1
	26	2BL21470	PLATE EARTH CHANGE	1	1	1
◉	27	2BL21080	GUIDE EXIT CHANGE	1	1	1
◉	28	34806480	STOPPER 6	1	1	1
	29	2BL21370	LEVER GUIDE CHANGE B	1	1	1
	30	2BL21270	SPRING FEED SHIFT	1	1	1
	31	2BL21100	LEVER GUIDE CHANGE	1	1	1
	32	2BL21400	SPRING EXIT JOINT	1	1	1
◉	33	2BL21120	ACTUATOR EXIT R	1	1	1
	34	2BL21250	SPRING ACTUATOR R	1	1	1
	35	2BL21070	SPRING EXIT PULLEY	4	4	4
	36	2BL21060	SHAFT EXIT PULLEY	2	2	2
	37	2BL21450	PULLEY EXIT B	4	4	4
	38	2BJ27160	WIRE EJECT(C)	1	1	1
	39	2BL21420	PIN EXIT	2	2	2

- Parts with "•" are component parts or sub-assemblies of the assembly appearing immediately above them.
- Parts with "◉" indicates the Service parts.

- Parts with "• •" are component parts or sub-assembly with "•" appearing immediately above them.

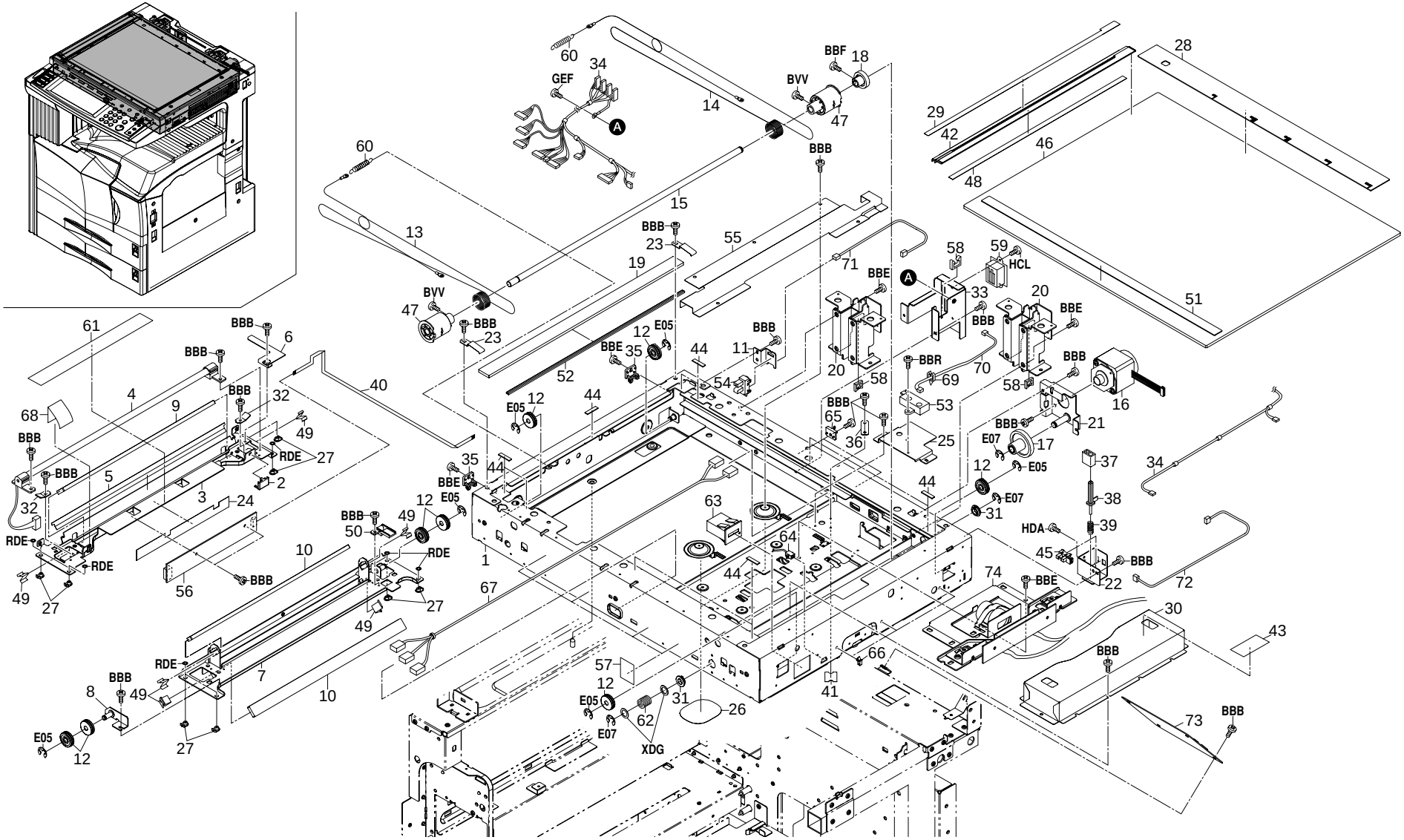
60
34
GEF
A
14
BBF
18
BVV
47
28
29
42
46
48
51
60
15
BBB
13
BBB
23
55
19
71
BBE
A
58
59
HCL
33
20
BBB
BBE
BVV
47
BBB
23
61
BBB
6
BBB
4
9
BBB
32
40
68
BBB
49
RDE
27
BBB
5
2
3
24
32
RDE
RDE
49
27
56
BBB
10
12
E05
35
BBE
44
52
E05
12
44
BBE
35
12
E05
44
11
BBB
20
58
BBR
69
70
BBB
58
16
53
BBB
65
36
25
BBB
21
E07
17
12
E05
37
34
44
E07
38
31
HDA
39
45
BBB
22
72
BBE
74
30
43
BBB
73
BBB
63
64
44
1
67
BBB
50
49
12
E05
RDE
49
27
10
RDE
BBB
8
49
7
10
27
E05
12
57
12
E05
31
26
62
E07
XDG
41
66

FIG. 9 OPTICAL SECTION

2BH/2BJ

SP	Ref. No.	Part. No.	Description	Quantity		
				120V	230V	240V
	1	2AV00010	SCANNER FRAME ASS'Y	1	1	1
	2	2AV12080	GUIDE FFC1	1	1	1
	3	2AV12091	MIRROR FRAME A	1	1	1
◉	4	2AV12100	LAMP,SCANNER	1	1	1
	5	2AV12110	REFLECTOR,SCANNER	1	1	1
	6	2AV12120	LIGHT SHIELD,PI	1	1	1
	7	2AV12130	MIRROR FRAME B	1	1	1
	8	2AV12140	ADJUSTING PLATE B,MIRROR FRAME	1	1	1
◉	9	2AV12150	MIRROR A	1	1	1
◉	10	2AV12160	MIRROR B	2	2	2
	11	2AV12170	MOUNT,SCANNER PI	1	1	1
	12	2AV12180	PULLY,SCANNER	8	8	8
◉	13	2AV12190	FRONT WIRE,SCANNER	1	1	1
◉	14	2AV12200	REAR WIRE,SCANNER	1	1	1
	15	2AV12210	SHAFT,SCANNER DRIVE	1	1	1
◉	16	2AV12221	MOTOR,SCANNER	1	1	1
◉	17	2AV12230	GEAR 44/16	1	1	1
◉	18	2AV12240	GEAR 26	1	1	1
◉	19	2AV12250	CONTACT GLASS,ADF	1	1	1
	20	2AV12260	MOUNT BASE,DF HINGE	2	2	2
	21	2AV12270	MOUNT,SCANNER MOTOR	1	1	1
	22	2AV12290	MOUNT,RELEASE SWITCH	1	1	1
	23	2AV12300	HOLDER,ADF CONTACT GLASS	2	2	2
	24	2AV12320	FILM A,MIRROR FRAME	1	1	1
	25	2AV12340	MOUNT,ORIGINAL DETECTION SENSOR	1	1	1
	26	2AV12430	LOWER SEAL,SCANNER	2	2	2
◉	27	2AV12450	SLIDER,SCANNER	8	8	8
◉	28	2AV12460	REAR ORIGINAL SIZE INDICATOR(METRIC)		1	1
◉	28	2AV12470	REAR ORIGINAL SIZE INDICATOR(INCH)	1		
◉	29	2AV12480	LABEL,ORIGINAL SIZE INDICATOR(METRIC)		1	1
◉	29	2AV12490	LABEL,ORIGINAL SIZE INDICATOR(INCH)	1		
	30	2AV12520	COVER,ISU	1	1	1
◉	31	72914480	REAR BUSHING,DEVELOPING ROLLER (B)	2	2	2
	32	2AV12350	STOPPER,WIRE	2	2	2
	33	2BJ26180	MOUNT DF CONNECTOR	1	1	1
	34	2BJ27020	WIRE DF	1	1	1
	34	2BH27020	WIRE SCANNER	1	1	1
	35	18512340	GUIDE,SCANNER WIRE	2	2	2
	36	2AC12300	HOLDER FFC	1	1	1
	37	2AC12360	GUIDE,RELEASE SWITCH	1	1	1
◉	38	2AC12370	SWITCH,RELEASE DETECTION	1	1	1
	39	2AC12380	SPRING,RELEASE SWITCH	1	1	1
	40	2AR27650	WIRE,INVERTER	1	1	1
	41	2AR12200	FILM,FFC	1	1	1
◉	42	2A305070	LEFT ORIGINAL SIZE INDICATOR	1	1	1
◉	43	2A105180	LABEL,CAUTION CONTACT GLASS	1	1	1
◉	44	29812291	CUSHION,CONTACT GLASS	9	9	9
◉	45	2BL27450	SWITCH PI	1	1	1
◉	46	35912010	CONTACT GLASS	1	1	1
◉	47	35912060	PULLEY,SCANNER DRUM	2	2	2
	48	35912200	STANDARD PLATE,SHADING	1	1	1
	49	35912210	SPRING,MIRROR HOLDER	6	6	6
	50	35912360	GUIDE FFC2	1	1	1
◉	51	35912490	FRONT ORIGINAL SIZE INDICATOR	1	1	1
◉	52	35912531	SPONGE,ORIGINAL SIZE INDICATOR	1	1	1
◉	53	35927290	SENSOR,ORIGINAL DETECTION	1	1	1
◉	54	72127100	PI SWITCH,OPTICAL SECTION	1	1	1
	55	2AV12310	COVER,OPERATION UNIT WIRE	1	1	1
◉	56	2AV28080	INVERTER PCB	1	1	1
	57	2BJ12080	FRONT FILM SCANNER	4	4	4
	58	M2104220	EDGING,EDS-1717U	3	3	3
	59	J0388460	RECEPTACLE,52918-4615(MOLEX)	1	1	1
	60	2AV12500	SPRING,SCANNER TENSION	2	2	2
	61	2AV12600	FILM B,MIRROR FRAME	1	1	1
	62	34918200	SPRING,THRUST	1	1	1
◉	63	2A627490	COUNTER,TOTAL	1	1	1
	64	2BJ27190	WIRE COUNTER	1	1	1
	65	2BJ12030	HOLDER SCANNER PCB	2	2	2
	66	M2109330	WIRE SADDLE,YMC-10-0(KITAGAWA)	3	3	3
	67	2BJ27030	WIRE OPERATION(C)	1	1	1
	68	2AV12610	FILM C,MIRROR FRAME	1	1	1
	69	M2105740	MINIATURE CLAMP,UAMS-05S-2	1	1	1
	70	2BJ27080	WIRE ORIGINAL SENSOR	1	1	1
	71	2AR27520	WIRE,SCANNER SWITCH	1	1	1
	72	2BJ27170	WIRE RELEASE SW	1	1	1
◉	73	2AR93360	PARTS,SCANNER DRIVE PCB(SP)	1	1	1

• Parts with "•" are component parts or sub-assemblies of the assembly appearing immediately above them.
• Parts with "◉" indicates the Service parts.

• Parts with "• •" are component parts or sub-assembly with "•" appearing immediately above them.

FIG. 10 BYPASS UNIT

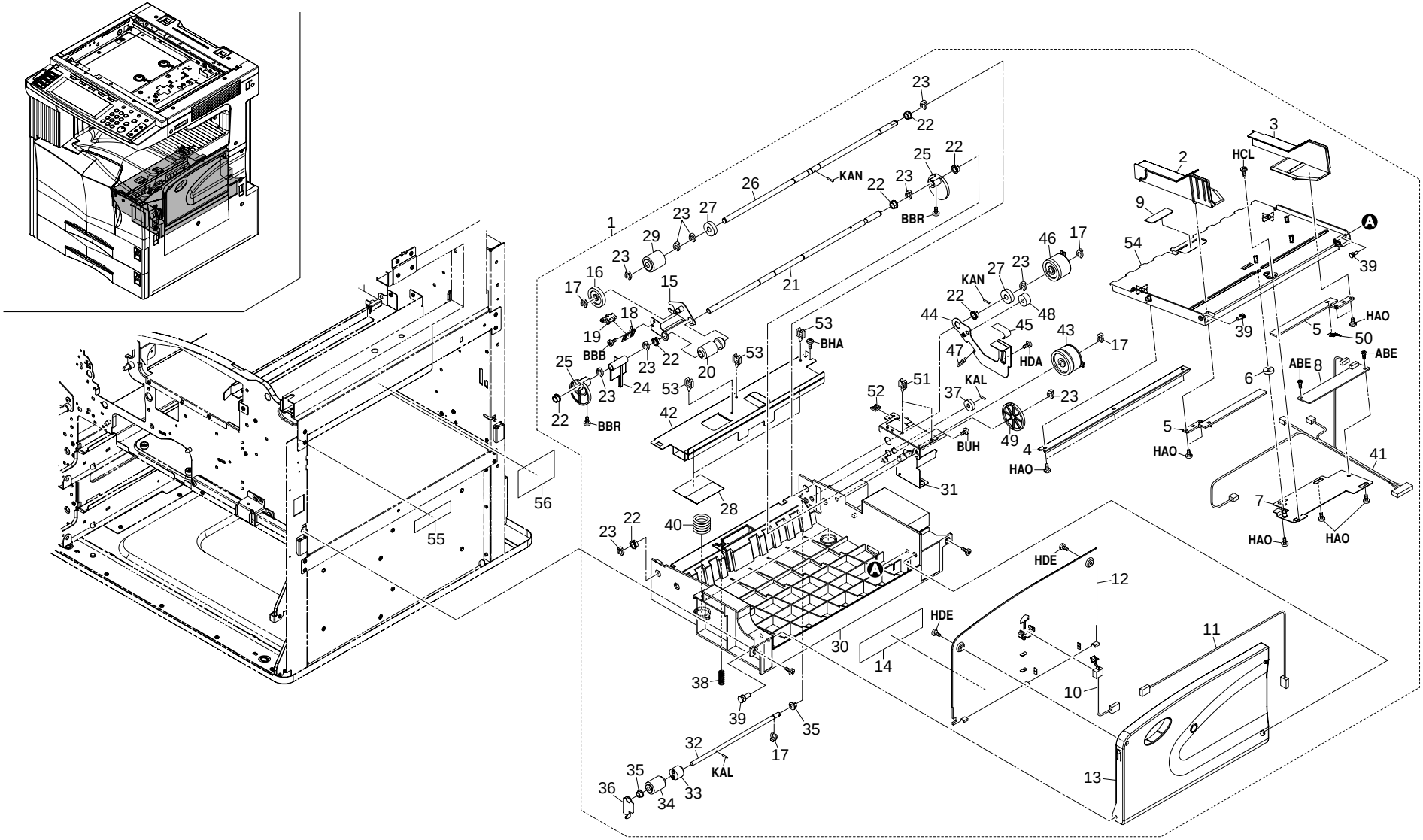

FIG. 10 BYPASS UNIT

SP	Ref. No.	Part. No.	Description	Quantity		
				120V	230V	240V
◉	1	2BL68210	BYPASS UNIT (C)		1	1
◉	1	2BL68250	BYPASS UNIT (I)	1		
	2	•2BL06660	FRONT CURSOR BYPASS	1	1	1
	3	•2BL06670	REAR CURSOR BYPASS	1	1	1
	4	•2BL06650	STAY LIFTPLATE	1	1	1
◉	5	•33907100	RACK,CASSETTE	2	2	2
◉	6	•65914120	GEAR 18,IDLE DEVELOPING	1	1	1
	7	•3A206461	MOUNT,BYPASS PCB	1	1	1
◉	8	•33928111	SIZE DETECTION PCB	1	1	1
	9	•34806490	FRICTION PLATE,BYPASS LEADING FEED	1	1	1
◉	10	•33906990	SWITCH,BYPASS SIZE DETECTION	1	1	1
	11	•2BL27210	WIRE BYPASS TRAY	1	1	1
◉	12	•2BL06610	TABLE BYPASS	1	1	1
◉	13	•2BL06600	COVER BYPASSTRAY	1	1	1
◉	14	•2BL05010	LABEL BYPASSSIZE(C)		1	1
◉	14	•2BL05060	LABEL BYPASSSIZE(I)	1		
	15	•3A206130	JOINT,BYPASS PICKUP	1	1	1
◉	16	•72321350	GEAR 30, FD EJECT IDLE	1	1	1
◉	17	•34806150	STOPPER 5	4	4	4
	18	•3A206210	MOUNT,BYPASS PE SWITCH	1	1	1
◉	19	•2BL27450	SWITCH PI	1	1	1
◉	20	•2AR07240	PULLEY,LEADING FEED	1	1	1
	21	•2BL06760	SHAFT BYPASSCAM	1	1	1
◉	22	•67322230	BUSHING 8	7	7	7
◉	23	•34806480	STOPPER 6	10	10	10
◉	24	•3A206100	ARM,BYPASS PE	1	1	1
◉	25	•2BL06680	CAM BYPASS	2	2	2
	26	•2BL06770	SHAFT BYPASS	1	1	1
◉	27	•45729416	GEAR,TONER ROLLER	2	2	2
	28	•2BL06880	FILM BYPASS	2	2	2
◉	29	•61706770	UPPER PULLEY,BYPASS	1	1	1
	30	•2BL06510	BASE BYPASSUNIT(1)	1	1	1
	31	•2BL06690	MOUNT BYPASSDRIVE	1	1	1
	32	•2BL06750	SHAFT RETARD	1	1	1
◉	33	•33906430	TORQUE LIMITER,BYPASS	1	1	1
◉	34	•2AR07230	PULLEY,SEPARATION	1	1	1
◉	35	•73210450	BUSH, 6	2	2	2
	36	•3A206170	HOLDER,RETARD	1	1	1
◉	37	•66006810	GEAR,16 BYPASS PULLEY	1	1	1
	38	•2BL06860	SPRING RETARD	1	1	1
◉	39	•66007310	PIN,CASSETTE WORK PLATE	3	3	3
	40	•34907380	SPRING,CASSETTE	2	2	2
	41	•2BL27150	WIRE BYPASS UNIT	1	1	1
	42	•2BL06530	COVER BYPASSUNIT	1	1	1
◉	43	•2AV27330	CLUTCH,PAPER FEED	1	1	1
	44	•2BL06850	JOINT RETARD	1	1	1
	45	•2BL05040	LABEL RETARD	1	1	1
◉	46	•2BL27500	CLUTCH FEED	1	1	1
	47	•2BL06870	SPRING JOINTRETARD	1	1	1
◉	48	•33906160	GEAR 16,PAPER FEED	1	1	1
◉	49	•2BL06720	GEAR 55/15	1	1	1
	50	•33907110	TERMINAL,PAPER SIZE PCB	1	1	1
	51	•M2105740	MINIATURE CLAMP,UAMS-05S-2	2	2	2
	52	•M2104210	EDGING,EDS-2	1	1	1
	53	•M2109370	WIRE SADDLE,RLWS-1515T V0(KITAGAWA)	3	3	3
	54	•2BL06640	LIFTPLATE BYPASS	1	1	1
	55	3A205010	LABEL,CAUTION GEAR	1	1	1
	56	2BL05100	LABEL BYPASS JAM R	1	1	1

• Parts with "•" are component parts or sub-assemblies of the assembly appearing immediately above them.
• Parts with "◉" indicates the Service parts.

• Parts with "• •" are component parts or sub-assembly with "•" appearing immediately above them.

FIG. 11 BYPASS FEED UNIT

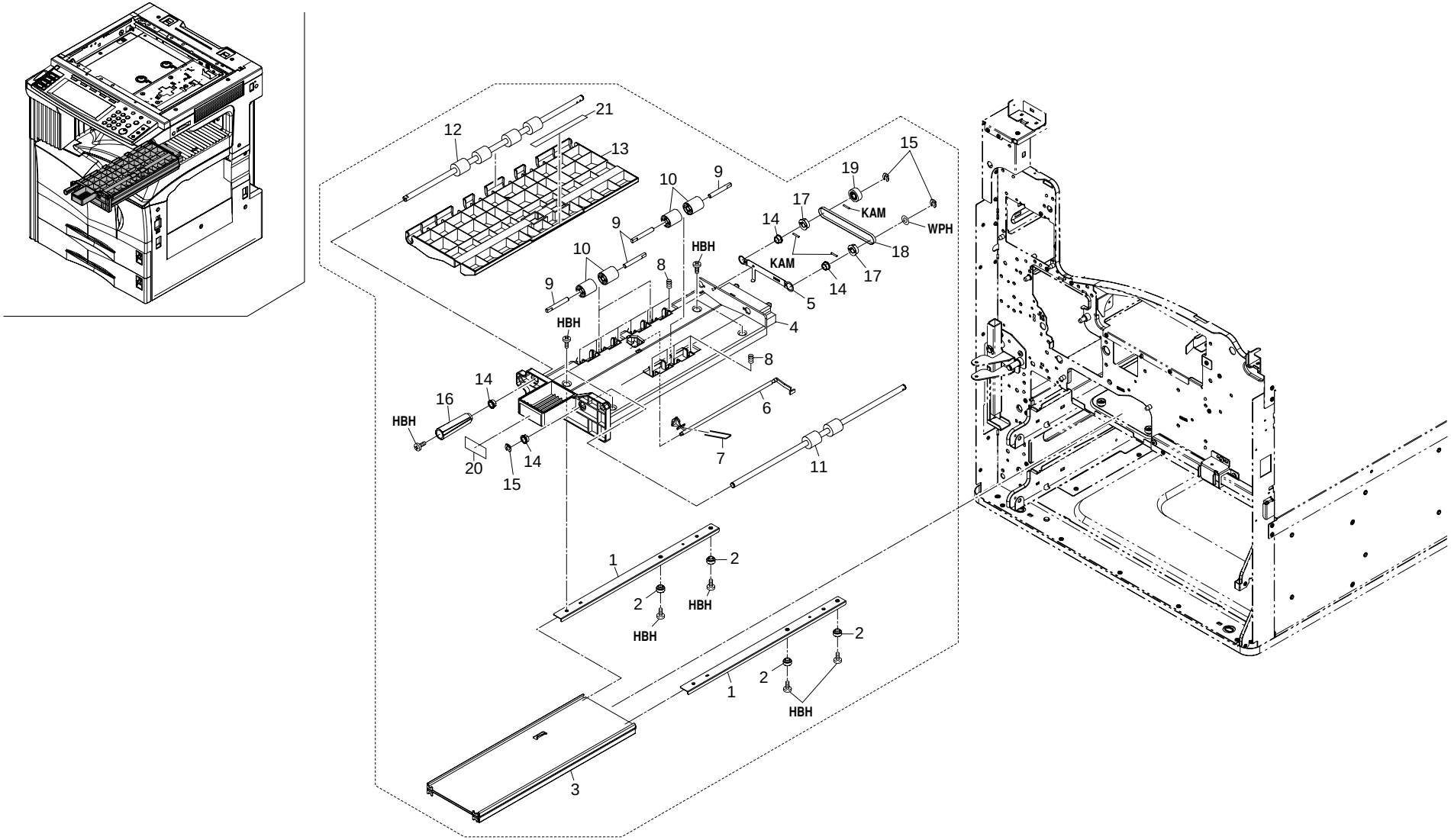

FIG. 11 BYPASS FEED UNIT

SP	Ref. No.	Part. No.	Description	Quantity		
				120V	230V	240V
◉		2BL68140	BYPASS FEED UNIT	1	1	1
	1	•2BL06570	MOUNT RAIL	2	2	2
	2	•2BL06590	PULLEY RAIL	4	4	4
	3	•2BL06580	RAIL BYPASS	1	1	1
	4	•2BL06500	BASE BYPASSFEED(1)	1	1	1
	5	•2BL06790	GROUNDPLATE BYPASS	1	1	1
◉	6	•2BL06730	ACTUATOR BYPASSFEED	1	1	1
◉	7	•2BL06800	SPRING BYPASS	1	1	1
	8	•2BL06780	SPRING BYPASSFEED	12	12	12
	9	•2BL06740	SHAFT BYPASSFEED	6	6	6
◉	10	•33906660	RIGHT PULLEY,FEED	6	6	6
◉	11	•2BL06540	ROLLER2 BYPASSFEED	1	1	1
◉	12	•2BL06560	ROLLER4 BYPASSFEED	1	1	1
	13	•2BL06520	UPPERGUIDE BYPASS	1	1	1
◉	14	•67322230	BUSHING 8	4	4	4
◉	15	•34806480	STOPPER 6	3	3	3
	16	•2BL06830	DIAL BYPASSFEED	1	1	1
◉	17	•2BL06820	PULLEY25 BYPASSFEED	2	2	2
◉	18	•2BL06810	BELT BYPASSFEED	1	1	1
◉	19	•36722860	GEAR 18	1	1	1
	20	•2BL05020	FRONT LABEL BYPASS	1	1	1
	21	•2BL05030	UPPER LABEL BYPASS	1	1	1

• Parts with "•" are component parts or sub-assemblies of the assembly appearing immediately above them.
• Parts with "◉" indicates the Service parts.

• Parts with "• •" are component parts or sub-assembly with "•" appearing immediately above them.

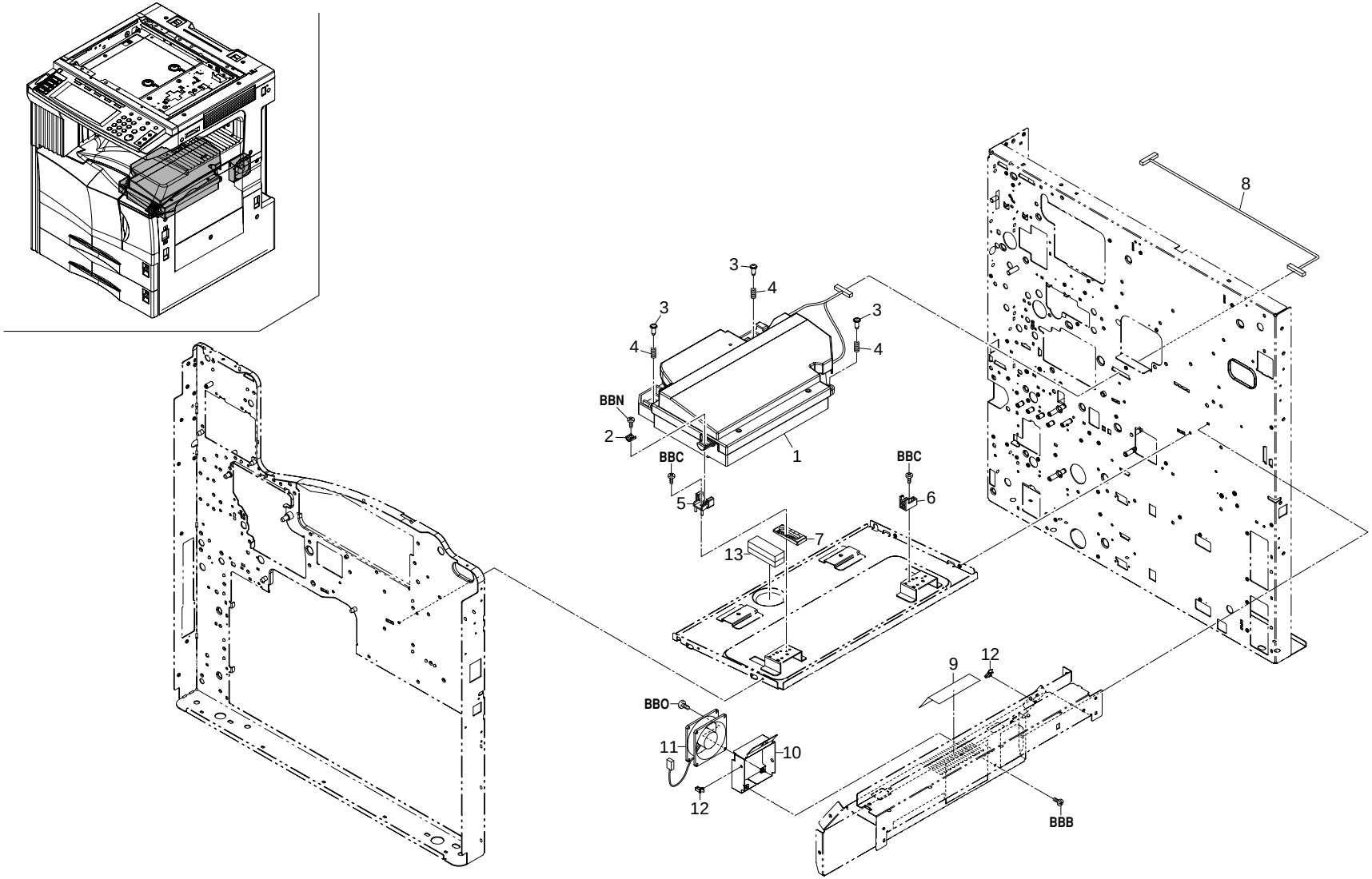
1
2
3
4
5
6
7
8
9
10
11
12
13
BBC
BBN
BBO
BBB

FIG. 12 LASER SCANNER UNIT

SP	Ref. No.	Part. No.	Description	Quantity		
				120V	230V	240V
◉	1	5PLPXHNAPKX	LK-700 SCANNER UNIT	1	1	1
	2	2BL13120	FRONT MOUNT HOUSING	1	1	1
	3	76610320	PIN TENSION PULLEY	3	3	3
	4	2BL13290	SPRING FIX LSU	3	3	3
	5	2BL13070	FRONT ADJUSTING LSU	1	1	1
	6	2BL13060	REAR ADJUSTING LSU	1	1	1
	7	2BL13250	ADJUSTING PLT LSU	1	1	1
	8	2BJ27200	WIRE LSU(C)	1	1	1
	9	2BL23090	FILTER DUST SHIELD	1	1	1
	10	2BL02230	MOUNT FAN	1	1	1
◉	11	2BL27700	FAN COOLING(60-25)	1	1	1
	12	M2109330	WIRE SADDLE,YMC-10-0(KITAGAWA)	2	2	2
	13	2BL27690	SHEET RADIATOR(LSU)	2	2	2

• Parts with "•" are component parts or sub-assemblies of the assembly appearing immediately above them.
• Parts with "◉" indicates the Service parts.

• Parts with "• •" are component parts or sub-assembly with "•" appearing immediately above them.

FIG. 13 DEVELOPING SECTION

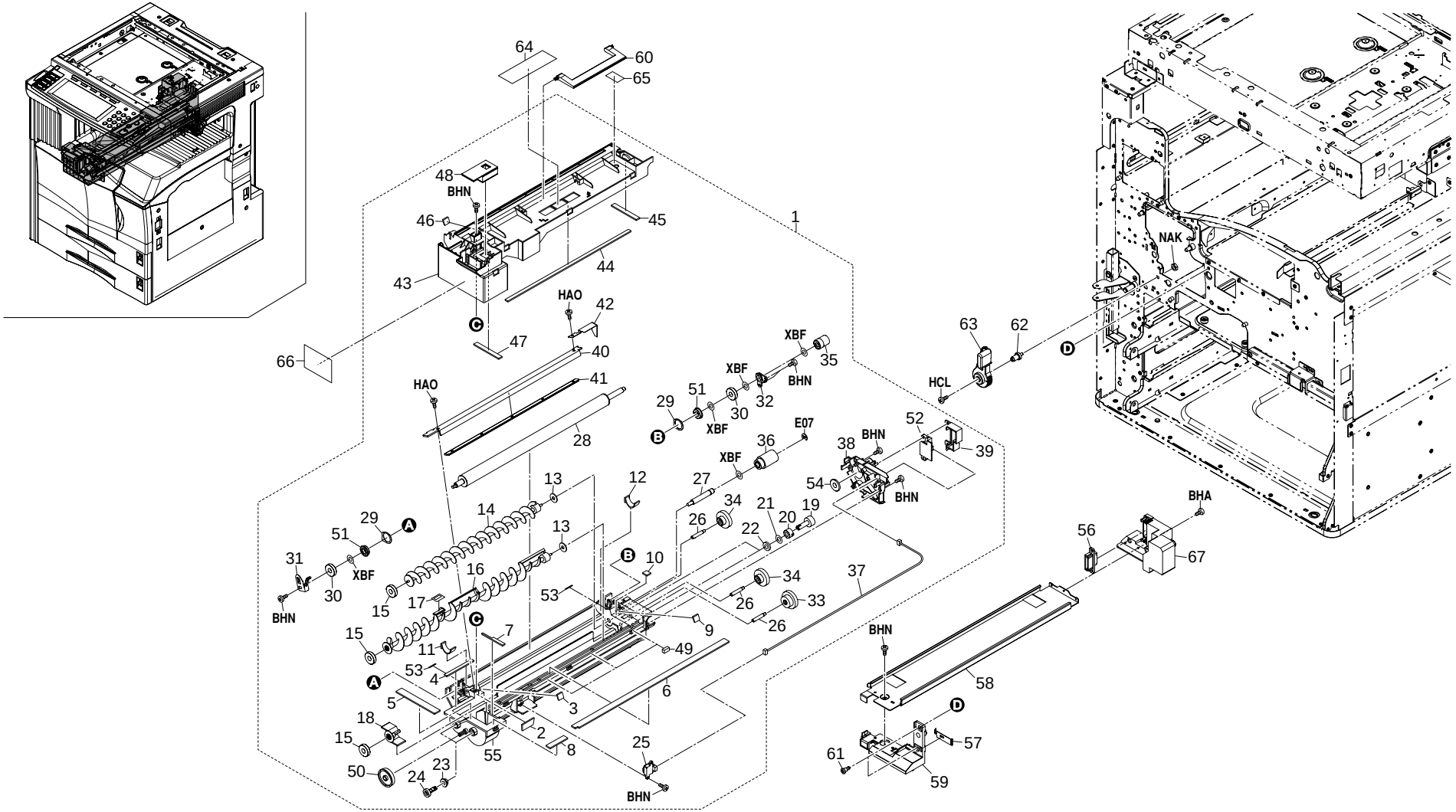

FIG. 13 DEVELOPING SECTION

SP	Ref. No.	Part. No.	Description	Quantity		
				120V	230V	240V
◉	1	2BJ93010	DEVELOPER ASSY	1	1	1
	2	•2BL14760	SEAL CASE LB	1	1	1
	3	•2BL14770	SEAL CASE LC	1	1	1
	4	•2BL14720	SEAL CASE LA	1	1	1
	5	•2BL14730	SEAL CASE FA	1	1	1
	6	•2BL14750	SEAL CASE RB	1	1	1
	7	•2BL14790	SEAL CASE FB	1	1	1
	8	•2BL14740	SEAL CASE RA	1	1	1
	9	•2BL14780	SEAL CASE LD	1	1	1
	10	•2BL14820	SEAL CASE LE	1	1	1
	11	•2BL14280	FRONT SEAL DLP	1	1	1
	12	•2BL14290	REAR SEAL DLP	1	1	1
	13	•2BL14710	SEAL AGITATOR	2	2	2
	14	•2BL14460	SPIRAL D DLP	1	1	1
	15	•2A873520	SEAL SCRAPER	3	3	3
	16	•2BL14470	SPIRAL E DLP	1	1	1
	17	•2BL14320	FILM SENSOR	1	1	1
	18	•2BL14090	SPIRAL C DLP	1	1	1
	19	•2BL14620	GEAR SCRAPER Z18S	2	2	2
	20	•2BL14610	BUSH SCRAPER	2	2	2
	21	•2BL14700	SEAL SCRAPER MID	2	2	2
	22	•2BL14690	SEAL SCRAPER	2	2	2
	23	•49028116	BUSHING 6,CLEANING UNIT	2	2	2
	24	•2BL14370	GEAR Z15	2	2	2
	25	•33915180	TONER EMPTY DETECTION SENSOR	1	1	1
	26	•2BL14150	SHAFT A DLP	3	3	3
	27	•2BL14160	SHAFT B DLP	1	1	1
	28	•2BL14010	ROLLER MAGNET	1	1	1
	29	•2BL14390	PLATE MAGNET ROLLER	2	2	2
	30	•2BL14670	PULLEY DLP ASSY	2	2	2
	31	•2BL14120	GROUND PLATE A DLP	1	1	1
	32	•2BL14260	FRANGE MAGNET ROLLER	1	1	1
	33	•2BL14640	GEAR Z36S-Z23S	1	1	1
	34	•2BL14630	GEAR Z34S-Z16S	2	2	2
	35	•2BL14340	GEAR 17H	1	1	1
	36	•2BL14110	GEAR 23/18	1	1	1
	37	•2BL27110	WIRE DEVELOPING	1	1	1
	38	•2BL14050	REAR COVER DLP	1	1	1
	39	•2BL14060	COVER DROWER DLP	1	1	1
	40	•2BL14030	BLADE DLP	1	1	1
	41	•2BL14600	MAGNET BLADE	1	1	1
	42	•2BL14130	GROUND PLATE B DLP	1	1	1
	43	•2BL14040	UPPER COVER DLP	1	1	1
	44	•2BL14430	SEAL UPPER COVER B	1	1	1
	45	•2BL14440	SEAL UPPER COVER C	1	1	1
	46	•2BL14800	SEAL UPPER COVER D	1	1	1
	47	•2BL14420	SEAL UPPER COVER A	1	1	1
	48	•2BL14810	SEAL SHUTTER C	1	1	1
	49	•2BL14480	SEAL WIRE	3	3	3
	50	•2BL14650	GEAR Z36	1	1	1
	51	•2BL14450	BEARING MAGNETROLLER	2	2	2
	52	•2BJ01050	PCB DEVE ASS'Y(C)	1	1	1
	53	•2BL14400	SPACER SEAL	2	2	2
	54	•2BL14540	SPACER MAG ROLLER	1	1	1
	55	•2BL14020	CASE DLP	1	1	1
	56	J7340100	RECEPTACLE,9715S-10A(IRS)	1	1	1
	57	2BL14350	GROUND PLATE RAIL	1	1	1
	58	2BL14200	RAIL DLP	1	1	1
	59	2BL14180	FRONT ARM RAIL	1	1	1
	60	2BL14170	HANDLE DLP	1	1	1
	61	2BL14660	STUD SCREW S	2	2	2
	62	2BL14220	PIN LEVER DLP	1	1	1
	63	2BL14210	LEVER DLP	1	1	1
	64	2BL14490	FILM UPPER COVER A	1	1	1
	65	2BL14500	FILM UPPER COVER B	1	1	1
	66	2BL05090	LABEL BYPASS JAM F	1	1	1
	67	2BL14190	REAR ARM RAIL	1	1	1

• Parts with "•" are component parts or sub-assemblies of the assembly appearing immediately above them.
• Parts with "◉" indicates the Service parts.

• Parts with "• •" are component parts or sub-assembly with "•" appearing immediately above them.

FIG. 14 FIXING SECTION

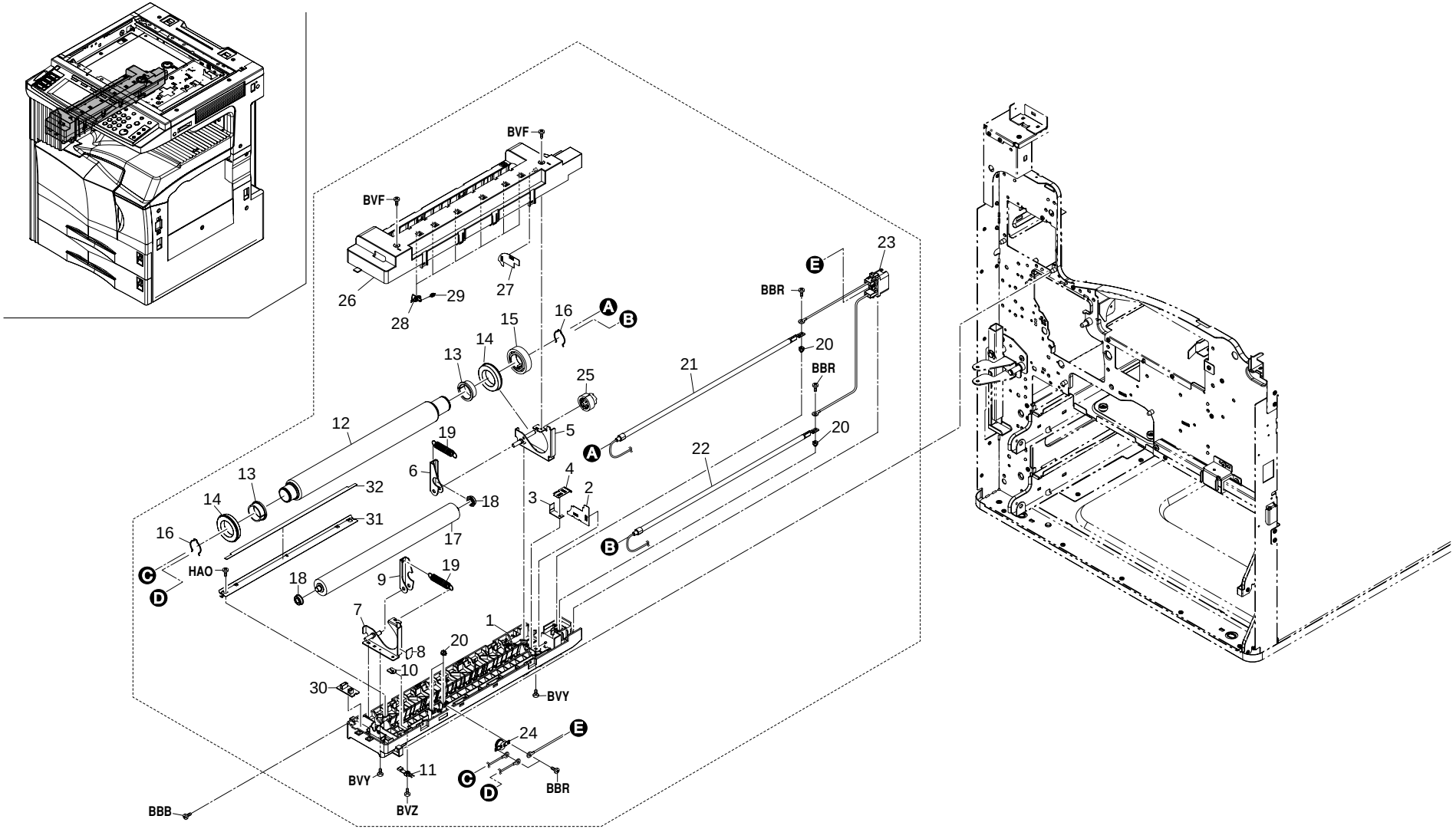

FIG. 14 FIXING SECTION

SP	Ref. No.	Part. No.	Description	Quantity		
				120V	230V	240V
◉		2BJ93040	FIXING ASSY 120	1		
◉		2BJ93050	FIXING ASSY 230		1	1
	1	•2BL20020	LOWER FRAME FIXING	1	1	1
	2	•2BL20310	LOWER COVER FRAME	1	1	1
	3	•34820310	STATIC ELIMINATOR,HEAT ROLLER	1	1	1
	4	•2BL20230	PLATE SPRING FIXING	1	1	1
	5	•2BL20040	REAR FRAME FIXING	1	1	1
	6	•2BL20180	REAR PRESSING PLATE	1	1	1
	7	•2BL20030	FRONT FRAME FIXING	1	1	1
	8	•2BL20290	COVER FIXING WIRE	1	1	1
	9	•2BL20170	FRONT PRESSING PLATE	1	1	1
	10	•2BL20210	MOUNT THERMISTOR	1	1	1
◉	11	•2BL20270	THERMISTOR FIXING	1	1	1
◉	12	•2BK20010	ROLLER HEAT	1	1	1
	13	•33420220	BUSHING,HEAT ROLLER	2	2	2
◉	14	•33420210	BEARING,HEAT ROLLER	2	2	2
◉	15	•2BL20070	GEAR 55 HEAT ROLLER	1	1	1
	16	•2BL20200	STOPPER HEAT ROLLER	2	2	2
◉	17	•2BL20060	ROLLER PRESS	1	1	1
◉	18	•35920130	BEARING,PRESSURE	2	2	2
	19	•2BK20020	SPRING PRESSURE	2	2	2
	20	•2BM20420	NUT FUSER	4	4	4
◉	21	•2BL20130	HEATER M120 FIXING	1		
◉	21	•2BL20150	HEATER M230 FIXING		1	1
◉	22	•2BL20140	HEATER S120 FIXING	1		
◉	22	•2BL20160	HEATER S230 FIXING		1	1
	23	•2BL27130	WIRE FIXING UNIT	1	1	1
◉	24	•2BL20280	THERMOSTAT 190 FIXING	1	1	1
◉	25	•2BL20260	GEAR FIXING Z33	1	1	1
◉	26	•2BL20010	UPPER FRAME FIXING	1	1	1
	27	•2BL20300	UPPER COVER FRAME	1	1	1
◉	28	•2BL20080	CLAW HEAT ROLLER	6	6	6
◉	29	•2BL20240	SPRING CLAW	6	6	6
	30	•2BJ01060	PCB FIXING ASS'Y(C)	1	1	1
	31	•2BL20320	HOLDER PRESS SE	1	1	1
	32	•2BL20330	STATIC ELIMINATOR PRESS	1	1	1

• Parts with "•" are component parts or sub-assemblies of the assembly appearing immediately above them.
• Parts with "◉" indicates the Service parts.

• Parts with "• •" are component parts or sub-assembly with "•" appearing immediately above them.

FIG. 15 CLEANING SECTION

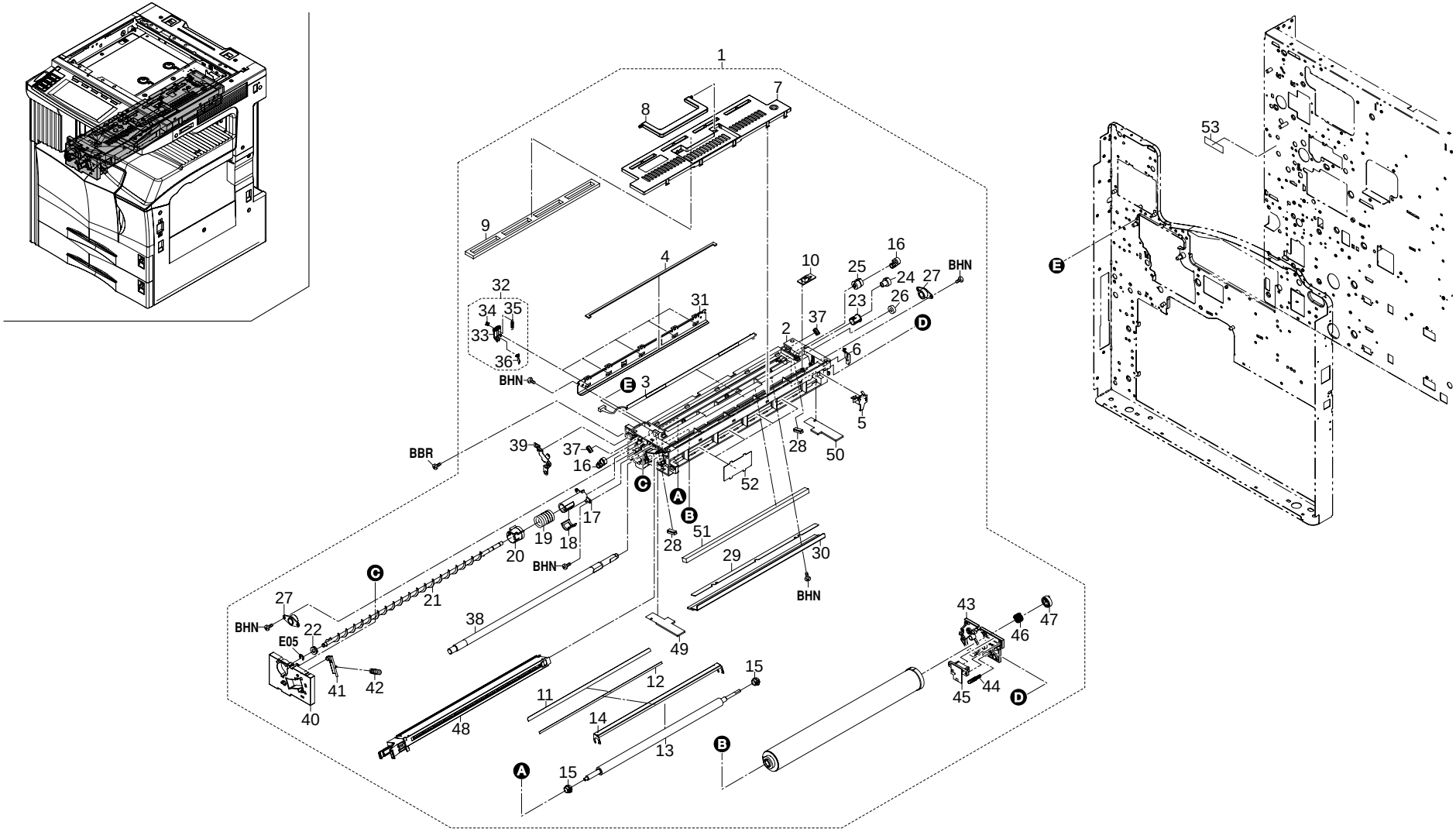

FIG. 15 CLEANING SECTION

SP	Ref. No.	Part. No.	Description	Quantity		
				120V	230V	240V
◉	1	2BJ93020	DRUM ASSY	1	1	1
	2	•2BL18010	HOUSING DRUM	1	1	1
◉	3	•2BL68190	LAMP CLEANING ASSY	1	1	1
◉	4	•2BL18560	SPONGE LOWER SEAL	1	1	1
	5	•2BL18140	TERMINAL CHARGER PCB	1	1	1
	6	•2BL18130	TERMINAL DRUM PCB	1	1	1
	7	•2BL18040	UPPER COVER DRUM	1	1	1
◉	8	•2BL18320	HANDLE DRUM	1	1	1
	9	•2BL18550	UPPER SEAL CLEANING	1	1	1
	10	•2BL01080	PCB ZENER ASS'Y	1	1	1
	11	•2BL18620	SCRAPER CL ROLLER A	1	1	1
	12	•2BL18710	TAPE SCRAPER	1	1	1
	13	•2BL18080	ROLLER CLEANING	1	1	1
	14	•2BL18530	HOLDER SCRAPER	1	1	1
	15	•2BL18520	BUSHING CL ROLLER A	2	2	2
	16	•2BL18650	ARM CL ROLLER A	2	2	2
	17	•2BL18250	HOLDER SHUTTER	1	1	1
	18	•2BL18600	SEAL SHUTTER	1	1	1
	19	•2BL18260	SPRING SHUTTER	1	1	1
	20	•2BL18240	SHUTTER DISPOSAL	1	1	1
	21	•2BL18060	SPIRAL CLEANING	1	1	1
	22	•63818250	REAR BUSHING,TONER DISPOSAL ROLLER	1	1	1
	23	•2BL18450	REAR BUSHING SPIRAL	1	1	1
◉	24	•2BL18160	GEAR SPIRAL 16	1	1	1
◉	25	•2BL18150	GEAR CL ROLLER 16/15	1	1	1
◉	26	•2BL18170	GEAR IDLE 15	1	1	1
◉	27	•2BL18630	BUSHING DRUM A	2	2	2
	28	•2BL18570	SPONGE DRUM	2	2	2
	29	•2BL18730	SPACER BLADE	1	1	1
◉	30	•2BL18300	BLADE CLEANING	1	1	1
◉	31	•2BL18070	LOWER SEAL CLEANING	1	1	1
◉	32	•2BL68040	CLAW SEPARATION ASSY	5	5	5
	33	••2BL18270	HOLDER CLAW	5	5	5
	34	••2AR18260	PULLEY,CLAW SEPARATION	5	5	5
	35	••2AR18240	CLAW,SEPARATION	5	5	5
	36	••2AR18280	SPRING,CLAW SEPARATION	5	5	5
	37	•2BL18760	SPRING CLEANING ARM	2	2	2
	38	•2BL18690	SHAFT DRUM A	1	1	1
	39	•2BL18660	GND PLATE DRUM A	1	1	1
	40	•2BL18020	FRONT COVER DRUM	1	1	1
	41	•2BL18460	LEVER MC	1	1	1
	42	•2BL18470	SPRING MC LOCK	1	1	1
	43	•2BL18030	REAR COVER DRUM	1	1	1
	44	•2BL18190	SPRING DRUM	1	1	1
	45	•2BJ01040	PCB DRUM ASS'Y(C)	1	1	1
	46	•2BL18750	SPRING DRUM JOINT	1	1	1
	47	•2BL18740	JOINT DRUM	1	1	1
◉	48	•2BL93090	MC-700 MAIN CHARGER	1	1	1
	49	•2BL18200	FRONT SEAL DRUM	1	1	1
	50	•2BL18210	REAR SEAL DRUM	1	1	1
	51	•2BL18770	SPONGE BLADE	1	1	1
	52	•2BL18700	RIGHT FILM DRUM	4	4	4
	53	2BL05080	LABEL DRUM	1	1	1

• Parts with "•" are component parts or sub-assemblies of the assembly appearing immediately above them.
• Parts with "◉" indicates the Service parts.

• Parts with "• •" are component parts or sub-assembly with "•" appearing immediately above them.

FIG. 16 DRIVING, COOLING SECTION I

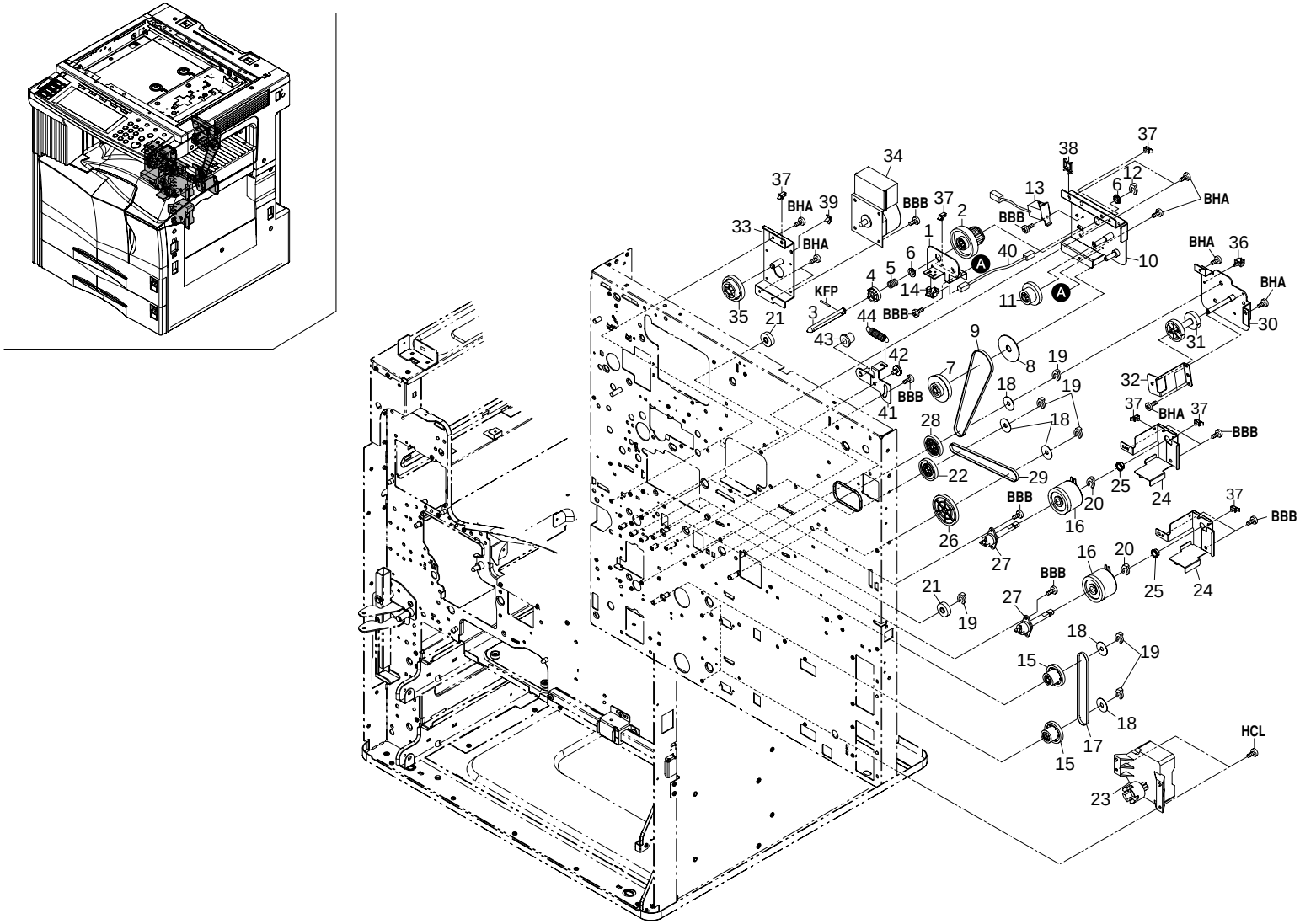

FIG. 16 DRIVING, COOLING SECTION I

2BH/2BJ

SP	Ref. No.	Part. No.	Description	Quantity		
				120V	230V	240V
	1	2BL22450	PLATE DRIVE CONT.B	1	1	1
◉	2	2BL22520	CLUTCH CONTAINER	1	1	1
	3	2BL22460	SHAFT DRIVE CONT	1	1	1
◉	4	2BJ22010	COUPLING CONTAINER B	1		
◉	4	2BL22500	COUPLING CONTAINER		1	1
◉	5	2BL22510	SPRING DRIVE CONT.	1	1	1
◉	6	2BL22570	BUSH DRIVE CONT 8	2	2	2
◉	7	2BL22480	GEAR Z24S-P40	1	1	1
◉	8	2BL22560	PULLEY CONT. DRIVE	1	1	1
◉	9	2BL22590	BELT DRIVE CONTAINER	1	1	1
	10	2BL22440	PLATE DRIVE CONT.A	1	1	1
◉	11	2BL22490	GEAR Z40S-Z25S	1	1	1
◉	12	34806480	STOPPER 6	1	1	1
◉	13	2BL27510	SOLENOID TONER	1	1	1
◉	14	35927420	SWITCH,SIZE	1	1	1
◉	15	2BL22330	GEAR Z41S-Z24S-P30	2	2	2
◉	16	2BL27500	CLUTCH FEED	2	2	2
◉	17	2BL22350	BELT DRIVE FEED	1	1	1
	18	2BL22580	COLLAR BELT	5	5	5
◉	19	34806140	STOPPER 4	8	8	8
◉	20	34806150	STOPPER 5	2	2	2
◉	21	5NVG137DB025	GEAR M FEED Z25	4	4	4
◉	22	2BL22530	GEAR Z41S-P15	1	1	1
◉	23	2BL27580	LIFT MOTOR	2	2	2
	24	2BL22360	BRACKET CLUTCH FEED	2	2	2
◉	25	67322230	BUSHING 8	2	2	2
◉	26	2BL22540	GEAR Z60S-P20	1	1	1
◉	27	2AR00170	PRIMARY PAPER FEED BUSHING ASS'Y	2	2	2
◉	28	2BL22420	GEAR Z41S-P18	1	1	1
◉	29	2BL22400	BELT DRIVE MPF	1	1	1
	30	2BL22370	PLATE DRIVE MPF A	1	1	1
◉	31	2BL22550	GEAR Z40S-Z32S	1	1	1
	32	2BL22380	PLATE DRIVE MPF B	1	1	1
	33	2BL22310	PLATE DRIVE FEED	1	1	1
◉	34	2BL27550	MOTOR SUB	1	1	1
◉	35	2BL22320	GEAR Z76H-Z35S	1	1	1
	36	M2105740	MINIATURE CLAMP,UAMS-05S-2	1	1	1
	37	M2109330	WIRE SADDLE,YMC-10-0(KITAGAWA)	6	6	6
	38	M2109010	WIRE SADDLE,WS-2NS	1	1	1
	39	M2108080	SPACER,KGPS-3S	1	1	1
	40	2BL27180	WIRE CONT SW	1	1	1
	41	2BL22810	PLATE TENSION A	1	1	1
	42	72114320	PIN,DEV.UNIT HANDLE	1	1	1
	43	2BL22830	PULLEY TENSION	1	1	1
	44	2BL22820	SPRING PULLEY	1	1	1

• Parts with "•" are component parts or sub-assemblies of the assembly appearing immediately above them.
• Parts with "◉" indicates the Service parts.

• Parts with "• •" are component parts or sub-assembly with "•" appearing immediately above them.

FIG. 17 DRIVING, COOLING SECTION II

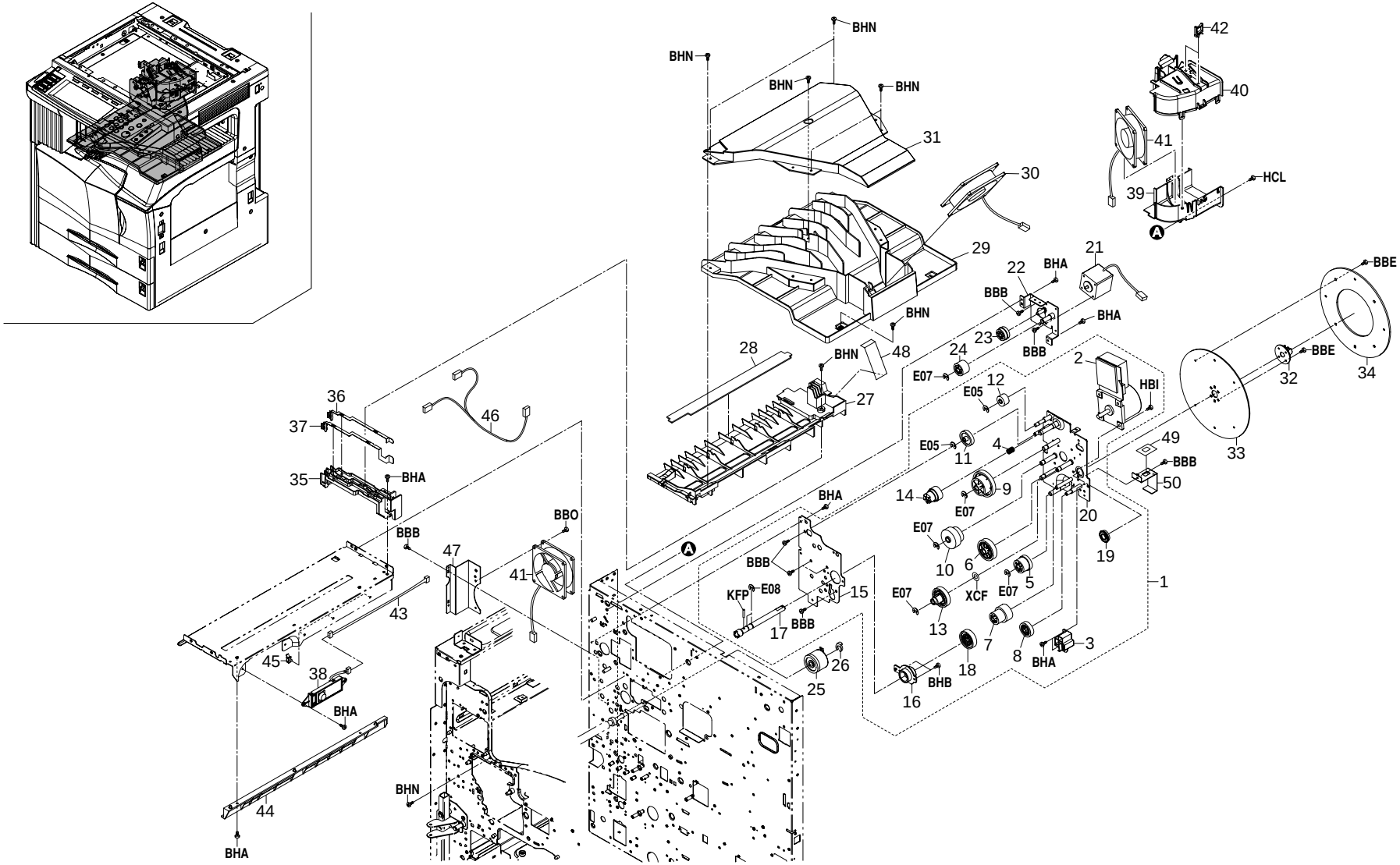

FIG. 17 DRIVING, COOLING SECTION II

2BH/2BJ

SP	Ref. No.	Part. No.	Description	Quantity		
				120V	230V	240V
◉	1	2BL93060	MAIN DRIVE ASSY	1	1	1
◉	2	•2BL27540	MOTOR MAIN	1	1	1
	3	•2BL22140	GUIDE DLP	1	1	1
◉	4	•2BL22240	SPRING JOINT FUSER	1	1	1
◉	5	•2BL22220	GEAR Z36S-Z31H	1	1	1
◉	6	•2BL22190	GEAR Z50H	1	1	1
◉	7	•2BL22180	GEAR Z37H-Z28H	1	1	1
◉	8	•2BL22230	GEAR Z34H	1	1	1
◉	9	•2BL22200	GEAR Z63H-Z45S	1	1	1
◉	10	•2BL22710	GEAR Z76H-Z35H	1	1	1
◉	11	•5MVG148DN027	GEAR Z37S	1	1	1
◉	12	•2BL22780	GEAR Z24S	1	1	1
◉	13	•2BL22160	GEAR DRUM Z76H-Z30H	1	1	1
◉	14	•2BL22210	GEAR JOINT Z32S	1	1	1
	15	•2BL22010	PLATE DRIVE F	1	1	1
◉	16	•2BL22170	PLATE GUIDE DRUM	1	1	1
	17	•2BL22840	SHAFT DRIVE DRUM FW	1	1	1
◉	18	•2BL22050	GEAR DRUM Z70H	1	1	1
	19	•G3169000	BEARING 6900ZZNR	1	1	1
	20	•2BL22030	PLATE DRIVE R	1	1	1
◉	21	2BL27560	MOTOR EJECT	1	1	1
	22	2BL22640	PLATE DRIVE EXIT	1	1	1
◉	23	2BL22800	GEAR Z47S-Z28S	1	1	1
◉	24	2BL22630	GEAR EXIT Z30S	1	1	1
◉	25	2BL27500	CLUTCH FEED	1	1	1
	26	34806150	STOPPER 5	1	1	1
	27	2BL23020	DUCT DRUM	1	1	1
	28	2BL23080	FILM DUCT DRUM	1	1	1
	29	2BL23030	DUCT DLP	1	1	1
◉	30	2BL27520	FAN COOLING(M)	1	1	1
	31	2BL23040	LID DLP DUCT	1	1	1
	32	2BL22850	RETAINER FLYWHEEL	1	1	1
	33	2BL22860	FLYWHEEL 190	1	1	1
	34	2BL22870	WEIGHT 190	1	1	1
	35	2BL26150	MOUNT BASE TERMINAL	1	1	1
	36	2BL26160	PLATE TRANSFER A	1	1	1
	37	2BL26170	PLATE SEPARATION A	1	1	1
◉	38	2BL01170	EMPTY SW ASS'Y	1	1	1
	39	2BL23050	DUCT MAIN A	1	1	1
	40	2BL23060	DUCT MAIN B	1	1	1
◉	41	2BL27530	FAN COOLING(C)	2	2	2
	42	M2109010	WIRE SADDLE,WS-2NS	2	2	2
	43	2BL27120	WIRE CONTAINER	1	1	1
	44	2BL02220	RAIL DRUM R	1	1	1
	45	M2109330	WIRE SADDLE,YMC-10-0(KITAGAWA)	3	3	3
	46	2BL27340	WIRE REAR FAN	1	1	1
	47	2BL23070	MOUNT REAR FAN	1	1	1
	48	2BL23100	FILM COOLING	1	1	1
	49	2BL22880	FILM BKT CLUTCH	1	1	1
	50	2BL22150	BRACKET CLUTCH	1	1	1

• Parts with "•" are component parts or sub-assemblies of the assembly appearing immediately above them.
• Parts with "◉" indicates the Service parts.

• Parts with "• •" are component parts or sub-assembly with "•" appearing immediately above them.

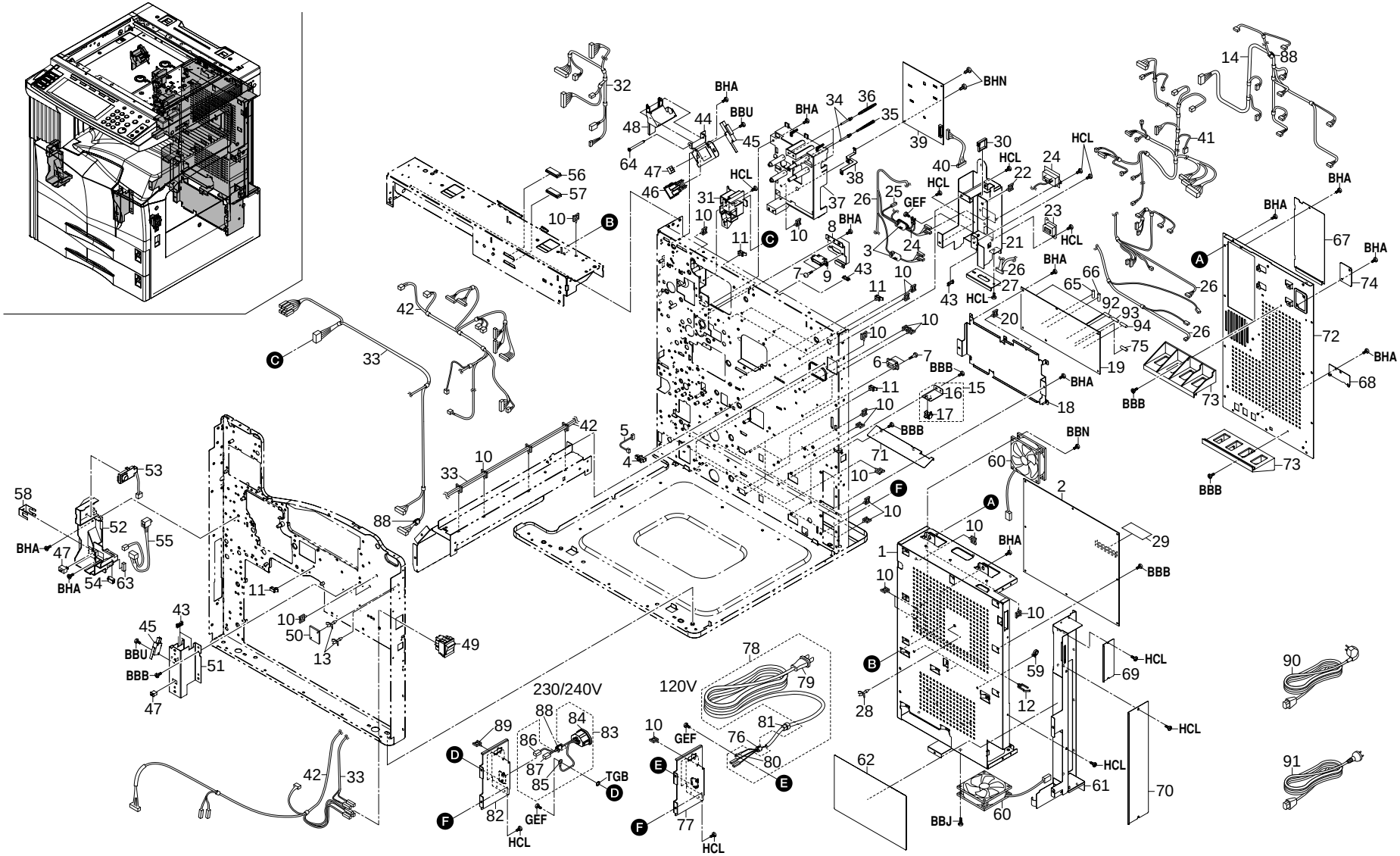
230/240V
120V
BHA
BBU
BHN
HCL
GEF
BBB
BBN
BBJ
TGB

FIG. 18 ELECTRICAL COMPONENTS

SP	Ref. No.	Part. No.	Description	Quantity		
				120V	230V	240V
	1	2BJ26010	MOUNT PCB	1	1	1
◉	2	2BJ01010	PCB ENGINE ASS'Y	1	1	1
	3	2A027740	CORE 11-23X14(K)	2	2	2
◉	4	2BL27450	SWITCH PI	1	1	1
	5	2BL27290	WIRE BYPASS FEED PI	1	1	1
◉	6	J0464080	RECEPTACLE,QR/P15-8S-C(02)(HIROSE)	2	2	2
	7	33927450	RETAINING PIN,DRAWER	6	6	6
	8	2BL26200	MOUNT DRUM DRAWER	1	1	1
	9	J7340100	RECEPTACLE,9715S-10A(IRS)	1	1	1
	10	M2109010	WIRE SADDLE,WS-2NS	33	32	32
	11	M2109330	WIRE SADDLE,YMC-10-0(KITAGAWA)	4	4	4
	12	M2109400	WIRE SADDLE,RLWS-2020T V0(KITAGAWA)	2	2	2
	13	M2108120	SPACER,KGLS-4S	2	2	2
	14	2BJ27100	WIRE PAPER FEED(C)	1	1	1
	15	2AR00150	CASSETTE SWITCH ASS'Y	2	2	2
	16	•2AR07170	MOUNT,CASSETTE SWITCH	2	2	2
◉	17	•66127010	SWITCH,COVER OPEN	2	2	2
	18	2BL26040	MOUNT POWER PCB	1	1	1
◉	19	2BL28030	POWER SOURCE PCB 100	1		
◉	19	2BL28040	POWER SOURCE PCB 200		1	1
	20	M2109350	WIRE SADDLE,YMC-15-0(KITAGAWA)	1	1	1
	21	2BJ26100	MOUNT OPTION I/F (E)	1	1	1
	22	M2109020	WIRE SADDLE,WS-2WS	1	1	1
	23	J0326120	CASE,54082-1215(MOLEX)	1	1	1
	24	2BL27280	WIRE FINISHER GND	1	1	1
	25	2AC27880	WIRE FG,FINISHER	1	1	1
	26	2BJ27070	WIRE OPTION(C)	1	1	1
	27	2AR26340	MOUNT,DECK CONNECTOR	1	1	1
	28	M2108670	SPACER,KGPS-6RF(KITAGAWA)	1	1	1
	29	3B228050	PCB DIMM5	1	1	1
	30	M2104280	EDGING,EDS-25L(KITAGAWA)	1	1	1
	31	2BL26290	MOUNT FIXING DRAWER	1	1	1
	32	2BL27030	WIRE DRAWER	1	1	1
	33	2BL27050	WIRE PRIMARY	1	1	1
	34	2BL26060	PIN TERMINAL	4	4	4
	35	2BL26070	SPRING TERMINAL	1	1	1
	36	2BL26270	SPRING TERMINAL T	3	3	3
	37	2BL26050	CASE HIGH VOLTAGE	1	1	1
	38	2BL26080	GROUND PLATE HV	1	1	1
◉	39	2BL28050	HIGH VOLTAGE PCB	1	1	1

SP	Ref. No.	Part. No.	Description	Quantity		
				120V	230V	240V
	40	2BJ27130	WIRE HIGH VOLTAGE(C)	1	1	1
	41	2BJ27110	WIRE MOTOR(C)	1	1	1
	42	2BJ27090	WIRE FRONT(C)	1	1	1
	43	M2104210	EDGING,EDS-2	4	4	4
	44	2BL26110	LEFT MOUNT I/L	1	1	1
◉	45	2BL27480	SWITCH INTERLOCK	2	2	2
◉	46	2AR27040	SWITCH,INTERLOCK	1	1	1
◉	47	35927420	SWITCH,SIZE	3	3	3
	48	2BL26120	LEFT WORK PLATE I/L	1	1	1
◉	49	2AV27290	SWITCH,MAIN	1	1	1
◉	50	2BM27890	HUMIDITY SENSOR	1	1	1
	51	2BL04060	FRONT MOUNT COVER	1	1	1
	52	2BL04080	INNER LEFT COVER	1	1	1
◉	53	2BL01160	TONER SW ASS'Y	1	1	1
	54	J5016050	CASE,BU05P-TR-PC-H(JST)	1	1	1
	55	2BL27250	WIRE TONER DISPOSAL	1	1	1
	56	J5016120	CASE,BU12P-TR-PC-H(JST)	1	1	1
	57	J5016130	CASE,BU13P-TR-PC-H(JST)	1	1	1
	58	2BL04450	GROUND PLATE INNER L	2	2	2
	59	M2107120	BINDING BAND SG-130	3	3	3
◉	60	2BL27610	FAN COOLING(80-15)	2	2	2
	61	2BJ26020	SHIELD PCB	1	1	1
	62	2BJ26200	FILM SHIELD	1	1	1
	63	2BL04460	SPACER WIRE	1	1	1
	64	2BL26280	SHAFT I/L	1	1	1
◉	65	M1660010	FUSE,237010(LITTEL)	1	1	1
◉	66	M8955000	FUSE,MRT5(BEL FUSE)	1	1	1
	67	2BJ26050	LID MEMORY	1	1	1
	68	2BJ26120	LID MODULAR	1	1	1
	69	2BJ26130	LID NETWORKSCANNER	1	1	1
	70	2BJ26140	LID PRINTER BOARD	1	1	1
	71	2BJ26210	SHIELD SUBWIRE	1	1	1
	72	2BJ26030	UPPER SHIELD PCB	1	1	1
	73	2BJ26060	RAIL PRINTER PCB	2	2	2
	74	2BJ26150	LID MMD	1	1	1
◉	75	M1652030	FUSE,23702.5(LITTEL-FUSE)	1		
	76	63827080	FERRITE CORE	1		
	77	2BL26240	MOUNT POWER CORD 120	1		
	78	2AR01230	POWER CORD ASS'Y(120)	1		
	79	•2AR27780	POWER CORD(120)	1		

• Parts with "•" are component parts or sub-assemblies of the assembly appearing immediately above them.
• Parts with "◉" indicates the Service parts.

• Parts with "• •" are component parts or sub-assembly with "•" appearing immediately above them.

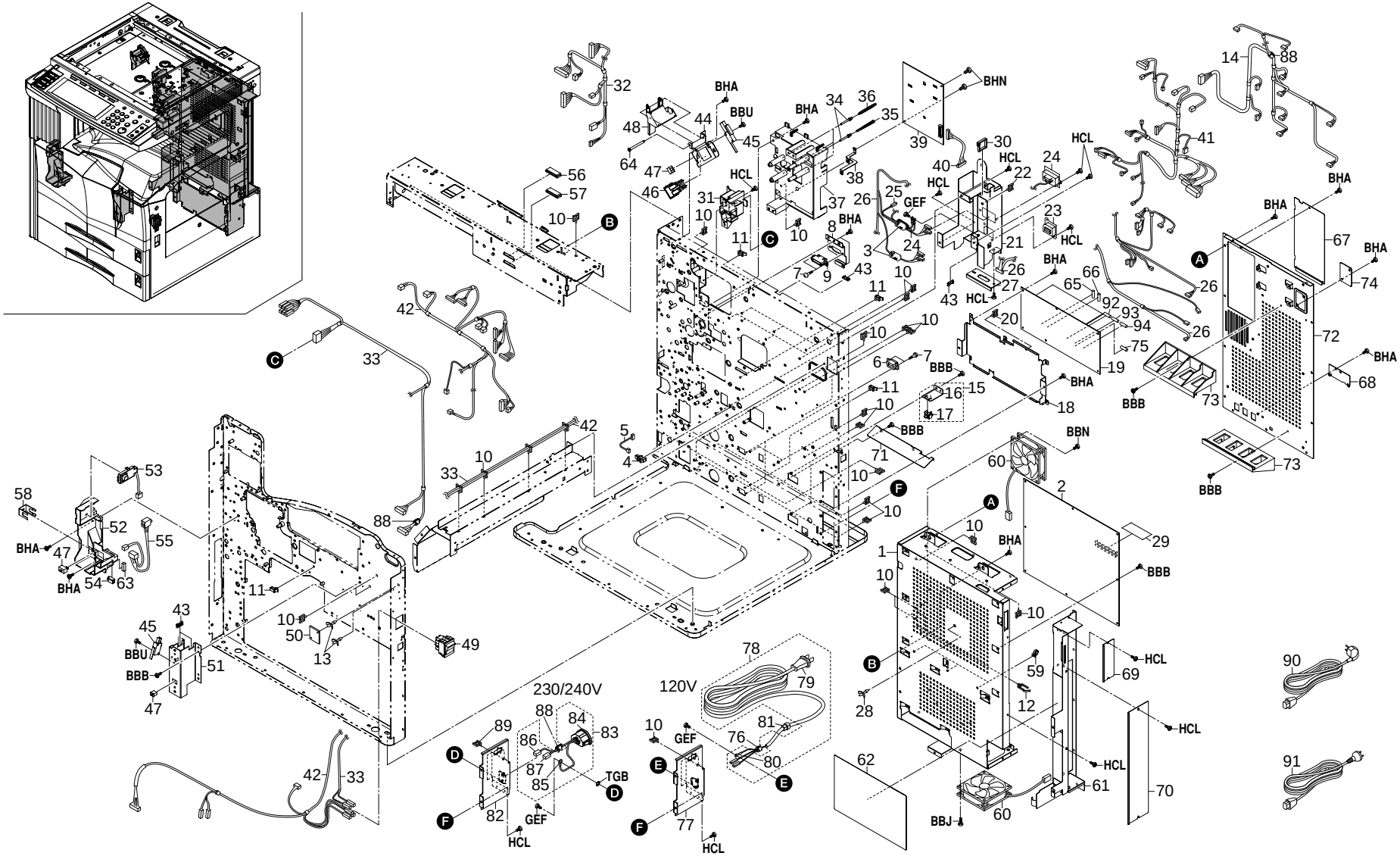
230/240V
120V
BHA
BBU
BHN
HCL
GEF
BBB
BBN
BBJ
TGB

FIG. 18 ELECTRICAL COMPONENTS

SP	Ref. No.	Part. No.	Description	Quantity		
				120V	230V	240V
	80	•L0023080	ROUND TYPE TERMINAL,173638-1	1		
	81	M1203490	STRAIN RELEAF BUSHING,SR-7K-2	1		
	82	2BL26250	MOUNT INLET CORD 230		1	1
	83	2BL01150	INLET ASS'Y		1	1
	84	•2AV27350	INLET,POWER SOURCE		1	1
	85	•L0023070	ROUND TYPE TERMINAL,173636-1		1	1
	86	•J0074010	POSITIVE CONNECTOR,#250,172076-1		2	2
	87	•J0074910	POSITIVE CONTACTOR,#250,170334-1		2	2
	88	63827080	FERRITE CORE		3	3
	89	M2109010	WIRE SADDLE,WS-2NS		1	1
	90	2AR27800	POWER CORD(230)		1	
	91	29927231	POWER CODE AS(240)			1
◉	92	M1652040	FUSE,21502.5(LITTEL-FUSE)		1	1
◉	93	M1656050	FUSE,21506.3(LITTEL-FUSE)		1	1
◉	94	M1658030	FUSE,215008(LITTEL-FUSE)		1	1

• Parts with "•" are component parts or sub-assemblies of the assembly appearing immediately above them.
• Parts with "◉" indicates the Service parts.

• Parts with "• •" are component parts or sub-assembly with "•" appearing immediately above them.

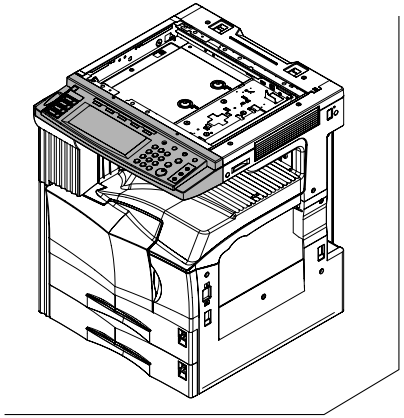

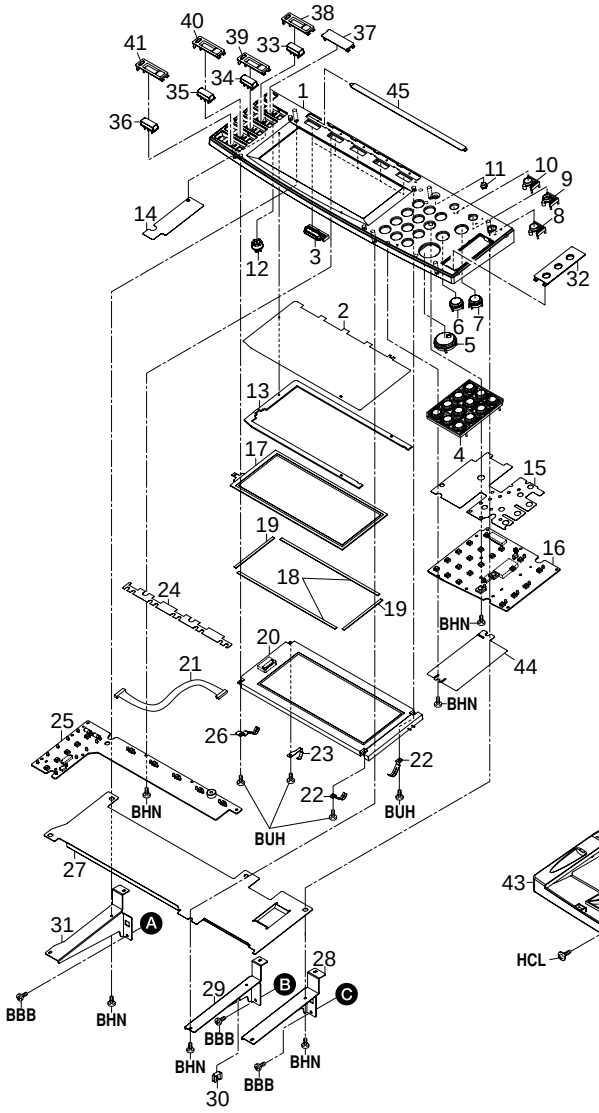
40
38
41
39
33
37
35
34
1
45
36
11
10
9
14
8
12
3
32
2
6
7
5
13
17
4
15
19
16
18
24
19
BHN
20
44
21
BHN
25
26
23
22
22
BHN
BUH
BUH
27
31
A
28
29
B
C
BBB
BHN
BBB
BHN
BHN
BBB
30

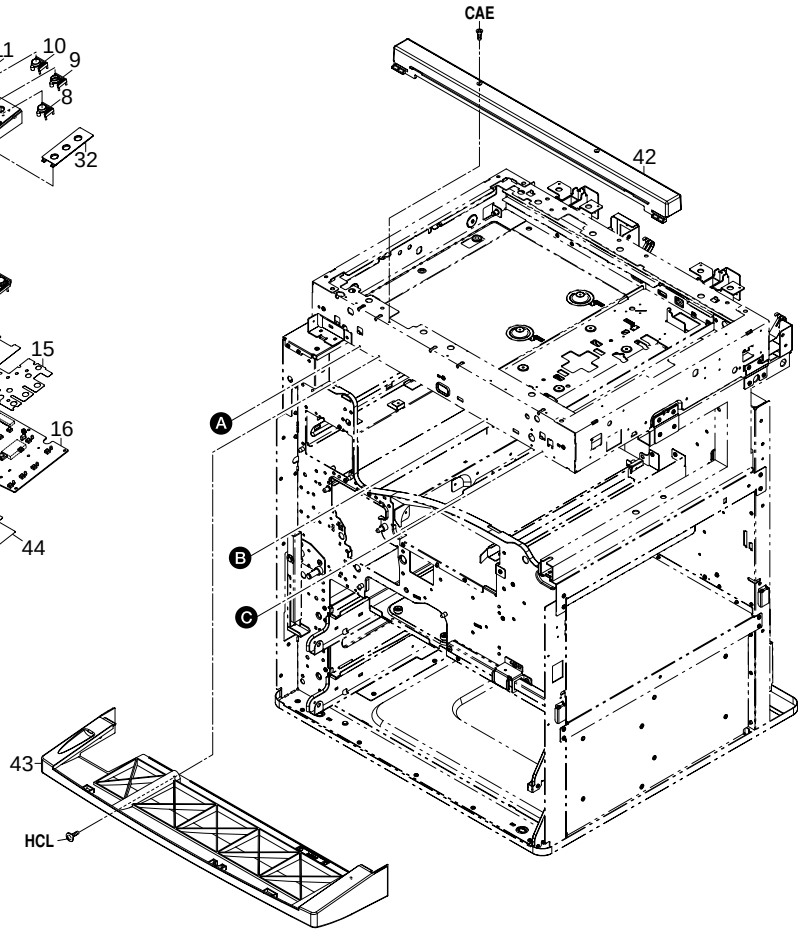
CAE
42
A
B
C
43
HCL

FIG. 19 OPERATION UNIT

SP	Ref. No.	Part. No.	Description	Quantity		
				120V	230V	240V
◉	1	2BJ25290	COVER OPE UNIT E	1	1	1
	2	2BJ25370	SHEET TABLET	1	1	1
◉	3	2BJ25100	UPPER KEY FUNCTION	5	5	5
◉	4	2BJ25020	KEY OPERATION 10	1	1	1
◉	5	2BJ25300	KEY PRINT E	1	1	1
◉	6	2BJ25040	KEY STOP	1	1	1
◉	7	2BJ25050	KEY RESET	1	1	1
◉	8	2BJ25060	KEY SAVER	1	1	1
◉	9	2BJ25070	KEY INTERRUPT	1	1	1
◉	10	2BJ25080	KEY CONTROL	1	1	1
◉	11	2BJ25090	KEY INIT	1	1	1
◉	12	2BJ25250	VOLUME OPE UNIT	1	1	1
◉	13	2BJ25240	BARRIER TABLET	1	1	1
◉	14	2BJ25210	LEFT DUST SHIELD	1	1	1
◉	15	2BJ25230	RIGHT DUST SHIELD	1	1	1
◉	16	2BJ01071	OPERATION ASS'Y B	1	1	1
◉	17	2BJ27060	TABLET OPERATION	1	1	1
◉	18	2BJ25270	SPONGE LCD A	2	2	2
◉	19	2BJ25280	SPONGE LCD B	2	2	2
◉	20	2BJ28030	LCD PCB	1	1	1
	21	2BJ27140	WIRE LCD	1	1	1
	22	2BJ04220	GROUND PLATE LCD A	2	2	2
	23	2BJ04240	GROUND PLATE LCD C	1	1	1
◉	24	2BJ25220	CENTER DUST SHIELD	1	1	1
◉	25	2BJ01031	OPERATION ASS'Y A	1	1	1
	26	2BJ04230	GROUND PLATE LCD B	1	1	1
	27	2BJ04210	SHIELD LCD	1	1	1
	28	2BJ04130	RIGHT MOUNT COVER	1	1	1
	29	2BJ04120	MIDDLE MOUNT COVER	1	1	1
	30	M2104350	EDGING,EDS-0607M(KITAGAWA)	1	1	1
	31	2BJ04110	LEFT MOUNT COVER	1	1	1
◉	32	2BJ25200	RIGHT LID OPE UNIT	1	1	1
◉	33	2BJ25310	LEFT KEY COPIER E	1	1	1
◉	34	2BJ25320	LEFT KEY PRINTER E	1	1	1
◉	35	2BJ25330	LEFT KEY SCANNER E	1	1	1
◉	36	2BJ25340	LEFT KEY FAX E	1	1	1
◉	37	2BJ25150	LEFT LID OPE UNIT	1	1	1
◉	38	2BJ25160	LEFT LID COPIER	1	1	1
◉	39	2BJ25170	LEFT LID PRINTER	1	1	1
◉	40	2BJ25180	LEFT LID SCANNER	1	1	1
◉	41	2BJ25190	LEFT LID FAX	1	1	1
◉	42	2BJ04160	UPPER COVER OP	1	1	1
◉	43	2BJ04170	LOWER COVER OP (1/2)	1	1	1
	44	2BJ25380	SHEET OPERATION PCB	1	1	1
◉	45	2BJ25260	SHEET FUNCTION	1	1	1

• Parts with "•" are component parts or sub-assemblies of the assembly appearing immediately above them.
• Parts with "◉" indicates the Service parts.

• Parts with "• •" are component parts or sub-assembly with "•" appearing immediately above them.

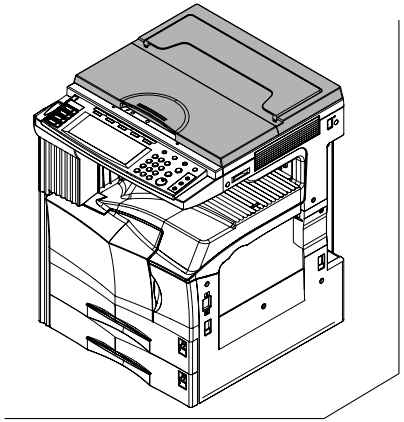

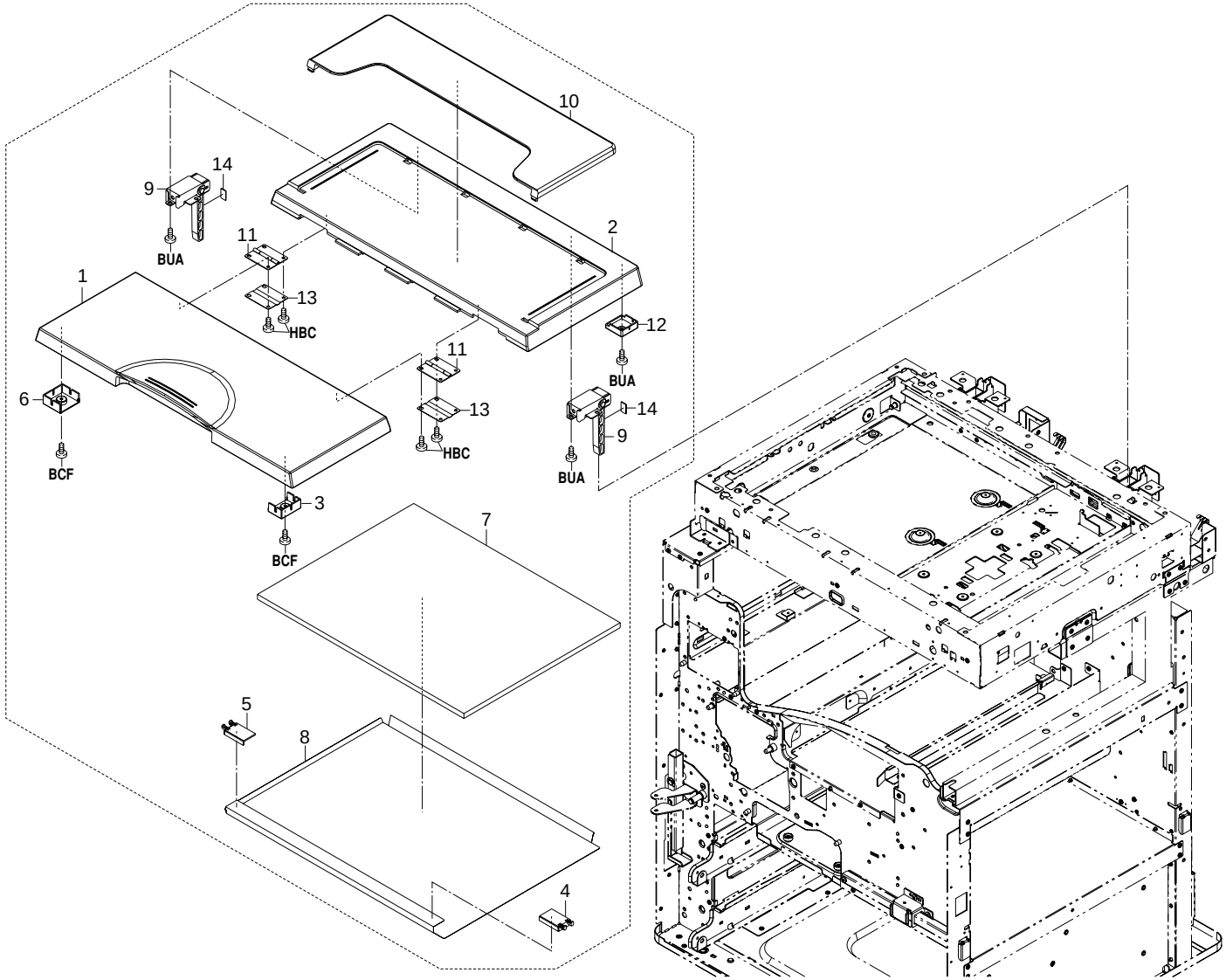
10
14
9
BUA
11
2
1
13
HBC
12
BUA
11
6
13
14
9
HBC
BUA
BCF
3
BCF
7
5
8
4

FIG. 20 OPTION (ORIGINAL HOLDER)

SP	Ref. No.	Part. No.	Description	Quantity		
				120V	230V	240V
◉		2AV60010	ORIGINAL HOLDER ASS'Y	1	1	1
	1	•2AV12370	COVER A,PLATEN	1	1	1
	2	•2AV12380	COVER B,PLATEN	1	1	1
	3	•2AV12390	RIGHT BASE,MAT	1	1	1
	4	•2AV12400	RIGHT MOVING PLATE,MAT	1	1	1
	5	•2AV12410	LEFT MOVING PLATE,MAT	1	1	1
	6	•2AV12420	BASE,MAT	1	1	1
	7	•19012041	MAT,ORIGINAL HOLDER	1	1	1
	8	•19012050	SHEET,ORIGINAL HOLDER	1	1	1
	9	•19012060	HINGE,ORIGINAL HOLDER	2	2	2
	10	•60904280	ORIGINAL POCKET	1	1	1
	11	•60904310	HINGE,ORIGINAL HOLDER	2	2	2
	12	•66012180	ACTUTATION PLATE,ORIGINAL DETECTION SWIT	1	1	1
	13	•69312110	PLATE SPRING,ORIGINAL HOLDER	2	2	2
	14	•79904140	ORIGINAL HOLDER SPACER	2	2	2

• Parts with "•" are component parts or sub-assemblies of the assembly appearing immediately above them.
• Parts with "◉" indicates the Service parts.

• Parts with "• •" are component parts or sub-assembly with "•" appearing immediately above them.

KEY COUNTER

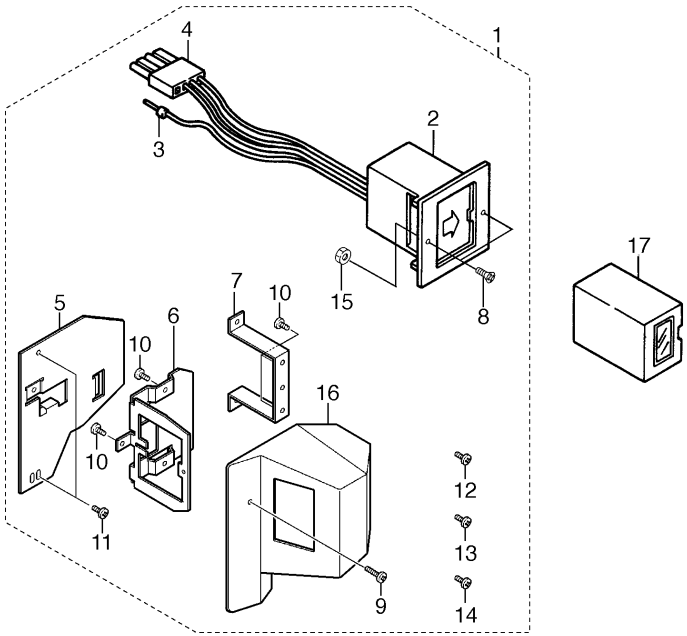

TOOL

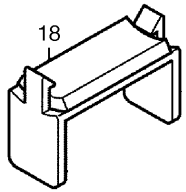

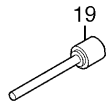

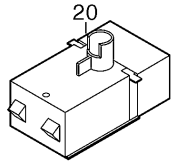

DISPOSAL TANK

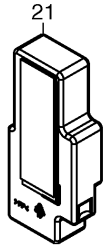

CASSETTE HEATER

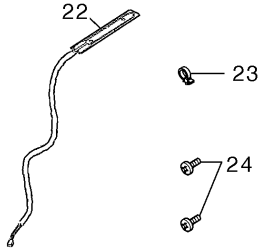

FIG. 21 OPTION & TOOL

SP	Ref. No.	Part. No.	Description	Quantity		
				120V	230V	240V
◉	1	2A369703	SET PARTS KEYCOUNTER NEW COLOR	1	1	1
	2	•41529210	SOCKET ASS'Y,KEY COUNTER	1	1	1
	3	••J0220040	PLUG EL 4P,ELP-04V	1	1	1
	4	••41525016	SOCKET,KEY COUNTER	2	2	2
	5	•66060022	RETAINER,KEY COUNTER COVER	1	1	1
	6	•66060030	RETAINER,KEY COUNTER	1	1	1
	7	•66060040	MOUNT,KEY COUNTER	1	1	1
	8	•B2303060	COUNTER-SUNK HEAD SCREW BFHM3X6 (BLACK)	2	2	2
	9	•B1304300	BINDING SCREW BVM4X30 (BLACK)	1	1	1
	10	•B4304060	TRIPLE SCREW M4X6 (BLACK)	4	4	4
	11	•B4304100	TRIPLE SCREW M4X10 (BLACK)	2	2	2
	12	•B1303080	BINDING SCREW BVM3X8 (BLACK)	1	1	1
	13	•B4104060	TRIPLE SCREW M4X6(CHROMIUM)	1	1	1
	14	•B4304200	TRIPLE SCREW M4X20(BLACK)	1	1	1
	15	•C2303000	NUT BNM3 (BLACK)	1	1	1
	16	•2A360010	COVER,KEY COUNTER	1	1	1
◉	17	82142540	KEY COUNTER	1	1	1
◉	18	35968110	STOPPER WIRE ASS'Y SP	2	2	2
◉	19	2AV68080	SPECIAL TOOL,MIRROR FRAME RETAINING	2	2	2
◉	20	5AAYTK20**03	GRID CLEANER 3 ASSY	1	1	1
	21	2BL93130	TB-700 TONER DISPOSAL TANK ASSY	1	1	1
◉	22	34860030	HEATER,CASSETTE(120)	1		
◉	22	33960020	HEATER,CASSETTE (240)		1	1
	23	M2107120	BINDING BAND SG-130	1	1	1
	24	B1304060	BINDING SCREW BVM4X6 (BLACK)	2	2	2

• Parts with "•" are component parts or sub-assemblies of the assembly appearing immediately above them.
• Parts with "◉" indicates the Service parts.

• Parts with "• •" are component parts or sub-assembly with "•" appearing immediately above them.

SP	Part. No.	Description	Quantity			Fig. No.
			120V	230V	240V	
	18512340	GUIDE,SCANNER WIRE	2	2	2	9
	19012041	MAT,ORIGINAL HOLDER	1	1	1	20
	19012050	SHEET,ORIGINAL HOLDER	1	1	1	20
	19012060	HINGE,ORIGINAL HOLDER	2	2	2	20
	2AC12300	HOLDER FFC	1	1	1	9
	2AC12360	GUIDE,RELEASE SWITCH	1	1	1	9
◉	2AC12370	SWITCH,RELEASE DETECTION	1	1	1	9
	2AC12380	SPRING,RELEASE SWITCH	1	1	1	9
	2AC27880	WIRE FG,FINISHER	1	1	1	18
◉	2AL06110	GEAR 25	1	1	1	5
	2AR00020	LOWER RIGHT REINFORCEMENT ASS'Y	1	1	1	2
	2AR00030	LOWER LEFT REINFORCEMENT ASS'Y	1	1	1	2
	2AR00150	CASSETTE SWITCH ASS'Y	2	2	2	18
◉	2AR00160	PRIMARY PAPER FEED ASS'Y	2	2	2	4
◉	2AR00170	PRIMARY PAPER FEED BUSHING ASS'Y	2	2	2	16
	2AR00610	PAPER FEED DRAWER ASS'Y	2	2	2	2
	2AR01230	POWER CORD ASS'Y(120)	1			18
	2AR02050	LOWER RIGHT REINFORCEMENT	1	1	1	2
	2AR02060	LOWER LEFT REINFORCEMENT	1	1	1	2
	2AR02180	BASE RUBBER	4	4	4	2
	2AR02250	POSITIONING PLATE,LSU	4	4	4	5
	2AR05150	LABEL,CASSETTE OPERATION	2	2	2	3
	2AR05200	LABEL,PAPER UPPER LIMIT	2	2	2	3
	2AR06890	MOUNT CUSHION	4	4	4	3
	2AR07010	CASSETTE	2	2	2	3
	2AR07020	BASE,CASSETTE	2	2	2	3
	2AR07030	WORK PLATE,CASSETTE BASE	2	2	2	3
	2AR07040	SHAFT,WORK PLATE	2	2	2	3
	2AR07050	RAIL A,CURSOR	2	2	2	3
	2AR07060	CURSOR A,CASSETTE	2	2	2	3
	2AR07070	CURSOR B,CASSETTE	2	2	2	3
	2AR07080	CURSOR C,CASSETTE	2	2	2	3
	2AR07090	RAIL C,CURSOR	2	2	2	3
	2AR07100	FRONT GUIDE C,CURSOR	2	2	2	3
	2AR07110	REAR GUIDE C,CURSOR	2	2	2	3
	2AR07120	LID A,CURSOR	2	2	2	3
	2AR07140	LEFT RAIL,CASSETTE	2	2	2	2
◉	2AR07150	GROUND PLATE,CASSETTE	2	2	2	3
	2AR07160	MOUNT,CASSETTE STOPPER	2	2	2	3
	2AR07170	MOUNT,CASSETTE SWITCH	2	2	2	18

SP	Part. No.	Description	Quantity			Fig. No.
			120V	230V	240V	
	2AR07180	RETAINER M4	6	6	6	3
	2AR07190	SHAFT,CASSETTE PULLEY	4	4	4	3
	2AR07200	UPPER HOUSING,PAPER FEED	2	2	2	4
	2AR07210	LOWER HOUSING,PAPER FEED	2	2	2	4
◉	2AR07220	PULLEY,PAPER FEED	2	2	2	4
◉	2AR07230	PULLEY,SEPARATION	3	3	3	4,10
◉	2AR07240	PULLEY,LEADING FEED	3	3	3	4,10
	2AR07250	SHAFT,PAPER FEED	2	2	2	4
	2AR07260	SHAFT,SEPARATION	2	2	2	4
	2AR07270	SHAFT,LEADING FEED	2	2	2	4
	2AR07280	SUPPORT PLATE,LEADING FEED PULLEY	2	2	2	4
	2AR07290	REINFORCEMENT,LEADING FEED SUPPORT	2	2	2	4
	2AR07300	WEIGHT,LEADING FEED PULLEY	2	2	2	4
	2AR07310	LEVER,SEPARATION PULLEY RELEASE	2	2	2	4
	2AR07340	LEVER A,CURSOR	2	2	2	3
◉	2AR07350	SPRING,SEPARATION PULLEY	2	2	2	4
	2AR07540	RETAINING PIN,VERTICAL CONVEYING	1	1	1	6
	2AR07610	STOPPER,TRAILING EDGE DETECTION	2	2	2	3
	2AR07620	PROTECTING PLATE,CASSETTE WIRE	2	2	2	3
	2AR07630	LID,TRAILING EDGE DETECTION PLATE	2	2	2	3
	2AR07640	ACTUATOR,PAPER EMPTY	2	2	2	4
	2AR07650	HOLDER,ACTUATOR	2	2	2	4
	2AR07660	GUIDE FILM,SEPARATION PULLEY	2	2	2	4
	2AR07670	REINFORCEMENT,PRIMARY PAPER FEED	2	2	2	4
	2AR07690	STOPPER,SUPPORT PLATE	2	2	2	4
	2AR07710	MOUNT,PAPER FEED DRAWER	2	2	2	2
	2AR07720	COVER,CASSETTE RAIL	1	1	1	2
	2AR07790	GROUND PLATE,PRIMARY PAPER FEED	2	2	2	4
	2AR07800	PULLEY,CASSETTE RAIL	8	8	8	2
	2AR07810	FRONT PIN,CASSETTE RAIL	4	4	4	2
	2AR07820	REAR PIN,CASSETTE RAIL	4	4	4	2
	2AR12200	FILM,FFC	1	1	1	9
	2AR18240	CLAW,SEPARATION	5	5	5	15
	2AR18260	PULLEY,CLAW SEPARATION	5	5	5	15
	2AR18280	SPRING,CLAW SEPARATION	5	5	5	15
	2AR20510	SHAFT,PRESSURE ROLLER SEPARATION C	4	4	4	6
	2AR26340	MOUNT,DECK CONNECTOR	1	1	1	18
◉	2AR27040	SWITCH,INTERLOCK	1	1	1	18
	2AR27220	WIRE,CASSETTE UNIT	2	2	2	3
	2AR27430	WIRE,PRIMARY PAPER FEED UNIT	2	2	2	4

• Parts with "◉" indicates the Service parts.

SP	Part. No.	Description	Quantity			Fig. No.
			120V	230V	240V	
	2AR27520	WIRE,SCANNER SWITCH	1	1	1	9
	2AR27600	JUNCTION WIRING,PRIMARY PAPER FEED	2	2	2	2
	2AR27650	WIRE,INVERTER	1	1	1	9
	2AR27780	POWER CORD(120)	1			18
	2AR27800	POWER CORD(230)		1		18
◉	2AR93360	PARTS,SCANNER DRIVE PCB(SP)	1	1	1	9
	2AV00010	SCANNER FRAME ASS'Y	1	1	1	9
◉	2AV04100	REAR COVER SCANNER	1	1	1	1
	2AV12080	GUIDE FFC1	1	1	1	9
	2AV12091	MIRROR FRAME A	1	1	1	9
◉	2AV12100	LAMP,SCANNER	1	1	1	9
	2AV12110	REFLECTOR,SCANNER	1	1	1	9
	2AV12120	LIGHT SHIELD,PI	1	1	1	9
	2AV12130	MIRROR FRAME B	1	1	1	9
	2AV12140	ADJUSTING PLATE B,MIRROR FRAME	1	1	1	9
◉	2AV12150	MIRROR A	1	1	1	9
◉	2AV12160	MIRROR B	2	2	2	9
	2AV12170	MOUNT,SCANNER PI	1	1	1	9
	2AV12180	PULLY,SCANNER	8	8	8	9
◉	2AV12190	FRONT WIRE,SCANNER	1	1	1	9
◉	2AV12200	REAR WIRE,SCANNER	1	1	1	9
	2AV12210	SHAFT,SCANNER DRIVE	1	1	1	9
◉	2AV12221	MOTOR,SCANNER	1	1	1	9
◉	2AV12230	GEAR 44/16	1	1	1	9
◉	2AV12240	GEAR 26	1	1	1	9
◉	2AV12250	CONTACT GLASS,ADF	1	1	1	9
	2AV12260	MOUNT BASE,DF HINGE	2	2	2	9
	2AV12270	MOUNT,SCANNER MOTOR	1	1	1	9
	2AV12290	MOUNT,RELEASE SWITCH	1	1	1	9
	2AV12300	HOLDER,ADF CONTACT GLASS	2	2	2	9
	2AV12310	COVER,OPERATION UNIT WIRE	1	1	1	9
	2AV12320	FILM A,MIRROR FRAME	1	1	1	9
	2AV12340	MOUNT,ORIGINAL DETECTION SENSOR	1	1	1	9
	2AV12350	STOPPER,WIRE	2	2	2	9
	2AV12370	COVER A,PLATEN	1	1	1	20
	2AV12380	COVER B,PLATEN	1	1	1	20
	2AV12390	RIGHT BASE,MAT	1	1	1	20
	2AV12400	RIGHT MOVING PLATE,MAT	1	1	1	20
	2AV12410	LEFT MOVING PLATE,MAT	1	1	1	20
	2AV12420	BASE,MAT	1	1	1	20

SP	Part. No.	Description	Quantity			Fig. No.
			120V	230V	240V	
	2AV12430	LOWER SEAL,SCANNER	2	2	2	9
◉	2AV12450	SLIDER,SCANNER	8	8	8	9
◉	2AV12460	REAR ORIGINAL SIZE INDICATOR(METRI		1	1	9
◉	2AV12470	REAR ORIGINAL SIZE INDICATOR(INCH)	1			9
◉	2AV12480	LABEL,ORIGINAL SIZE INDICATOR(METR		1	1	9
◉	2AV12490	LABEL,ORIGINAL SIZE INDICATOR(INCH	1			9
	2AV12500	SPRING,SCANNER TENSION	2	2	2	9
	2AV12520	COVER,ISU	1	1	1	9
	2AV12600	FILM B,MIRROR FRAME	1	1	1	9
	2AV12610	FILM C,MIRROR FRAME	1	1	1	9
◉	2AV27290	SWITCH,MAIN	1	1	1	18
◉	2AV27330	CLUTCH,PAPER FEED	1	1	1	10
	2AV27350	INLET,POWER SOURCE		1	1	18
◉	2AV28080	INVERTER PCB	1	1	1	9
◉	2AV60010	ORIGINAL HOLDER ASS'Y	1	1	1	20
◉	2AV68080	SPECIAL TOOL,MIRROR FRAME RETAININ	2	2	2	21
	2A027740	CORE 11-23X14(K)	2	2	2	18
◉	2A105180	LABEL,CAUTION CONTACT GLASS	1	1	1	9
	2A126130	PIN,OPTION	1	1	1	1
◉	2A305070	LEFT ORIGINAL SIZE INDICATOR	1	1	1	9
	2A360010	COVER,KEY COUNTER	1	1	1	21
◉	2A369703	SET PARTS KEYCOUNTER NEW COLOR	1	1	1	21
◉	2A627490	COUNTER,TOTAL	1	1	1	9
	2A873520	SEAL SCRAPER	3	3	3	13
◉	2BH04010	RIGHT FRONT COVER	1	1	1	1
	2BH27020	WIRE SCANNER	1	1	1	9
◉	2BJ01010	PCB ENGINE ASS'Y	1	1	1	18
◉	2BJ01031	OPERATION ASS'Y A	1	1	1	19
	2BJ01040	PCB DRUM ASS'Y(C)	1	1	1	15
	2BJ01050	PCB DEVE ASS'Y(C)	1	1	1	13
	2BJ01060	PCB FIXING ASS'Y(C)	1	1	1	14
◉	2BJ01071	OPERATION ASS'Y B	1	1	1	19
	2BJ02010	UPPER FRONT FRAME	1	1	1	2
	2BJ02020	UPPER REAR FRAME	1	1	1	2
	2BJ02030	UPPER RIGHT PIPE	1	1	1	2
	2BJ02040	UPPER LEFT PLATE	1	1	1	2
	2BJ02050	RIGHT MOUNT ISU	1	1	1	2
	2BJ02060	FRONT MOUNT ISU	1	1	1	2
	2BJ02070	REAR MOUNT ISU	1	1	1	2
	2BJ02080	MOUNT COVER R	1	1	1	2

• Parts with "◉" indicates the Service parts.

SP	Part. No.	Description	Quantity			Fig. No.
			120V	230V	240V	
	2BJ02090	MOUNT COVER L	1	1	1	2
	2BJ02100	RAIL CONT	1	1	1	2
	2BJ02110	FULCRUM PLATE,MIDDLE TRAY	1	1	1	2
	2BJ02120	HOLDER,FULCRUM	1	1	1	2
◉	2BJ04010	LEFT FRONT COVER	1	1	1	1
◉	2BJ04020	REAR COVER 1	1	1	1	1
◉	2BJ04030	REAR COVER TRAY	1	1	1	1
◉	2BJ04040	UPPER EJECT COVER	1	1	1	1
◉	2BJ04050	RIGHT COVER TRAY	1	1	1	1
◉	2BJ04060	UPPER LEFT COVER A	1	1	1	1
◉	2BJ04070	UPPER LEFT COVER B	1	1	1	1
◉	2BJ04080	UPPER RIGHT COVER A	1	1	1	1
◉	2BJ04090	UPPER RIGHT COVER B (1/2)	1	1	1	1
	2BJ04110	LEFT MOUNT COVER	1	1	1	19
	2BJ04120	MIDDLE MOUNT COVER	1	1	1	19
	2BJ04130	RIGHT MOUNT COVER	1	1	1	19
	2BJ04140	INNER RIGHT COVER	1	1	1	1
	2BJ04150	MOUNT LEFT FRONT COVER	1	1	1	1
◉	2BJ04160	UPPER COVER OP	1	1	1	19
◉	2BJ04170	LOWER COVER OP (1/2)	1	1	1	19
	2BJ04180	LEVER CONT RELEASE	1	1	1	1
◉	2BJ04200	RIGHT FRONT COVER	1	1	1	1
	2BJ04210	SHIELD LCD	1	1	1	19
	2BJ04220	GROUND PLATE LCD A	2	2	2	19
	2BJ04230	GROUND PLATE LCD B	1	1	1	19
	2BJ04240	GROUND PLATE LCD C	1	1	1	19
	2BJ04250	COVER FLYWHEEL	1	1	1	1
◉	2BJ04510	COVER EXIT L	1	1	1	6
	2BJ04520	FRONT PLATE EXIT L	1	1	1	6
	2BJ04530	REAR PLATE EXIT L	1	1	1	6
	2BJ12030	HOLDER SCANNER PCB	2	2	2	9
	2BJ12080	FRONT FILM SCANNER	4	4	4	9
	2BJ21010	GUIDE CHANGE UP	1	1	1	6
◉	2BJ21020	LEVER GUIDE CHANGE U	1	1	1	6
	2BJ21030	SPRING CHANGE UP	1	1	1	6
◉	2BJ21040	LEVER CHANGE UP B	1	1	1	6
◉	2BJ22010	COUPLING CONTAINER B	1			16
◉	2BJ25020	KEY OPERATION 10	1	1	1	19
◉	2BJ25040	KEY STOP	1	1	1	19
◉	2BJ25050	KEY RESET	1	1	1	19

SP	Part. No.	Description	Quantity			Fig. No.
			120V	230V	240V	
◉	2BJ25060	KEY SAVER	1	1	1	19
◉	2BJ25070	KEY INTERRUPT	1	1	1	19
◉	2BJ25080	KEY CONTROL	1	1	1	19
◉	2BJ25090	KEY INIT	1	1	1	19
◉	2BJ25100	UPPER KEY FUNCTION	5	5	5	19
◉	2BJ25150	LEFT LID OPE UNIT	1	1	1	19
◉	2BJ25160	LEFT LID COPIER	1	1	1	19
◉	2BJ25170	LEFT LID PRINTER	1	1	1	19
◉	2BJ25180	LEFT LID SCANNER	1	1	1	19
◉	2BJ25190	LEFT LID FAX	1	1	1	19
◉	2BJ25200	RIGHT LID OPE UNIT	1	1	1	19
◉	2BJ25210	LEFT DUST SHIELD	1	1	1	19
◉	2BJ25220	CENTER DUST SHIELD	1	1	1	19
◉	2BJ25230	RIGHT DUST SHIELD	1	1	1	19
◉	2BJ25240	BARRIER TABLET	1	1	1	19
◉	2BJ25250	VOLUME OPE UNIT	1	1	1	19
◉	2BJ25260	SHEET FUNCTION	1	1	1	19
◉	2BJ25270	SPONGE LCD A	2	2	2	19
◉	2BJ25280	SPONGE LCD B	2	2	2	19
◉	2BJ25290	COVER OPE UNIT E	1	1	1	19
◉	2BJ25300	KEY PRINT E	1	1	1	19
◉	2BJ25310	LEFT KEY COPIER E	1	1	1	19
◉	2BJ25320	LEFT KEY PRINTER E	1	1	1	19
◉	2BJ25330	LEFT KEY SCANNER E	1	1	1	19
◉	2BJ25340	LEFT KEY FAX E	1	1	1	19
	2BJ25370	SHEET TABLET	1	1	1	19
	2BJ25380	SHEET OPERATION PCB	1	1	1	19
	2BJ26010	MOUNT PCB	1	1	1	18
	2BJ26020	SHIELD PCB	1	1	1	18
	2BJ26030	UPPER SHIELD PCB	1	1	1	18
	2BJ26050	LID MEMORY	1	1	1	18
	2BJ26060	RAIL PRINTER PCB	2	2	2	18
	2BJ26100	MOUNT OPTION I/F (E)	1	1	1	18
	2BJ26120	LID MODULAR	1	1	1	18
	2BJ26130	LID NETWORKSCANNER	1	1	1	18
	2BJ26140	LID PRINTER BOARD	1	1	1	18
	2BJ26150	LID MMD	1	1	1	18
	2BJ26180	MOUNT DF CONNECTOR	1	1	1	9
	2BJ26200	FILM SHIELD	1	1	1	18
	2BJ26210	SHIELD SUBWIRE	1	1	1	18

• Parts with "◉" indicates the Service parts.

SP	Part. No.	Description	Quantity			Fig. No.
			120V	230V	240V	
	2BJ27020	WIRE DF	1	1	1	9
	2BJ27030	WIRE OPERATION(C)	1	1	1	9
◉	2BJ27060	TABLET OPERATION	1	1	1	19
	2BJ27070	WIRE OPTION(C)	1	1	1	18
	2BJ27080	WIRE ORIGINAL SENSOR	1	1	1	9
	2BJ27090	WIRE FRONT(C)	1	1	1	18
	2BJ27100	WIRE PAPER FEED(C)	1	1	1	18
	2BJ27110	WIRE MOTOR(C)	1	1	1	18
	2BJ27130	WIRE HIGH VOLTAGE(C)	1	1	1	18
	2BJ27140	WIRE LCD	1	1	1	19
	2BJ27160	WIRE EJECT(C)	1	1	1	8
	2BJ27170	WIRE RELEASE SW	1	1	1	9
	2BJ27190	WIRE COUNTER	1	1	1	9
	2BJ27200	WIRE LSU(C)	1	1	1	12
◉	2BJ28030	LCD PCB	1	1	1	19
◉	2BJ93010	DEVELOPER ASSY	1	1	1	13
◉	2BJ93020	DRUM ASSY	1	1	1	15
◉	2BJ93040	FIXING ASSY 120	1			14
◉	2BJ93050	FIXING ASSY 230		1	1	14
◉	2BK04020	TRAY SUB C	1	1	1	1
◉	2BK04030	STOPPER PAPER C	1	1	1	1
◉	2BK20010	ROLLER HEAT	1	1	1	14
	2BK20020	SPRING PRESSURE	2	2	2	14
	2BL01080	PCB ZENER ASS'Y	1	1	1	15
	2BL01150	INLET ASS'Y		1	1	18
◉	2BL01160	TONER SW ASS'Y	1	1	1	18
◉	2BL01170	EMPTY SW ASS'Y	1	1	1	17
	2BL02010	FRONT FRAME	1	1	1	2
	2BL02020	REAR FRAME	1	1	1	2
	2BL02030	BASE	1	1	1	2
	2BL02040	BASE MIDDLE	1	1	1	2
	2BL02050	LOWER BASE LSU	1	1	1	2
	2BL02060	UPPER PLATE DRUM	1	1	1	2
	2BL02100	UPPER PLATE FIXING	1	1	1	2
	2BL02120	UPPER RIGHT PLATE	1	1	1	2
	2BL02130	LOWER PLATE CONT	1	1	1	2
	2BL02140	HANDLE MACHINE	1	1	1	2
	2BL02150	MOUNT RIGHT HANDLE	3	3	3	2
	2BL02170	PIN HANDLE	2	2	2	2
	2BL02180	RIGHT HANDLE MACHINE	3	3	3	2

SP	Part. No.	Description	Quantity			Fig. No.
			120V	230V	240V	
	2BL02200	MOUNT REAR COVER	1	1	1	2
	2BL02220	RAIL DRUM R	1	1	1	17
	2BL02230	MOUNT FAN	1	1	1	12
◉	2BL04030	FRONT COVER MIDDLE	1	1	1	1
◉	2BL04040	TRAY EJECT	1	1	1	1
	2BL04060	FRONT MOUNT COVER	1	1	1	18
	2BL04080	INNER LEFT COVER	1	1	1	18
◉	2BL04100	COVER EXIT LOW	1	1	1	1
◉	2BL04110	FRONT LEFT COVER	1	1	1	1
◉	2BL04120	REAR LEFT COVER	1	1	1	1
◉	2BL04130	RIGHT COVER	1	1	1	1
◉	2BL04140	COVER CASSETTE	2	2	2	3
◉	2BL04150	LEFT COVER CASSETTE	1	1	1	1
◉	2BL04160	HANDLE CASSETTE	2	2	2	3
	2BL04190	PIN COVER HINGE	1	1	1	1
	2BL04220	MOUNT HINGE	1	1	1	1
◉	2BL04300	LID COVER LEFT	1	1	1	1
◉	2BL04310	PLATE NUMBER	1	1	1	3
	2BL04320	MOUNT TRAY EJECT	1	1	1	1
◉	2BL04330	HOLDER SWITCH	1	1	1	1
	2BL04350	FRONT HINGE COVER P	1	1	1	1
◉	2BL04370	PLATE NUMBER 2	1	1	1	3
	2BL04450	GROUND PLATE INNER L	2	2	2	18
	2BL04460	SPACER WIRE	1	1	1	18
	2BL04480	FRONT COVER HINGE S	1	1	1	1
◉	2BL04510	LEFT COVER MIDDLE 1	1	1	1	6
	2BL04520	SHAFT LEFT COVER M	1	1	1	5
	2BL04540	SHAFT L COVER LOCK M	1	1	1	6
◉	2BL04550	LEVER L COVER LOCK M	2	2	2	6
	2BL04560	SPRING L COVER LOCK	2	2	2	6
	2BL04600	LEVER COVER RELEASE	1	1	1	6
	2BL04620	PLATE LEFT COVER M	1	1	1	6
	2BL04680	STRAP COVER	2	2	2	6
	2BL04700	GROUND PLATE LEFT B	2	2	2	6
	2BL04770	MOUNT HINGE S	1	1	1	2
	2BL04840	PIN COVER HINGE S	1	1	1	1
◉	2BL05010	LABEL BYPASSSIZE(C)		1	1	10
	2BL05020	FRONT LABEL BYPASS	1	1	1	11
	2BL05030	UPPER LABEL BYPASS	1	1	1	11
	2BL05040	LABEL RETARD	1	1	1	10

• Parts with "◉" indicates the Service parts.

SP	Part. No.	Description	Quantity			Fig. No.
			120V	230V	240V	
◉	2BL05050	LAVEL LEFT COVER	1	1	1	6
◉	2BL05060	LABEL BYPASSSIZE(I)	1			10
	2BL05070	LABEL SEP CLEANING	1	1	1	1
	2BL05080	LABEL DRUM	1	1	1	15
	2BL05090	LABEL BYPASS JAM F	1	1	1	13
	2BL05100	LABEL BYPASS JAM R	1	1	1	10
	2BL05110	LABEL HIGH TEMP	1	1	1	6
◉	2BL05120	LABEL CONVEYING JAM	1	1	1	1
	2BL06010	MOUNT A FEED DRIVE	1	1	1	5
	2BL06020	GUIDE A FEED	1	1	1	5
	2BL06030	FRAME VERTICAL FEED 1/4	1	1	1	5
	2BL06040	HOUSING FEED	1	1	1	5
	2BL06050	FRONT RAIL FEED	1	1	1	5
	2BL06060	REAR RAIL FEED	1	1	1	5
◉	2BL06080	ROLLER B FEED	1	1	1	5
◉	2BL06090	ROLLER C FEED	1	1	1	5
◉	2BL06100	LEFT COVER FEED	1	1	1	6
	2BL06110	GUIDE VERTICAL FEED	1	1	1	5
	2BL06120	MOUNT B FEED DRIVE	1	1	1	5
	2BL06130	MOUNT C FEED DRIVE	1	1	1	5
	2BL06140	MOUNT BYPASS DRIVE	1	1	1	5
◉	2BL06150	GEAR Z28 FEED	1	1	1	5
◉	2BL06160	GEAR Z35-15 FEED	1	1	1	5
◉	2BL06170	GEAR Z42 FEED	1	1	1	5
◉	2BL06180	GEAR Z28-P18 FEED	2	2	2	5
◉	2BL06190	GEAR Z25 FEED	1	1	1	5
◉	2BL06200	GEAR Z21-36 FEED	1	1	1	5
	2BL06210	SHAFT FEED PULLEY	2	2	2	6
	2BL06220	EARTH VERTICAL FEED	1	1	1	5
	2BL06230	GROUND PLATE A FEED	1	1	1	5
	2BL06260	FRONT GUIDE REGIST	1	1	1	5
◉	2BL06270	RIGHT ROLLER REGIST	1	1	1	5
	2BL06310	GUIDE ROLLER FRONT	1	1	1	5
◉	2BL06320	BELT CONVEYING	1	1	1	5
	2BL06330	GUIDE B FEED	1	1	1	5
	2BL06340	SPRING FEED	2	2	2	6
	2BL06350	GUIDE ROLLER REAR	1	1	1	5
◉	2BL06360	GEAR Z42 BYPASS	1	1	1	5
◉	2BL06370	GEAR Z30 FEED	1	1	1	5
◉	2BL06380	GEAR Z25 JOINT	1	1	1	5

SP	Part. No.	Description	Quantity			Fig. No.
			120V	230V	240V	
◉	2BL06390	GEAR DU25 JOINT	1	1	1	5
	2BL06410	GROUND PLATE MIDDLE	1	1	1	2
	2BL06440	MOUNT REGIST SWITCH	1	1	1	5
	2BL06450	HOLDER FEED SWITCH	2	2	2	5
	2BL06460	SPRING LEFT COVER	2	2	2	5
◉	2BL06470	PLATE SIZE C		2	2	3
◉	2BL06480	FILM REGIST F	1	1	1	5
	2BL06500	BASE BYPASSFEED(1)	1	1	1	11
	2BL06510	BASE BYPASSUNIT(1)	1	1	1	10
	2BL06520	UPPERGUIDE BYPASS	1	1	1	11
	2BL06530	COVER BYPASSUNIT	1	1	1	10
◉	2BL06540	ROLLER2 BYPASSFEED	1	1	1	11
◉	2BL06560	ROLLER4 BYPASSFEED	1	1	1	11
	2BL06570	MOUNT RAIL	2	2	2	11
	2BL06580	RAIL BYPASS	1	1	1	11
	2BL06590	PULLEY RAIL	8	8	8	2,11
◉	2BL06600	COVER BYPASSTRAY	1	1	1	10
◉	2BL06610	TABLE BYPASS	1	1	1	10
	2BL06640	LIFTPLATE BYPASS	1	1	1	10
	2BL06650	STAY LIFTPLATE	1	1	1	10
	2BL06660	FRONT CURSOR BYPASS	1	1	1	10
	2BL06670	REAR CURSOR BYPASS	1	1	1	10
◉	2BL06680	CAM BYPASS	2	2	2	10
	2BL06690	MOUNT BYPASSDRIVE	1	1	1	10
◉	2BL06720	GEAR 55/15	1	1	1	10
◉	2BL06730	ACTUATOR BYPASSFEED	1	1	1	11
	2BL06740	SHAFT BYPASSFEED	6	6	6	11
	2BL06750	SHAFT RETARD	1	1	1	10
	2BL06760	SHAFT BYPASSCAM	1	1	1	10
	2BL06770	SHAFT BYPASS	1	1	1	10
	2BL06780	SPRING BYPASSFEED	12	12	12	11
	2BL06790	GROUNDPLATE BYPASS	1	1	1	11
◉	2BL06800	SPRING BYPASS	1	1	1	11
◉	2BL06810	BELT BYPASSFEED	1	1	1	11
◉	2BL06820	PULLEY25 BYPASSFEED	2	2	2	11
	2BL06830	DIAL BYPASSFEED	1	1	1	11
	2BL06840	SPRING BYPASS RET	1	1	1	2
	2BL06850	JOINT RETARD	1	1	1	10
	2BL06860	SPRING RETARD	1	1	1	10
	2BL06870	SPRING JOINTRETARD	1	1	1	10

• Parts with "◉" indicates the Service parts.

SP	Part. No.	Description	Quantity			Fig. No.
			120V	230V	240V	
	2BL06880	FILM BYPASS	2	2	2	10
◉	2BL06910	PLATE SIZE IN	2			3
	2BL06920	SHAFT FEED A	1	1	1	5
◉	2BL06930	PULLEY FEED	4	4	4	5
	2BL06940	EARTH PUSH SWITCH	1	1	1	5
	2BL06950	DUMPER LEFT COVER	1	1	1	5
	2BL06960	STRAP RELEASE	1	1	1	6
	2BL06970	FILM REGIST FF	1	1	1	5
	2BL13060	REAR ADJUSTING LSU	1	1	1	12
	2BL13070	FRONT ADJUSTING LSU	1	1	1	12
	2BL13120	FRONT MOUNT HOUSING	1	1	1	12
	2BL13250	ADJUSTING PLT LSU	1	1	1	12
	2BL13290	SPRING FIX LSU	3	3	3	12
	2BL14010	ROLLER MAGNET	1	1	1	13
	2BL14020	CASE DLP	1	1	1	13
	2BL14030	BLADE DLP	1	1	1	13
	2BL14040	UPPER COVER DLP	1	1	1	13
	2BL14050	REAR COVER DLP	1	1	1	13
	2BL14060	COVER DROWER DLP	1	1	1	13
	2BL14090	SPIRAL C DLP	1	1	1	13
	2BL14110	GEAR 23/18	1	1	1	13
	2BL14120	GROUND PLATE A DLP	1	1	1	13
	2BL14130	GROUND PLATE B DLP	1	1	1	13
	2BL14140	MOUNT CAM	2	2	2	5
	2BL14150	SHAFT A DLP	3	3	3	13
	2BL14160	SHAFT B DLP	1	1	1	13
	2BL14170	HANDLE DLP	1	1	1	13
	2BL14180	FRONT ARM RAIL	1	1	1	13
	2BL14190	REAR ARM RAIL	1	1	1	13
	2BL14200	RAIL DLP	1	1	1	13
	2BL14210	LEVER DLP	1	1	1	13
	2BL14220	PIN LEVER DLP	1	1	1	13
	2BL14230	SHAFT CAM	1	1	1	5
	2BL14240	CAM DLP	2	2	2	5
	2BL14250	GEAR 18	1	1	1	5
	2BL14260	FRANGE MAGNET ROLLER	1	1	1	13
	2BL14280	FRONT SEAL DLP	1	1	1	13
	2BL14290	REAR SEAL DLP	1	1	1	13
	2BL14320	FILM SENSOR	1	1	1	13
	2BL14340	GEAR 17H	1	1	1	13

SP	Part. No.	Description	Quantity			Fig. No.
			120V	230V	240V	
	2BL14350	GROUND PLATE RAIL	1	1	1	13
	2BL14370	GEAR Z15	2	2	2	13
	2BL14390	PLATE MAGNET ROLLER	2	2	2	13
	2BL14400	SPACER SEAL	2	2	2	13
	2BL14410	SPRING CAM	2	2	2	5
	2BL14420	SEAL UPPER COVER A	1	1	1	13
	2BL14430	SEAL UPPER COVER B	1	1	1	13
	2BL14440	SEAL UPPER COVER C	1	1	1	13
	2BL14450	BEARING MAGNETROLLER	2	2	2	13
	2BL14460	SPIRAL D DLP	1	1	1	13
	2BL14470	SPIRAL E DLP	1	1	1	13
	2BL14480	SEAL WIRE	3	3	3	13
	2BL14490	FILM UPPER COVER A	1	1	1	13
	2BL14500	FILM UPPER COVER B	1	1	1	13
	2BL14540	SPACER MAG ROLLER	1	1	1	13
	2BL14600	MAGNET BLADE	1	1	1	13
	2BL14610	BUSH SCRAPER	2	2	2	13
	2BL14620	GEAR SCRAPER Z18S	2	2	2	13
	2BL14630	GEAR Z34S-Z16S	2	2	2	13
	2BL14640	GEAR Z36S-Z23S	1	1	1	13
	2BL14650	GEAR Z36	1	1	1	13
	2BL14660	STUD SCREW S	2	2	2	13
	2BL14670	PULLEY DLP ASSY	2	2	2	13
	2BL14690	SEAL SCRAPER	2	2	2	13
	2BL14700	SEAL SCRAPER MID	2	2	2	13
	2BL14710	SEAL AGITATOR	2	2	2	13
	2BL14720	SEAL CASE LA	1	1	1	13
	2BL14730	SEAL CASE FA	1	1	1	13
	2BL14740	SEAL CASE RA	1	1	1	13
	2BL14750	SEAL CASE RB	1	1	1	13
	2BL14760	SEAL CASE LB	1	1	1	13
	2BL14770	SEAL CASE LC	1	1	1	13
	2BL14780	SEAL CASE LD	1	1	1	13
	2BL14790	SEAL CASE FB	1	1	1	13
	2BL14800	SEAL UPPER COVER D	1	1	1	13
	2BL14810	SEAL SHUTTER C	1	1	1	13
	2BL14820	SEAL CASE LE	1	1	1	13
	2BL16010	BASE CONVEYING 1	1	1	1	7
◉	2BL16020	ROLLER REGIST L	1	1	1	7
	2BL16030	STOPPER BUSH	2	2	2	7

• Parts with "◉" indicates the Service parts.

SP	Part. No.	Description	Quantity			Fig. No.
			120V	230V	240V	
◉	2BL16040	SPRING REGIST F	1	1	1	7
◉	2BL16050	SPRING REGIST R	1	1	1	7
◉	2BL16060	GEAR REGIST Z18	1	1	1	7
	2BL16070	SHAFT FEED	2	2	2	7
◉	2BL16080	PULLEY FEED	8	8	8	6,7
	2BL16090	SPRING FEED	2	2	2	7
	2BL16100	STRAP CONVEYING A	1	1	1	7
	2BL16110	STRAP CONVEYING B	1	1	1	7
	2BL16120	PLATE PAPER GUIDE	1	1	1	7
◉	2BL16130	GUIDE REGIST F	2	2	2	7
	2BL16140	GUIDE FEED F	2	2	2	7
	2BL16150	PLATE TRANS B	1	1	1	7
	2BL16160	PLATE TRANS UNIT GND	1	1	1	7
	2BL16170	PLATE SEPARATION B	1	1	1	7
◉	2BL16180	HANDLE CONVEYING	1	1	1	7
◉	2BL16190	HOOK CONVEYING	1	1	1	7
	2BL16200	SPRING CONVEYING	1	1	1	7
	2BL16210	SHAFT CONVEYING	1	1	1	7
◉	2BL16220	BRUSH CLEANER	1	1	1	1
	2BL16230	SPRING CONV OPEN	1	1	1	5
	2BL16240	SPRING CONVEYING B	1	1	1	7
	2BL17010	HOUSING TRANSFER	1	1	1	7
◉	2BL17020	ROLLER TRANSFER	1	1	1	7
◉	2BL17030	COLLAR TRANS ROLLER	2	2	2	7
◉	2BL17040	PULLEY TRANS ROLLER	2	2	2	7
	2BL17050	PLATE TRANS UNIT	1	1	1	7
◉	2BL17060	BUSH TRANS ROLLER	2	2	2	7
◉	2BL17070	SPRING TRANS F	1	1	1	7
◉	2BL17080	SPRING TRANS R	1	1	1	7
◉	2BL17090	GEAR TRANS Z25H	1	1	1	7
	2BL17100	HOLDER SEPARATION	1	1	1	7
◉	2BL17110	BRUSH SEPARATION	1	1	1	7
	2BL17140	SHEET TRANS GUIDE	1	1	1	7
	2BL17150	LEFT GUIDE TRANSFER	1	1	1	7
	2BL17160	RIGHT GUIDE TRANSFER	1	1	1	5
◉	2BL17170	BUSHING 8	2	2	2	7
	2BL17180	SPRING LEFT GUIDE	2	2	2	7
	2BL17190	REINFORCEMENT TRANS	1	1	1	7
	2BL18010	HOUSING DRUM	1	1	1	15
	2BL18020	FRONT COVER DRUM	1	1	1	15

SP	Part. No.	Description	Quantity			Fig. No.
			120V	230V	240V	
	2BL18030	REAR COVER DRUM	1	1	1	15
	2BL18040	UPPER COVER DRUM	1	1	1	15
	2BL18060	SPIRAL CLEANING	1	1	1	15
◉	2BL18070	LOWER SEAL CLEANING	1	1	1	15
	2BL18080	ROLLER CLEANING	1	1	1	15
	2BL18130	TERMINAL DRUM PCB	1	1	1	15
	2BL18140	TERMINAL CHARGER PCB	1	1	1	15
◉	2BL18150	GEAR CL ROLLER 16/15	1	1	1	15
◉	2BL18160	GEAR SPIRAL 16	1	1	1	15
◉	2BL18170	GEAR IDLE 15	1	1	1	15
	2BL18190	SPRING DRUM	1	1	1	15
	2BL18200	FRONT SEAL DRUM	1	1	1	15
	2BL18210	REAR SEAL DRUM	1	1	1	15
	2BL18240	SHUTTER DISPOSAL	1	1	1	15
	2BL18250	HOLDER SHUTTER	1	1	1	15
	2BL18260	SPRING SHUTTER	1	1	1	15
	2BL18270	HOLDER CLAW	5	5	5	15
◉	2BL18300	BLADE CLEANING	1	1	1	15
◉	2BL18320	HANDLE DRUM	1	1	1	15
	2BL18450	REAR BUSHING SPIRAL	1	1	1	15
	2BL18460	LEVER MC	1	1	1	15
	2BL18470	SPRING MC LOCK	1	1	1	15
	2BL18520	BUSHING CL ROLLER A	2	2	2	15
	2BL18530	HOLDER SCRAPER	1	1	1	15
	2BL18550	UPPER SEAL CLEANING	1	1	1	15
◉	2BL18560	SPONGE LOWER SEAL	1	1	1	15
	2BL18570	SPONGE DRUM	2	2	2	15
	2BL18600	SEAL SHUTTER	1	1	1	15
	2BL18620	SCRAPER CL ROLLER A	1	1	1	15
◉	2BL18630	BUSHING DRUM A	2	2	2	15
	2BL18650	ARM CL ROLLER A	2	2	2	15
	2BL18660	GND PLATE DRUM A	1	1	1	15
	2BL18690	SHAFT DRUM A	1	1	1	15
	2BL18700	RIGHT FILM DRUM	4	4	4	15
	2BL18710	TAPE SCRAPER	1	1	1	15
	2BL18730	SPACER BLADE	1	1	1	15
	2BL18740	JOINT DRUM	1	1	1	15
	2BL18750	SPRING DRUM JOINT	1	1	1	15
	2BL18760	SPRING CLEANING ARM	2	2	2	15
	2BL18770	SPONGE BLADE	1	1	1	15

• Parts with "◉" indicates the Service parts.

SP	Part. No.	Description	Quantity			Fig. No.
			120V	230V	240V	
◉	2BL20010	UPPER FRAME FIXING	1	1	1	14
	2BL20020	LOWER FRAME FIXING	1	1	1	14
	2BL20030	FRONT FRAME FIXING	1	1	1	14
	2BL20040	REAR FRAME FIXING	1	1	1	14
◉	2BL20060	ROLLER PRESS	1	1	1	14
◉	2BL20070	GEAR 55 HEAT ROLLER	1	1	1	14
◉	2BL20080	CLAW HEAT ROLLER	6	6	6	14
	2BL20090	MOUNT REAR GUIDE	1	1	1	6
	2BL20100	REAR GUIDE FIXING	1	1	1	6
◉	2BL20130	HEATER M120 FIXING	1			14
◉	2BL20140	HEATER S120 FIXING	1			14
◉	2BL20150	HEATER M230 FIXING		1	1	14
◉	2BL20160	HEATER S230 FIXING		1	1	14
	2BL20170	FRONT PRESSING PLATE	1	1	1	14
	2BL20180	REAR PRESSING PLATE	1	1	1	14
	2BL20200	STOPPER HEAT ROLLER	2	2	2	14
	2BL20210	MOUNT THERMISTOR	1	1	1	14
	2BL20230	PLATE SPRING FIXING	1	1	1	14
◉	2BL20240	SPRING CLAW	6	6	6	14
◉	2BL20260	GEAR FIXING Z33	1	1	1	14
◉	2BL20270	THERMISTOR FIXING	1	1	1	14
◉	2BL20280	THERMOSTAT 190 FIXING	1	1	1	14
	2BL20290	COVER FIXING WIRE	1	1	1	14
	2BL20300	UPPER COVER FRAME	1	1	1	14
	2BL20310	LOWER COVER FRAME	1	1	1	14
	2BL20320	HOLDER PRESS SE	1	1	1	14
	2BL20330	STATIC ELIMINATOR PRESS	1	1	1	14
	2BL21010	FRAME EXIT	1	1	1	8
◉	2BL21020	ROLLER EXIT	1	1	1	8
◉	2BL21030	ROLLER FEED SHIFT	1	1	1	8
	2BL21040	FRAME EXIT UP	1	1	1	8
	2BL21060	SHAFT EXIT PULLEY	2	2	2	8
	2BL21070	SPRING EXIT PULLEY	4	4	4	8
◉	2BL21080	GUIDE EXIT CHANGE	1	1	1	8
	2BL21100	LEVER GUIDE CHANGE	1	1	1	8
◉	2BL21120	ACTUATOR EXIT R	1	1	1	8
◉	2BL21130	ACTUATOR EXIT L	1	1	1	8
	2BL21160	BKT DISCHARGER	1	1	1	8
	2BL21170	PLATE EARTH EXIT F	1	1	1	8
	2BL21180	PLATE EARTH EXIT R	1	1	1	8

SP	Part. No.	Description	Quantity			Fig. No.
			120V	230V	240V	
	2BL21190	BKT SOLENOID	1	1	1	8
	2BL21200	JOINT EXIT	1	1	1	8
◉	2BL21210	PULLEY ONEWAY T30	1	1	1	8
◉	2BL21220	GEAR EXIT Z19	1	1	1	8
◉	2BL21230	PULLEY EXIT T30	1	1	1	8
◉	2BL21240	BELT EXIT P2M212	1	1	1	8
	2BL21250	SPRING ACTUATOR R	1	1	1	8
	2BL21260	SPRING ACTUATOR L	1	1	1	8
	2BL21270	SPRING FEED SHIFT	1	1	1	8
	2BL21290	GUIDE EXIT L	1	1	1	6
	2BL21320	GUIDE LEFT COVER M	1	1	1	6
◉	2BL21330	PULLEY FEED SHIFT	4	4	4	6
	2BL21340	SPRING CHANGE PULLEY	4	4	4	6
	2BL21350	GUIDE DU FEED R	1	1	1	1
	2BL21360	SHAFT CHANGE PULLEY	2	2	2	6
	2BL21370	LEVER GUIDE CHANGE B	1	1	1	8
◉	2BL21390	GEAR EXIT JOINT Z26S	1	1	1	8
	2BL21400	SPRING EXIT JOINT	1	1	1	8
	2BL21410	GUIDE FEED SHIFT L	1	1	1	6
	2BL21420	PIN EXIT	2	2	2	8
◉	2BL21430	GEAR EXIT Z20	1	1	1	8
◉	2BL21440	SPRING EXIT CHANGE	1	1	1	8
	2BL21450	PULLEY EXIT B	4	4	4	8
	2BL21460	FILM WIRE PROTECT	1	1	1	6
	2BL21470	PLATE EARTH CHANGE	1	1	1	8
	2BL22010	PLATE DRIVE F	1	1	1	17
	2BL22030	PLATE DRIVE R	1	1	1	17
◉	2BL22050	GEAR DRUM Z70H	1	1	1	17
	2BL22140	GUIDE DLP	1	1	1	17
	2BL22150	BRACKET CLUTCH	1	1	1	17
◉	2BL22160	GEAR DRUM Z76H-Z30H	1	1	1	17
◉	2BL22170	PLATE GUIDE DRUM	1	1	1	17
◉	2BL22180	GEAR Z37H-Z28H	1	1	1	17
◉	2BL22190	GEAR Z50H	1	1	1	17
◉	2BL22200	GEAR Z63H-Z45S	1	1	1	17
◉	2BL22210	GEAR JOINT Z32S	1	1	1	17
◉	2BL22220	GEAR Z36S-Z31H	1	1	1	17
◉	2BL22230	GEAR Z34H	1	1	1	17
◉	2BL22240	SPRING JOINT FUSER	1	1	1	17
	2BL22310	PLATE DRIVE FEED	1	1	1	16
◉	2BL22320	GEAR Z76H-Z35S	1	1	1	16

• Parts with "◉" indicates the Service parts.

SP	Part. No.	Description	Quantity			Fig. No.
			120V	230V	240V	
◉	2BL22330	GEAR Z41S-Z24S-P30	2	2	2	16
◉	2BL22350	BELT DRIVE FEED	1	1	1	16
	2BL22360	BRACKET CLUTCH FEED	2	2	2	16
	2BL22370	PLATE DRIVE MPF A	1	1	1	16
	2BL22380	PLATE DRIVE MPF B	1	1	1	16
◉	2BL22400	BELT DRIVE MPF	1	1	1	16
◉	2BL22420	GEAR Z41S-P18	1	1	1	16
	2BL22440	PLATE DRIVE CONT.A	1	1	1	16
	2BL22450	PLATE DRIVE CONT.B	1	1	1	16
	2BL22460	SHAFT DRIVE CONT	1	1	1	16
◉	2BL22480	GEAR Z24S-P40	1	1	1	16
◉	2BL22490	GEAR Z40S-Z25S	1	1	1	16
◉	2BL22500	COUPLING CONTAINER		1	1	16
◉	2BL22510	SPRING DRIVE CONT.	1	1	1	16
◉	2BL22520	CLUTCH CONTAINER	1	1	1	16
◉	2BL22530	GEAR Z41S-P15	1	1	1	16
◉	2BL22540	GEAR Z60S-P20	1	1	1	16
◉	2BL22550	GEAR Z40S-Z32S	1	1	1	16
◉	2BL22560	PULLEY CONT. DRIVE	1	1	1	16
◉	2BL22570	BUSH DRIVE CONT 8	2	2	2	16
	2BL22580	COLLAR BELT	6	6	6	8,16
◉	2BL22590	BELT DRIVE CONTAINER	1	1	1	16
◉	2BL22630	GEAR EXIT Z30S	1	1	1	17
	2BL22640	PLATE DRIVE EXIT	1	1	1	17
◉	2BL22710	GEAR Z76H-Z35H	1	1	1	17
◉	2BL22780	GEAR Z24S	1	1	1	17
◉	2BL22800	GEAR Z47S-Z28S	1	1	1	17
	2BL22810	PLATE TENSION A	1	1	1	16
	2BL22820	SPRING PULLEY	1	1	1	16
	2BL22830	PULLEY TENSION	1	1	1	16
	2BL22840	SHAFT DRIVE DRUM FW	1	1	1	17
	2BL22850	RETAINER FLYWHEEL	1	1	1	17
	2BL22860	FLYWHEEL 190	1	1	1	17
	2BL22870	WEIGHT 190	1	1	1	17
	2BL22880	FILM BKT CLUTCH	1	1	1	17
	2BL23020	DUCT DRUM	1	1	1	17
	2BL23030	DUCT DLP	1	1	1	17
	2BL23040	LID DLP DUCT	1	1	1	17
	2BL23050	DUCT MAIN A	1	1	1	17
	2BL23060	DUCT MAIN B	1	1	1	17

SP	Part. No.	Description	Quantity			Fig. No.
			120V	230V	240V	
	2BL23070	MOUNT REAR FAN	1	1	1	17
	2BL23080	FILM DUCT DRUM	1	1	1	17
	2BL23090	FILTER DUST SHIELD	1	1	1	12
	2BL23100	FILM COOLING	1	1	1	17
	2BL23110	GROUND PLATE LEFT FAN	2	2	2	6
	2BL26040	MOUNT POWER PCB	1	1	1	18
	2BL26050	CASE HIGH VOLTAGE	1	1	1	18
	2BL26060	PIN TERMINAL	4	4	4	18
	2BL26070	SPRING TERMINAL	1	1	1	18
	2BL26080	GROUND PLATE HV	1	1	1	18
	2BL26110	LEFT MOUNT I/L	1	1	1	18
	2BL26120	LEFT WORK PLATE I/L	1	1	1	18
	2BL26150	MOUNT BASE TERMINAL	1	1	1	17
	2BL26160	PLATE TRANSFER A	1	1	1	17
	2BL26170	PLATE SEPARATION A	1	1	1	17
	2BL26200	MOUNT DRUM DRAWER	1	1	1	18
	2BL26240	MOUNT POWER CORD 120	1			18
	2BL26250	MOUNT INLET CORD 230		1	1	18
	2BL26270	SPRING TERMINAL T	3	3	3	18
	2BL26280	SHAFT I/L	1	1	1	18
	2BL26290	MOUNT FIXING DRAWER	1	1	1	18
	2BL27030	WIRE DRAWER	1	1	1	18
	2BL27050	WIRE PRIMARY	1	1	1	18
	2BL27110	WIRE DEVELOPING	1	1	1	13
	2BL27120	WIRE CONTAINER	1	1	1	17
	2BL27130	WIRE FIXING UNIT	1	1	1	14
	2BL27150	WIRE BYPASS UNIT	1	1	1	10
	2BL27170	WIRE REGISTRATION	1	1	1	5
	2BL27180	WIRE CONT SW	1	1	1	16
	2BL27190	WIRE CONVEYING	1	1	1	5
	2BL27210	WIRE BYPASS TRAY	1	1	1	10
	2BL27240	WIRE FEED 1	1	1	1	5
	2BL27250	WIRE TONER DISPOSAL	1	1	1	18
	2BL27280	WIRE FINISHER GND	1	1	1	18
	2BL27290	WIRE BYPASS FEED PI	1	1	1	18
	2BL27300	WIRE CONVEYING FAN	1	1	1	6
	2BL27340	WIRE REAR FAN	1	1	1	17
◉	2BL27410	SWITCH CONVEYING	3	3	3	5
◉	2BL27420	SWITCH REGISTRATION	1	1	1	5
◉	2BL27450	SWITCH PI	5	5	5	8,9,10,18

• Parts with "◉" indicates the Service parts.

SP	Part. No.	Description	Quantity			Fig. No.
			120V	230V	240V	
◉	2BL27480	SWITCH INTERLOCK	2	2	2	18
◉	2BL27500	CLUTCH FEED	7	7	7	5,10,16,17
◉	2BL27510	SOLENOID TONER	1	1	1	16
◉	2BL27520	FAN COOLING(M)	1	1	1	17
◉	2BL27530	FAN COOLING(C)	2	2	2	17
◉	2BL27540	MOTOR MAIN	1	1	1	17
◉	2BL27550	MOTOR SUB	1	1	1	16
◉	2BL27560	MOTOR EJECT	1	1	1	17
◉	2BL27580	LIFT MOTOR	2	2	2	16
◉	2BL27610	FAN COOLING(80-15)	2	2	2	18
◉	2BL27620	FAN COOLING(60-15)	3	3	3	6
	2BL27690	SHEET RADIATOR(LSU)	2	2	2	12
◉	2BL27700	FAN COOLING(60-25)	1	1	1	12
◉	2BL28030	POWER SOURCE PCB 100	1			18
◉	2BL28040	POWER SOURCE PCB 200		1	1	18
◉	2BL28050	HIGH VOLTAGE PCB	1	1	1	18
◉	2BL68040	CLAW SEPARATION ASSY	5	5	5	15
◉	2BL68140	BYPASS FEED UNIT	1	1	1	11
◉	2BL68150	VERTICAL FEED ASS'Y	1	1	1	5
◉	2BL68160	MIDDLE FEED ASS'Y	1	1	1	5
◉	2BL68190	LAMP CLEANING ASSY	1	1	1	15
◉	2BL68210	BYPASS UNIT (C)		1	1	10
◉	2BL68250	BYPASS UNIT (I)	1			10
◉	2BL93060	DR-700 MAIN DRIVE ASSY	1	1	1	17
◉	2BL93090	MC-700 MAIN CHARGER	1	1	1	15
	2BL93130	TB-700 TONER DISPOSAL TANK ASS'Y	1	1	1	21
	2BM17920	BUSH POM	1	1	1	5
	2BM20420	NUT FUSER	4	4	4	14
◉	2BM27890	HUMIDITY SENSOR	1	1	1	18
◉	29806810	BUSHING,6 REGISTRATION	6	6	6	4
◉	29812291	CUSHION,CONTACT GLASS	9	9	9	9
	29927231	POWER CODE AS(240)			1	18
◉	3AZ21890	SOLENOID,FEED SHIFT	1	1	1	8
	3A205010	LABEL,CAUTION GEAR	1	1	1	10
	3A206100	ARM,BYPASS PE	1	1	1	10
◉	3A206130	JOINT,BYPASS PICKUP	1	1	1	10
	3A206170	HOLDER,RETARD	1	1	1	10
	3A206210	MOUNT,BYPASS PE SWITCH	1	1	1	10
	3A206461	MOUNT,BYPASS PCB	1	1	1	10
	3B228050	PCB DIMM5	1	1	1	18

SP	Part. No.	Description	Quantity			Fig. No.
			120V	230V	240V	
◉	33420210	BEARING,HEAT ROLLER	2	2	2	14
	33420220	BUSHING,HEAT ROLLER	2	2	2	14
◉	33906070	TORQUE LIMITER,PAPER FEED	2	2	2	4
◉	33906160	GEAR 16,PAPER FEED	3	3	3	4,10
◉	33906430	TORQUE LIMITER,BYPASS	1	1	1	10
◉	33906660	RIGHT PULLEY,FEED	6	6	6	11
◉	33906990	SWITCH,BYPASS SIZE DETECTION	1	1	1	10
◉	33907100	RACK,CASSETTE	6	6	6	3,10
	33907110	TERMINAL,PAPER SIZE PCB	3	3	3	3,10
	33907170	DETECTION PLATE,PAPER SIZE	2	2	2	3
◉	33907210	CUSHION,CASSETTE WORK PLATE	4	4	4	3
	33915180	TONER EMPTY DETECTION SENSOR	1	1	1	13
	33927450	RETAINING PIN,DRAWER	10	10	10	2,18
◉	33928111	SIZE DETECTION PCB	3	3	3	3,10
◉	33960020	HEATER,CASSETTE (240)		1	1	21
◉	33973300	STOPPER 7,CARTRIDGE	1	1	1	5
◉	34806040	LOWER BUSHING,PAPER FEED	2	2	2	4
◉	34806140	STOPPER 4	21	21	21	4,5,7,16
◉	34806150	STOPPER 5	13	13	13	5,10,16,17
◉	34806480	STOPPER 6	24	24	24	5,8,10,11
						16
	34806490	FRICTION PLATE,BYPASS LEADING FEED	1	1	1	10
	34820310	STATIC ELIMINATOR,HEAT ROLLER	1	1	1	14
◉	34821100	STATIC ELIMINATOR,EJECT	1	1	1	8
◉	34860030	HEATER,CASSETTE(120)	1			21
◉	34907150	PULLEY,CASSETTE	4	4	4	3
	34907380	SPRING,CASSETTE	2	2	2	10
	34918200	SPRING,THRUST	1	1	1	9
	34920170	FULCRUM PIN,FIXING	2	2	2	6
◉	35327400	SWITCH,FEED	4	4	4	4
◉	35912010	CONTACT GLASS	1	1	1	9
◉	35912060	PULLEY,SCANNER DRUM	2	2	2	9
	35912200	STANDARD PLATE,SHADING	1	1	1	9
	35912210	SPRING,MIRROR HOLDER	6	6	6	9
	35912360	GUIDE FFC2	1	1	1	9
◉	35912490	FRONT ORIGINAL SIZE INDICATOR	1	1	1	9
◉	35912531	SPONGE,ORIGINAL SIZE INDICATOR	1	1	1	9
◉	35920130	BEARING,PRESSURE	2	2	2	14
◉	35927290	SENSOR,ORIGINAL DETECTION	1	1	1	9
◉	35927420	SWITCH,SIZE	5	5	5	5,16,18

• Parts with "◉" indicates the Service parts.

SP	Part. No.	Description	Quantity			Fig. No.
			120V	230V	240V	
◉	35968110	STOPPER WIRE ASS'Y SP	2	2	2	21
◉	36222250	GEAR 30,IDLE	1	1	1	5
◉	36720493	CLAW,PRESS ROLLER	4	4	4	6
◉	36722860	GEAR 18	2	2	2	5,11
	41525016	SOCKET,KEY COUNTER	2	2	2	21
	41529210	SOCKET ASS'Y,KEY COUNTER	1	1	1	21
◉	45729206	GEAR,TONER FEED ROLLER	2	2	2	4
◉	45729416	GEAR,TONER ROLLER	2	2	2	10
	49028116	BUSHING 6,CLEANING UNIT	2	2	2	13
◉	5AAYTK20**03	GRID CLEANER 3 ASSY	1	1	1	21
◉	5MVG148DN027	GEAR Z37S	1	1	1	17
◉	5MVX421DN003	LOCK COVER RIGHT	2	2	2	5
◉	5NVG137DB02	GEAR M FEED Z25	4	4	4	16
◉	5PLPXHLAPKX	TR-700 TRANSFER ASS'Y	1	1	1	7
◉	5PLPXHNAPKX	LK-700 SCANNER UNIT	1	1	1	12
	60804120	MAGNET CATCH	1	1	1	1
	60904280	ORIGINAL POCKET	1	1	1	20
	60904310	HINGE,ORIGINAL HOLDER	2	2	2	20
◉	60907170	CUSHION,CASSETTE R	4	4	4	3
◉	61706770	UPPER PULLEY,BYPASS	1	1	1	10
	63818250	REAR BUSHING,TONER DISPOSAL ROLLER	1	1	1	15
	63827080	FERRITE CORE	1	3	3	18
	65009050	SPRING,DEVELOPING ROCK	2	2	2	6
◉	65914120	GEAR 18,IDLE DEVELOPING	3	3	3	3,10
◉	66006810	GEAR,16 BYPASS PULLEY	1	1	1	10
	66007120	SPRING,CURSOR C	2	2	2	3
◉	66007310	PIN,CASSETTE WORK PLATE	3	3	3	10
	66012180	ACTUTATION PLATE,ORIGINAL DETECTIO	1	1	1	20
	66060022	RETAINER,KEY COUNTER COVER	1	1	1	21
	66060030	RETAINER,KEY COUNTER	1	1	1	21
	66060040	MOUNT,KEY COUNTER	1	1	1	21
◉	66106080	SPRING,PAD	2	2	2	3
◉	66107100	PAD,CASSETTE	2	2	2	3
◉	66127010	SWITCH,COVER OPEN	2	2	2	18
◉	67322230	BUSHING 8	26	26	26	5,8,10,11
						16
◉	68320310	SPRING,SEPARATION CLAW	4	4	4	6
	69312110	PLATE SPRING,ORIGINAL HOLDER	2	2	2	20
◉	72107160	BUSHING 6,LOWER REGISTRATION ROLLE	2	2	2	7
	72114320	PIN,DEV.UNIT HANDLE	1	1	1	16

SP	Part. No.	Description	Quantity			Fig. No.
			120V	230V	240V	
◉	72127100	PI SWITCH,OPTICAL SECTION	1	1	1	9
◉	72321350	GEAR 30, FD EJECT IDLE	1	1	1	10
◉	72914480	REAR BUSHING,DEVELOPING ROLLER (B)	2	2	2	9
◉	73210450	BUSH, 6	3	3	3	8,10
	73912281	PIN,ORIGINAL HOLDER	2	2	2	6
	74315200	PIN,TONER HOPPER	1	1	1	1
◉	75718040	BUSHING,CLEANING BLADE SHAFT	1	1	1	7
	76610320	PIN TENSION PULLEY	3	3	3	12
	77906210	CASSETTE STOPPER	2	2	2	3
	77906291	HOLDER,CASSETTE STOPPER	2	2	2	2
	79904140	ORIGINAL HOLDER SPACER	2	2	2	20
◉	82142540	KEY COUNTER	1	1	1	21
	B1303080	BINDING SCREW BVM3X8 (BLACK)	1	1	1	21
	B1304060	BINDING SCREW BVM4X6 (BLACK)	2	2	2	21
	B1304300	BINDING SCREW BVM4X30 (BLACK)	1	1	1	21
	B2303060	COUNTER-SUNK HEAD SCREW BFHM3X6 (B	2	2	2	21
	B4104060	TRIPLE SCREW M4X6(CHROMIUM)	1	1	1	21
	B4304060	TRIPLE SCREW M4X6 (BLACK)	4	4	4	21
	B4304100	TRIPLE SCREW M4X10 (BLACK)	2	2	2	21
	B4304200	TRIPLE SCREW M4X20(BLACK)	1	1	1	21
	C2303000	NUT BNM3 (BLACK)	1	1	1	21
	G3169000	BEARING 6900ZZNR	1	1	1	17
	J0074010	POSITIVE CONNECTOR,#250,172076-1		2	2	18
	J0074910	POSITIVE CONTACTOR,#250,170334-1		2	2	18
	J0220040	PLUG EL 4P,ELP-04V	1	1	1	21
	J0326120	CASE,54082-1215(MOLEX)	1	1	1	18
	J0388460	RECEPTACLE,52918-4615(MOLEX)	1	1	1	9
◉	J0463080	PLUG,QR/P15-8S-C(HIROSE)	4	4	4	3,4
◉	J0464080	RECEPTACLE,QR/P15-8S-C(02)(HIROSE)	4	4	4	2,18
	J5016030	CASE,BU03P-TR-PC-H(JST)	1	1	1	5
	J5016050	CASE,BU05P-TR-PC-H(JST)	1	1	1	18
	J5016120	CASE,BU12P-TR-PC-H(JST)	1	1	1	18
	J5016130	CASE,BU13P-TR-PC-H(JST)	1	1	1	18
	J7340100	RECEPTACLE,9715S-10A(IRS)	2	2	2	13,18
	L0023070	ROUND TYPE TERMINAL,173636-1		1	1	18
	L0023080	ROUND TYPE TERMINAL,173638-1	1			18
	M1203490	STRAIN RELEAF BUSHING,SR-7K-2	1			18
◉	M1652030	FUSE,23702.5(LITTEL-FUSE)	1			18
◉	M1652040	FUSE,21502.5(LITTEL-FUSE)		1	1	18
◉	M1656050	FUSE,21506.3(LITTEL-FUSE)		1	1	18

• Parts with "◉" indicates the Service parts.

SP	Part. No.	Description	Quantity			Fig. No.
			120V	230V	240V	
◉	M1658030	FUSE,215008(LITTEL-FUSE)		1	1	18
◉	M1660010	FUSE,237010(LITTEL)	1	1	1	18
	M2104210	EDGING,EDS-2	5	5	5	10,18
	M2104220	EDGING,EDS-1717U	3	3	3	9
	M2104280	EDGING,EDS-25L(KITAGAWA)	1	1	1	18
	M2104350	EDGING,EDS-0607M(KITAGAWA)	3	3	3	2,8,19
	M2105740	MINIATURE CLAMP,UAMS-05S-2	4	4	4	9,10,16
	M2107120	BINDING BAND SG-130	4	4	4	18,21
	M2108080	SPACER,KGPS-3S	1	1	1	16
	M2108120	SPACER,KGLS-4S	2	2	2	18
	M2108670	SPACER,KGPS-6RF(KITAGAWA)	1	1	1	18
	M2109010	WIRE SADDLE,WS-2NS	36	36	36	16,17,18
	M2109020	WIRE SADDLE,WS-2WS	1	1	1	18
	M2109330	WIRE SADDLE,YMC-10-0(KITAGAWA)	23	23	23	2,5,9,12 16,17,18
	M2109350	WIRE SADDLE,YMC-15-0(KITAGAWA)	1	1	1	18
	M2109370	WIRE SADDLE,RLWS-1515T V0(KITAGAWA	3	3	3	10
	M2109400	WIRE SADDLE,RLWS-2020T V0(KITAGAWA	2	2	2	18
◉	M8955000	FUSE,MRT5(BEL FUSE)	1	1	1	18

• Parts with "◉" indicates the Service parts.

CLASSIFICATION OF THE SCREWS IN ILLUSTRATION

REF.	ITEM #	DESCRIPTION
AAK	B0003250	ROUND HEAD SCREW M3X25
ABE	B0304060	ROUND HEAD SCREW M4X6 (BLACK)
APE	B3013960	ROUND HEAD TAP-TIGHT SCREW P,M3X06
AZB	B0024120	ROUND HEAD SCREW WITH SW.W M4X12
BAA	B1003040	BINDING SCREW,CVM3X4
BAB	B1003060	BINDING SCREW CVM3X6
BAC	B1003080	BINDING SCREW M3X8
BAE	B1005080	BINDING SCREW M5X8
BAL	B1003050	BINDING SCREW CVM3X5
BAN	B1004060	BINDING SCREW CVM4X6
BAS	B1000030	BINDING SCREW CVM 2.6X03
BAW	B1004080	BINDING SCREW M4X8
BBA	B1303040	BINDING SCREW BVM3X4 (BLACK)
BBB	B1303050	BINDING SCREW BVM3X5 (BLACK)
BBC	B1303100	BINDING SCREW BVM3X10 (BLACK)
BBD	B1304040	BINDING SCREW BVM4X4 (BLACK)
BBE	B1304060	BINDING SCREW BVM4X6 (BLACK)
BBF	B1304080	BINDING SCREW BVM4X8 (BLACK)
BBJ	B1304200	BINDING SCREW BVM4X20 (BLACK)
BBN	B1304250	BINDING SCREW M4X25(BLACK)
BBO	B1304300	BINDING SCREW BVM4X30 (BLACK)
BBP	B1303120	BINDING SCREW BVM3X12 (BLACK)
BBQ	B1300100	BINDING SCREW BVM2.3X10 (BLACK)
BBR	B1303080	BINDING SCREW BVM3X8 (BLACK)
BBU	B1303140	BINDING SCREW BVM3X14 (BLACK)
BCF	B1104080	BINDING SCREW VM4X8 (CR)
BEA	B1603050	BINDING SCREW M3X5 (BRASS,NI)
BHA	B3023060	BINDING TAP TITE S SCREW M3X6
BHB	B3023080	BINDING TAP TIGHT SCREW M3X8
BHC	B3024060	BINDING TAP-TIGHT SCREW M4X6
BHD	B3024080	BINDING TAP-TIGHT SCREW M4X8
BHG	B3023100	BINDING TAP TIGHT SCREW M3X10

REF.	ITEM #	DESCRIPTION
BHK	B3023140	BINDING TAP TIGHT SCREW M3X14
BHN	B8013080	BINDING TAP-TIGHT SCREW M3X08
BHP	B8314120	BINDING TAP-TITE P BRONZE SCREW M4X12
BHU	B8013120	BINDING TAP-TITE P SCREW M3X12
BHV	B3313060	+BINDING TAP-TIGHT P BRONZE SCREW M3X06
BUH	B8003060	BINDING TAP-TIGHT P SCREW M3X06
BVF	B1623120	+BINDING SCREW WITH SW,M3X12(BRASS,NI)
BVH	B1300030	BINDING SCREW BVM 2.6X03(BLACK)
BVV	B1324080	BINDING SCREW WITH SW (BLACK) M4X8
BVY	B1323080	BINDING SCREW WITH SW(BLACK)M3X8
BVZ	B1323120	BINDING SCREW WITH SW(BLACK)M3X12
CAE	B2003100	COUNTER-SUNK HEAD SCREW FHM3X10
E03	D1000300	STOP RING (E-3)
E04	D1000400	STOP RING (E-4)
E05	D1000500	STOP RING (E-5)
E07	D1000700	STOP RING (E-7)
E08	D1000800	STOP RING E-8
EAE	B3054100	TAPPING SCREW M4X10 (A TYP)
EAX	B3062060	TAPPING SCREW M2X6(B-TYP)
FBF	B3073100	COUNTER-SUNK HEAD TAPPING SCREW M3X10 (A TYP)
GEF	B9604060	GROUNDING SCREW M4X6 (BRASS,N;)
HAD	B4003050	TRIPLE SCREW M3X05
HAG	B4000080	TRIPLE SCREW M3X8
HAH	B4003080	TRIPLE TAPPING SCREW M3X8 B-TYP.
HAO	B4043080	TRIPLE TAP-TITE P SCREW M3X08
HAT	B4144080	+TP TAP-TITE P SCREW(CHROMIUM)
HAU	B4043080	TRIPLE TAP-TITE P SCREW M3X08
HAV	B4044080	+TP TAP TIGHT P CHROMATE M4X08
HAY	B4053060	TRIPLE TAP-TITE S SCREW M3X06
HBA	B4303050	TRIPLE SCREW M3X5 (BLACK)
HBD	B4304060	TRIPLE SCREW M4X6 (BLACK)
HBH	B4303060	TRIPLE SCREW M3X6 (BLACK)

REF.	ITEM #	DESCRIPTION
HCA	B4104060	TRIPLE SCREW M4X6(CHROMIUM)
HCB	B4103050	TRIPLE SCREW M3X05 (CHROMIUM)
HCD	B4103080	TRIPLE SCREW M3X08(CHROMIUM)
HCF	B4104080	TRIPLE SCREW M4X08(CHROMIUM)
HCG	B4104120	TRIPLE SCREW M4X12(CHROMIUM)
HCH	B4104160	TRIPLE SCREW M4X16(CHROMIUM)
HCL	B4103060	TRIPLE SCREW M3X06(CHROMIUM)
HDA	B4343060	TRIPLE TAP-TITE P SCREW M3X06(BLACK)
HDB	B4343080	TRIPLE TAP-TITE P SCREW M3X08(BLACK)
HDE	B4143080	+TP TRIPLE TAP-TITE P SCREW M3X08(CR)
HDJ	B4043120	TRIPLE TAP-TITE P SCREW M3X12
HDK	B4144100	+TP TAP-TITE P SCREW M4X10(CHROMIUM)
KAK	E0020080	SPRING PIN 2X8
KAL	E0020100	SPRING PIN 2X10
KAM	E0020120	SPRING PIN 2X12
KAN	E0020140	SPRING PIN 2X14
KFB	E5120120	SPRING PIN H7A 2X12 SUS
KFP	E5120180	PARALLEL PIN H7A 2X18 SUS
KFQ	E5120200	SPRING PIN H7A 2X20 SUS
KKA	E0030220	SPRING PIN 3X22
KKJ	E0025250	SPRING PIN 2.5X25
NAD	C1004000	NUT NM4
NAK	C1014000	NUT NSM4
RDD	D4000400	STOP RING CSTW-4
RDE	D4000500	STOP RING CSTW-5
TGB	C4204000	CROWN WASHER TWM4
WAB	C2003080	PLAIN WASHER PWM3
WBA	C2303080	PLAIN WASHER BPWM3 (BLACK)
WPG	C2808200	POLYESTER SLIDER WASHER 8X20X0.5T
XBC	C2893950	SHIM 6.2-0.25T
XBF	C2895120	SHIM 8.2-0.25T
XDG	C2895140	SHIM 8.2X0.8T

KYOCERA MITA EUROPE B.V.
Hoeksteen 40, 2132 MS Hoofddorp,
The Netherlands
Phone: (020) 6540000
Home page: http://www.kyoceramita-europe.com
Email: info@kyoceramita-europe.com

KYOCERA MITA NEDERLAND B.V.
Hoeksteen 40, 2132 MS Hoofddorp,
The Netherlands
Phone: (020) 5877200

KYOCERA MITA (UK) LIMITED
8 Beacontree Plaza
Gillette Way,
Reading RG2 0BS UK
Phone: (0118) 931 1500

KYOCERA MITA ITALIA S.P.A.
Via Verdi 89/91 20063 Cernusco sul Naviglio
(Milano) Italy
Phone: 02-92179 1

S.A. KYOCERA MITA BELGIUM N.V.
Hermesstraat 8A, 1930 Zaventem, Belgium
Phone: (02) 7209270

KYOCERA MITA FRANCE S.A.
Parc les Algorithmes
SAINT AUBIN
91194 GIF-SUR-YVETTE
France
Phone: (01) 69852600

KYOCERA MITA ESPAÑA S.A.
Edificio Mita, Avda. De Manacor Nº2,
Urb. Parque Rozas, Apartado de Correos 76,
28230 Las Rozas, Madrid, Spain
Phone: (91) 631-8392

KYOCERA MITA FINLAND OY
Kirvesmiehenkatu 4, 00810 Helsinki,
Finland
Phone: (09) 478-05200

KYOCERA MITA (SCHWEIZ) AG
Hölzliwisen, Industriestrasse 28,
8604 Volketswil, Switzerland
Phone: (01) 908 4949

KYOCERA MITA DEUTSCHLAND GMBH
Mollsfeld 12 40670 Meerbusch,
Germany
Phone: 02159-918120

KYOCERA MITA GMBH AUSTRIA
Eduard-Kittenberger-Gasse 95,
1230, Wien, Austria
Phone: (01) 86338-0

KYOCERA MITA SVENSKA AB
Siktgatan 2,
162 50 Vällingby, Sweden
Phone: (08) 4719999

KYOCERA MITA DANMARK A/S
Industrivej 11, DK-4632 Bjæverskov,
Denmark
Phone: 56871100

KYOCERA MITA PORTUGAL LDA.
CASCAISTOCK-Armazem nº8,
Rua das Fisgas, Alcoitão,
2765 Estoril, Portugal
Phone: (21) 4602221

KYOCERA MITA SOUTH AFRICA (PTY) LTD.
UNIT 3, "Kyalami Crescent,"
Kyalami Business Park,
1685 Midrand, South Africa
Phone: (11) 466-3290

KYOCERA MITA AMERICA, INC.
Headquarters:
225 Sand Road, P.O. Box 40008,
Fairfield, New Jersey 07004-0008,
U.S.A.
Phone: (973) 808-8444

KYOCERA MITA AUSTRALIA PTY. LTD.
Level 3, 6-10 Talavera Road, North Ryde,
N.S.W. 2113 Australia
Phone: (02) 9888-9999

KYOCERA MITA NEW ZEALAND LTD.
1-3 Parkhead Place,
Albany, Auckland,
New Zealand
Phone: (09) 415-4517

KYOCERA MITA (THAILAND) CORP., LTD.
9/209 Ratchada-Prachachem Road,
Bang Sue, Bangkok 10800, Thailand
Phone: (02) 586-0320

KYOCERA MITA SINGAPORE PTE LTD.
121 Genting Lane, 3rd Level,
Singapore 349572
Phone: (65) 7418733

KYOCERA MITA HONG KONG LIMITED
11/F., Mita Centre,
552-566, Castle Peak Road,
Tsuen Wan, New Territories,
Hong Kong
Phone: (852) 24297422

KYOCERA MITA CORPORATION
2-28, 1-chome, Tamatsukuri, Chuo-ku
Osaka 540-8585, Japan
Phone: (06) 6764-3555

© 2001 KYOCERA MITA CORPORATION

KYOCERA is a trademark of Kyocera Corporation

mita is a registered trademark of KYOCERA MITA CORPORATION

Printed in Holland