KYOCERA mita

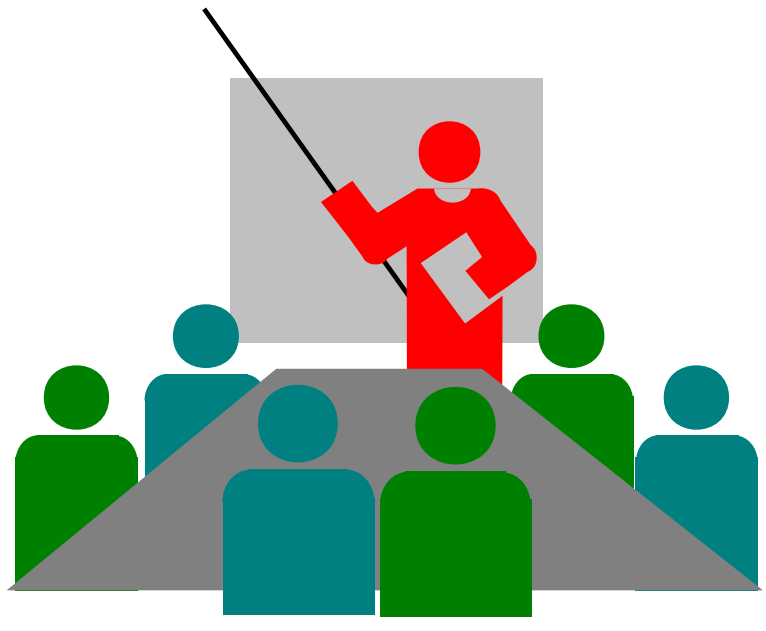

Visual

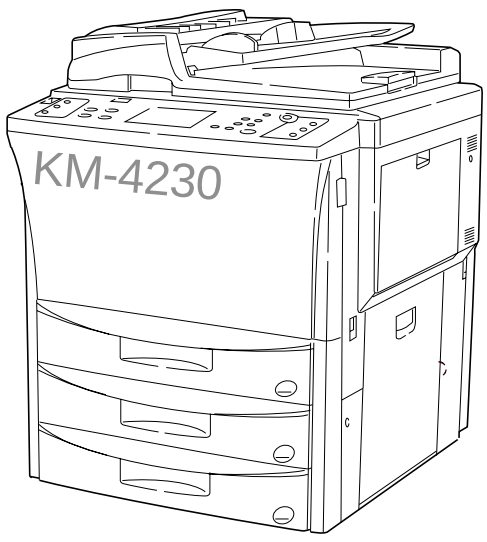

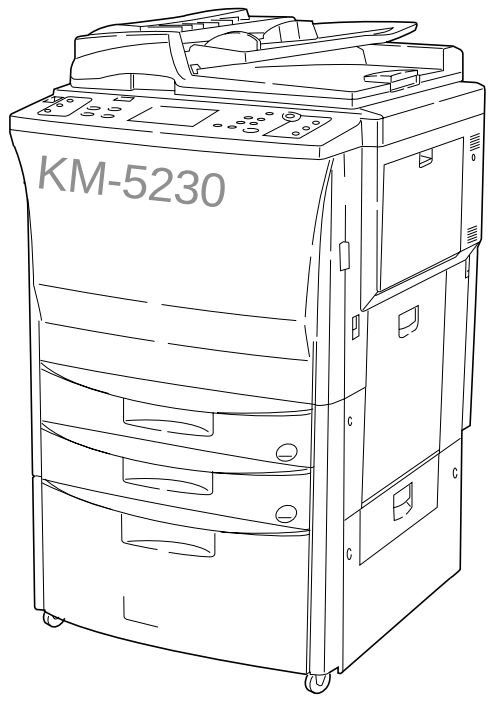

KM-4230/5230

© KME Training dept

Specifications

KM4230/5230-1

Original size	Maximum: A3
Copying sizes	Maximum: A3
	Minimum: A5 (A6R bypass)
Drawers	2 x 550 sheets (64 – 80 g/m^2)
Bypass table	100 sheets (60 – 160 g/m^2)
	Special paper: tracing paper, transparencies and envelopes
Magnification ratios	Scanning: 25 – 400%
	With DF: 25 – 200%
Copy speeds (100% memory copy)	A4: 42/52 copies/min.
	A4R: 32/35 copies/min.
	A3: 24/26 copies/min.
Maintenance interval	120K/150K copies
First copy time	4.5 sec
Warm-up time	120/180 s or less
In preheat/energy saver mode	30 s or less
Continuous copying	1 – 999 sheets
Photoconductor	OPC 60 mm (120K/150K)
Drum potential	+ 800V
Charging system	wire + grid 670~730µA
Exposure light sources	Fluorescent lamp/laser diode
Exposure scanning system	Scanner and CCD/ Polygon mirror
Resolution	600 X 600 dpi scan and print

Specifications

KM4230/5230-2

Developer	2-component (120K)
Developing bias	+ 600V
Toner (recycling system)	Cartridge of 700g (22K for 6% A4)
Transfer system	Single corona -210µA
Separation	Single AC corona
Fixing system	Heat and press roller
Heat source	Halogen heaters (850W / 850W)
Control temperature	180/190°C
Cleaning system	Cleaning blade + brush
Bit map memory	12 MB / 2x12 MB
Page memory	32 MB / 2x32 MB (170/2x170 pages)
Grey scale	256 levels
• Duplex	Standard
Size	A5 ~ A3
Speed	10 sets of 5 duplex copies from single sided originals in 158 seconds
Type	stackless
Limitation	none
• Document feeder	SRDF-1
Size	A5 ~ A3
Originals	simplex 35 ~ 160 gr/m2 duplex 50 ~ 120 gr/m2
Number	70 sheets to A4 size 50 sheets to A3 size

- Large paper deck — KM 5230 standard
  - Size — A4
  - Capacity — 3000

- Options
  - Finisher — F-4130
    F-4220
  - Paper feed desk — MD-10 (KM 4230)
  - Large paper deck — ST-8 (KM 4230)
  - SIMM 16 MB for printing or copying
  - SIMM 32 MB for printing or copying
  - Keycounter
  - Up to 4 language ROMs (sets)
  - Printing system J
    - for printing via parallel cable
  - Network board NC110
    - for printing via network (RJ45)
  - Memory board MB3 (KM 4230 only)

Maintenance mode

- General
  - U 000 Outputting an own-status report
  - U 001 Exiting the maintenance mode
  - U 002 Setting the factory default data
  - U 003 Setting the service telephone number
  - U 004 Setting the machine number
  - U 005 Copying without paper
  - U 019 Displaying the ROM version
- Initialization
  - U 020 Initializing all data
  - U 021 Initializing memories
  - U 022 Initializing backup data
- Drive, Paperfeed, Paper conveying and Cooling system
  - U 030 Checking motor operation
  - U 031 Checking switches for paper conveying
  - U 032 Checking clutch operation
  - U 033 Checking solenoid operation
  - U 035 Setting folio size
  - U 036 Setting envelope size
- Optical
  - U 061 Turning the exposure lamp on
  - U 073 Checking scanner operation
  - U 089 Outputting a PG pattern
  - U 091 Checking shading operation
  - U 099 Checking and setting the original size detection sensor

This is not a complete list

- High voltage

  U 102 Setting the cleaning interval for the transfer charger

- Developing

  U 130 Initial setting for the developer
  U 131 Setting the toner sensor control voltage
  U 132 Replenishing toner forcibly
  U 133 Collecting the recycled toner
  U 135 Checking toner motor operation
  U 136 Turning the toner level detection function on/off
  U 137 Checking the toner level detection sensor
  U 155 Displaying the toner sensor output
  U 156 Changing the toner control level
  U 157 Checking/clearing the developing drive time
  U 158 Checking/clearing the developing count

- Fixing and cleaning

  U 162 Stabilizing fixing forcibly
  U 196 Turning the fixing heater on
  U 198 Setting the fixing phase control

- Operation panel and support equipment

  U 200 Turning all LEDs on
  U 201 Initializing the touch panel
  U 202 Setting the MMD host monitoring system
  U 203 Operating DF separately
  U 204 Setting the presence or absence of a key card or key counter
  U 206 Setting the presence or absence of the coin vender

This is not a complete list

- Operation panel and support equipment (cont.)

U 209 Setting date and time

U 243 Checking operation of DF motors, clutches and solenoids

U 244 Checking DF switches

U 245 Checking display messages

U 247 Checking operation of LPD and Paper Feed Desk

U 248 Setting the paper eject device

- Adjustment of amount of slack in paper in punch mode
- Punch limit = 75000
- Punch-hole scrap count
- Booklet stitcher stapling position adjustment

- Mode setting

U 250 Setting the maintenance cycle

U 251 Checking/clearing the maintenance count

U 252 Setting the destination

U 265 Setting OEM purchaser code

U 345 Setting value for maintenance due indication

- Others

U 901 Checking/clearing copy counts by paper feed locations

U 904 Checking/clearing service call counts

U 905 Checking/clearing counts by optional devices

U 906 Resetting partial operation control

U 907 Checking and resetting count value on each ejection location

U 908 Checking count value of electronic counter

U 990 Checking/clearing time for exposure lamp to light

U 992 Checking/clearing printer count

This is not a complete list

- Cross view

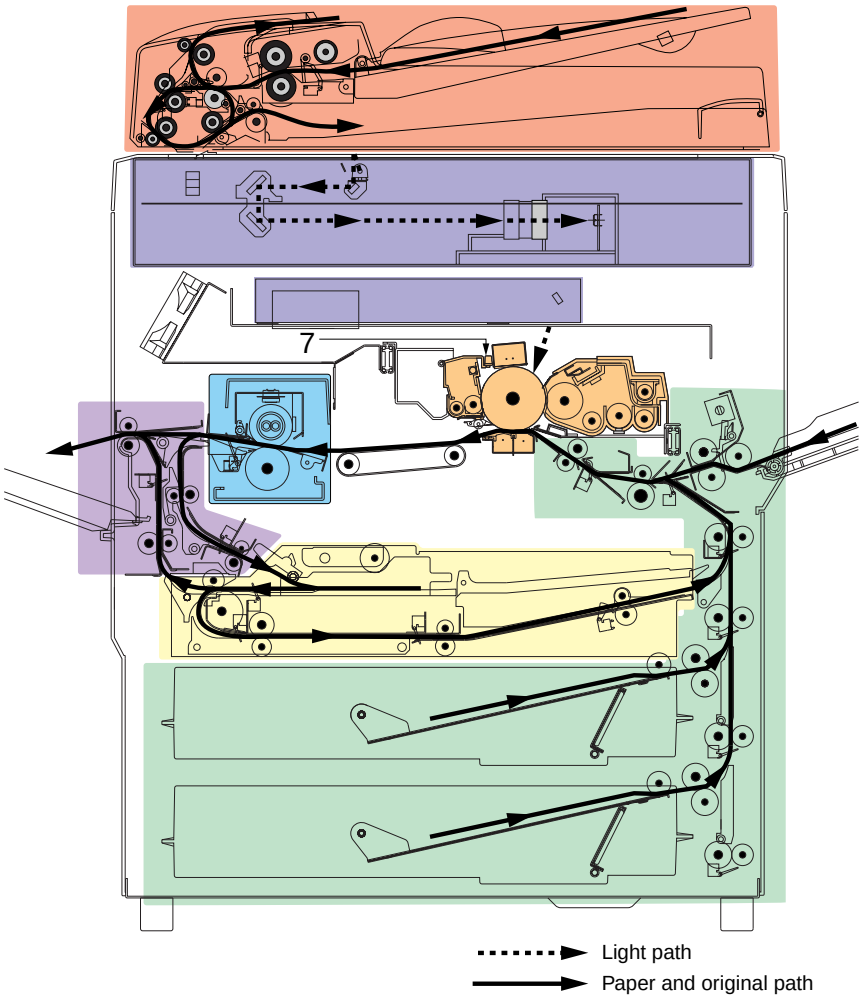

- Large paper deck

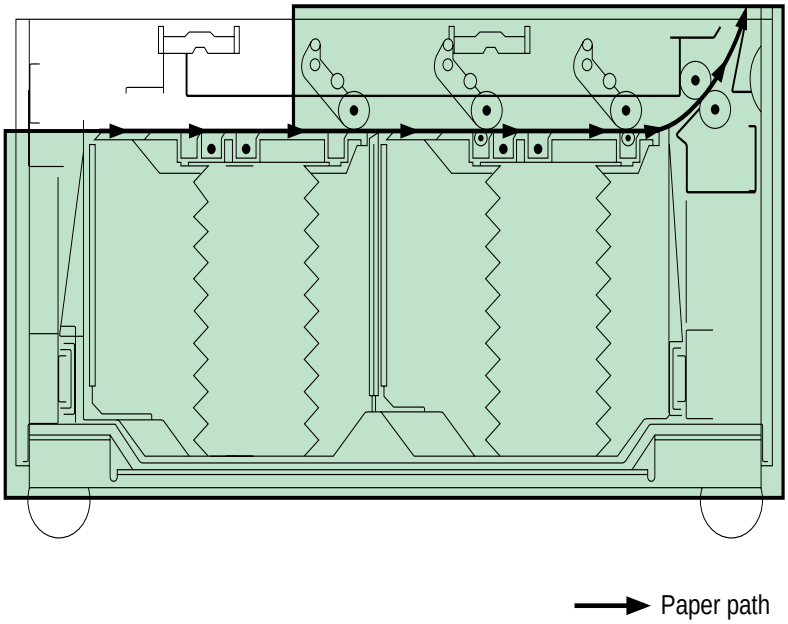

- Cross view

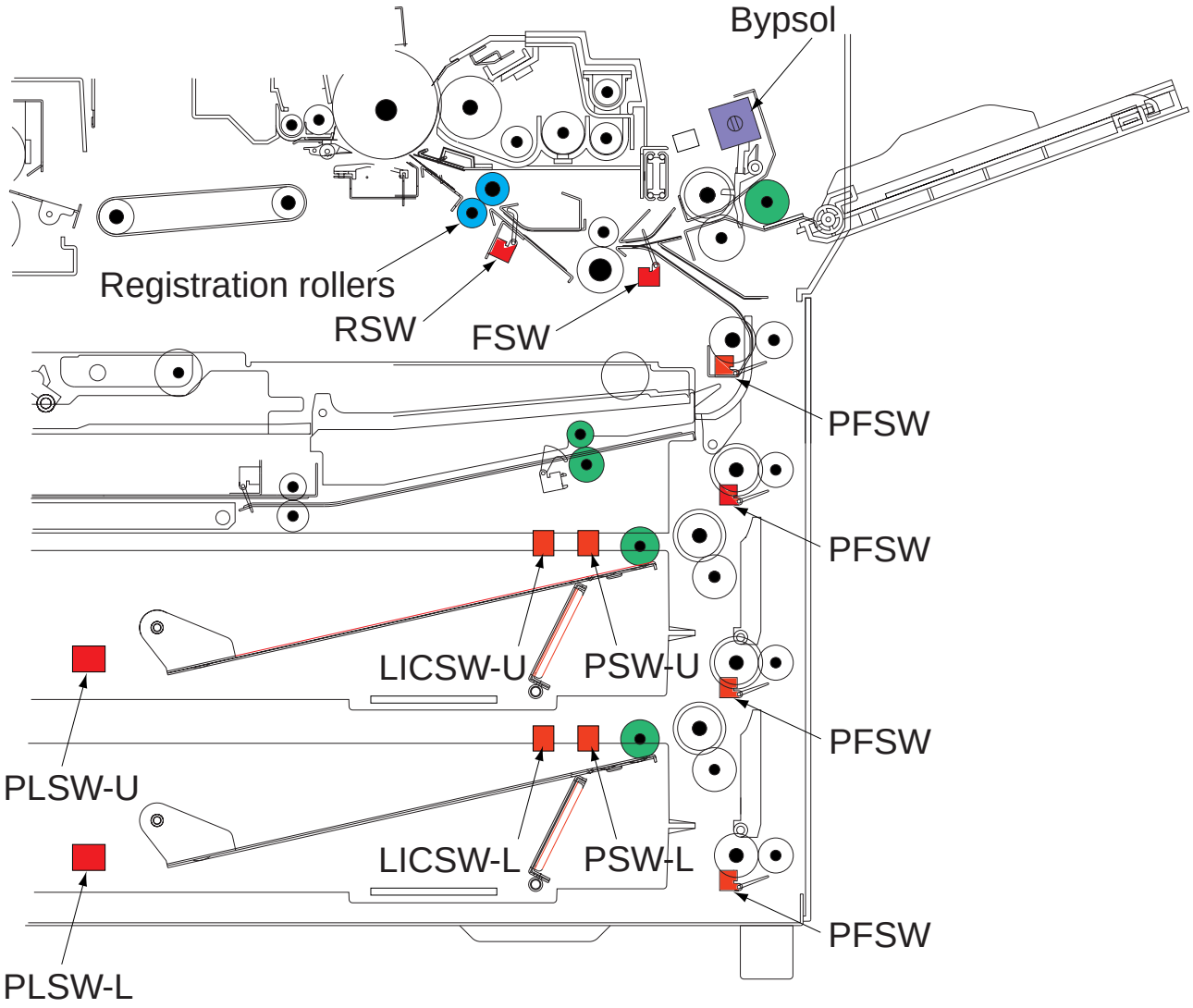
Bypsol
Registration rollers
RSW
FSW
PFSW
PFSW
LICSW-U
PSW-U
PFSW
PLSW-U
LICSW-L
PSW-L
PFSW
PLSW-L

- Crossview

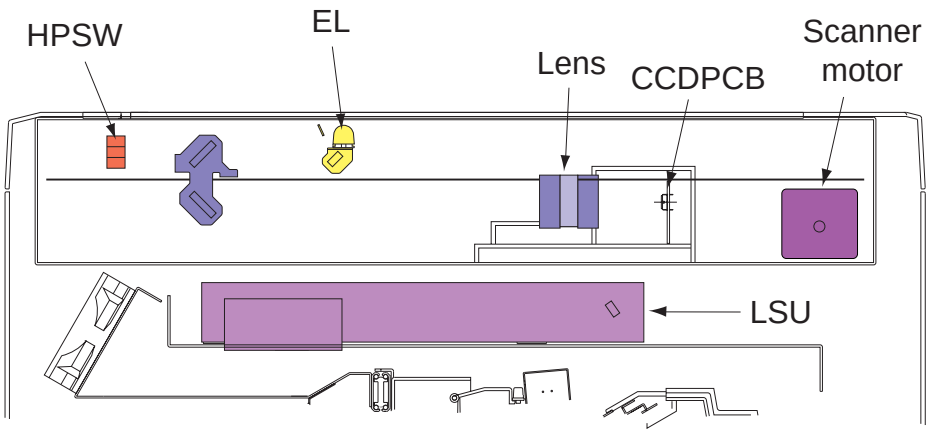

- Block diagram

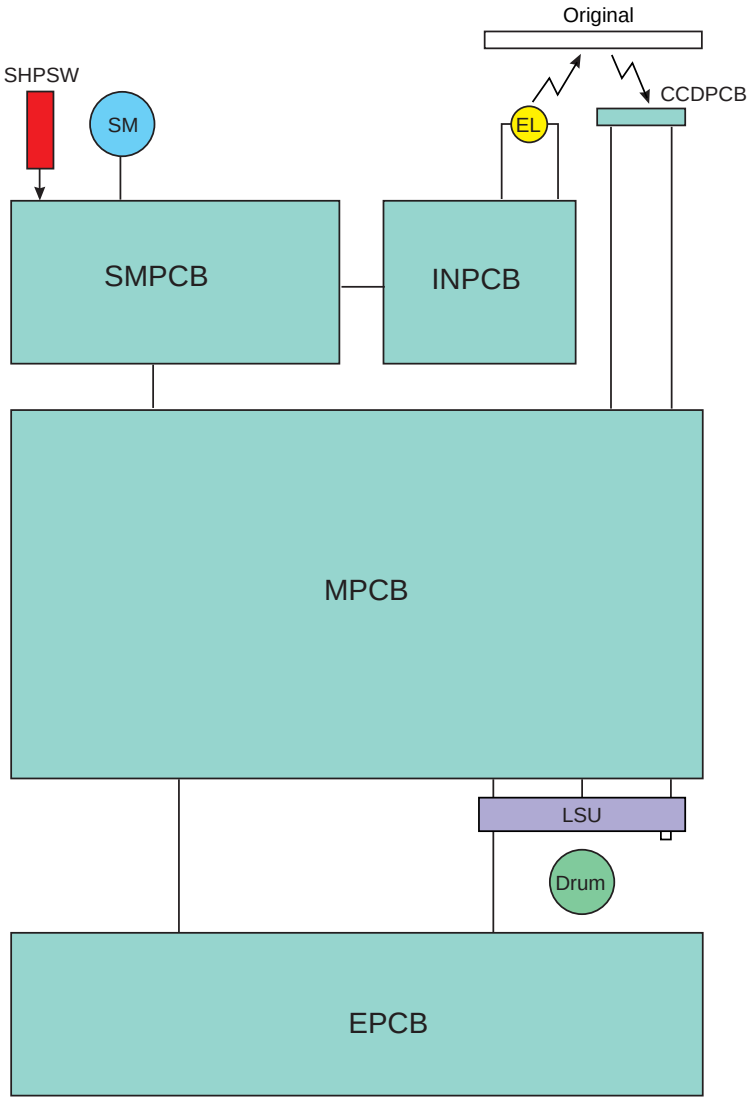

- Laser unit

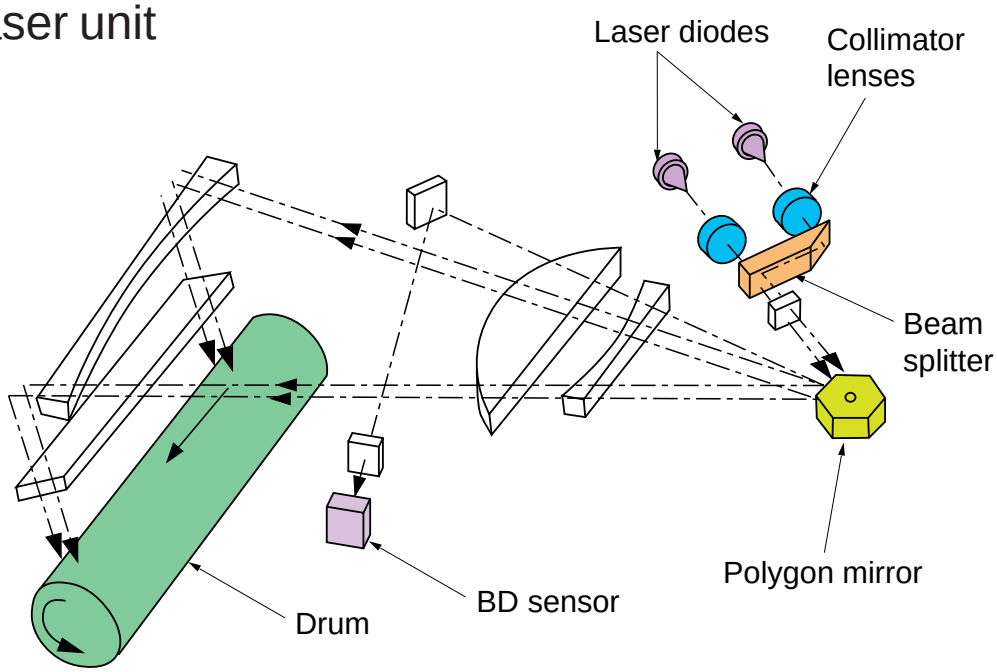

- Refitting the scanner wires
  - Attach the scanners with the special tool p/n 2AC68230
  - Refit the wires according to the illustrations below:

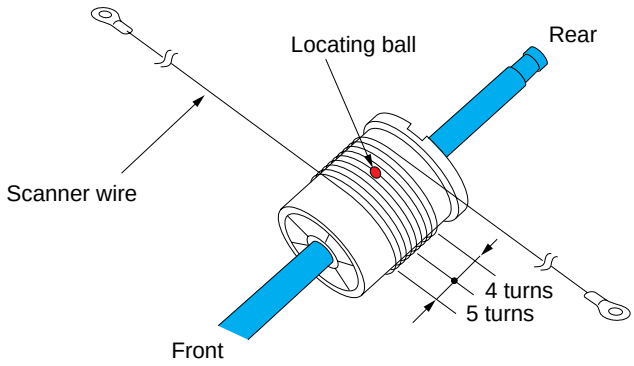

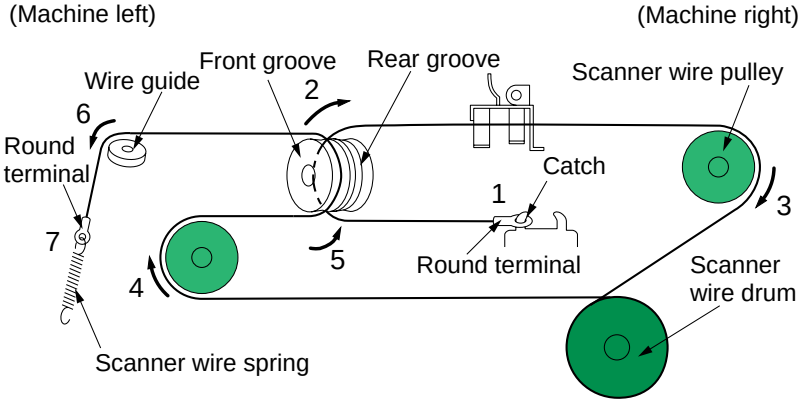

- Image dimension adjustments 1: *Image Shape*

  - Lateral squareness printing adjustment

    Adjust the position of the laser printhead on the front side

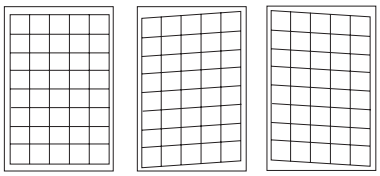

Correct Example 1 Example 2

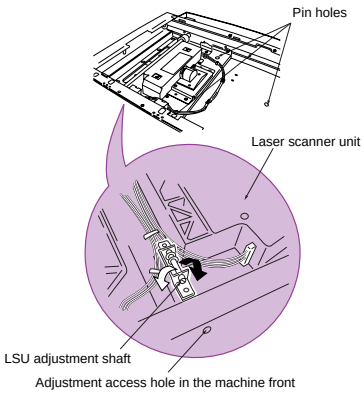

  - Lateral squareness scanning adjustment

    Adjust the hight of the ISU (CCD unit) on the front side.

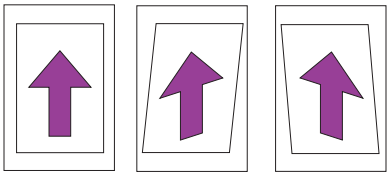

Original Output example 1 Output example 2

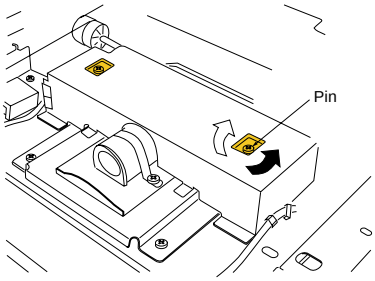

  - Lateral squareness SRDF scanning adjustment

    Adjust the position of the SRDF.

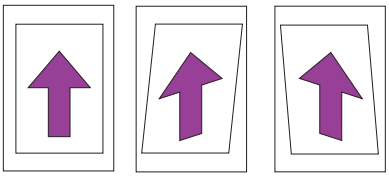

Original Output example 1 Output example 2

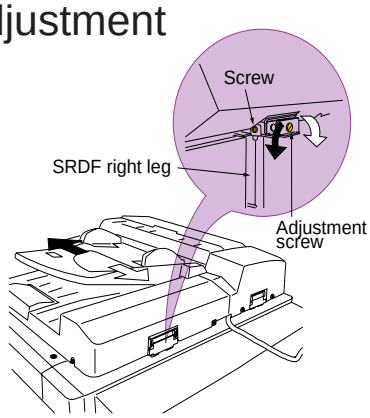

  - Longitudinal squareness (Scan) adjustment

    Adjust the mirror 2 frame position in a horizontal plane

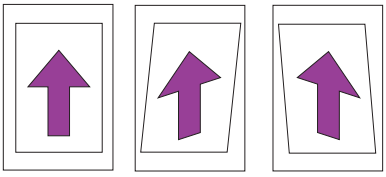

Original Output example 1 Output example 2

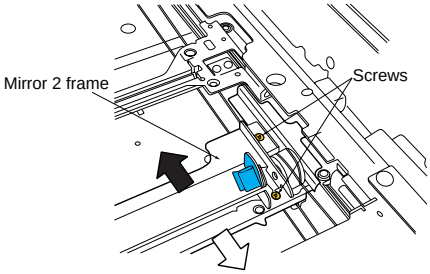

- Cross view

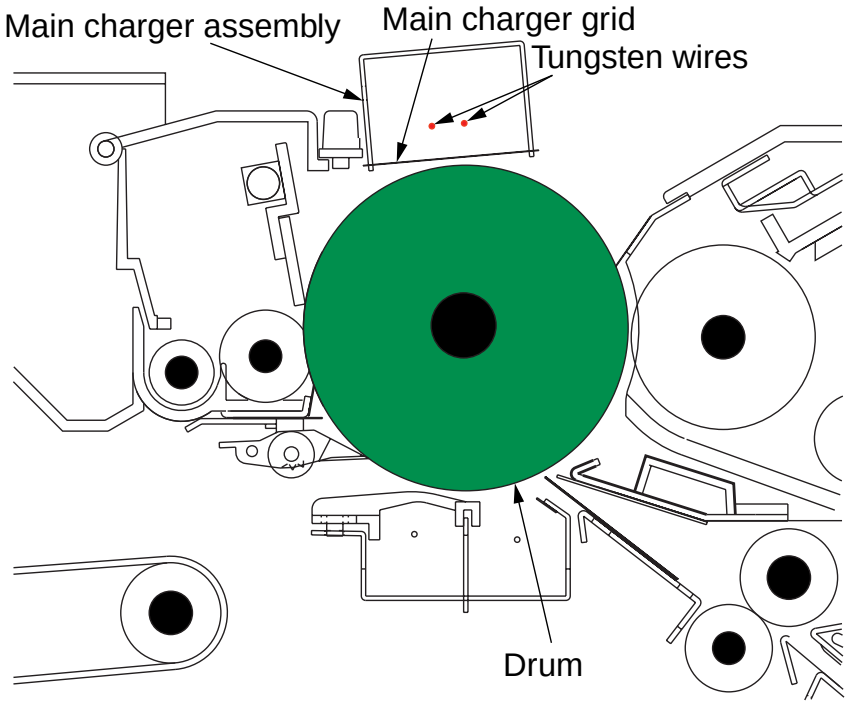

- Block Diagram

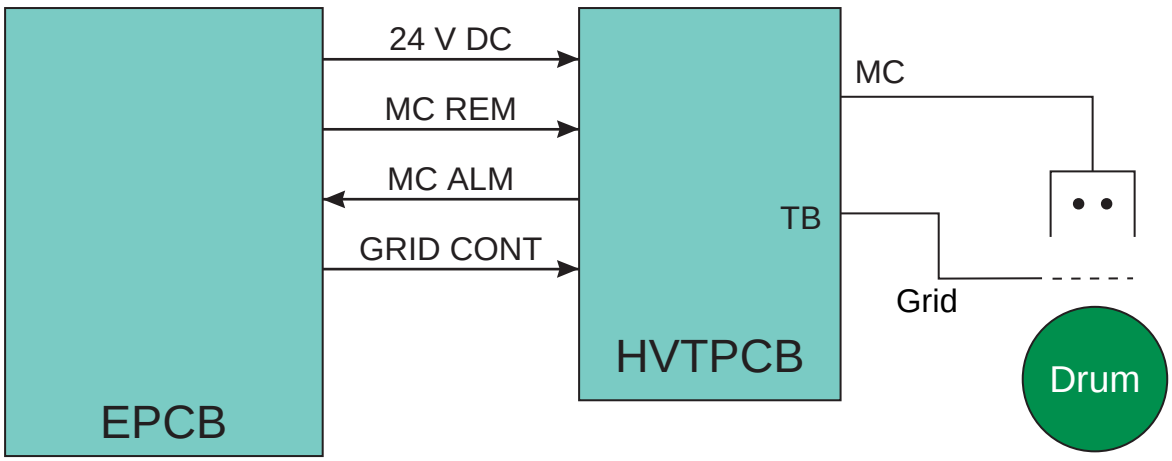

- Cross view

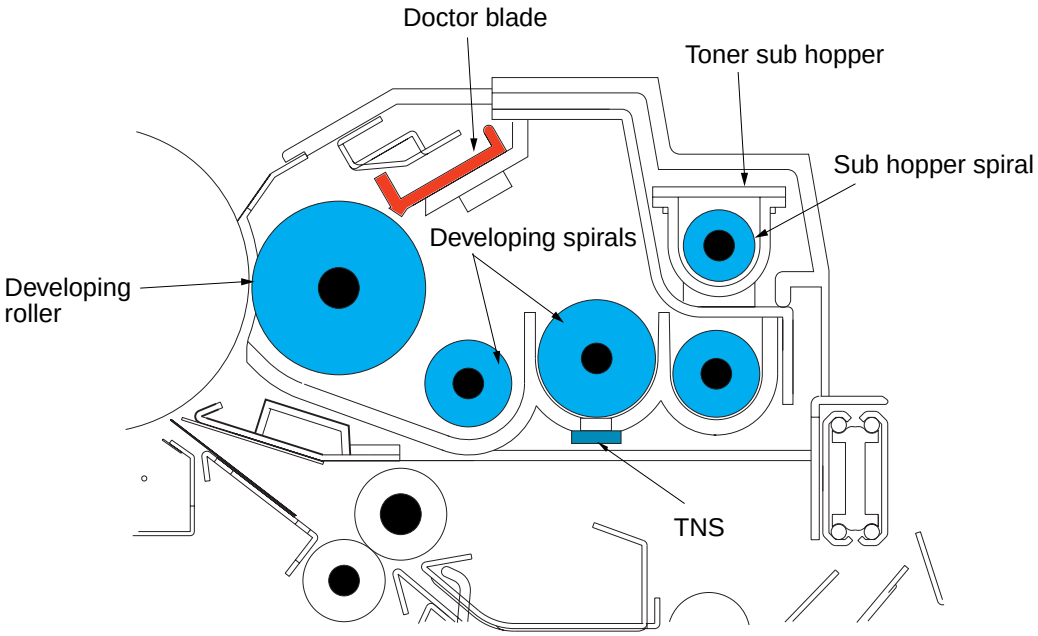

- Block diagram

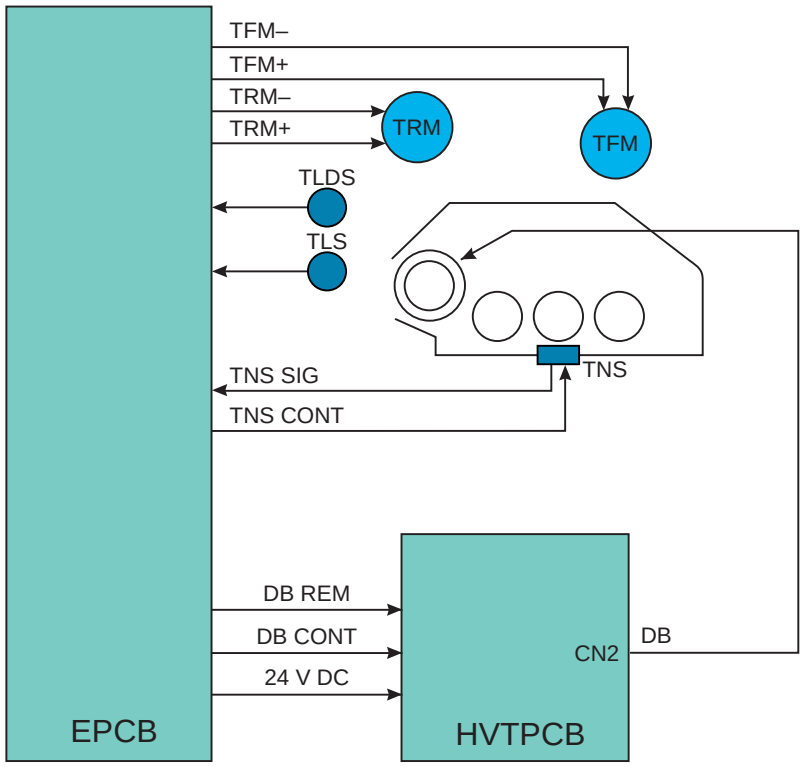

- Crossview

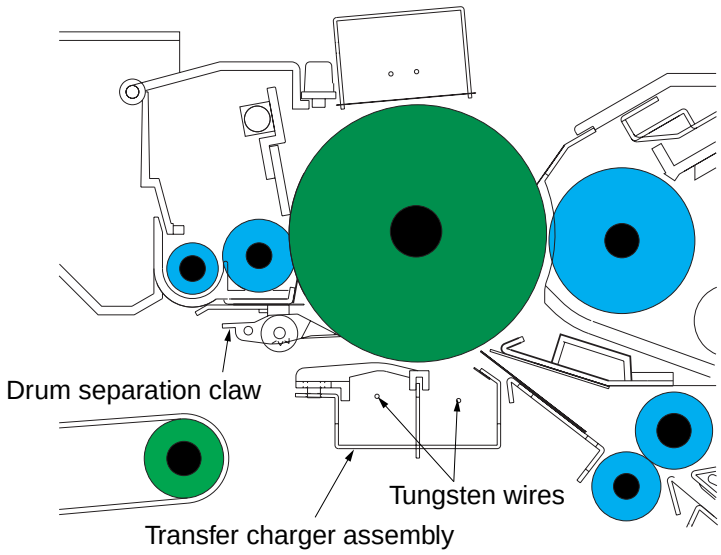

- Block diagram

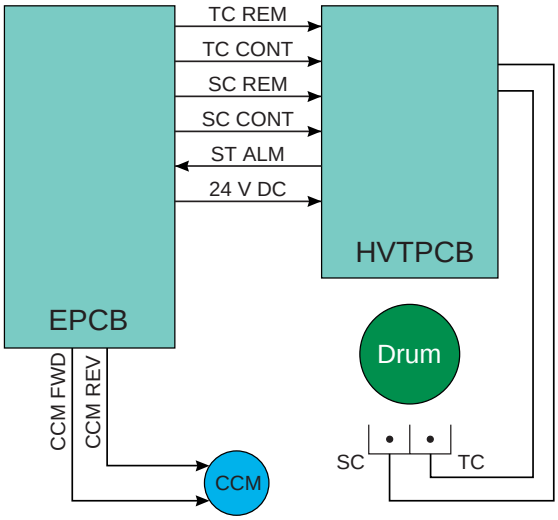

- Charger wire cleaning

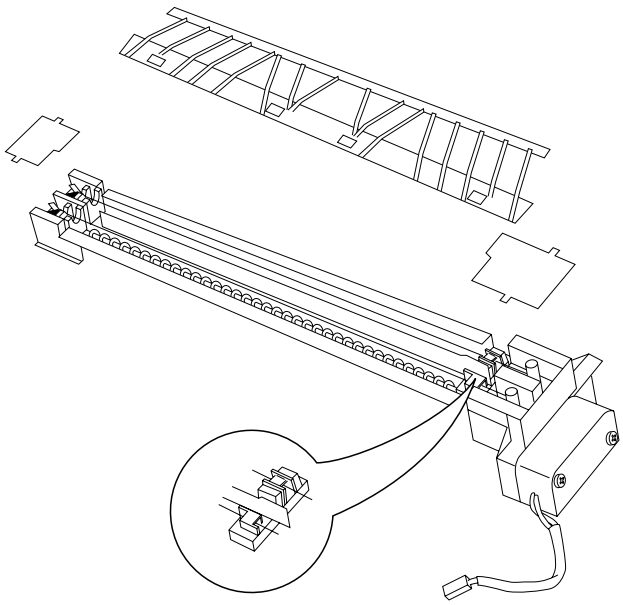

- Crossview

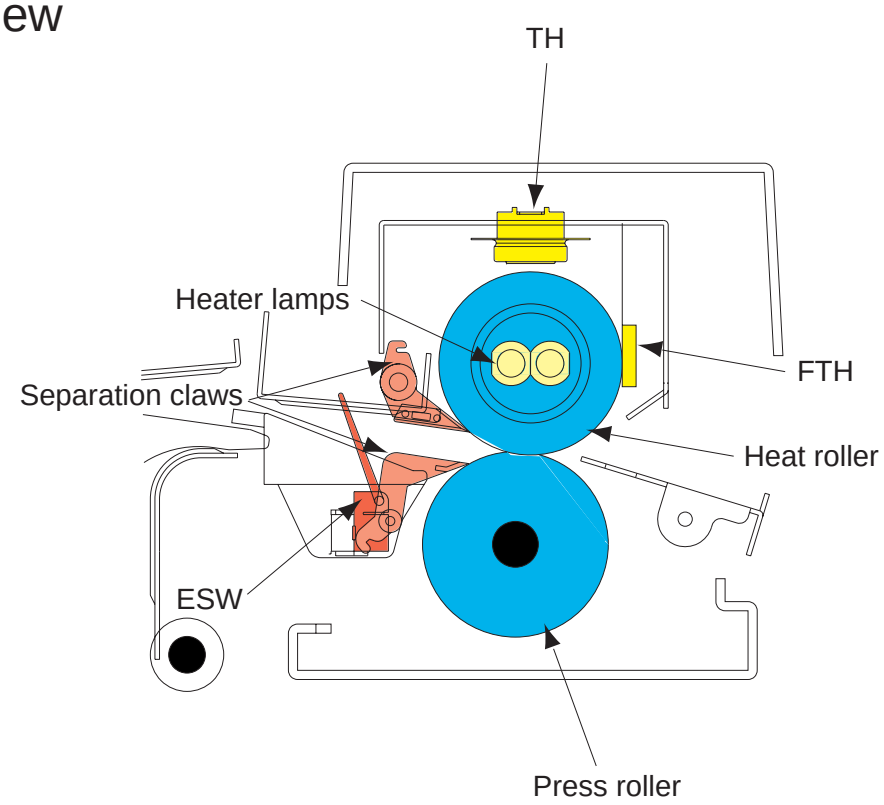

- Block diagram

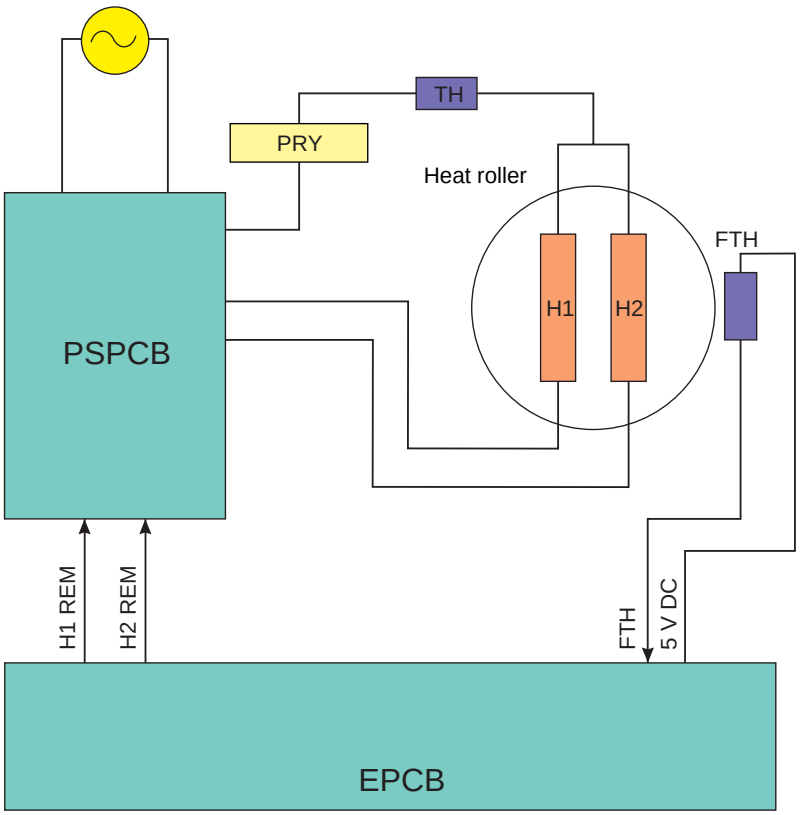

- Cross view

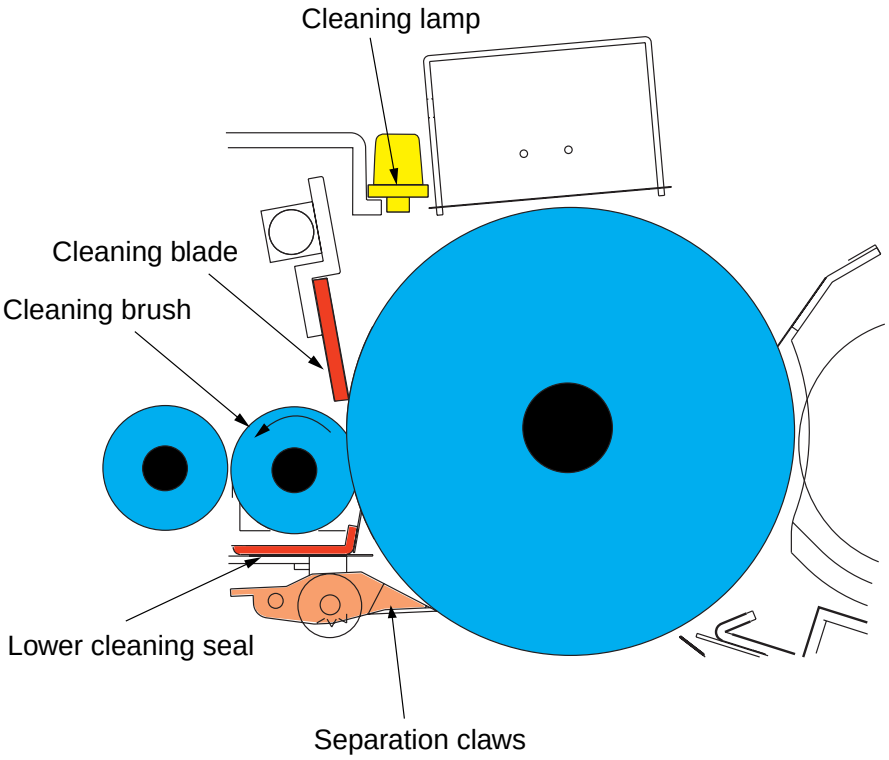

- Block diagram

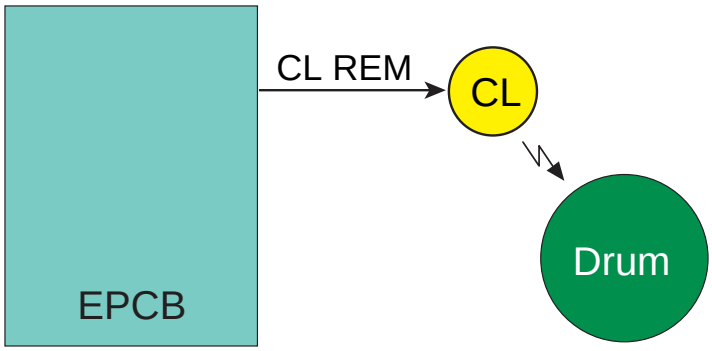

- Cross view

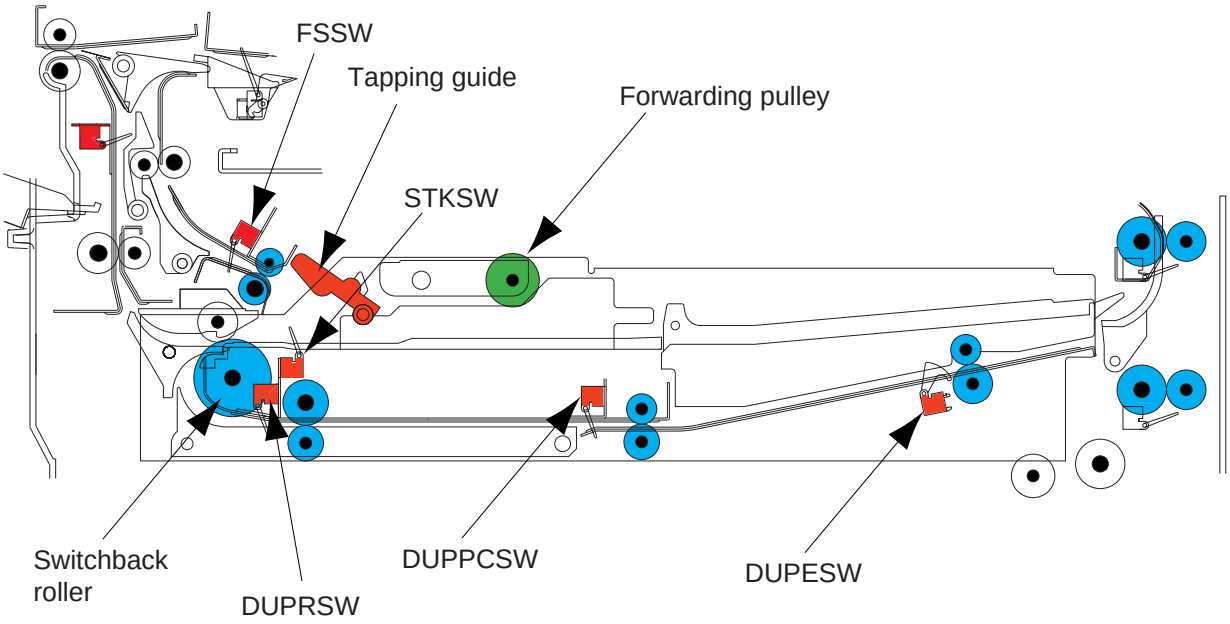

- Block diagram

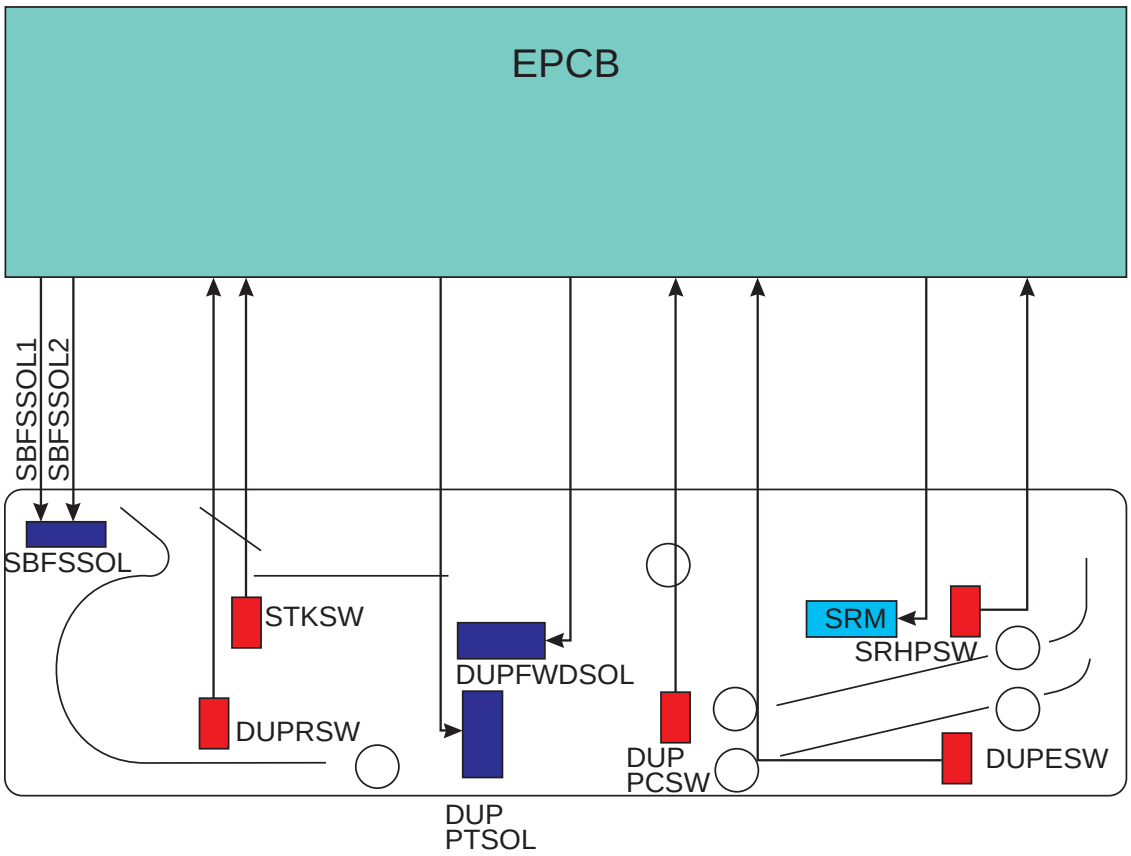

- Cross view

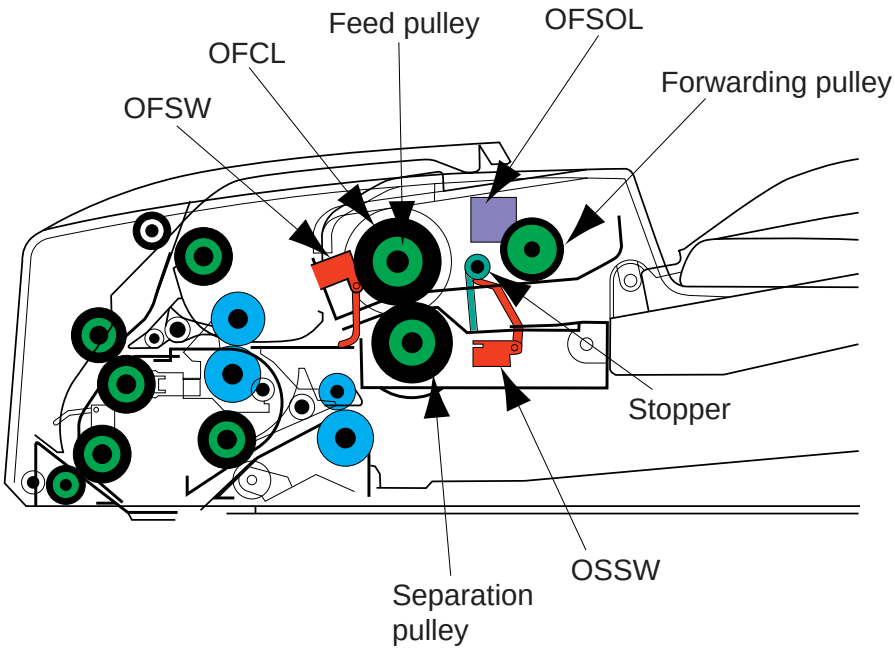

- Block diagram

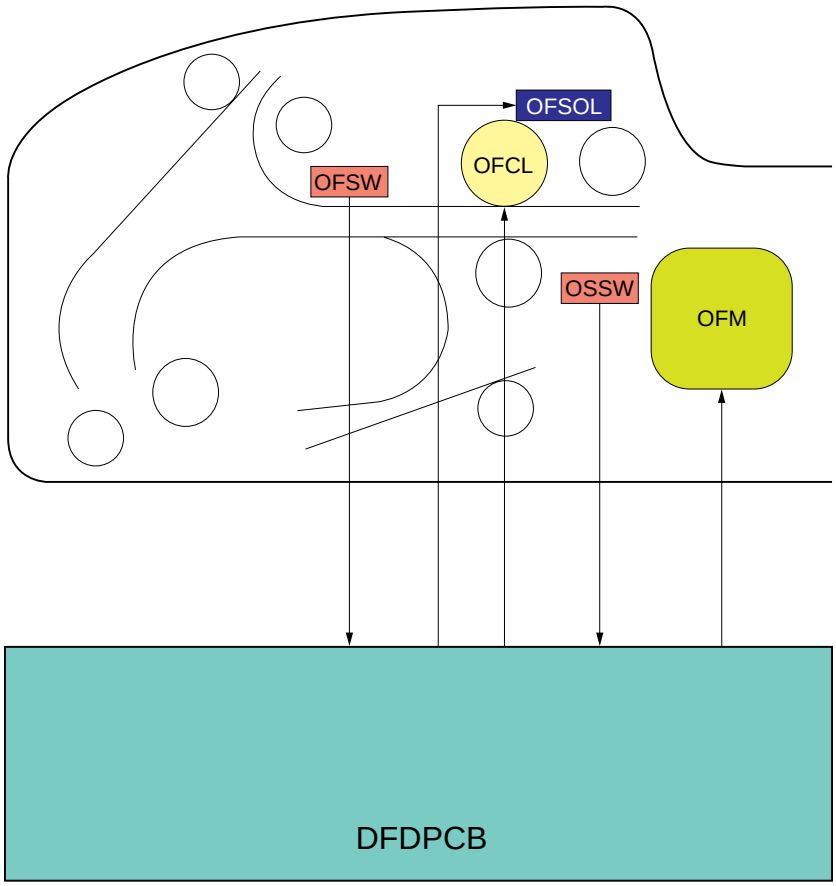

- C-Codes

C 001 Memory copy PCB 1 communication problem

C 003 Memory copy PCB 2 communication problem

C 010 RAM / ROM problem

C 011 Backup memory data problem

C 021 Operation unit main PCB communication problem

C 022 Communication problem between engine PCB and main PCB

C 023 Scanner communication problem

C 024 Printer board communication problem (optional)

C 026 Memory copy PCB 1 communication problem

C 032 Large Paper Deck communication problem (optional/standard)

C 032 Paper feed desk communication problem (42 ppm optional only)

C 034 Finisher communication problem (optional)

C 036 Memory copy PCB 2 communication problem (optional/standard)

C 037 Communication microcomputer problem

C 104 Optical system problem (incorrect CCD input voltage)

C 200 Drive motor problem

C 210 Paper conveying motor problem

C 220 Side registration motor problem

C 230 Paper feed motor problem

C 231 Desk drive motor problem (42 ppm optional only)

- C-Codes (cont.)

C 241 Upper lift motor problem

C 242 Lower lift motor problem

C 243 Upper desk lift motor problem (optional 42 ppm only)

C 244 Lower desk lift motor problem (optional 42 ppm only)

C 310 Scanner carriage problem

C 332 Scanner watchdog problem

C 340 Original detection position problem

C 400 Polygon motor synchronization problem

C 401 Polygon motor steady-state problem (after stabilization)

C 420 BD steady-state problem

C 510 Main charger problem

C 511 Transfer/separation high-voltage problem

C 610 Broken fixing unit thermistor wire

C 620 Abnormally low fixing temperature

C 630 Abnormally high fixing temperature

C 640 Zero-crossing signal problem

C 710 Toner sensor problem (< 0.5V or > 4.5V)

C 730 Broken external temperature thermistor wire

C 731 Short-circuited external temperature thermistor

C 740 Toner hopper problem

- C-Codes (cont.)

C 801 Finisher paper conveying motor problem (optional)

C 803 Finisher paper conveying belt problem (optional)

C 814 Finisher tray elevation motor problem (optional)

C 817 Finisher front jogger motor problem (optional)

C 818 Finisher rear jogger motor problem (optional)

C 821 Finisher front stapler problem (optional)

C 822 Finisher rear stapler problem (optional)

C 920 Paper deck conveying motor problem (optional)

C 921 Paper deck motor 1 problem (optional/standard)

C 922 Paper deck motor 2 problem (optional/standard)

C 923 Paper deck right lift position problem (optional/standard)

C 924 Paper deck left lift position problem (optional/standard)