KYOCERA mita

KM-4230
KM-5230

PARTS LIST

Published in Feb.'00
842A3120

KM-4230
KM-5230

Parts List

KM-4230
KM-5230

NOTE

1. Indicate parts number and machine model when placing an order.

eg.	Parts Number	Parts Name	Machine Model	Cycle	Quantity
	2A304010	FRONT COVER	KM-4230/5230	50/60Hz	1

2. Service calls and freight will be charged separately.

3. Symbols in the "Parts Number" column.

- Parts with "•" are component parts or sub-assemblies of the assembly appearing immediately above them.

eg.	Parts Number	Parts Name	Parts Number	Parts Name
	68200070	CASSETTE ASS'Y U(K M)	•J0463080	PULG, QR/P15-8S-C(HIROSE)
			•33905020	LABEL, CASSETTE OPERATION

- Parts with "••" are component parts or the sub-assembly with "•" appearing immediately above them.

eg.	Parts Number	Parts Name	Parts Number	Parts Name
	•2AC00430	TRANSFER CLEANING ASS'Y	••2AC17110	PAD A, SHIELD CLEANING
			••2AC17120	PAD B, SHIELD CLEANING

4. See the last page of this parts list for the classification of the screws in the illustrations.

CONTENTS

FIG.1 EXTERIOR COVERS (KM-5230) · · · · · · · · · · · · · · · · · · 2
FIG.1 EXTERIOR COVERS (KM-4230) · · · · · · · · · · · · · · · · · · 4
FIG.2 FRAMES · · · · · · · · · · · · · · · · · ·

FIG. 1 EXTERIOR COVERS (KM-5230) 2A4

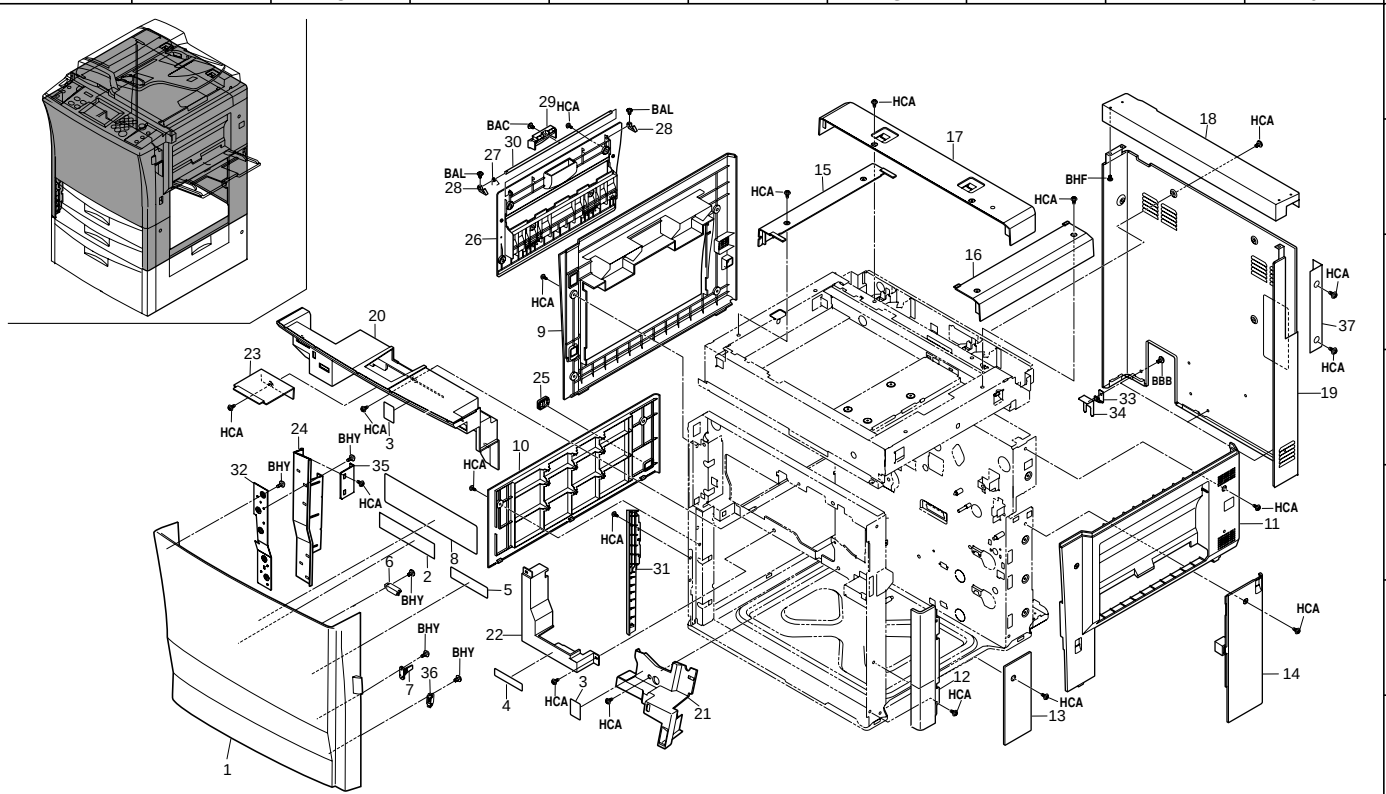

FIG. 1 EXTERIOR COVERS (KM-5230)

SP	Ref. No.	Part. No.	Description	Quantity		
				230V	240V	120V
◉	1	2A404010	FRONT COVER	1	1	1
	2	2AC05100	LABEL,JAM RELEASE	1	1	1
	3	2AG05200	LABEL,HIGH VOLTAGE CAUTION(EXP)	2	2	2
	4	2AC05150	LABEL,DRUM CAUTION(EUR)	1	1	0
	4	2AC05140	LABEL,DRUM CAUTION(EXP)	0	0	1
	5	2AC05130	LABEL,SUPPLY(EUR)	1	0	0
	5	73905200	LABEL,SUPPLY(E,F,G,S)	0	1	0
	5	73905191	LABEL,SUPPLY(E,F,S)	0	0	1
	6	60804120	MAGNET CATCH	1	1	1
	7	65004171	HOLDER,SAFETY SWITCH	1	1	1
◉	8	2A405010	LABEL,MACHINE OPERATION	1	1	1
◉	9	2A304020	INNER LEFT COVER	1	1	1
◉	10	2A304030	LOWER LEFT COVER	1	1	1
◉	11	2A304040	INNER RIGHT COVER	1	1	1
◉	12	2A404020	LOWER FRONT RIGHT COVER	1	1	1
◉	13	2A304060	LOWER FRONT RIGHT COVER B	1	1	1
◉	14	2A304070	LOWER REAR RIGHT COVER	1	1	1
◉	15	2A304080	UPPER LEFT COVER	1	1	1
◉	16	2A304090	UPPER RIGHT COVER	1	1	1
◉	17	2A304100	UPPER REAR COVER A	1	1	1
◉	18	2A304110	UPPER REAR COVER B	1	1	1
◉	19	2A304120	LOWER REAR COVER	1	1	1
	20	2AC04150	INNER COVER	1	1	1
	21	2AD04050	RIGHT INNER COVER	1	1	1
	22	2AC04170	LEFT INNER COVER	1	1	1
	23	2AC04190	LID,OPERATION UNIT ROM	1	1	1
	24	2AD04070	FRONT HINGE,COVER	1	1	1
◉	25	2A304160	COVER,HEATER SWITCH	1	1	1
◉	26	2A304130	COVER,EJECT	1	1	1
◉	27	33906640	RIGHT SPRING,FEED RELEASE	1	1	1
	28	33906670	RIGHT HOOK,FEED RELEASE	2	2	2
◉	29	68204180	RIGHT HANDLE,FEED RELEASE(K M)	1	1	1
	30	33906690	RIGHT SHAFT,FEED RELEASE	1	1	1
	31	2A404030	LOWER FRONT LEFT COVER	1	1	1
	32	2AD04080	MOUNT,HINGE	1	1	1
	33	18518200	GROUND PLATE,CLEANING BRUSH	3	3	3
	34	2AC26320	HOLDER,GROUND	3	3	3
	35	2AD04130	FRONT POSITIONING PLATE,COVER	1	1	1
	36	71804400	MAGNET CATCHER	1	1	1
	37	2A304240	LID,CONTROLLER	1	1	1

• Parts with "•" are component parts or sub-assemblies of the assembly appearing immediately above them.
• Parts with "◉" indicates the Service parts.

• Parts with "• •" are component parts or sub-assembly with "•" appearing immediately above them.

FIG. 1 EXTERIOR COVERS (KM-4230) 2A3

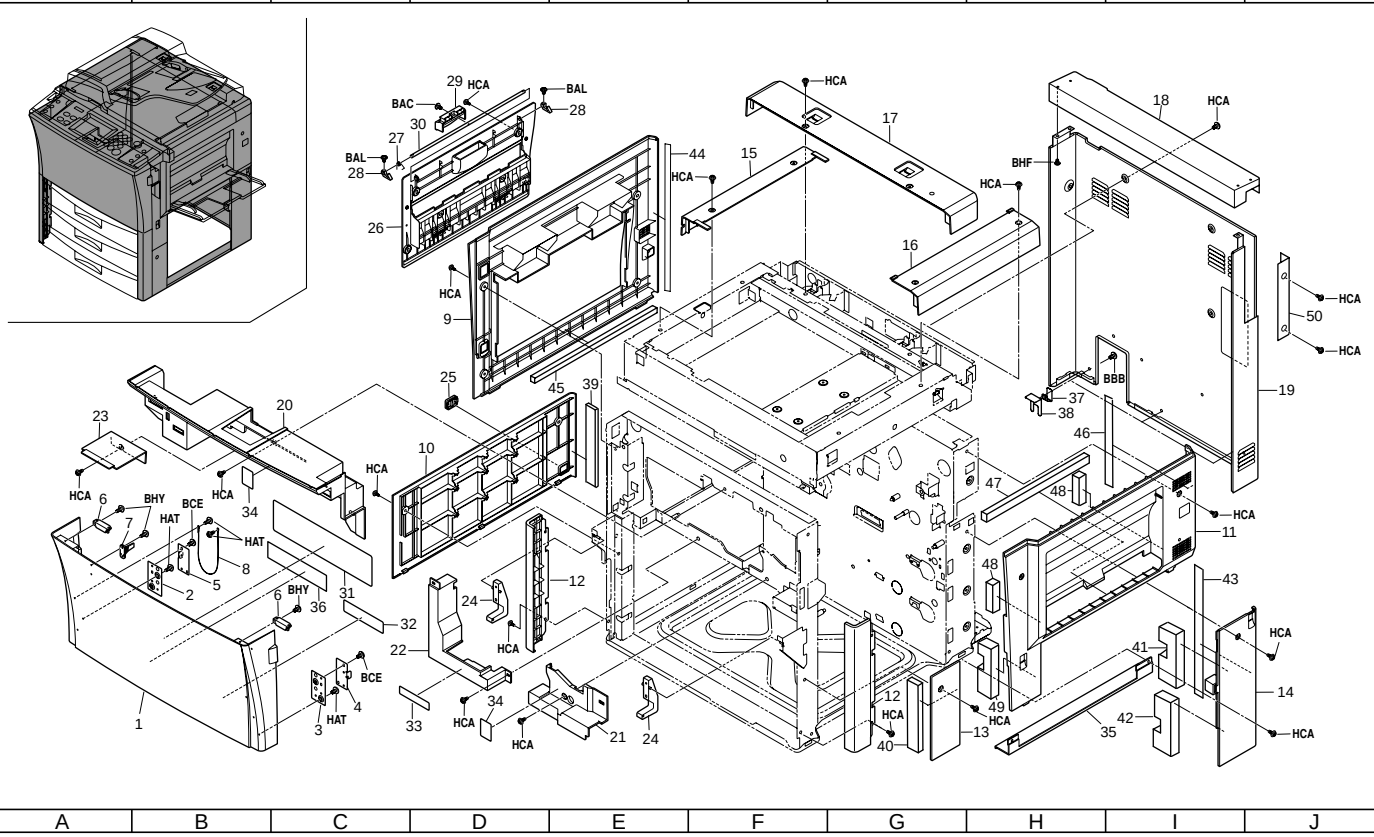

FIG. 1 EXTERIOR COVERS (KM-4230)

2A3

SP	Ref. No.	Part. No.	Description	Quantity		
				230V	240V	120V
◉	1	2A304010	FRONT COVER	1	1	1
	2	2AC04200	LEFT RETAINER,HINGE	1	1	1
	3	2AC04210	RIGHT RETAINER,HINGE	1	1	1
	4	33904310	RIGHT BASE,HINGE	1	1	1
	5	33904320	LEFT BASE,HINGE	1	1	1
	6	60804120	MAGNET CATCH	2	2	2
	7	65004171	HOLDER,SAFETY SWITCH	1	1	1
	8	75704280	STRAP FRONT COVER	1	1	1
◉	9	2A304020	INNER LEFT COVER	1	1	1
◉	10	2A304030	LOWER LEFT COVER	1	1	1
◉	11	2A304040	INNER RIGHT COVER	1	1	1
◉	12	2A304050	LOWER FRONT RIGHT COVER A	2	2	2
◉	13	2A304060	LOWER FRONT RIGHT COVER B	1	1	1
◉	14	2A304070	LOWER REAR RIGHT COVER	1	1	1
◉	15	2A304080	UPPER LEFT COVER	1	1	1
◉	16	2A304090	UPPER RIGHT COVER	1	1	1
◉	17	2A304100	UPPER REAR COVER A	1	1	1
◉	18	2A304110	UPPER REAR COVER B	1	1	1
◉	19	2A304120	LOWER REAR COVER	1	1	1
	20	2AC04150	INNER COVER	1	1	1
	21	2AC04160	RIGHT INNER COVER	1	1	1
	22	2AC04170	LEFT INNER COVER	1	1	1
	23	2AC04190	LID,OPERATION UNIT ROM	1	1	1
	24	33904130	FRONT HINGE,COVER	2	2	2
◉	25	2A304160	COVER,HEATER SWITCH	1	1	1
◉	26	2A304130	COVER,EJECT	1	1	1
	27	33906640	RIGHT SPRING,FEED RELEASE	1	1	1
	28	33906670	RIGHT HOOK,FEED RELEASE	2	2	2
◉	29	68204180	RIGHT HANDLE,FEED RELEASE(K M)	1	1	1
	30	33906690	RIGHT SHAFT,FEED RELEASE	1	1	1
◉	31	2A305010	LABEL,MACHINE OPERATION	1	1	1
	32	73905191	LABEL,SUPPLY(E,F,S)	0	0	1
	32	2AC05130	LABEL,SUPPLY(EUR)	1	0	0
	32	73905200	LABEL,SUPPLY(E,F,G,S)	0	1	0
	33	2AC05140	LABEL,DRUM CAUTION(EXP)	0	0	1
	33	2AC05150	LABEL,DRUM CAUTION(EUR)	1	1	0
	34	2AG05200	LABEL,HIGH VOLTAGE CAUTION(EXP)	2	2	2
	35	33904380	LOWER PROTECTING PLATE,FEED	1	1	1
	36	2AC05100	LABEL,JAM RELEASE	1	1	1
	37	18518200	GROUND PLATE,CLEANING BRUSH	3	3	3
	38	2AC26320	HOLDER,GROUND	3	3	3
	39	2AC04420	LOWER LEFT SPONGE,COVER(EUR)	1	0	0
	40	2AC04430	LEFT SPONGE A,MIDDLE COVER(EUR)	1	0	0
	41	2AC04270	LOWER REAR RIGHT SPONGE B,COVER(EUR)	1	0	0
	42	2AC04280	LOWER REAR RIGHT SPONGE C,COVER(EUR)	1	0	0
	43	2AC04260	LOWER REAR RIGHT SPONGE A,COVER(EUR)	1	0	0
	44	2AC04430	LEFT SPONGE A,MIDDLE COVER(EUR)	1	0	0
	45	2AC04450	LEFT SPONGE B,MIDDLE COVER(EUR)	1	0	0
	46	2AC04290	RIGHT SPONGE A,MIDDLE COVER(EUR)	1	0	0
	47	2AC04310	RIGHT SPONGE C,MIDDLE COVER(EUR)	1	0	0
	48	2AC04320	RIGHT SPONGE D,MIDDLE COVER(EUR)	2	0	0
	49	2AC04300	RIGHT SPONGE B,MIDDLE COVER(EUR)	1	0	0
	50	2A304240	LID,CONTROLLER	1	1	1

• Parts with "•" are component parts or sub-assemblies of the assembly appearing immediately above them.
• Parts with "◉" indicates the Service parts.

• Parts with "• •" are component parts or sub-assembly with "•" appearing immediately above them.

FIG. 2 FRAMES

2A3/2A4

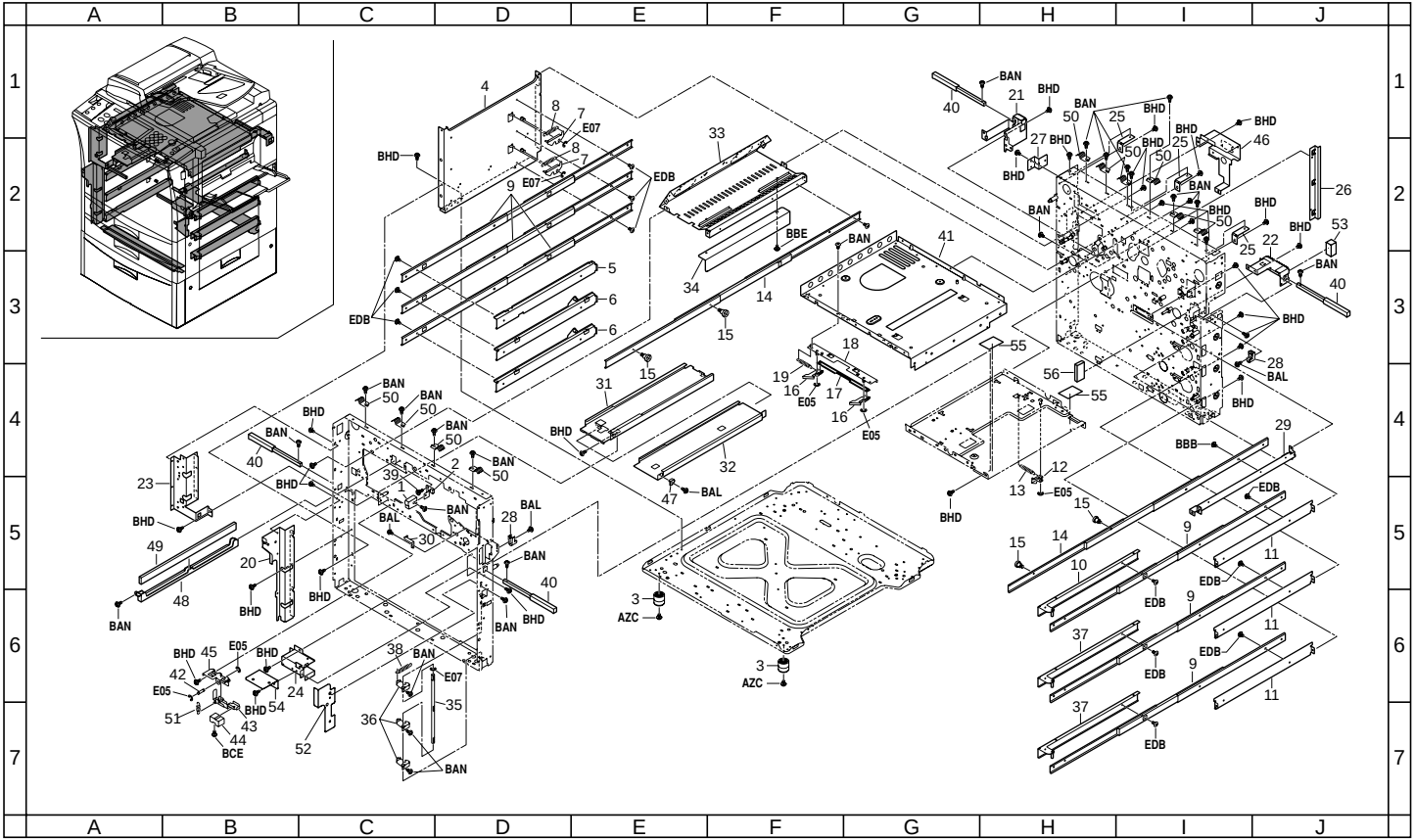

FIG. 2 FRAMES

2A3/2A4

SP	Ref. No.	Part. No.	Description	Quantity 230V	240V	120V
	1	2AC08290	LEVER,IMAGE FORMATION STOPPER	1	1	1
	2	2AC08270	STOPPER,IMAGE FORMATION UNIT	1	1	1
	3	66102140	BASE,RUBBER	2	2	2
	4	2AC02050	LOWER LEFT REINFORCEMENT	1	1	1
	5	2AC02110	MOUNT,RAIL DUPLEX	1	1	1
	6	33902070	LEFT MOUNT,RAIL	2	2	2
	7	33902120	HOOK,CASSETTE RETAINING	2	2	2
	8	33902130	SPRING,CASSETTE HOOK	2	2	2
◉	9	66107084	SLIDER,CASSETTE	6	6	6
	10	2AC07340	RIGHT MOUNT,RAIL	1	1	1
	11	33902060	RIGHT REINFORCEMENT	3	3	3
	12	2AC07360	HOOK,DUPLEX LOCK	1	1	1
	13	2AC07410	SPRING,DUPLEX HOOK	1	1	1
	14	2AC08080	SLIDER,IMAGE FORMATION UNIT	2	2	2
	15	2AC08170	PIN,IMAGE FORMATION UNIT	4	4	4
	16	2AC08190	HOOK,IMAGE FORMATION UNIT	2	2	2
	17	2AC08200	MOVING PLATE,HOOK	1	1	1
	18	2AC08210	MOUNT,HOOK	1	1	1
	19	78507090	SPRING,PF LOOP PAD	1	1	1
	20	2AD02030	LEFT LOWER FRONT REINFORCEMENT	1	1	1
	21	2AC02070	REAR LEFT MOUNT,HANDLE	1	1	1
	22	2AC02080	REAR RIGHT MOUNT,HANDLE	1	1	1
	23	2AC02091	LEFT UPPER FRONT REINFORCEMENT	1	1	1
	24	2AC02101	FRONT RIGHT MOUNT,HANDLE	1	1	1
	25	2AC02130	UPPER REAR REINFORCEMENT	3	3	3
	26	2AC02160	SHIELD PLATE,POWER SOURCE	1	1	1
	27	2AC04220	LOWER REAR MOUNT,COVER	1	1	1
	28	2AC06170	FULCRUM PLATE,BYPASS TABLE	2	2	2
	29	2AC08091	MOUNT,SLIDER	1	1	1
	30	2AC15270	GROUND PLATE,TONER MOTOR	1	1	1
	31	2AC20150	LOWER REINFORCEMENT,FIXING	1	1	1
	32	2AC20180	RAIL,FIXING UNIT	1	1	1
	33	2AC23010	UPPER PARTITION,FIXING	1	1	1
	34	2AC23020	RIGHT PARTITION,FIXING	1	1	1
	35	33902140	SHAFT,CASSETTE LOCK	1	1	1
	36	33902150	STOPPER,CASSETTE LOCK	3	3	3
	37	68707050	RIGHT MOUNT,RAIL	2	2	2
◉	38	33902160	SPRING,CASSETTE LOCK	1	1	1
	39	71802210	PIN,DRUM LIFT	1	1	1
	40	18502160	HANDLE,MACHINE	4	4	4
	41	2AC13020	BASE,LSU	1	1	1
	42	2AC20100	FULCRUM PIN,FIXING UNIT RELEASE	1	1	1
	43	2AC20110	LEVER,FIXING UNIT RELEASE	1	1	1
	44	2AC20120	HANDLE,FIXING UNIT RELEASE	1	1	1
	45	2AC20130	MOUNT,FIXING UNIT RELEASE	1	1	1
	46	2AC20170	MOUNT,FIXING DRAWER	1	1	1
	47	2AC20190	STOPPER,FIXING UNIT	1	1	1
	48	2AC23040	MOUNT,OZONE FILTER	1	1	1
◉	49	2AC23050	FILTER,COOLING	1	1	1
	50	18526240	PLATE SPRING A,GROUND REINFORCEMENT	10	10	10
	51	61716110	SPRING,CLEANING DRIVE TENSION	1	1	1
	52	2AD04100	BASE,MAGNET	1	1	1
	53	2AC26310	SHIELD 10X8X20,GASKET	1	1	0
	54	2AD04090	MOUNT,SAFETY SWITCH	1	1	1
	55	2AC04340	VIBRATION INSULATOR,MIDDLE(EUR)	2	0	0
	56	2AC04380	REAR SPONGE,FRAME(EUR)	1	0	0

• Parts with "•" are component parts or sub-assemblies of the assembly appearing immediately above them.
• Parts with "◉" indicates the Service parts.

• Parts with "• •" are component parts or sub-assembly with "•" appearing immediately above them.

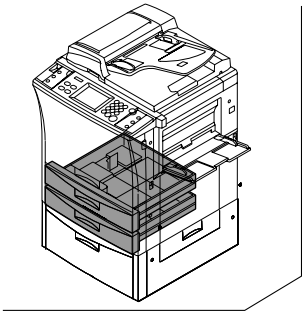

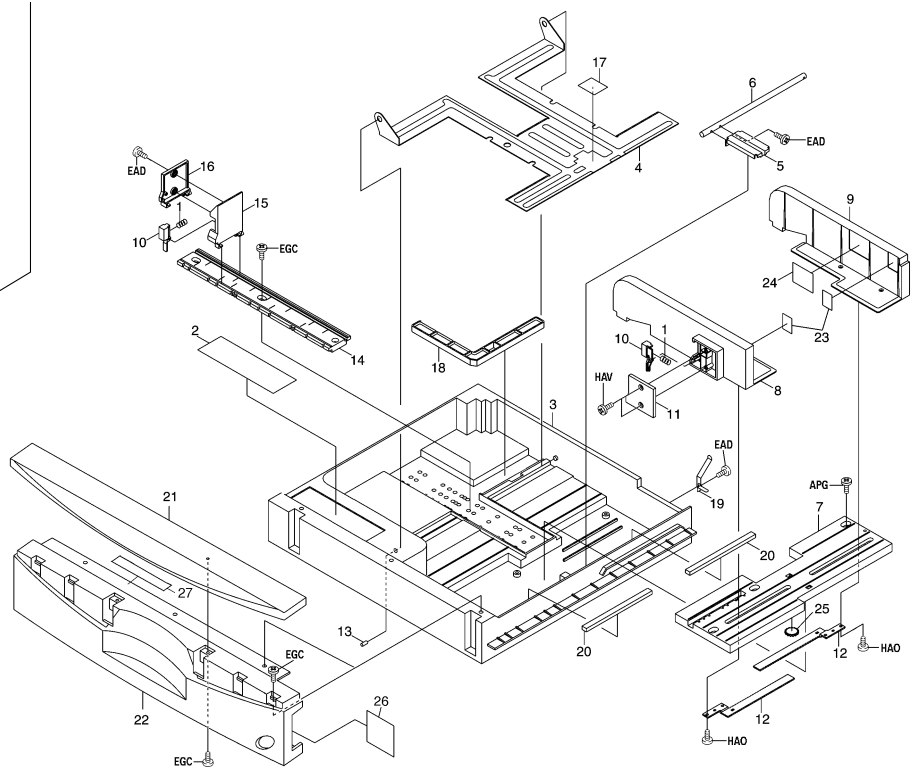
17
6
EAD
5
4
EAD
16
15
10
EGC
9
24
23
2
14
18
10
1
HAV
11
8
3
EAD
19
APG
7
21
20
27
13
20
25
12
HAO
EGC
22
26
12
EGC
HAO

FIG. 3 CASSETTE (230/240V)

SP	Ref. No.	Part. No.	Description	Quantity		
				230V	240V	120V
		68200080	CASSETTE ASS'Y U2(K M)	2	2	0
	1	•66007120	SPRING,CURSOR C	4	4	0
◉	2	•33905020	LABEL,CASSETTE OPERATION	2	2	0
	3	•33907012	CASSETTE	2	2	0
	4	•33907020	WORK PLATE,CASSETTE	2	2	0
	5	•33907030	WORK PLATE,LIFT CASSETTE	2	2	0
	6	•33968220	CASSETTE LIFT SHAFT ASS'Y	2	2	0
	7	•33907050	RAIL A,CURSOR	2	2	0
	8	•33907060	CURSOR A,CASSETTE	2	2	0
	9	•33907070	CURSOR B,CASSETTE	2	2	0
	10	•33907080	LEVER,CASSETTE CURSOR	4	4	0
	11	•33907090	LID A,CURSOR	2	2	0
◉	12	•33907100	RACK,CASSETTE	4	4	0
	13	•66007310	PIN,CASSETTE WORK PLATE	2	2	0
	14	•33907120	RAIL C,CURSOR	2	2	0
	15	•33907130	CURSOR C,CASSETTE	2	2	0
	16	•33907140	LID C,CURSOR	2	2	0
	17	•66107100	PAD,CASSETTE	2	2	0
	18	•33907180	DETECTION PLATE,CASSETTE	2	2	0
	19	•33907190	GROUND PLATE,CASSETTE	2	2	0
	20	•33907210	CUSHION,CASSETTE WORK PLATE	4	4	0
	21	•68204190	UPPER COVER,CASSETTE(K M)	2	2	0
	22	•68204200	LOWER COVER,CASSETTE(K M)	2	2	0
	23	•60907170	CUSHION,CASSETTE R	4	4	0
◉	24	•61705110	LABEL,PAPER UPPER LIMIT	2	2	0
◉	25	•65914120	GEAR 18,IDLE DEVELOPING	2	2	0
◉	26	68205100	LABEL,CASSETTE SIZE(METRIC K M)	2	2	0
	27	2AC05180	LABEL,PAPER SET	2	2	0

• Parts with "•" are component parts or sub-assemblies of the assembly appearing immediately above them.
• Parts with "◉" indicates the Service parts.

• Parts with "• •" are component parts or sub-assembly with "•" appearing immediately above them.

FIG. 3 CASSETTE (120V)

2A3/2A4

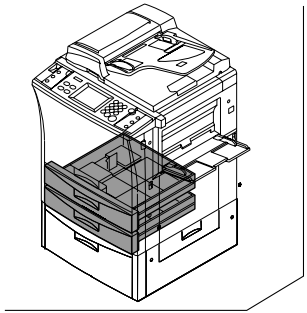

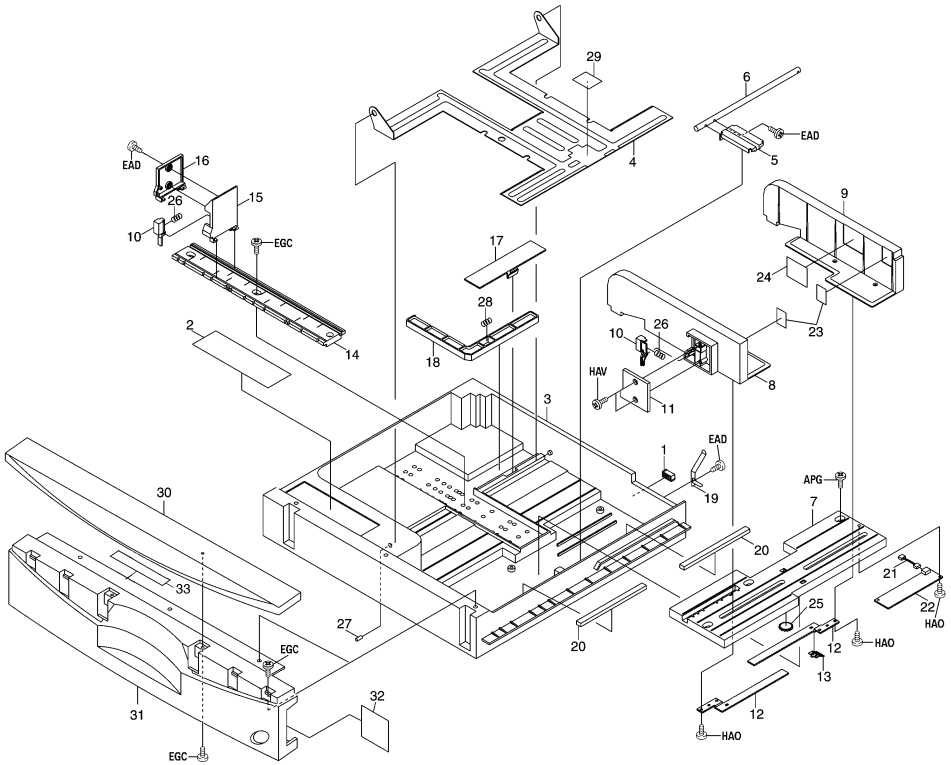

FIG. 3 CASSETTE (120V)

SP	Ref. No.	Part. No.	Description	Quantity		
				230V	240V	120V
		68200070	CASSETTE ASS'Y U(K M)	0	0	2
	1	•J0463080	PLUG,QR/P15-8S-C(HIROSE)	0	0	2
◉	2	•33905020	LABEL,CASSETTE OPERATION	0	0	2
	3	•33907012	CASSETTE	0	0	2
	4	•33907020	WORK PLATE,CASSETTE	0	0	2
	5	•33907030	WORK PLATE,LIFT CASSETTE	0	0	2
	6	•33968220	CASSETTE LIFT SHAFT ASS'Y	0	0	2
	7	•33907050	RAIL A,CURSOR	0	0	2
	8	•33907060	CURSOR A,CASSETTE	0	0	2
	9	•33907070	CURSOR B,CASSETTE	0	0	2
	10	•33907080	LEVER,CASSETTE CURSOR	0	0	4
	11	•33907090	LID A,CURSOR	0	0	2
◉	12	•33907100	RACK,CASSETTE	0	0	4
◉	13	•33907110	TERMINAL,PAPER SIZE PCB	0	0	2
	14	•33907120	RAIL C,CURSOR	0	0	2
	15	•33907130	CURSOR C,CASSETTE	0	0	2
	16	•33907140	LID C,CURSOR	0	0	2
	17	•33907160	LID,PAPER SIZE DETECTION	0	0	2
	18	•33907170	DETECTION PLATE,PAPER SIZE	0	0	2
	19	•33907190	GROUND PLATE,CASSETTE	0	0	2
	20	•33907210	CUSHION,CASSETTE WORK PLATE	0	0	4
	21	•33927210	WIRE,CASSETTE UNIT	0	0	2
	22	•33928111	SIZE DETECTION PCB	0	0	2
	23	•60907170	CUSHION,CASSETTE R	0	0	4
◉	24	•61705110	LABEL,PAPER UPPER LIMIT	0	0	2
◉	25	•65914120	GEAR 18,IDLE DEVELOPING	0	0	2
	26	•66007120	SPRING,CURSOR C	0	0	4
	27	•66007310	PIN,CASSETTE WORK PLATE	0	0	2
◉	28	•66106080	SPRING,PAD	0	0	2
◉	29	•66107100	PAD,CASSETTE	0	0	2
◉	30	•68204190	UPPER COVER,CASSETTE(K M)	0	0	2
◉	31	•68204200	LOWER COVER,CASSETTE(K M)	0	0	2
◉	32	68205110	LABEL,CASSETTE SIZE(INCH K M)	0	0	2
	33	2AC05180	LABEL,PAPER SET	0	0	2

• Parts with "•" are component parts or sub-assemblies of the assembly appearing immediately above them.
• Parts with "◉" indicates the Service parts.

• Parts with "• •" are component parts or sub-assembly with "•" appearing immediately above them.

FIG. 4 PAPER FEED-IN SECTION I

2A3/2A4

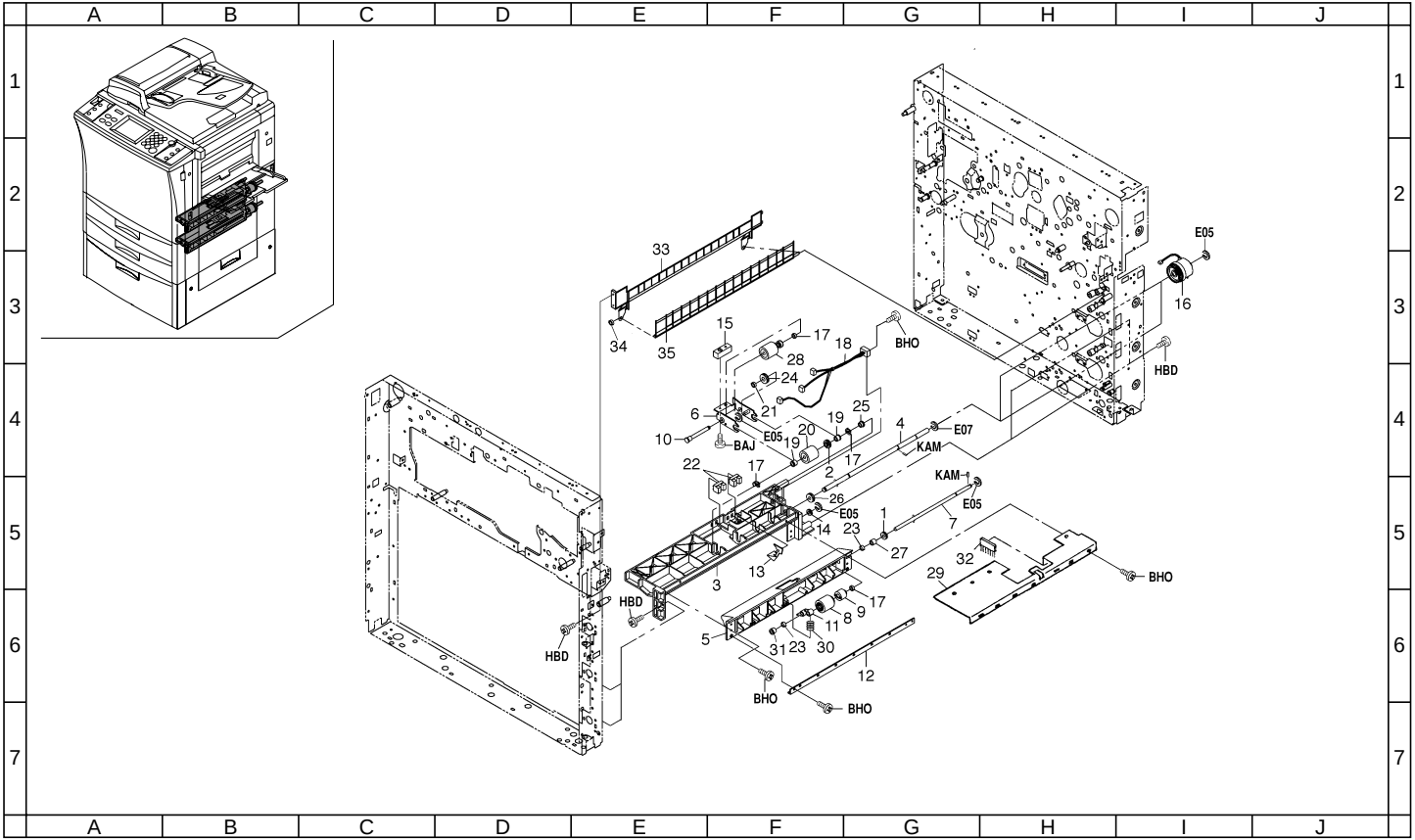

FIG. 4 PAPER FEED-IN SECTION I

SP	Ref. No.	Part. No.	Description	Quantity		
				230V	240V	120V
◉	1	45727501	GEAR,TONER FEED ROLLER	2	2	2
◉	2	29806490	GEAR 16T	2	2	2
	3	33906012	UPPER HOUSING,PAPER FEED	2	2	2
	4	33968180	UPPER PAPER FEED SHAFT ASS'Y	2	2	2
	5	33906030	LOWER HOUSING,PAPER FEED	2	2	2
	6	33906040	SUPPORT PLATE,LEADING FEED PULLEY	2	2	2
	7	33968191	LOWER PAPER FEED SHAFT ASS'Y	2	2	2
◉	8	33906060	LOWER PULLEY,PAPER FEED	2	2	2
◉	9	33906070	TORQUE LIMITER,PAPER FEED	2	2	2
	10	33906080	SHAFT,LEADING FEED PULLEY	2	2	2
◉	11	33906090	LOWER LEVER,PAPER FEED PULLEY RELEASE	2	2	2
	12	33906100	REINFORCEMENT,PAPER FEED HOUSING	2	2	2
	13	33906150	ACTUATOR,PAPER EMPTY	2	2	2
◉	14	33906160	GEAR 16,PAPER FEED	2	2	2
	15	33906180	WEIGHT,LEADING FEED PULLEY	2	2	2
◉	16	33906110	CLUTCH,PAPER FEED	2	2	2
	17	33906630	STOPPER 5,RING	8	8	8
	18	33927160	WIRE,PAPER FEED UNIT	2	2	2
◉	19	60907880	BUSHING,BYPASS SHAFT	4	4	4
◉	20	61706770	UPPER PULLEY,BYPASS	2	2	2
	21	63511220	STOP RING,4	2	2	2
	22	66006350	SWITCH,CASSETTE LIFT	4	4	4
	23	33906211	VIBRATION INSULATOR,RELEASE LEVER	4	4	4
◉	24	66022190	GEAR,21 DEVELOPING	2	2	2
◉	25	67322230	BUSHING 8	2	2	2
◉	26	71815110	IDLE GEAR 18,SUB UNIT	2	2	2
◉	27	73210450	BUSH, 6	2	2	2
◉	28	34806090	PULLEY,LEADING FEED	2	2	2
	29	33906291	UPPER REINFORCEMENT,HOUSING PAPER FEED	2	2	2
	30	33906190	LOWER SPRING,PAPER FEED	2	2	2
◉	31	63806290	BUSHING,6	2	2	2
◉	32	75817010	STATIC BRUSH FRONT TRANSFER	2	2	2
	33	2AC07180	UPPER GUIDE,DUPLEX FEED	1	1	1
	34	63511220	STOP RING,4	1	1	1
	35	68707020	LOWER GUIDE,DUPLEX FEED	1	1	1

• Parts with "•" are component parts or sub-assemblies of the assembly appearing immediately above them.
• Parts with "◉" indicates the Service parts.

• Parts with "• •" are component parts or sub-assembly with "•" appearing immediately above them.

FIG. 5 PAPER FEED-IN SECTION II

2A3/2A4

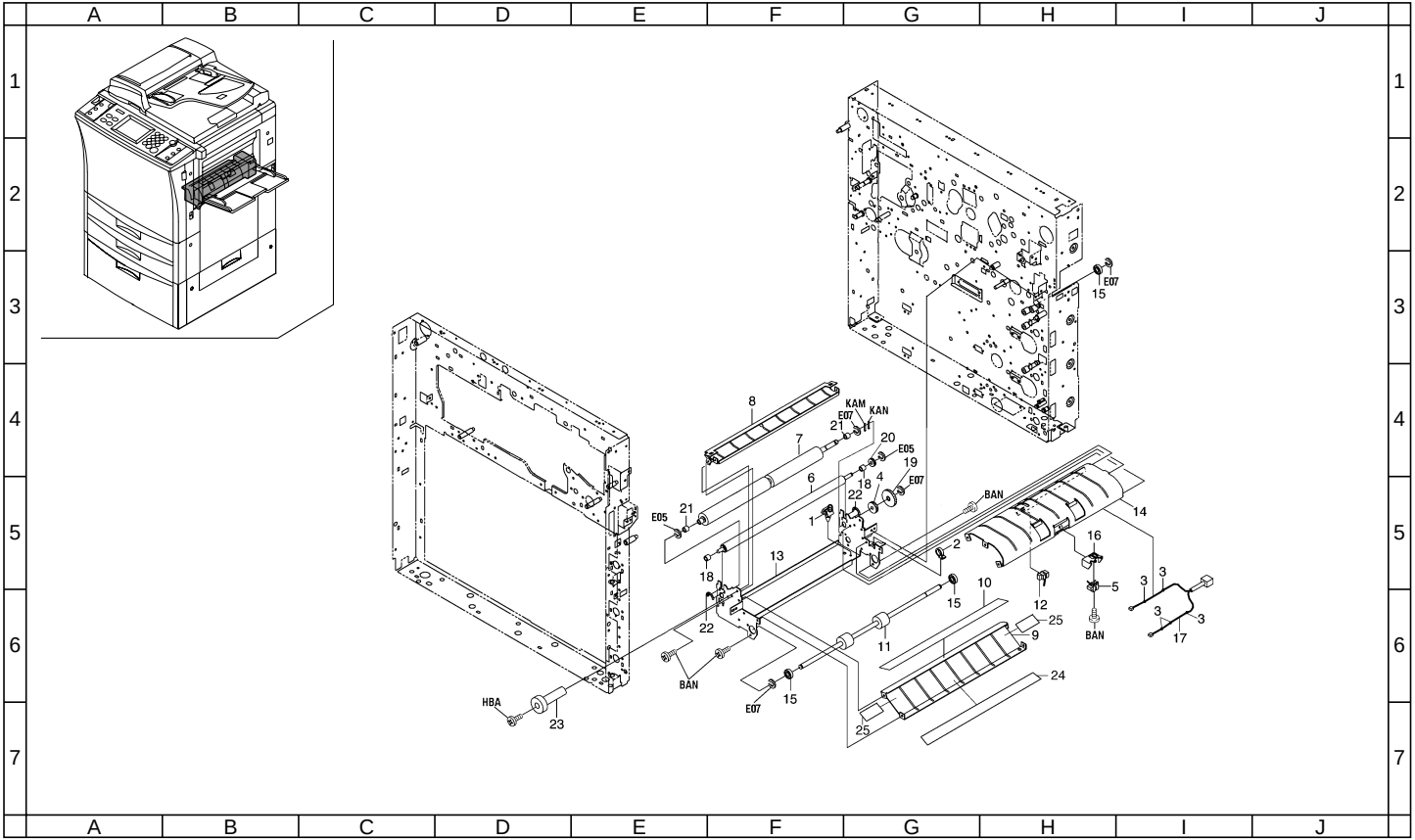

FIG. 5 PAPER FEED-IN SECTION II

SP	Ref. No.	Part. No.	Description	Quantity		
				230V	240V	120V
	1	M2105730	MINIATURE CLAMP,UAMS-07-0	1	1	1
	2	M2107120	BINDING BAND SG-130	1	1	1
	3	M2307010	BINDING BAND,T18R	5	5	5
◉	4	72622050	GEAR 25,FEED LOOP	1	1	1
	5	33906140	SWITCH,VERTICAL CONVEYING	1	1	1
◉	6	18506100	UPPER ROLLER A,FEED	1	1	1
◉	7	2AC06310	LOWER ROLLER A,FEED	1	1	1
	8	2AC06011	UPPER GUIDE,FEED	1	1	1
	9	2AC06020	GUIDE,FEED MIDDLE	1	1	1
	10	2AC06050	GUIDE FILM,FEED MIDDLE	1	1	1
◉	11	2AC06060	ROLLER B,FEED	1	1	1
	12	33906340	SWITCH,FEED	1	1	1
	13	2AC06041	FRAME,FEED	1	1	1
	14	2AC06030	LOWER GUIDE,FEED	1	1	1
◉	15	33906610	BEARING,FEED	3	3	3
	16	33906620	MOUNT BASE,PAPER FEED SWITCH	1	1	1
	17	2AC27590	JUNCTION WIRING,FEED	1	1	1
◉	18	60606101	BUSHING FEED BACK ROLLER	2	2	2
◉	19	61522040	DRIVE GEAR,FIXING SECTION	1	1	1
◉	20	66006810	GEAR,16 BYPASS PULLEY	1	1	1
◉	21	67322230	BUSHING 8	2	2	2
	22	77706461	PRESSING SPRING	2	2	2
	23	2AC06220	DIAL,FEED	1	1	1
	24	2AC04350	VIBRATION INSULATOR,FEED(EUR)	1	0	0
	25	2AC04440	SPONGE,FEED(EUR)	2	0	0

• Parts with "•" are component parts or sub-assemblies of the assembly appearing immediately above them.
• Parts with "◉" indicates the Service parts.

• Parts with "• •" are component parts or sub-assembly with "•" appearing immediately above them.

FIG. 6 PAPER FEED-IN SECTION III

2A3/2A4

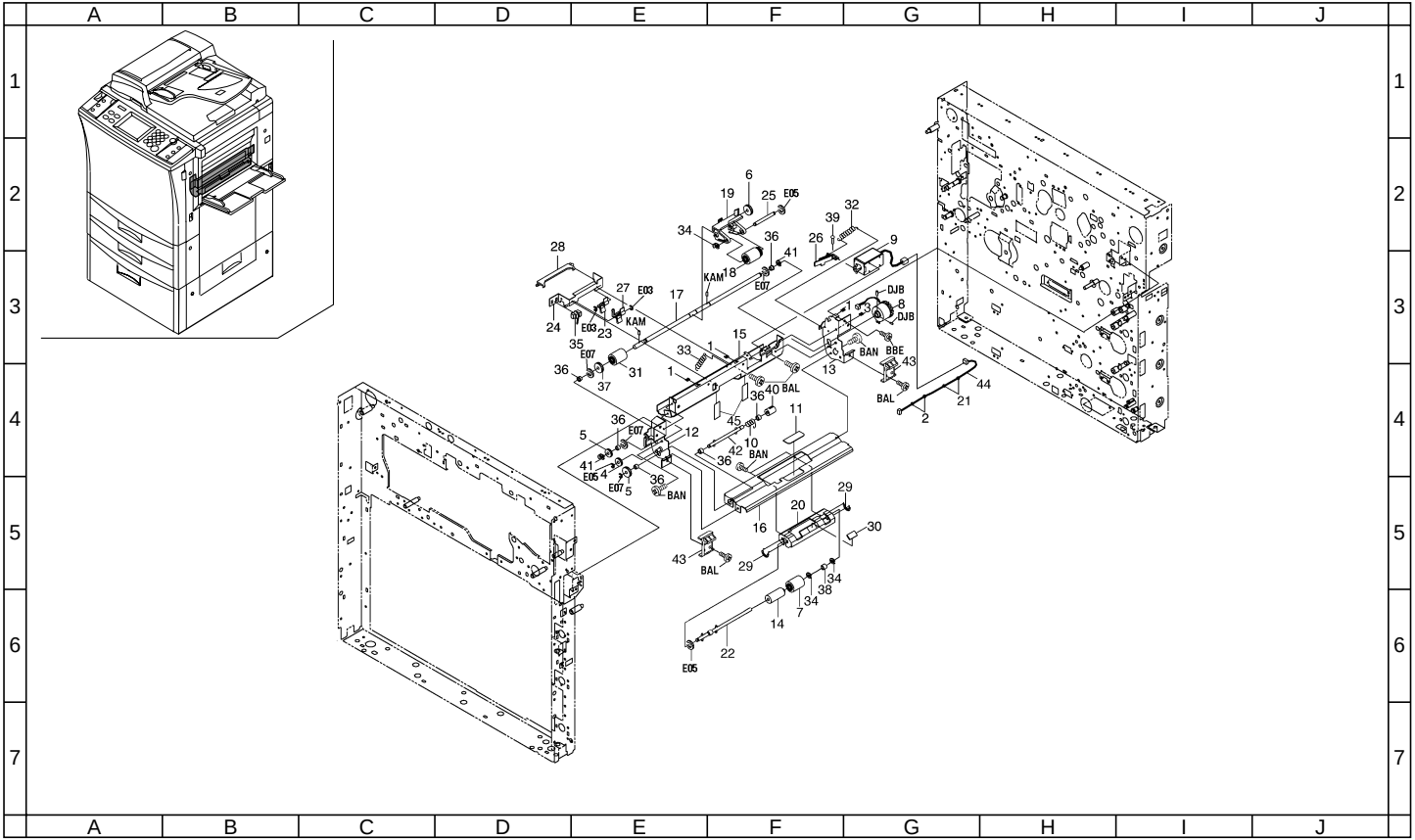

FIG. 6 PAPER FEED-IN SECTION III

SP	Ref. No.	Part. No.	Description	Quantity		
				230V	240V	120V
	1	M2104260	EDGING,EDS-0607U(KITAGAWA)	3	3	3
	2	M2107120	BINDING BAND SG-130	2	2	2
	3	M2105720	MINIATURE CLAMP,UAMS-05-2	1	1	1
◉	4	29807100	GEAR 16,BYPASS	1	1	1
◉	5	29814340	GEAR 18,DEVELOPER UNIT	2	2	2
◉	6	29822230	GEAR 16T,PF IDLE	1	1	1
◉	7	33906060	LOWER PULLEY,PAPER FEED	1	1	1
◉	8	33906130	CLUTCH,BYPASS	1	1	1
◉	9	33906370	SOLENOID,BYPASS	1	1	1
◉	10	33906390	SPRING,SHAFT STOPPER	1	1	1
	11	33906400	FRICTION PLATE,BYPASS	1	1	1
	12	2AC06090	FRONT FRAME,BYPASS	1	1	1
	13	2AC06100	REAR FRAME,BYPASS	1	1	1
◉	14	33906430	TORQUE LIMITER,BYPASS	1	1	1
	15	33906441	UPPER GUIDE,BYPASS	1	1	1
	16	2AC06110	LOWER GUIDE,BYPASS	1	1	1
	17	33906460	SHAFT,BYPASS PAPER FEED	1	1	1
◉	18	33906470	PULLEY,LEADING FEED	1	1	1
	19	2AC06120	SUPPORT PLATE,LEADING FEED PULLEY BYPASS	1	1	1
	20	2AC06130	SUPPORT PLATE,SEPARATION PULLEY	1	1	1
	21	M2307010	BINDING BAND,T18R	2	2	2
	22	33968200	SEPARATION PULLEY SHAFT ASS'Y	1	1	1
	23	2AC06140	LEVER,PE	1	1	1
	24	33906941	MOUNT,STOPPER	1	1	1
	25	33906950	SHAFT,LEADING FEED PULLEY BYPASS	1	1	1
	26	2AC06150	LEVER,BYPASS SOLENOID	1	1	1
	27	2AC06160	STOPPER,PAPER	1	1	1
	28	33906980	LEVER,STOPPER RELEASE	1	1	1
	29	29717150	PRESSING SPRING,FEED BACK	2	2	2
◉	30	60907910	PAD,BYPASS	1	1	1
◉	31	61706770	UPPER PULLEY,BYPASS	1	1	1
	32	63312120	SPRING,HOOK HAND UNIT	1	1	1
◉	33	63506130	SPRING,PAPER FEED	1	1	1
	34	63511220	STOP RING,4	3	3	3
	35	66006350	SWITCH,CASSETTE LIFT	1	1	1
◉	36	67322230	BUSHING 8	6	6	6
◉	37	71815110	IDLE GEAR 18,SUB UNIT	1	1	1
◉	38	72107160	BUSHING 6,LOWER REGISTRATION ROLLER	1	1	1
	39	72518060	PIN B,DISPOSAL TANK FULCRUM	1	1	1
	40	74306520	JOINT,PULLEY DRIVE SHAFT	1	1	1
	41	75706040	STOPRING PAPER FEED PULLEY	2	2	2
	42	33968210	JOINT SHAFT ASS'Y	1	1	1
	43	2AC06280	STOPPER,BYPASS TABLE	2	2	2
◉	44	2AC27660	WIRE,BYPASS PAPER FEED	1	1	1
	45	2AC06330	FILM,BYPASS PAPER FEED	2	2	2

• Parts with "•" are component parts or sub-assemblies of the assembly appearing immediately above them.
• Parts with "◉" indicates the Service parts.

• Parts with "• •" are component parts or sub-assembly with "•" appearing immediately above them.

FIG. 7 PAPER FEED-IN SECTION IV

2A3/2A4

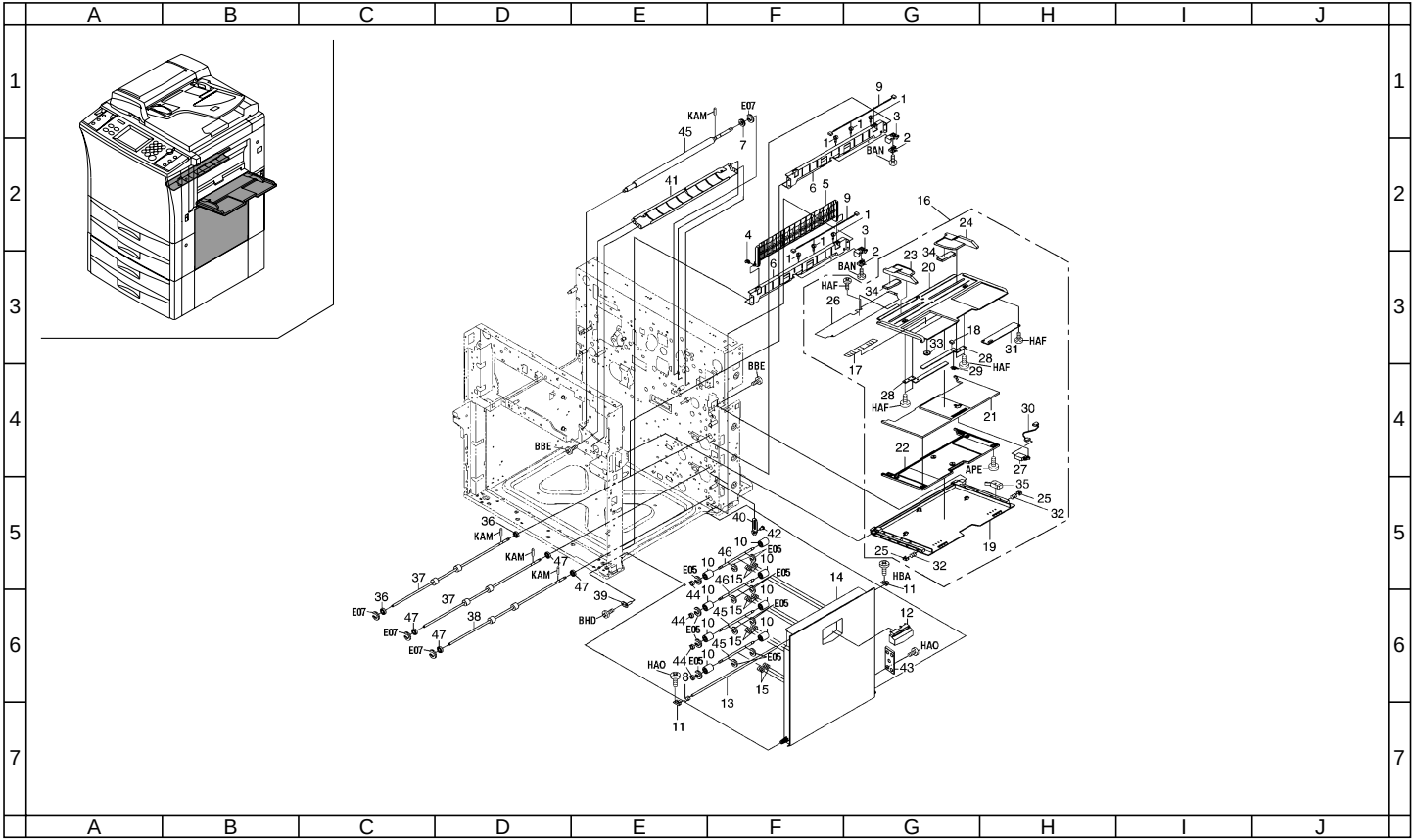

FIG. 7 PAPER FEED-IN SECTION IV

SP	Ref. No.	Part. No.	Description	Quantity		
				230V	240V	120V
	1	M2105720	MINIATURE CLAMP,UAMS-05-2	9	9	9
	2	33906140	SWITCH,VERTICAL CONVEYING	3	3	3
	3	33906620	MOUNT BASE,PAPER FEED SWITCH	3	3	3
	4	33906630	STOPPER 5,RING	2	2	2
	5	33906700	GUIDE,CONFLUENCE	2	2	2
	6	33906780	LEFT GUIDE,FEED	3	3	3
	7	71815110	IDLE GEAR 18,SUB UNIT	1	1	1
◉	8	33906640	RIGHT SPRING,FEED RELEASE	1	1	1
	9	2AC27600	WIRE,VERTICAL CONVEYING	3	3	3
◉	10	33906660	RIGHT PULLEY,FEED	8	8	8
	11	33906670	RIGHT HOOK,FEED RELEASE	2	2	2
◉	12	68204180	RIGHT HANDLE,FEED RELEASE(K M)	1	1	1
	13	33906690	RIGHT SHAFT,FEED RELEASE	1	1	1
◉	14	2A306030	RIGHT COVER,FEED	1	1	0
	15	2AC06400	SPRING,FEED	8	8	0
◉	16	2A300020	BYPASS TABLE ASS'Y(INCH)	0	0	1
◉	16	2A300030	BYPASS TABLE ASS'Y(METRIC)	1	1	0
◉	17	•18505180	ORIGINAL SIZE INDICATOR,BYPASS (INCH)	0	0	1
◉	17	•2AC05160	ORIGINAL SIZE INDICATOR,BYPASS(EUR)	1	1	0
◉	18	•18506220	PAD,BYPASS RACK	1	1	1
◉	19	•2A306050	TABLE A,BYPASS	1	1	1
◉	20	•2A306060	TABLE B,BYPASS	1	1	1
◉	21	•2A306070	TABLE C,BYPASS	1	1	1
◉	22	•2A306080	TABLE D,BYPASS	1	1	1
◉	23	•2A306010	FRONT CURSOR,BYPASS	1	1	1
◉	24	•2A306020	REAR CURSOR,BYPASS	1	1	1
	25	•33906880	STOPPER,BYPASS TABLE	2	2	2
	26	•33906900	COVER,CURSOR	1	1	1
	27	•33906990	SWITCH,BYPASS SIZE DETECTION	1	1	1
◉	28	•18506080	RACK,CASSETTE	2	2	2
◉	29	•33907110	TERMINAL,PAPER SIZE PCB	1	1	1
	30	•2AC27650	WIRE,BYPASS TRAY	1	1	1
◉	31	•33928111	SIZE DETECTION PCB	1	1	1
◉	32	•63516110	SPRING,TRANSFER	2	2	2
◉	33	•65914120	GEAR 18,IDLE DEVELOPING	1	1	1
◉	34	•33906220	PAD,BYPASS CURSOR	2	2	2
	35	•76727010	ORIGINAL SIZE SWITCH	1	1	1
◉	36	•33906610	BEARING,FEED	2	2	2
◉	37	2AC06380	ROLLER C,FEED	2	2	2
◉	38	2AC06390	ROLLER D,FEED	1	1	1
	39	33906770	RIGHT FULCRUM PIN,COVER FEED	1	1	1
	40	33906790	RIGHT ARM,FEED RELEASE	1	1	1
	41	2AC06270	UPPER GUIDE,REGISTRATION	1	1	1
	42	29820110	FRONT PIN,FULCRUM	1	1	1
	43	2AC06200	RIGHT MOUNT,COVER FEED	1	1	1
	44	34806140	STOPPER 4	4	4	4
	45	2AC06290	UPPER ROLLER,REGISTRATION	1	1	1
	46	2AC06340	SHAFT,VERTICAL CONVEYING	4	4	4
◉	47	2AZ22480	BUSHING 8-16,PAPER FEED	4	4	4

• Parts with "•" are component parts or sub-assemblies of the assembly appearing immediately above them.
• Parts with "◉" indicates the Service parts.

• Parts with "• •" are component parts or sub-assembly with "•" appearing immediately above them.

FIG. 8 PAPER CONVEYING SECTION 2A3/2A4

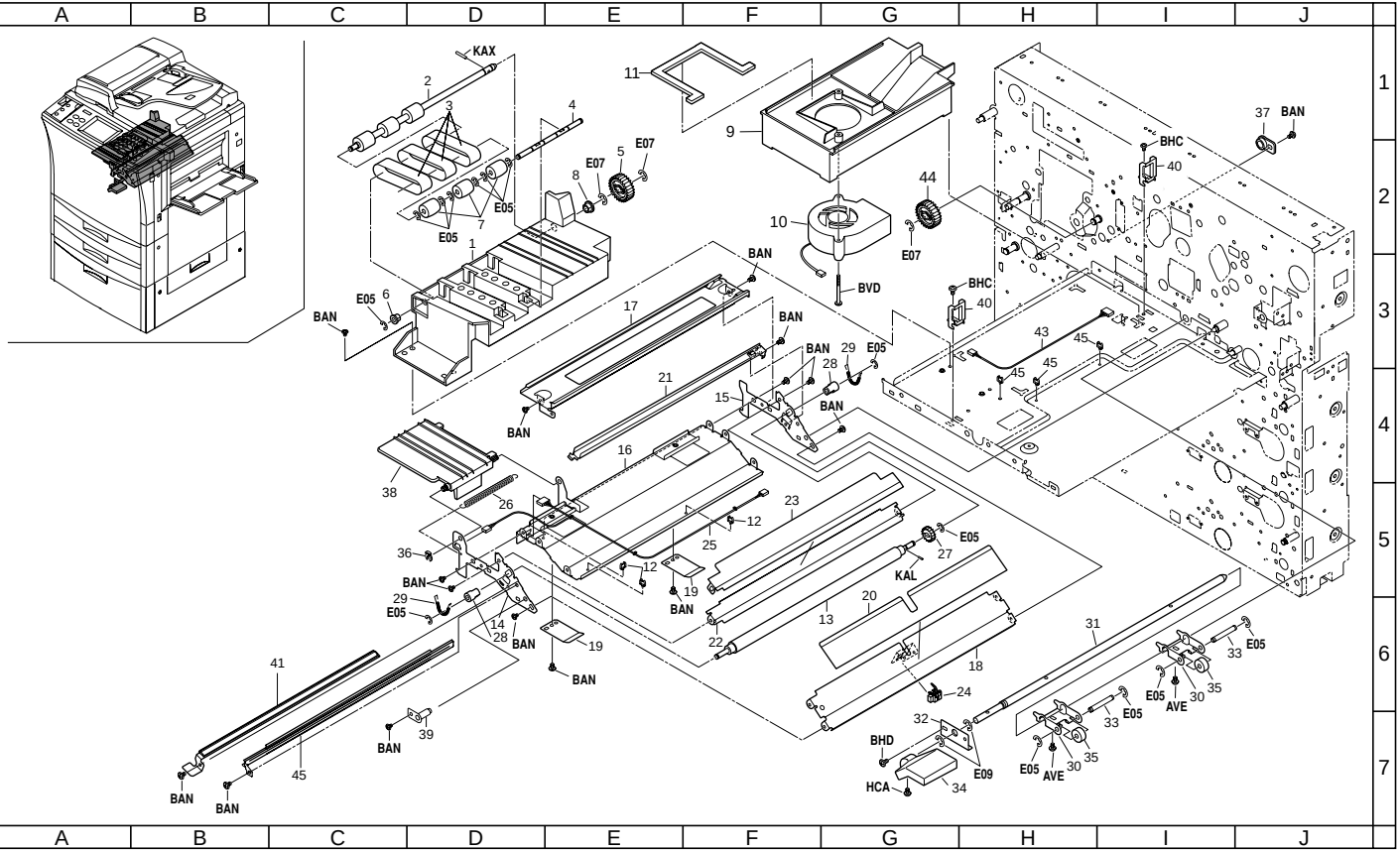

FIG. 8 PAPER CONVEYING SECTION

SP	Ref. No.	Part. No.	Description	Quantity		
				230V	240V	120V
	1	2AC16011	GUIDE,CONVEYING	1	1	1
◉	2	2AC16020	ROLLER,CONVEYING	1	1	1
◉	3	2AC16030	BELT,CONVEYING	3	3	3
	4	2AC16200	SHAFT,CONVEYING	1	1	1
◉	5	45727303	GEAR 26,CLUTCH	1	1	1
◉	6	29806810	BUSHING,6 REGISTRATION	1	1	1
◉	7	33916240	PULLEY,CONVEYING	3	3	3
◉	8	60907880	BUSHING,BYPASS SHAFT	1	1	1
	9	2AC16040	DUCT,CONVEYING	1	1	1
◉	10	2AC16180	FAN,CONVEYING	1	1	1
	11	2AC16250	SPONGE,CONVEYING	1	1	1
	12	M2105720	MINIATURE CLAMP,UAMS-05-2	3	3	3
◉	13	2AC06300	LOWER ROLLER,REGISTRATION	1	1	1
	14	2AC16050	FRONT FRAME,CONVEYING	1	1	1
	15	2AC16060	REAR FRAME,CONVEYING	1	1	1
	16	2AC16070	STAY,CONVEYING	1	1	1
	17	2AC16090	RAIL,TRANSFER CHARGER	1	1	1
	18	2AC16100	LOWER GUIDE,RESISTRATION	1	1	1
	19	2AC16130	PLATE SPRING,CONVEYING RELEASE	2	2	2
◉	20	2AC16211	FRONT FILM,RESISTRATION	1	1	1
	21	2AC16220	LOWER SUPPORT PLATE,RESISTRATION CLEANER	1	1	1
	22	2AC17020	LOWER FRONT GUIDE,TRANSFER	1	1	1
	23	2AC17131	LOWER FRONT FILM,TRANSFER	1	1	1
	24	2AC27340	SWITCH,REGISTRATION	1	1	1
	25	2AC27640	JUNCTION WIRING,RESISTANCE SW	1	1	1
	26	34816120	SPRING,CONVEYING	1	1	1
◉	27	66006810	GEAR,16 BYPASS PULLEY	1	1	1
◉	28	72107160	BUSHING 6,LOWER REGISTRATION ROLLER	2	2	2
	29	77706461	PRESSING SPRING	2	2	2
	30	2AC16110	ARM,RESISTRATION RELEASE	2	2	2
	31	2AC16120	SHAFT,TRANSFER RELEASE	1	1	1
	32	33916150	MOUNT,CONVEYING RELEASE SHAFT	1	1	1
	33	34816080	SHAFT,CONVEYING RELEASE PULLEY	2	2	2
	34	34816151	HANDLE,CONVEYING RELEASE	1	1	1
◉	35	76507110	COLLAR ORIGINAL FEEDBACK ROLLER	2	2	2
	36	63511220	STOP RING,4	1	1	1
◉	37	74718091	BUSHING CLEANING UNIT	1	1	1
	38	2AC16080	FRONT GUIDE,CONVEYING	1	1	1
	39	2AC16140	FULCRUM PIN,CONVEYING RELEASE	1	1	1
	40	2AC16240	STOPPER,CONVEYING	2	2	2
◉	41	2AC00630	LOWER REGISTRATION CLEANER ASS'Y	1	1	1
	42	M2105710	MINIATURE CLAMP,UAMS-05-0	3	3	3
	43	2AC27860	JUNCTION WIRING,CONVEYING	1	1	1
◉	44	61714140	GEAR,DEVELOPING SLEEVE	1	1	1
◉	45	2AC00640	UPPER RESISTRATION CLEANER ASS'Y	1	1	1

• Parts with "•" are component parts or sub-assemblies of the assembly appearing immediately above them.
• Parts with "◉" indicates the Service parts.

• Parts with "• •" are component parts or sub-assembly with "•" appearing immediately above them.

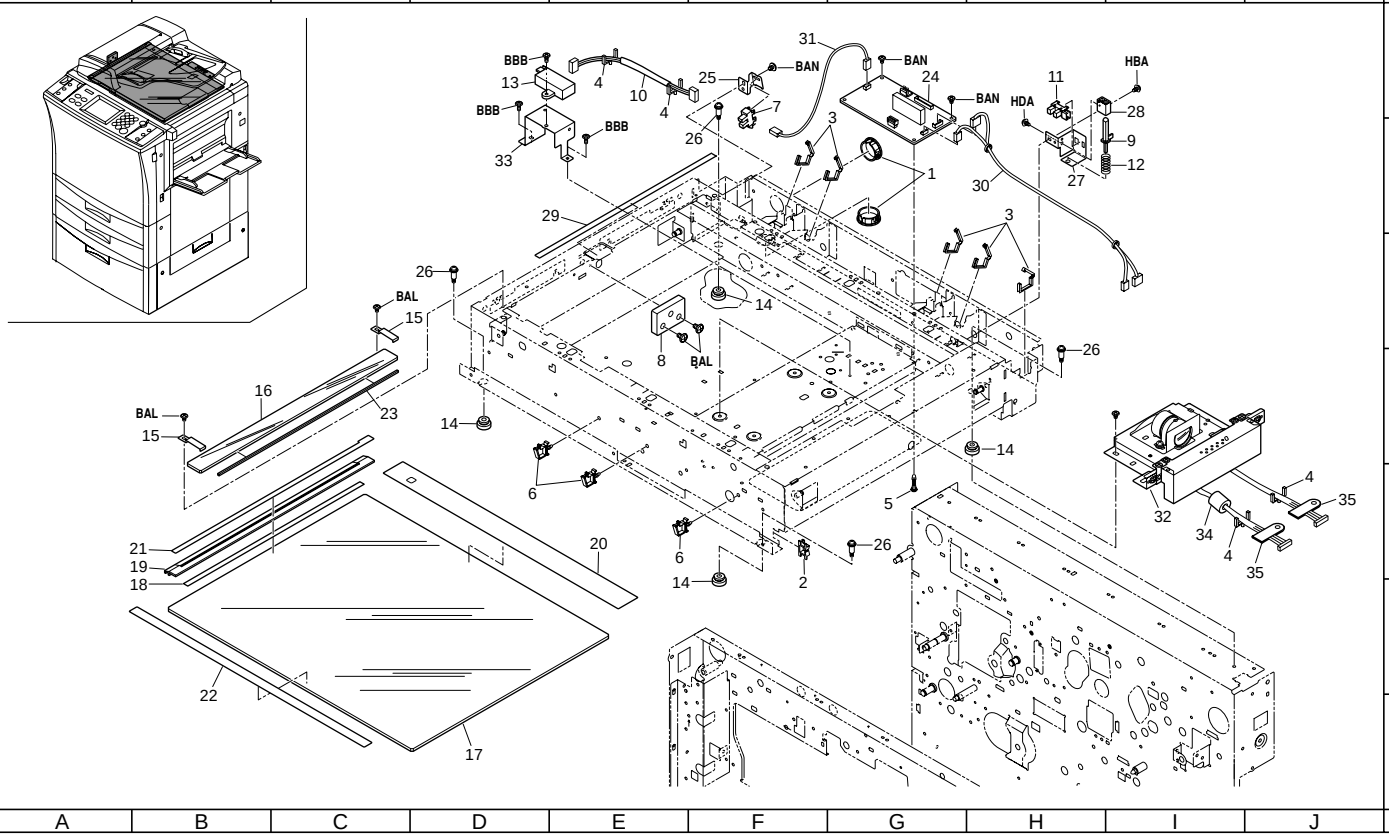
A B C D E F G H I J
1 2 3 4 5 6 7
BBB
BAN
BAL
HBA
HDA

FIG. 9 OPTICAL SECTION I

SP	Ref. No.	Part. No.	Description	Quantity		
				230V	240V	120V
	1	M1203510	OPEN BUSHING,OCB-1000	2	2	2
	2	M2104210	EDGING,EDS-2	1	1	1
	3	M2104250	EDGING,EDS-17L(KITAGAWA)	5	5	5
	4	M2105730	MINIATURE CLAMP,UAMS-07-0	2	2	4
	5	M2108490	SPACER,KGLS-12RT	2	2	2
	6	M2109010	WIRE SADDLE,WS-2NS	3	3	3
	7	72127100	PI SWITCH,OPTICAL SECTION	1	1	1
	8	2AC12410	SPACER,RETAINING PIN	1	1	1
	9	2AC12370	SWITCH,RELEASE DETECTION	1	1	1
	10	2A327350	WIRE,ORIGINAL SIZE DETECTION(INCH)	0	0	1
	10	2A327360	WIRE,ORIGINAL SIZE DETECTION(METRIC)	1	1	0
	11	35327400	SWITCH,FEED	1	1	1
	12	2AC12380	SPRING,RELEASE SWITCH	1	1	1
◉	13	35927290	SENSOR,ORIGINAL DETECTION	1	1	2
	14	36512430	BASE RUBBER,SCANNER SECTION	4	4	4
	15	2AC12280	HOLDER,ADF CONTACT GLASS	2	2	2
◉	16	35911450	CONTACT GLASS,ADF	1	1	1
◉	17	35912010	CONTACT GLASS	1	1	1
◉	18	35912200	STANDARD PLATE,SHADING	1	1	1
◉	19	2A305070	LEFT ORIGINAL SIZE INDICATOR	1	1	1
◉	20	2A305080	REAR ORIGINAL SIZE INDICATOR(METRIC)	1	1	0
◉	20	2A305090	REAR ORIGINAL SIZE INDICATOR(INCH)	0	0	1
◉	21	2A305100	LABEL,ORIGINAL SIZE INDICATOR(METRIC)	1	1	0
◉	21	2A305110	LABEL,ORIGINAL SIZE INDICATOR(INCH)	0	0	1
	22	35912490	FRONT ORIGINAL SIZE INDICATOR	1	1	1
	23	35912531	SPONGE,ORIGINAL SIZE INDICATOR	1	1	1
◉	24	2A301020	SCANNER DRIVE ASS'Y	1	1	1
	25	66212080	MOUNT,SCANNER SWITCH	1	1	1
	26	76610320	PIN TENSION PULLEY	4	4	4
◉	27	2AC12230	MOUNT,RELEASE SWITCH	1	1	1
◉	28	2AC12360	GUIDE,RELEASE SWITCH	1	1	1
	29	2AC12430	FILM,GLASS DUST SHIELD	1	1	1
	30	2A327400	WIRE A,SCANNER DRIVE	1	1	1
	31	2A327410	WIRE B,SCANNER DRIVE	1	1	1
◉	32	2A368070	ISU ASS'Y	1	1	1
	33	2A312020	MOUNT BASE,ORIGINAL DETECTION SENSOR	1	1	2
	34	33927590	CORE 7-15X18	1	1	0
	35	M2505170	CLAMP,GNK-2N(NIKKO)	2	2	0

• Parts with "•" are component parts or sub-assemblies of the assembly appearing immediately above them.
• Parts with "◉" indicates the Service parts.

• Parts with "• •" are component parts or sub-assembly with "•" appearing immediately above them.

FIG. 10 OPTICAL SECTION II

2A3/2A4

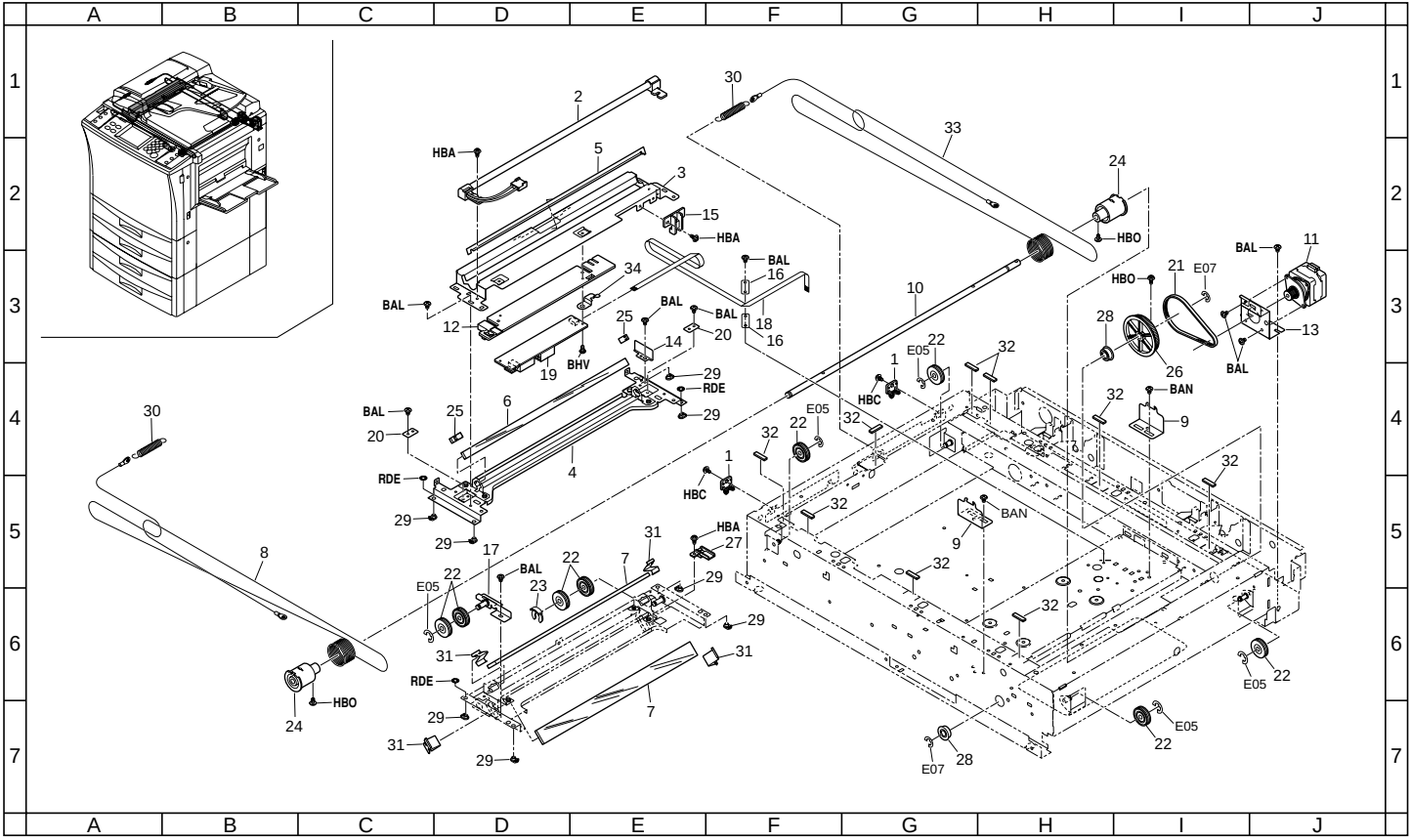

FIG. 10 OPTICAL SECTION II

SP	Ref. No.	Part. No.	Description	Quantity		
				230V	240V	120V
	1	18512340	GUIDE,SCANNER WIRE	2	2	2
◉	2	2AC12100	LAMP,SCANNER	1	1	1
	3	2AC12110	UPPER MIRROR FRAME A,SCANNER	1	1	1
	4	2AC12120	LOWER MIRROR FRAME A,SCANNER	1	1	1
	5	2AC12130	REFLECTOR,SCANNER	1	1	1
◉	6	2AC12140	MIRROR A	1	1	1
◉	7	2AC12150	MIRROR B	2	2	2
◉	8	2AC12170	WIRE,SCANNER	1	1	1
	9	2AC12180	ADJUSTING PLATE,SCANNER WIRE	2	2	2
	10	2AC12210	SHAFT,SCANNER DRIVE	1	1	1
◉	11	2AC12220	MOTOR,SCANNER	1	1	1
	12	2AC12240	COVER,INVERTER	1	1	1
	13	2AC12250	MOUNT,SCANNER MOTOR	1	1	1
	14	2AC12260	LIGHT SHIELD,PI	1	1	1
	15	2AC12270	GUIDE FFC1	1	1	1
	16	2AC12300	HOLDER FFC	2	2	2
	17	2AC12400	ADJUSTING PLATE B,MIRROR FRAME	1	1	1
	18	2AC27800	WIRE,SCANNER INVERTER	1	1	1
◉	19	2AC28120	INVERTER PCB	1	1	1
	20	29912420	HOLDER,WIRE ROPE	2	2	2
◉	21	33522100	BELT 117,VERTICAL CONVEYING	1	1	1
◉	22	33912150	PULLEY,WIRE	8	8	8
	23	34806150	STOPPER 5	1	1	1
◉	24	35912060	PULLEY,SCANNER DRUM	2	2	2
	25	35912210	SPRING,MIRROR HOLDER	2	2	2
◉	26	35912340	PULLEY,SCANNER DRIVE	1	1	1
	27	35912360	GUIDE FFC2	1	1	1
◉	28	28107400	BEARING,688ZZNR	2	2	2
	29	66012300	SLIDER,SCANNER	8	8	8
	30	72112520	TENSION SPRING,SCANNER WIRE	2	2	2
	31	75712080	MIRROR HOLDER	4	4	4
	32	29812291	CUSHION,CONTACT GLASS	9	9	9
◉	33	2AC12420	WIRE S,SCANNER	1	1	1
	34	2AC12440	GROUND PLATE,INVERTER	1	1	1

• Parts with "•" are component parts or sub-assemblies of the assembly appearing immediately above them.
• Parts with "◉" indicates the Service parts.

• Parts with "• •" are component parts or sub-assembly with "•" appearing immediately above them.

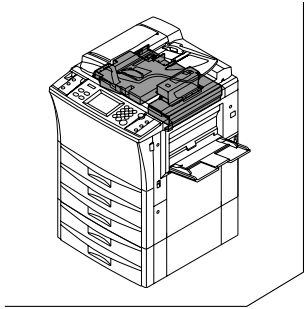

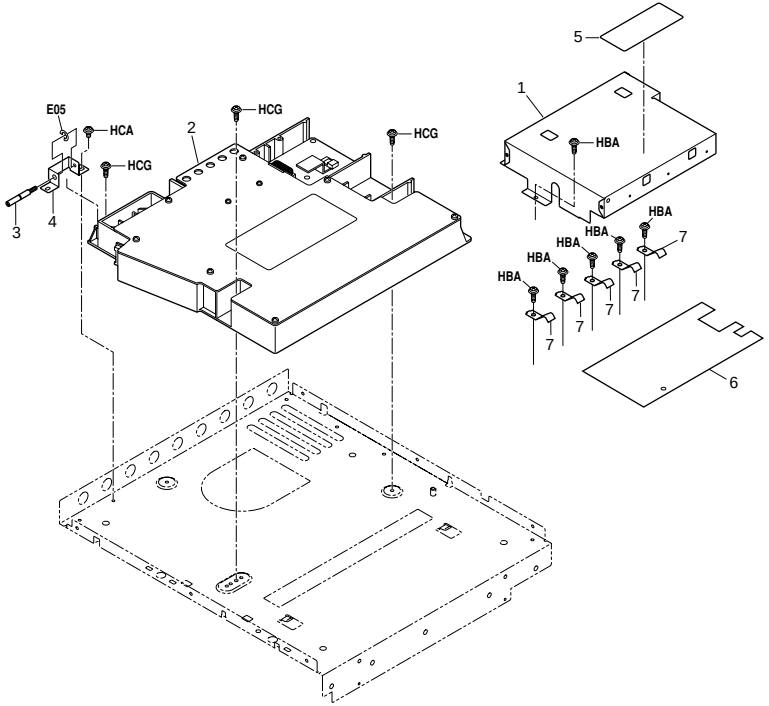
E05
HCA
HCG
HCG
HCG
2
3
4
5
1
HBA
HBA
HBA
HBA
HBA
HBA
7
7
7
7
7
7
6

FIG. 11 LASER SCANER UNIT

SP	Ref. No.	Part. No.	Description	Quantity		
				230V	240V	120V
	1	2A312010	COVER,ISU	1	1	1
◉	2	2AC13010	UNIT,LSU	1	1	1
	3	2AC13030	PIN,LSU ADJUSTMENT	1	1	1
	4	2AC13040	MOUNT,LSU ADJUSTMENT	1	1	1
	5	20305071	LABEL,CAUTION CONTACT GLASS	1	1	1
	6	2A312030	LID,SCANNER BASE	1	1	1
	7	36708090	GROUND PLATE,STAY DRUM	3	3	3

• Parts with "•" are component parts or sub-assemblies of the assembly appearing immediately above them.
• Parts with "◉" indicates the Service parts.

• Parts with "• •" are component parts or sub-assembly with "•" appearing immediately above them.

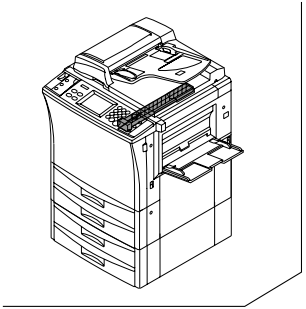

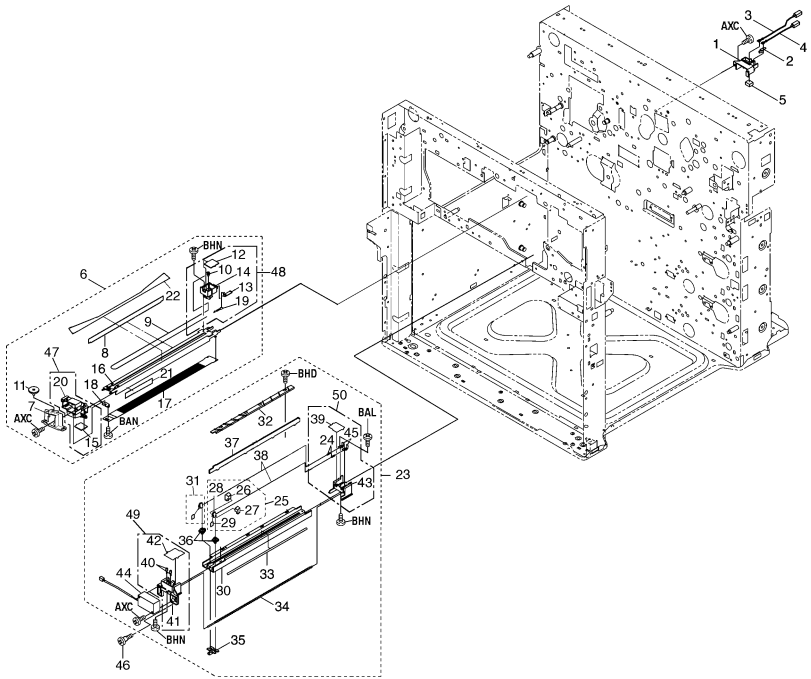
AXC
BHN
BHD
BAN
BAL
AXC
BHN
BHN
AXC
BHN

FIG. 12 IMAGE FORMATION SECTION

SP	Ref. No.	Part. No.	Description	Quantity 230V	240V	120V
◉	1	2AC10090	HOUSING,MC CONNECTOR	1	1	1
◉	2	2AC10210	TERMINAL,GRID CATCH	1	1	1
	3	2AC27810	WIRE,MAIN HIGH VOLTAGE	1	1	1
	4	2AC27820	WIRE,GRID	1	1	1
◉	5	2AC10190	TERMINAL,MC CONNECTOR	1	1	1
◉	6	2AC00101	MAIN CHARGER ASS'Y	1	1	1
◉	7	•2AC10180	HOLDER,MC ADJUSTMENT	1	1	1
	8	•2AC10200	SEAL,MC	1	1	1
◉	9	•42929503	TUNGSTEN WIRE(50M)	1	1	1
	10	•33910230	PIN,CHARGER	1	1	1
	11	•33918030	PIN,BLADE	1	1	1
◉	12	•2AC10080	REAR LID,MC HOUSING	1	1	1
◉	13	•2AC10060	TERMINAL,MC HOUSING	1	1	1
◉	14	•2AC10020	REAR HOUSING,MC	1	1	1
◉	15	•2AC10070	FRONT LID,MC HOUSING	1	1	1
◉	16	•2AC10030	SHIELD,MC	1	1	1
◉	17	•2AC10040	GRID	1	1	1
	18	•2AC10050	TENSION PLATE,GRID	1	1	1
	19	•48527200	SPRING,CHARGER	1	1	1
◉	20	•2AC10010	FRONT HOUSING,MC	1	1	1
	21	•2AC10220	UPPER SHIELD,MC	1	1	1
	22	•2AC10230	RIGHT SHIELD,MC	1	1	1
◉	23	2AC00220	TRANSFER CHARGER ASS'Y	1	1	1
◉	24	•48527200	SPRING,CHARGER	2	2	2
◉	25	•2AC00430	TRANSFER CLEANING ASS'Y	1	1	1
◉	26	••2AC17110	PAD A,SHIELD CLEANING	1	1	1
◉	27	••2AC17120	PAD B,SHIELD CLEANING	1	1	1
◉	28	••2AC17140	HOLDER,TRANSFER CLEANING	1	1	1
◉	29	••77616110	PAD TC CLEANING	2	2	2
◉	30	•2AC17010	SHIELD,TRANSFER	1	1	1
◉	31	•33900940	CLEANING PAD ASS'Y	1	1	1
◉	32	•2AC17090	GUIDE,SEPARATION	1	1	1
	33	•2AC17160	FILM,TRANSFER SHIELD	1	1	1
	34	•33917200	SPIRAL,CHARGER CLEANING	1	1	1
	35	•33917211	WORK PLATE,CLEANING SLIDER	1	1	1
	36	•33917230	SLIDER,TRANSFER CLEANING	2	2	2
◉	37	•2AC17150	PARTITION,TRANSFER SHIELD	1	1	1
◉	38	•74669000	TUNGSTEN WIRE(OX) S•P (50M)	1	1	1
◉	39	•33917080	REAR LID,TRANSFER	1	1	1
	40	•33910230	PIN,CHARGER	2	2	2
◉	41	•2AC17100	FRONT HOUSING,TRANSFER	1	1	1
◉	42	•33917260	FRONT LID,TRANSFER SHEET	1	1	1
◉	43	•2AC17040	REAR HOUSING,TRANSFER	1	1	1
◉	44	•2AC16190	UNIT,CLEANING MOTOR	1	1	1
◉	45	•2AC17060	TERMINAL,TRANSFER CHARGER	2	2	2
	46	•72518120	PIN,TANK RELEASE	1	1	1
◉	47	2AC94900	SET,FRONT MC HOUSING,SP	1	1	1
◉	48	2AC94910	SET,REAR MC HOUSING,SP	1	1	1
◉	49	2AC94920	SET,FRONT TRANSFER HOUSING,SP	1	1	1
◉	50	2AC94930	SET,REAR TRANSFER HOUSING,SP	1	1	1

• Parts with "•" are component parts or sub-assemblies of the assembly appearing immediately above them.
• Parts with "◉" indicates the Service parts.

• Parts with "• •" are component parts or sub-assembly with "•" appearing immediately above them.

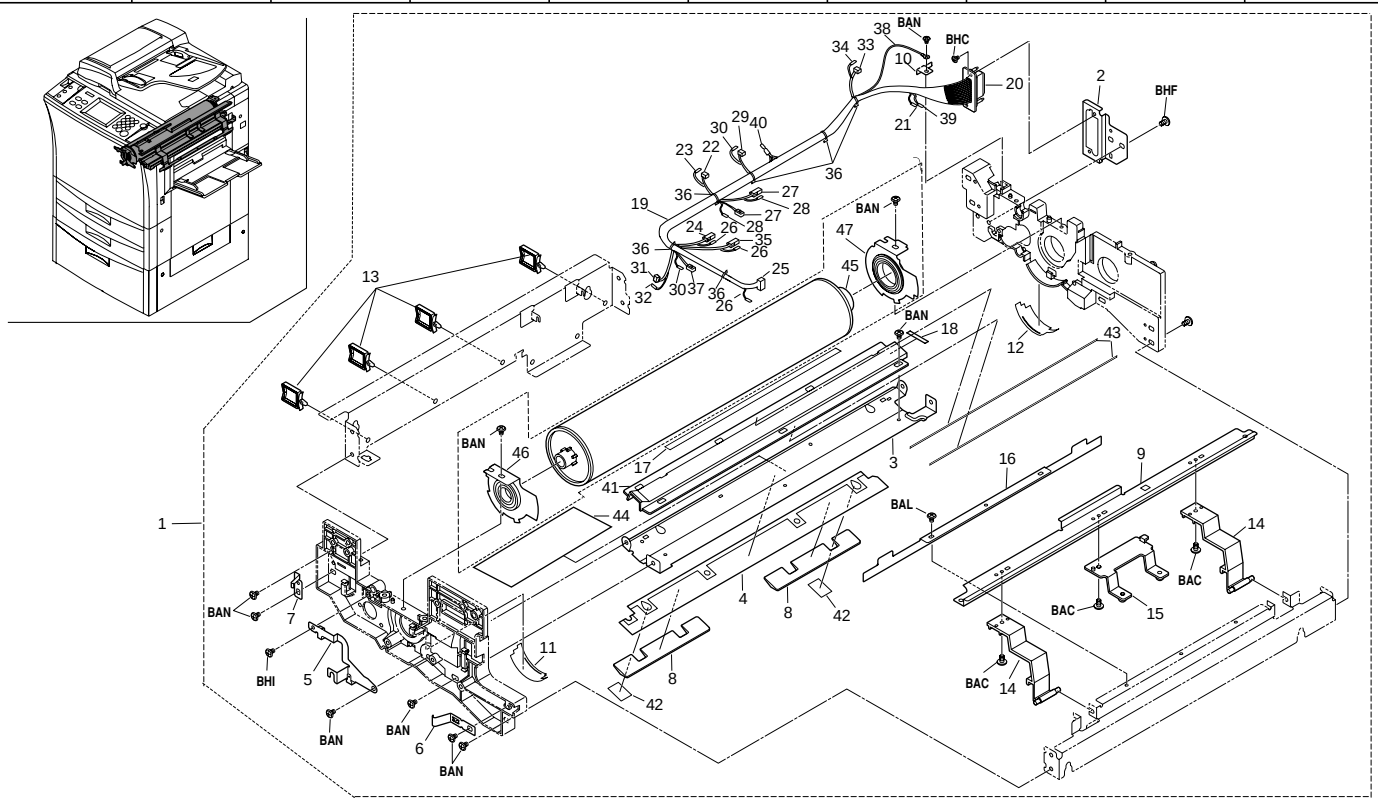
A B C D E F G H I J
1 2 3 4 5 6 7
BAN
BHC
BHF
BAL
BAC
BHI
1 2 3 4 5 6 7 8 9 10 11 12 13 14 15 16 17 18 19 20 21 22 23 24 25 26 27 28 29 30 31 32 33 34 35 36 37 38 39 40 41 42 43 44 45 46 47

FIG. 13 IMAGE UNIT

2A3/2A4

SP	Ref. No.	Part. No.	Description	Quantity 230V	240V	120V
	1	2AC93430	PARTS,IMAGE FORMATION ASS'Y SP	1	1	0
	1	2AC93450	PARTS,IMAGE FORMATION ASS'Y SP(USA)SP	0	0	1
	2	•2AC08100	MOUNT,IMAGE FORMATION DRAWER	1	1	1
	3	•2AC08110	LOWER GUIDE,IMAGE FORMATION	1	1	1
◉	4	•2AC08120	LOWER FILM,IMAGE FORMATION GUIDE	1	1	1
	5	•2AC08150	GROUND PLATE,IMAGE FORMATION UNIT	1	1	1
	6	•2AC08250	RIGHT GROUND PLATE,REINFORCEMENT	1	1	1
	7	•2AC08260	LEFT GROUND PLATE,REINFORCEMENT	1	1	1
	8	•2AC08280	FRONT GUIDE,TRANSFER CONVEYING	2	2	2
	9	•2AC14061	RAIL,IMAGE FORMATION	1	1	1
◉	10	•2AC14090	TERMINAL DB,CONNECTOR	1	1	1
◉	11	•2AC18350	FRONT GUIDE FILM,DRUM	1	1	1
◉	12	•2AC18360	REAR GUIDE FILM,DRUM	1	1	1
	13	•M2109060	LOCKING WIRE SADDLE,LWS-2NS	4	4	4
	14	•33914230	HOLDER,DEVELOPING	2	2	2
	15	•33914240	HOLDER,SUB HOPPER	1	1	1
	16	•33914250	PRESSING PLATE,DEVELOPING	1	1	1
	17	•2AC14590	LOWER GUIDE FILM,DEVELOPING DUCT	1	1	1
	18	•2AC14580	LOWER SPONGE B,DEVELOPING DUCT	1	1	1
	19	•2AC27570	WIRE,DRUM UNIT	1	1	1
	20	••J0413240	PLUG 24P,QR/P4-24P-C	1	1	1
	21	••J0410920	CONTACT,QR/P1-PC2A-111	20	20	20
	22	••J0070010	POSITIVE CONNECTOR,#187,172074-1	1	1	1
	23	••J0070900	POSITIVE CONTACTOR,#187,170330-1	1	1	1
	24	••J0453020	PLUG,DF3-2EP-2C(HIROSE)	1	1	1
	25	••J0452040	RECEPTACLE,DF3AA-4EP-2C(HIROSE)	1	1	1
	26	••J0452900	PIN,DF3-EP2428PC(HIROSE)	8	8	8
	27	••J0150030	RECEPTACLE,175778-3(AMP)	2	2	2
	28	••J0150900	CONTACTOR,175161-1(AMP)	6	6	6
	29	••J0241020	PLUG SM 2P,SMP-02V-BC	1	1	1
	30	••J0250910	SOCKET NH,BHF-001T-0.8BS	4	4	4
	31	••J0170010	PLUG,172335-1(AMP)	1	1	1
	32	••J0040900	SOCKET,MINI MATENLOCK,170366-1	1	1	1
	33	••J0424040	RECEPTACLE,DFIB-4S-2.5R(HIROSE)	1	1	1
	34	••J0421900	CONTACTOR,DF1B-2428SC(HIROSE)	4	4	4
	35	••J0453030	PLUG,DF3-3EP-2C(HIROSE)	1	1	1
	36	••M7107000	BAND,GT-100M(HUA WEI)	6	6	6
	37	••J0241030	PLUG SM 3P,SMP-03V-BC	1	1	1
	38	••L0223040	ROUND TYPE TERMINAL,SRA-21T-4,(REEL)	1	1	1
	39	••J0410920	CONTACT,QR/P1-PC2A-111	4	4	4
	40	••L4040000	CLOSE TYPE TERMINAL,0.5-1.75,CE-1	1	1	1
	41	•2AC14510	LOWER DUCT,DEVELOPING	1	1	1
◉	42	•2AC08300	LOWER SHIELD,IMAGE FORMATION GUIDE	2	2	2
	43	•2AC14570	LOWER SPONGE A,DEVELOPING DUCT	2	2	2
◉	44	•2AC06350	UPPER FILM,RESISTANCE GUIDE FILM	1	1	1
◉	45	2AC82030	DRUM FOR P.S.VI 400	1	1	0
◉	45	2AC82040	DRUM FOR P.S.AI 4040	0	0	1
	46	2AC08130	FRONT RETAINER,DRUM	1	1	1
	47	2AC08140	REAR RETAINER,DRUM	1	1	1

• Parts with "•" are component parts or sub-assemblies of the assembly appearing immediately above them.
• Parts with "◉" indicates the Service parts.

• Parts with "•• •" are component parts or sub-assembly with "••" appearing immediately above them.

FIG. 14 DEVELOPING SECTION

2A3/2A4

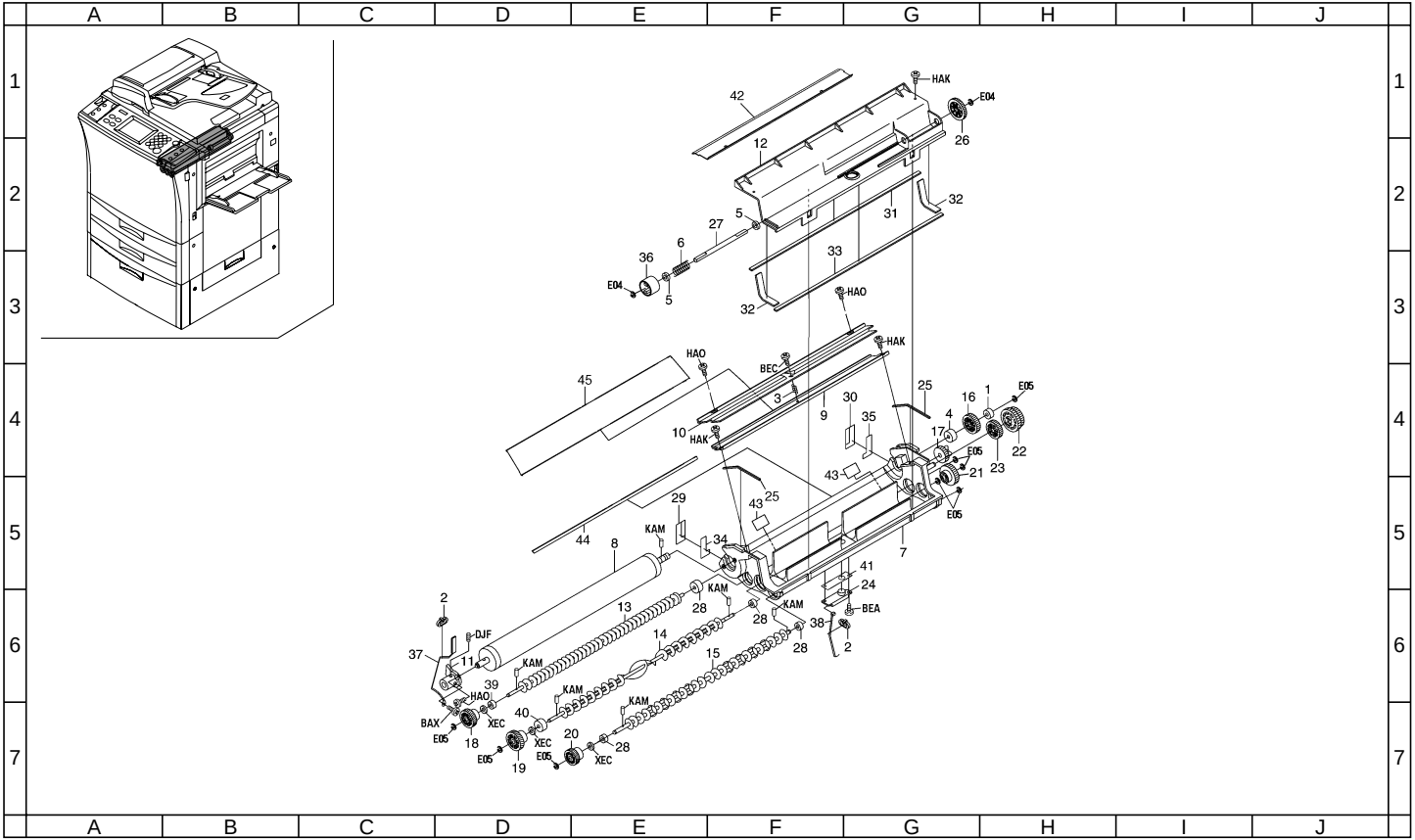

FIG. 14 DEVELOPING SECTION

SP	Ref. No.	Part. No.	Description	Quantity		
				230V	240V	120V
◉		2AC00120	DEVELOPING ASS'Y	1	1	1
◉	1	•G3006880	BEARING #688ZZ	1	1	1
	2	•M0207000	BINDING BAND,KB-100-1	2	2	2
	3	•2AC14150	SPRING,DOCTOR BLADE ADJUSTMENT	1	1	1
◉	4	•45528100	BUSHING 688ADD	1	1	1
◉	5	•29717230	BUSHING 6,FEED BACK	2	2	2
	6	•29806310	COIL SPRING,FRICTION	1	1	1
	7	•2AC14010	HOUSING,DEVELOPING	1	1	1
	8	•2AC14020	MAGNET,DEVELOPING	1	1	1
	9	•33914030	STAY,DOCTOR BLADE	1	1	1
	10	•33914040	REINFORCEMENT,DOCTOR BLADE ADJUSTMENT	1	1	1
◉	11	•2AC14050	FRONT BUSHING,SLEEVE	1	1	1
	12	•33914060	COVER,DEVELOPING	1	1	1
	13	•33914070	SPIRAL A,DEVELOPING	1	1	1
	14	•33914080	SPIRAL B,DEVELOPING	1	1	1
	15	•33914090	SPIRAL C,DEVELOP	1	1	1
◉	16	•33914110	GEAR,DEVELOPING SLEEVE	1	1	1
◉	17	•33914120	GEAR,DEVELOPING INPUT	1	1	1
◉	18	•33914130	GEAR A,SPIRAL	1	1	1
◉	19	•33914140	FRONT GEAR B,SPIRAL	1	1	1
◉	20	•33914150	GEAR C,SPIRAL	1	1	1
◉	21	•33914160	REAR GEAR B,SPIRAL	1	1	1
◉	22	•33914170	GEAR A,DEVELOPING IDLE	1	1	1
◉	23	•33914180	GEAR B,DEVELOPING IDLE	1	1	1
◉	24	•33914190	TONER SENSOR	1	1	1
◉	25	•33914200	SPONGE A,DEVELOPING	2	2	2
◉	26	•33914210	GEAR,TONER SUPPLY	1	1	1
	27	•33914220	SHAFT,TONER SUPPLY	1	1	1
◉	28	•75915090	BUSHING AGITATION ROTOR SHAFT	4	4	4
◉	29	•33914290	FRONT FILM,DEVELOPING	1	1	1
◉	30	•33914300	REAR FILM,DEVELOPING	1	1	1
◉	31	•33914310	SPONGE A,COVER DEVELOPING	1	1	1
◉	32	•33914320	SPONGE B,COVER DEVELOPING	2	2	2
◉	33	•33914330	SPONGE C,COVER DEVELOPING	1	1	1
◉	34	•33914340	FRONT SEAL,DEVELOPING UNIT	1	1	1
◉	35	•33914350	REAR SEAL,DEVELOPING UNIT	1	1	1
◉	36	•33914370	COUPLING,SUB HOPPER DRIVE	1	1	1
	37	•33927410	WIRE,DEVELOPING BIAS	1	1	1
	38	•2AC27690	WIRE,TONER SENSOR	1	1	1
◉	39	•71814100	BUSHING 6-21,MAIN UNIT	1	1	1
◉	40	•71814130	BUSHING 6-23,MAIN UNIT	1	1	1
	41	33914380	SPACER,TONER SENSOR	1	1	1
◉	42	2AC93011	PARTS UPPER SEAL DEVE.(SP)	1	1	1
◉	43	2AC08300	LOWER SHIELD,IMAGE FORMATION GUIDE	2	2	2
◉	44	2AC14160	LOWER FILM B,DEVELOPING	1	1	1
◉	45	2AC14170	FILM,DOCTOR BLADE STAY	1	1	1

• Parts with "•" are component parts or sub-assemblies of the assembly appearing immediately above them.
• Parts with "◉" indicates the Service parts.

• Parts with "• •" are component parts or sub-assembly with "•" appearing immediately above them.

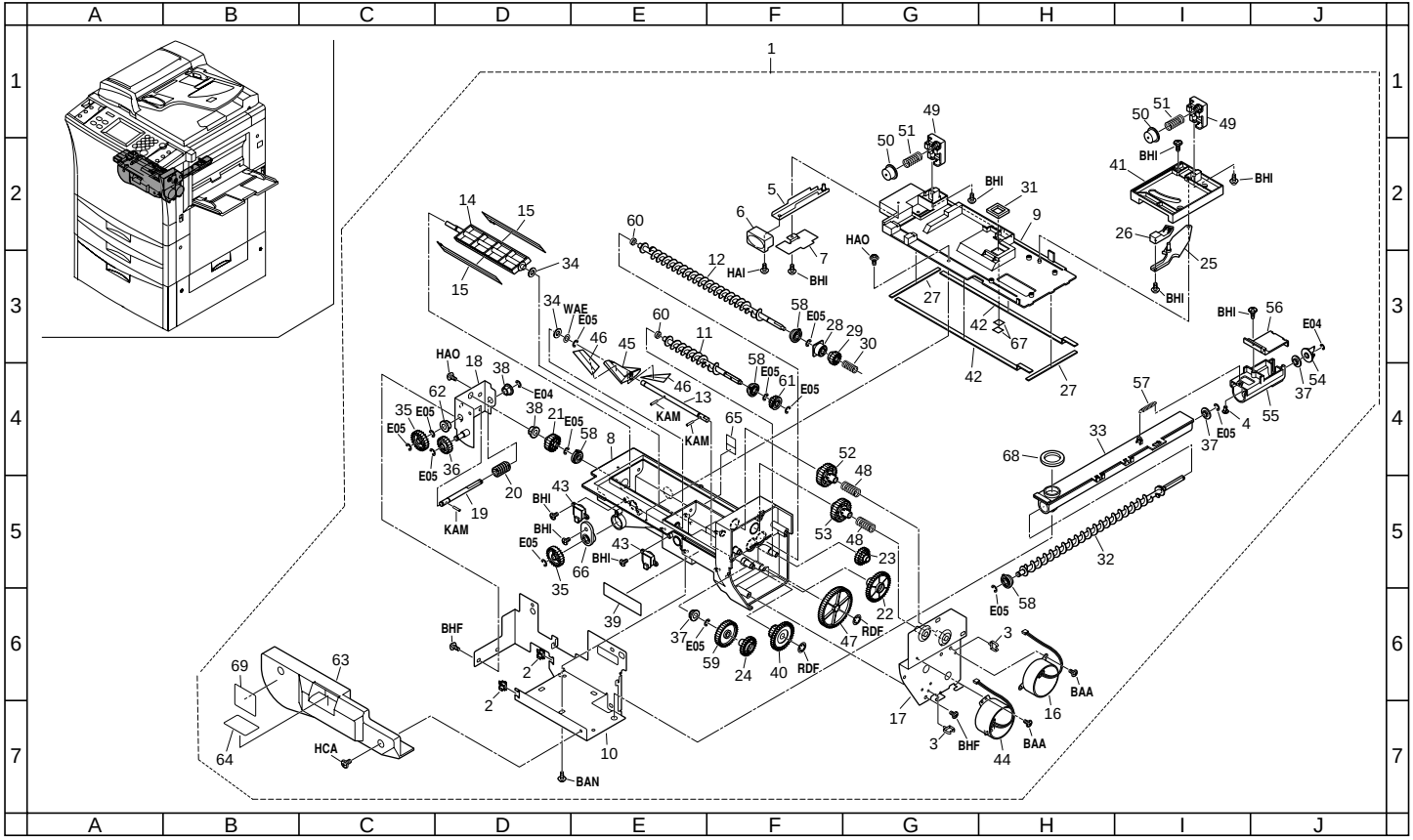
A B C D E F G H I J
1 2 3 4 5 6 7
1
2
3
4
5
6
7
8
9
10
11
12
13
14
15
16
17
18
19
20
21
22
23
24
25
26
27
28
29
30
31
32
33
34
35
36
37
38
39
40
41
42
43
44
45
46
47
48
49
50
51
52
53
54
55
56
57
58
59
60
61
62
63
64
65
66
67
68
69
BAA
BAN
BHF
BHI
E04
E05
HAI
HAO
HCA
KAM
RDF
WAE

FIG. 15 TONER HOPPER SECTION

2A3/2A4

SP	Ref. No.	Part. No.	Description	Quantity 230V	240V	120V
		2AC93430	PARTS,IMAGE FORMATION ASS'Y SP	1	1	0
		2AC93450	PARTS,IMAGE FORMATION ASS'Y SP(USA)SP	0	0	1
◉	1	•2AC00140	RECYCLE ASS'Y	0	0	1
◉	1	•2AC00370	RECYCLE ASS'Y B	1	1	1
	2	••M2104260	EDGING,EDS-0607U(KITAGAWA)	2	2	2
	3	••M2105710	MINIATURE CLAMP,UAMS-05-0	2	2	2
	4	••M2114010	NYLON RIVET,NRP-345(KITAGAWA)	1	1	1
	5	••2AC08220	WORK PLATE,HOOK	1	1	1
	6	••2AC08230	COVER,HOOK WORK	1	1	1
	7	••2AC08240	LID,HOOK WORK	1	1	1
	8	••2AC15011	HOUSING,RECYCLE	1	1	1
	9	••2AC15021	LID,RECYCLE	1	1	1
	10	••2AC15030	MOUNT,RECYCLE	1	1	1
	11	••2AC15040	SPIRAL,HOPPER	1	1	1
	12	••2AC15050	SPIRAL,RECYCLE	1	1	1
	13	••2AC15060	SHAFT,HOPPER PADDLE	1	1	1
	14	••2AC15070	PADDLE,RECYCLE	1	1	1
	15	••2AC15080	FILM,PADDLE	2	2	2
◉	16	••2AC15100	TONER MOTOR	1	1	1
	17	••2AC15110	MOUNT,TONER MOTOR	1	1	1
	18	••2AC15120	MOUNT,RECYCLE DRIVE	1	1	1
	19	••2AC15130	SHAFT,RECYCLE DRIVE	1	1	1
◉	20	••2AC15140	GEAR,RECYCLE DRIVE	1	1	1
◉	21	••2AC15150	GEAR 20,RECYCLE DRIVE	1	1	1
◉	22	••2AC15170	GEAR 40,RECYCLE	1	1	1
◉	23	••2AC15180	GEAR 14/22,RECYCLE	1	1	1
◉	24	••2AC15190	GEAR 25,RECYCLE	1	1	1
	25	••2AC15210	LEVER,CARTRIDGE DETACHING	1	1	1
	26	••2AC15220	HANDLE,CARTRIDGE DETACHING	1	1	1
	27	••2AC15230	SPONGE A,RECYCLE	2	2	2
◉	28	••2AC15280	COUPLING A,RECYCLE SPIRAL	1	1	0
◉	29	••2AC15290	COUPLING B,RECYCLE SPIRAL	1	1	0
◉	30	••2AC15300	SPRING,RECYCLE SPIRAL	1	1	1
	31	••2AC15310	SPONGE,RECYCLE HOPPER	1	1	1
	32	••2AC15530	SPIRAL,SUB HOPPER	1	1	1
	33	••2AC15540	HOUSING,SUB HOPPER	1	1	1
	34	••48827222	SEAL FELT B	2	2	2
◉	35	••45728105	GEAR 24,DEV.UNIT	2	2	2
◉	36	••45728111	IDLE GEAR 20,FIXING UNIT	1	1	1
◉	37	••49028116	BUSHING 6,CLEANING UNIT	3	3	3
◉	38	••29717230	BUSHING 6,FEED BACK	2	2	2
	39	••33905010	LABEL,TONER CARTRIDGE	1	1	1
◉	40	••33915090	GEAR,RECYCLE IDLE	1	1	1
	41	••33915120	LID,DETACHING LEVER	1	1	1
	42	••33915170	SPONGE B,RECYCLE	2	2	2
◉	43	••33915180	TONER EMPTY DETECTION SENSOR	2	2	2
◉	44	••18527270	TONER MOTOR	1	1	1
	45	••33915201	PADDLE A,RECYCLE	1	1	1
	46	••33915220	FILM A,PADDLE	2	2	2
◉	47	••33915240	GEAR,CARTRIDGE DRIVE IDLE	1	1	1
	48	••33915250	SPRING,CARTRIDGE DRIVE	2	2	2
	49	••33915270	RETAINER,CARTRIDGE PRESSURE	2	2	2
	50	••33915280	CAP,CARTRIDGE PRESSURE	2	2	2
	51	••33915290	SPRING,CARTRIDGE PRESSURE	2	2	2
◉	52	••33915330	GEAR C,CARTRIDGE DRIVE	1	1	0
◉	52	••33915100	GEAR A,CARTRIDGE DRIVE	0	0	1
◉	53	••33915340	GEAR D,CARTRIDGE DRIVE	1	1	0
◉	53	••33915110	GEAR B,CARTRIDGE DRIVE	0	0	1
◉	54	••33915540	COUPLING,SUB HOPPER	1	1	1
	55	••33915550	SHUTTER,SUB HOPPER	1	1	1
	56	••33915560	COVER,SUB HOPPER SHUTTER	1	1	1
	57	••33915570	SPRING,SUB HOPPER	1	1	1
◉	58	••65814400	FRONT BUSHING 15B,AGITATION	4	4	4
◉	59	••71814180	GEAR 35,MAIN UNIT MIXING	1	1	1
	60	••72919100	SEAL,RECYCLE SECTION	2	2	2
◉	61	••72920280	GEAR 16,EJECT	1	1	1
◉	62	••73210450	BUSH, 6	1	1	1
	63	••2AC15200	COVER,RECYCLE	1	1	1
	64	••2AC05090	LABEL,IMAGE FORMATION COVER	1	1	1
	65	••2AC15320	FILM,TONER PARTITION	1	1	1
◉	66	••33915310	FRONT BUSHING,CLEANING SPIRAL	1	1	1
	67	••2AC15340	SPONGE C,RECYCLE	2	2	2
	68	••2AC15330	SPONGE,SUB HOPPER	1	1	1
	69	••2AC05200	LABEL,IMAGE FORMATION CAUTION	1	1	1

• Parts with "•" are component parts or sub-assemblies of the assembly appearing immediately above them.
• Parts with "◉" indicates the Service parts.

• Parts with "• •" are component parts or sub-assembly with "•" appearing immediately above them.

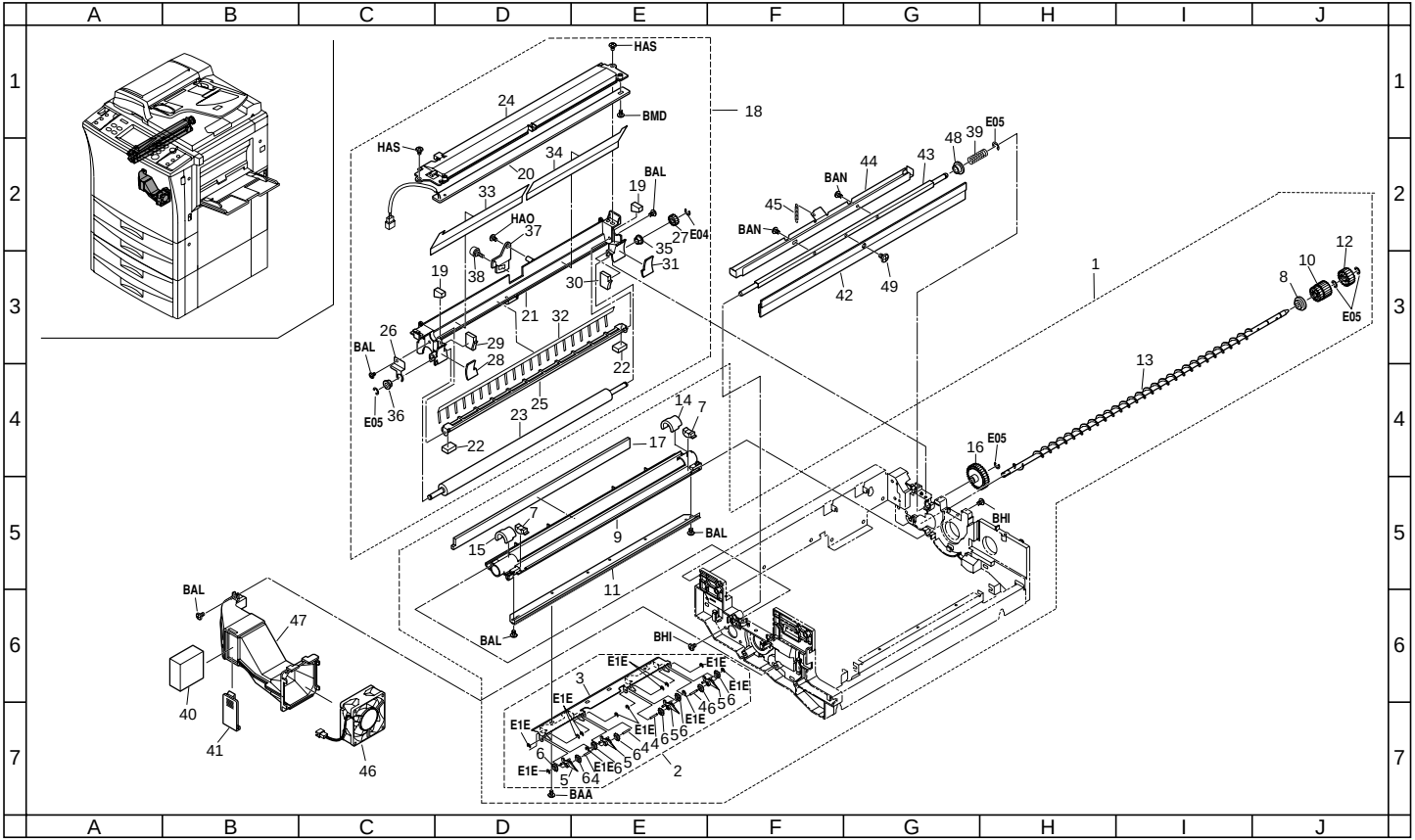
A B C D E F G H I J
1 2 3 4 5 6 7
HAS
BMD
HAS
24
18
34
20
33
19
BAL
HAO
37
38
35
27
E04
31
30
19
21
32
BAL
26
29
28
22
25
E05
36
23
22
14
7
17
7
15
9
BAL
11
BAL
BAL
47
40
41
46
BHI
E1E
3
E1E
E1E
6
5
64
E1E
6
5
E1E
4
46
5
6
E1E
E1E
E1E
46
56
E1E
E1E
2
BAA
BAN
44
43
48
39
E05
45
BAN
42
49
1
12
10
8
E05
13
16
E05
BHI

FIG. 16 CLEANING SECTION

SP	Ref. No.	Part. No.	Description	Quantity 230V	240V	120V
	1	2AC93430	PARTS,IMAGE FORMATION ASS'Y SP	1	1	0
	1	2AC93450	PARTS,IMAGE FORMATION ASS'Y SP(USA)SP	0	0	1
◉	2	•2AC00450	SEPARATION CLAW ASS'Y	1	1	1
	3	••2AC18330	LOWER MOUNT,SEPARATION CLAW	1	1	1
	4	••62218040	SHAFT,SEPARATION CLAW	4	4	4
◉	5	••62218011	SEPARATION CLAW	4	4	4
◉	6	••62218020	RATCHET,SEPARATION	8	8	8
◉	7	•2AC18182	SPONGE,GUIDE BRUSH	2	2	2
◉	8	•33918130	BUSHING,SPIRAL	1	1	1
	9	•2AC18021	STAY,CLEANING	1	1	1
◉	10	•2AC18290	GEAR 24/20,SPIRAL	1	1	1
◉	11	•2AC18050	MOUNT,SEPARATION CLAW	1	1	1
◉	12	•2AC18280	GEAR 20,SPIRAL	1	1	1
	13	•2AC18030	SPIRAL,CLEANING	1	1	1
	14	•2AC18240	REAR SPONGE,CLEANING HOUSING	1	1	1
	15	•2AC18230	FRONT SPONGE,CLEANING STAY	1	1	1
◉	16	•2AC18120	GEAR 34,THRUST CAM	1	1	1
◉	17	•2AC18210	SPONGE,CLEANING STAY	1	1	1
◉	18	2AC68280	CLEANING ASS'Y SP	1	1	1
◉	19	•2AC18170	UPPER SPONGE,BLADE SIDE	2	2	2
◉	20	•18510020	LAMP,CLEANING	1	1	1
◉	21	•2AC18010	HOUSING,CLEANING	1	1	1
	22	•2AC18220	SPONGE,SCRAPER	2	2	2
◉	23	•2AC93020	PARTS BRUSH CLEANING(SP)	1	1	1
◉	24	•2AC18060	UPPER COVER,CLEANING	1	1	1
	25	•2AC18070	SCRAPER,BRUSH	1	1	1
◉	26	•2AC18080	GROUND PLATE,CLEANING	1	1	1
	27	•2AC18100	GEAR 15,FUR BRUSH	1	1	1
◉	28	•2AC18140	FRONT SEAL,BLADE SIDE	1	1	1
◉	29	•2AC18310	FRONT SPONGE,BLADE SIDE	1	1	1
◉	30	•2AC18320	REAR SPONGE,BLADE SIDE	1	1	1
◉	31	•2AC18150	REAR SEAL,BLADE SIDE	1	1	1
◉	32	•2AC18380	SCRAPER,SPIRAL	1	1	1
◉	33	•2AC18390	FRONT FILM,IMAGE FORMATION	1	1	1
◉	34	•2AC18400	REAR FILM,IMAGE FORMATION	1	1	1
◉	35	•29717230	BUSHING 6,FEED BACK	1	1	1
◉	36	•73210450	BUSH, 6	1	1	1
◉	37	•33918270	LEVER,BLADE RELEASE	1	1	1
	38	•74315200	PIN,TONER HOPPER	1	1	1
◉	40	33918260	SPRING,THRUST	1	1	1
◉	41	2AC14560	FILTER,DEVELOPING DUCT	1	1	1
	42	2AC14520	LID,DEVELOPING DUCT	1	1	1
◉	43	2AC93030	PARTS BLADE CLEANING(SP)	1	1	1
	44	2AC18260	SHAFT,CLEANING BLADE	1	1	1
	45	2AC18270	PRESSING PLATE,CLEANING BLADE	1	1	1
◉	46	2AC18300	SPRING,CLEANING	1	1	1
◉	47	34927070	FAN,COOLING	1	1	1
	48	2AC14140	DUCT,DEVELOPING	1	1	1
◉	49	29822140	BUSHING,DRUM SHAFT	1	1	1
	50	29820110	FRONT PIN,FULCRUM	1	1	1

• Parts with "•" are component parts or sub-assemblies of the assembly appearing immediately above them.
• Parts with "◉" indicates the Service parts.

• Parts with "• •" are component parts or sub-assembly with "•" appearing immediately above them.

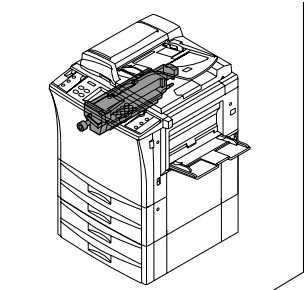

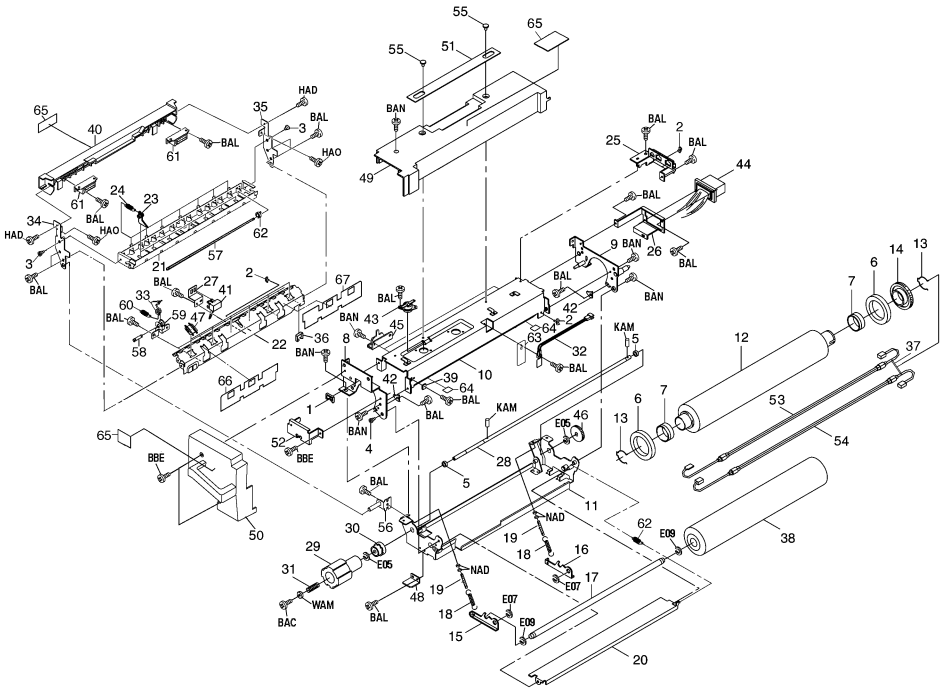
65
40
61
BAL
35
HAD
3
BAL
HAO
55
51
65
55
BAN
49
BAL
2
BAL
25
44
BAL
24
23
61
BAL
HAO
62
34
HAD
3
BAL
21
57
9
BAN
26
BAL
BAN
2
27
41
67
BAL
33
60
BAL
59
47
58
22
66
BAL
BAN
43
45
42
2
64
63
KAM
5
32
BAL
BAN
36
8
42
39
64
BAL
10
1
BAN
4
52
BBE
65
BBE
50
BAL
KAM
E05
46
28
5
11
NAD
19
18
16
E07
17
62
E09
38
30
56
29
E05
31
WAM
BAC
48
NAD
19
18
E07
E09
15
BAL
20
7
6
14
13
12
37
53
54
13
6
7

FIG. 17 FIXING SECTION

2A3/2A4

SP	Ref. No.	Part. No.	Description	Quantity		
				230V	240V	120V
		2AC00362	FIXING ASS'Y(230)	1	1	0
		2AC00232	FIXING ASS'Y(120)	0	0	1
	1	•M2104210	EDGING,EDS-2	1	1	1
	2	•M2105720	MINIATURE CLAMP,UAMS-05-2	3	3	3
	3	•48128107	PIN,CLEANING BLADE	2	2	2
	4	•48129208	PIN,TENSION	1	1	1
◉	5	•29806810	BUSHING,6 REGISTRATION	2	2	2
◉	6	•33420210	BEARING,HEAT ROLLER	2	2	2
◉	7	•33420220	BUSHING,HEAT ROLLER	2	2	2
	8	•33920010	FRONT FRAME,FIXING	1	1	1
	9	•33920020	REAR FRAME,FIXING	1	1	1
	10	•33920031	STAY,FIXING	1	1	1
	11	•2AC20050	BASE,FIXING	1	1	1
◉	12	•2AC20370	ROLLER,HEAT	1	1	1
	13	•D2002600	STOP RING S-26	2	2	2
◉	14	•33920140	GEAR,HEAT ROLLER	1	1	1
	15	•33920150	FRONT PRESSING PLATE,FIXING	1	1	1
	16	•33920160	REAR PRESSING PLATE,FIXING	1	1	1
	17	•33920170	SHAFT,PRESSURE ROLLER	1	1	1
◉	18	•33920180	SPRING,PRESSURE	2	2	2
	19	•33920190	BOLT,PRESSURE	2	2	2
	20	•33920210	FRONT GUIDE,FIXING	1	1	1
	21	•33920701	UPPER GUIDE B,FIXING	1	1	1
	22	•2AC20081	LOWER LEFT GUIDE,FIXING	1	1	1
◉	23	•2AC20390	CLAW,SEPARATION	7	7	7
◉	24	•33920250	SPRING,SEPARATION CLAW	7	7	7
	25	•33920270	REAR SUPPORT PLATE,HEATER	1	1	1
	26	•33920280	MOUNT,FIXING DRAWER	1	1	1
	27	•33920760	MOUNT B,FIXING SWITCH	1	1	1
	28	•33920300	SHAFT,FIXING DRIVE	1	1	1
	29	•33920310	DIAL,FIXING DRIVE	1	1	1
◉	30	•33920320	JOINT,FIXING DRIVE	1	1	1
◉	31	•33920330	SPRING,FIXING DRIVE	1	1	1
	32	•33920340	THERMISTER,FIXING	1	1	1
◉	33	•34820240	SEPARATION CLAW,PRESS ROLLER	4	4	4
	34	•2AC20020	FRONT FRAME,FIXING GUIDE	1	1	1
	35	•2AC20030	REAR FRAME,FIXING GUIDE	1	1	1
	36	•M2104200	EDGING EDS-1	1	1	1
	37	•M2107120	BINDING BAND SG-130	1	1	1
◉	38	•2AC20380	PRESS ROLLER	1	1	1
	39	•72420200	STATIC BRUSH	1	1	1
	40	•2AC20010	LEFT COVER,FIXING	1	1	1
◉	41	•33920560	SWITCH,FIXING	1	1	1
	42	•33920580	STOPPER,HEAT ROLLER	2	2	2
◉	43	•33920600	THERMOSTAT 140,FIXING	1	1	1
	44	•2AC27930	WIRE,FIXING	1	1	1
	45	•2AC20060	LEFT RETAINER,FIXING COVER	2	2	2
◉	46	•66022131	GEAR 30,DEVELOPING DRIVE	1	1	1
	47	•2AC20090	PROTECTING PLATE,FIXING SEPARATION CLAW	6	6	6
	48	•2AC20140	STOPPER,FIXING UNIT RELEASE	1	1	1
	49	•33920070	COVER,FIXING	1	1	1
	50	•2AC20040	FRONT COVER,FIXING	1	1	1
	51	•2AC20160	HANDLE,FIXING	1	1	1
	52	•33920260	FRONT SUPPORT PLATE,HEATER	1	1	1
◉	53	•2AC20330	HEATER MU,FIXING(220 - 240)	1	1	0
◉	53	•2AC20320	HEATER MU,FIXING (120)	0	0	1
◉	54	•2AC20360	HEATER SU,FIXING(220 - 240)	1	1	0
◉	54	•2AC20350	HEATER SU,FIXING(120)	0	0	1
	55	•33920570	PIN,FIXING COVER	2	2	2
	56	•2AC20240	LEFT FULCRUM PIN,FIXING GUIDE	1	1	1
	57	•33920711	SHAFT,SEPARATION CLAW	1	1	1
	58	•33920750	SHAFT,SEPARATION CLAW PRESS ROLLER	4	4	4
	59	•33920780	MOUNT B,PRESS ROLLER SEPARATION CLAW	4	4	4
◉	60	•33920790	SPRING,SEPARATION CLAW PRESS ROLLER	4	4	5
	61	•60804120	MAGNET CATCH	2	2	2
	62	•78620710	CLAW STOPPER	1	1	1
◉	63	•2AC20200	FILM,FIXING THERMISTOR	1	1	1
	64	•2AC20210	UPPER GUIDE FILM,FIXING	2	2	2
	65	2AC05110	LABEL L,HIGH TEMPERATURE CAUTION(EUR)	2	0	0
	65	20305130	LABEL L,HIGH TEMPERATURE CAUTION(EXP)	0	2	2
	66	2AC05120	LABEL S,HIGH TEMPERATURE CAUTION(EUR)	1	0	0
	66	20305080	LABEL,HIGH TEMPERATURE CAUTION(EXP)	0	1	1
◉	67	2AC20231	FRONT LEFT SHEET,FIXING	1	1	1
◉	68	2AC20251	REAR LEFT SHEET,FIXING	1	1	1

• Parts with "•" are component parts or sub-assemblies of the assembly appearing immediately above them.
• Parts with "◉" indicates the Service parts.

• Parts with "• •" are component parts or sub-assembly with "•" appearing immediately above them.

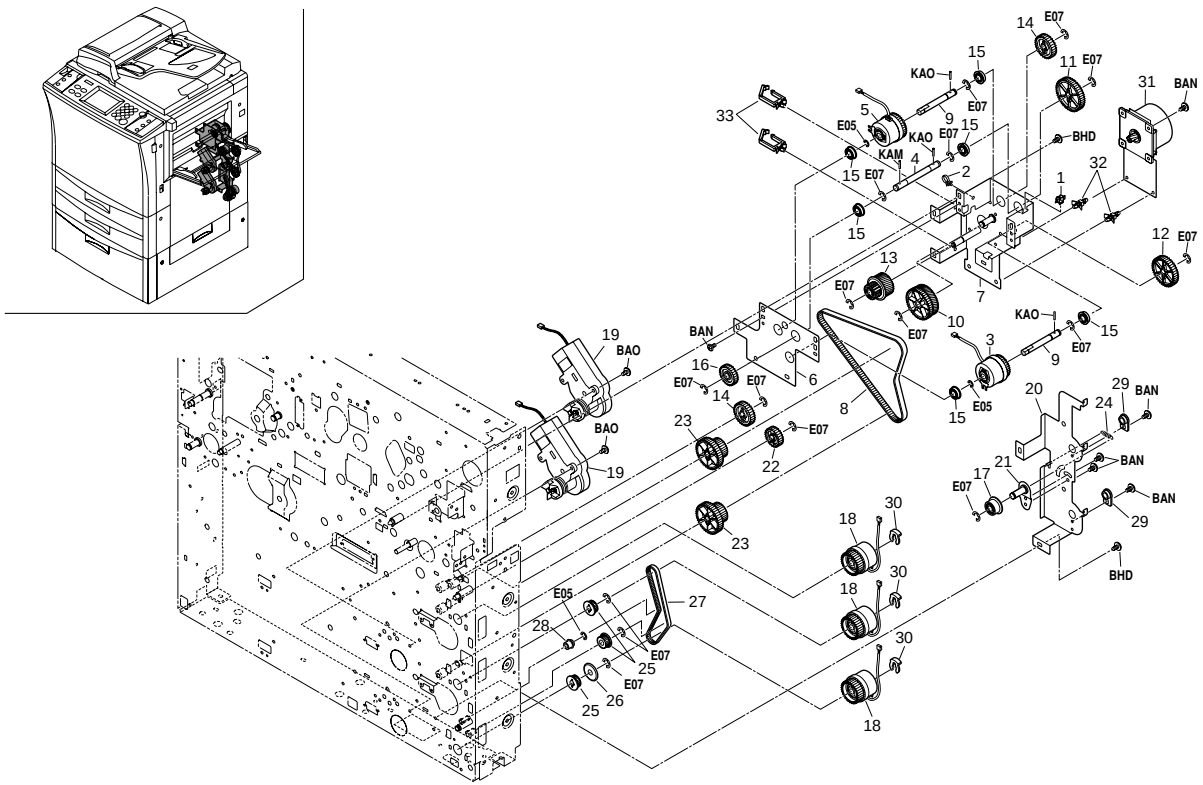
A B C D E F G H I J
1 2 3 4 5 6 7
E07
KAO
BAN
BHD
E05
KAM
BAO

FIG. 18 DRIVING, COOLING SECTION I

SP	Ref. No.	Part. No.	Description	Quantity		
				230V	240V	120V
	1	M2104260	EDGING,EDS-0607U(KITAGAWA)	1	1	1
	2	M2107120	BINDING BAND SG-130	1	1	1
◉	3	2AC06260	CLUTCH 32,FEED	1	1	1
	4	2AC22140	SHAFT,FEED DRIVE	1	1	1
◉	5	2AC22170	CLUTCH 35,FEED	1	1	1
	6	2AC22180	MOUNT,FEED SHIFT DRIVE	1	1	1
	7	2AC22190	RETAINER,FEED SHIFT DRIVE	1	1	1
◉	8	2AC22290	BELT,PAPER FEED DRIVE	1	1	1
	9	2AC22430	SHAFT,FEED CLUTCH	2	2	2
◉	10	2AC22440	GEAR 55/45,FEED	1	1	1
◉	11	2AC22450	GEAR 47,FEED	1	1	1
◉	12	2AC22460	GEAR 40,FEED	1	1	1
◉	13	2AC22470	GEAR 38/23,PAPER FEED DRIVE	1	1	1
◉	14	33922330	GEAR 30,IDLE	2	2	2
◉	15	60912270	BEARING,688ZZ	6	6	6
◉	16	67322180	GEAR 28,IDLE DRIVE	1	1	1
◉	17	74322350	PULLEY,DRIVE TENSION	1	1	1
◉	18	2AC06240	CLUTCH,PAPER FEED	3	3	3
◉	19	2AC06250	MOTOR,LIFT CASSETTE	2	2	2
	20	2AC22100	RETAINER,PAPER FEED DRIVE	1	1	1
	21	2AC22280	TENSION PLATE B,PAPER FEED DRIVE	1	1	1
◉	22	45727303	GEAR 26,CLUTCH	1	1	1
◉	23	33922241	PULLEY 31/42,IDLE	2	2	2
◉	24	78507090	SPRING,PF LOOP PAD	1	1	1
◉	25	72622130	UPPER PULLEY,CENTRAL LEAD ROLLER	3	3	3
◉	26	72407330	PULLEY,PF GEAR 30	1	1	1
◉	27	60922220	LOWER BELT,PAPER FEED	1	1	1
◉	28	66015270	PULLEY 10,TONER RECYCLE	1	1	1
◉	29	74718091	BUSHING CLEANING UNIT	2	2	2
	30	34806140	STOPPER 4	3	3	3
◉	31	2AC22520	MOTOR,PAPER FEED	1	1	1
	32	M2108120	SPACER,KGLS-4S	2	2	2
	33	M2109300	WIRE SADDLE,LWS-8SL-2.5W(KITAGAWA)	2	2	2

• Parts with "•" are component parts or sub-assemblies of the assembly appearing immediately above them.
• Parts with "◉" indicates the Service parts.

• Parts with "• •" are component parts or sub-assembly with "•" appearing immediately above them.

FIG. 19 DRIVING, COOLING SECTION II

2A3/2A4

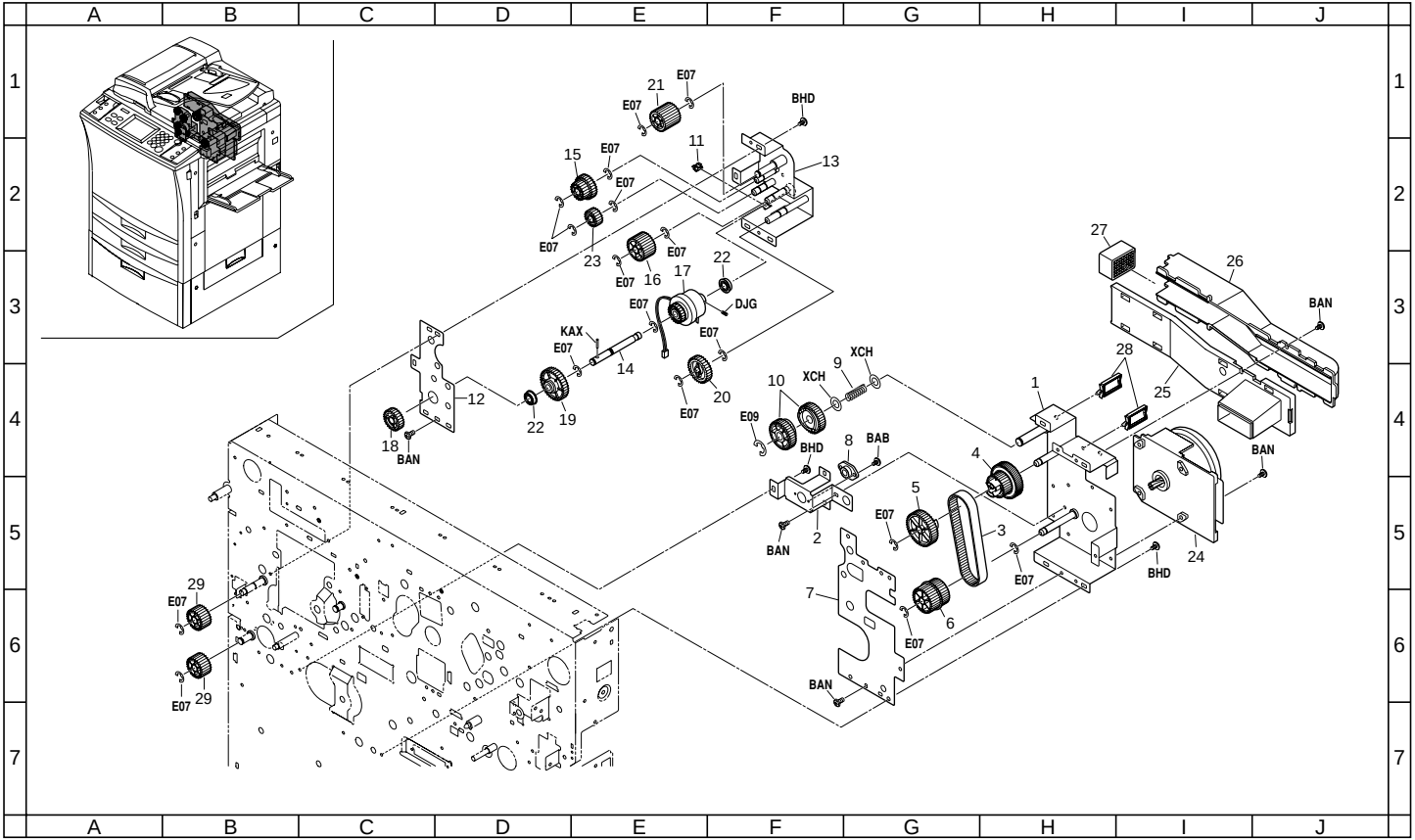

FIG. 19 DRIVING, COOLING SECTION II

SP	Ref. No.	Part. No.	Description	Quantity		
				230V	240V	120V
	1	2AC22110	RETAINER,FIXING DRIVE	1	1	1
	2	2AC22120	HOLDER,DUPLEX DRIVE	1	1	1
◉	3	2AC22300	BELT,FIXING DRIVE	1	1	1
◉	4	2AC22380	GEAR 63/32,FIXING	1	1	1
◉	5	2AC22390	GEAR 43,DUPLEX	1	1	1
◉	6	2AC22400	PULLEY 36/32,FIXING	1	1	1
	7	2AC22420	MOUNT,FIXING DRIVE	1	1	1
◉	8	33922470	BUSHING,DUPLEX DRIVE	1	1	1
◉	9	66222180	SPRING,DRUM DRIVE	1	1	1
◉	10	68322050	GEAR 36,FIXING DRIVE	2	2	2
	11	M2104260	EDGING,EDS-0607U(KITAGAWA)	1	1	1
	12	2AC22240	MOUNT,EJECT SHIFT DRIVE	1	1	1
	13	2AC22250	RETAINER,EJECT SHIFT DRIVE	1	1	1
	14	2AC22260	SHAFT,EJECT DRIVE	1	1	1
◉	15	2AC22270	GEAR 20/28,EJECT	1	1	1
◉	16	2AC22370	GEAR 29	1	1	1
◉	17	2AC22510	CLUTCH,EJECT SHIFT	1	1	1
◉	18	45727303	GEAR 26,CLUTCH	1	1	1
◉	19	45729301	GEAR,ONE WAY DRIVE	1	1	1
◉	20	33922330	GEAR 30,IDLE	1	1	1
◉	21	36722540	GEAR 26,IDLE	1	1	1
◉	22	60912270	BEARING,688ZZ	2	2	2
◉	23	67822450	GEAR 20,IDLE	1	1	1
◉	24	2AC22500	MOTOR,MAIN	1	1	1
	25	2AC16150	DUCT B,CONVEYING	1	1	1
	26	2AC16160	DUCT C,CONVEYING	1	1	1
◉	27	2AC16170	FILTER A,OZONE	1	1	1
	28	M2109030	WIRE SADDLE,WS-3NS	2	2	2
◉	29	33921140	GEAR 26,EJECT DRIVE	2	2	2

• Parts with "•" are component parts or sub-assemblies of the assembly appearing immediately above them.
• Parts with "◉" indicates the Service parts.

• Parts with "• •" are component parts or sub-assembly with "•" appearing immediately above them.

FIG. 20 DRIVING, COOLING SECTION III

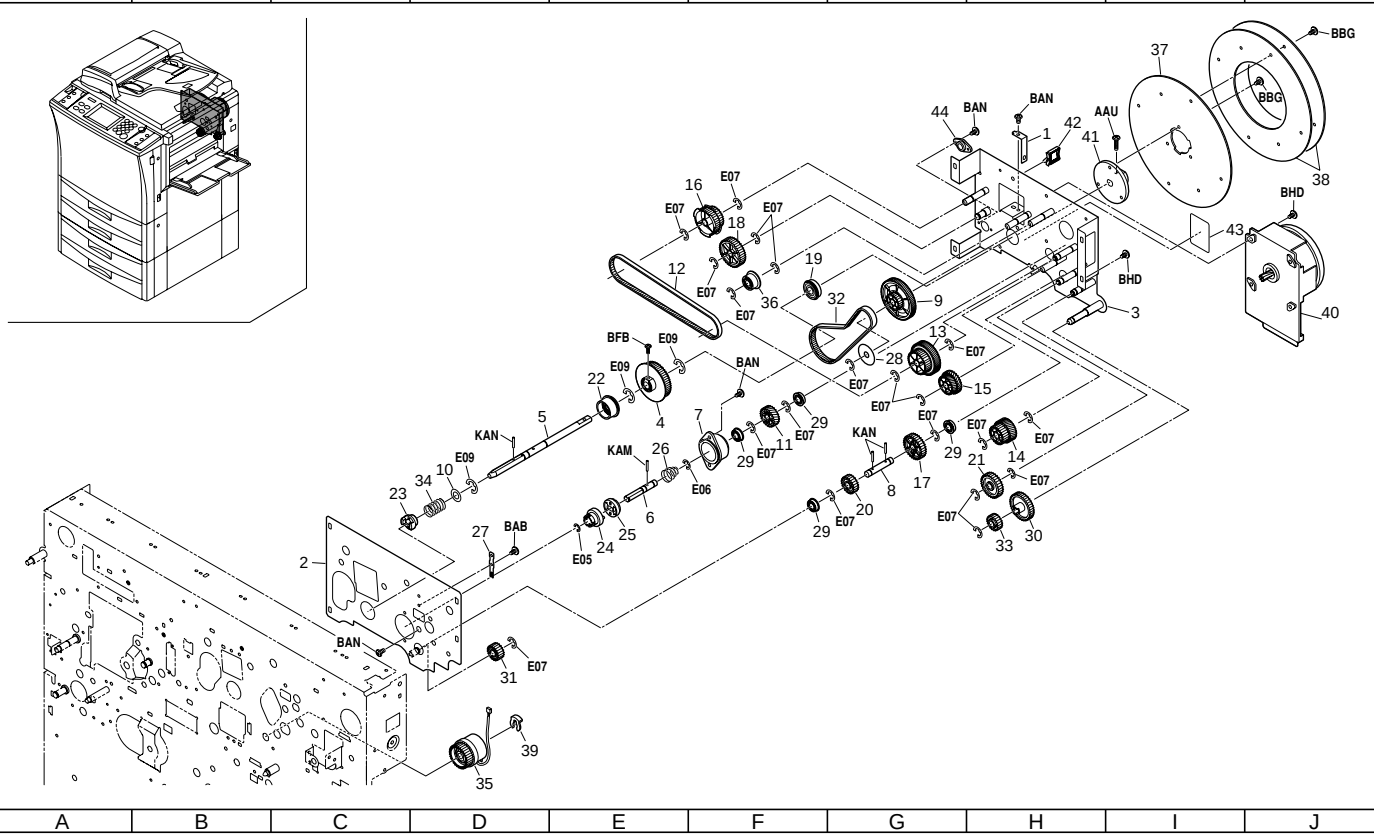

FIG. 20 DRIVING, COOLING SECTION III

SP	Ref. No.	Part. No.	Description	Quantity		
				230V	240V	120V
	1	2AC08160	GROUND PLATE,DRUM DRIVE	1	1	1
	2	2AC22010	MOUNT,IMAGE FORMATION DRIVE	1	1	1
	3	2AC22020	RETAINER,IMAGE FORMATION DRIVE	1	1	1
◉	4	2AC22030	PULLEY 54,DRUM	1	1	1
	5	2AC22040	SHAFT,DRUM DRIVE	1	1	1
	6	2AC22050	SHAFT,DEVELOPING DRIVE	1	1	1
	7	2AC22060	MOUNT BASE,DEVELOPING DRIVE	1	1	1
	8	2AC22070	SHAFT,REGISTRATION DRIVE	1	1	1
◉	9	2AC22090	PULLEY 26/80,DRUM DRIVE	1	1	1
	10	2AC22360	COLLAR,DRUM SHAFT	1	1	1
◉	11	2AC22410	GEAR 24,IMAGE FORMATION	1	1	1
◉	12	2AC22480	BELT,CLEANING DRIVE	1	1	1
◉	13	2AC22490	GEAR 63/35,DRUM	1	1	1
◉	14	2AC22600	GEAR 39/25,BYPASS	1	1	1
◉	15	2AC22610	GEAR 35/29,DEVELOPING	1	1	1
◉	16	2AC22620	PULLEY 40/28,CLEANING DRIVE	1	1	1
◉	17	2AC22630	GEAR 31,RESISTRATION	1	1	1
◉	18	2AC22640	GEAR 38,CLEANING	1	1	1
◉	19	45569005	CENTRAL BEARING	1	1	1
◉	20	29721040	GEAR,24 SB	1	1	1
◉	21	33922330	GEAR 30,IDLE	1	1	1
◉	22	33922370	BUSHING,DRUM DRIVE	1	1	1
◉	23	33922380	COUPLING,DRUM DRIVE	1	1	1
◉	24	33922390	COUPLING,DEVELOPING DRIVE	1	1	1
◉	25	33922400	JOINT,DEVELOPING DRIVE	1	1	1
◉	26	33922460	SPRING,DEVELOPING DRIVE	1	1	1
◉	27	34817260	TERMINAL,TRANSFER CONNECTOR	1	1	1
	28	36723590	FLANGE 30,BELT	1	1	1
◉	29	60912270	BEARING,688ZZ	4	4	4
◉	30	61722070	GEAR A,DUPLEX IDLE	1	1	1
◉	31	67822450	GEAR 20,IDLE	1	1	1
◉	32	69322010	BELT,EJECT DRIVE	1	1	1
◉	33	71807200	GEAR 20,REFEED PULLEY	1	1	1
◉	34	74722290	SPRING DRUM DRIVE COUPLER	1	1	1
◉	35	2AC06230	CLUTCH,RESISTRATION	1	1	1
◉	36	74322350	PULLEY,DRIVE TENSION	1	1	1
	37	34022050	FLYWHEEL A	1	1	1
	38	34022060	FLYWHEEL B	2	2	2
	39	34806140	STOPPER 4	1	1	1
◉	40	2AC22500	MOTOR,MAIN	1	1	1
	41	18522330	RETAINER,FLYWHEEL	1	1	1
	42	M2109010	WIRE SADDLE,WS-2NS	1	1	1
	43	2AG05200	LABEL,HIGH VOLTAGE CAUTION(EXP)	1	1	1
◉	44	34909030	FRONT BUSHING,DRUM SHAFT	1	1	1

• Parts with "•" are component parts or sub-assemblies of the assembly appearing immediately above them.
• Parts with "◉" indicates the Service parts.

• Parts with "• •" are component parts or sub-assembly with "•" appearing immediately above them.

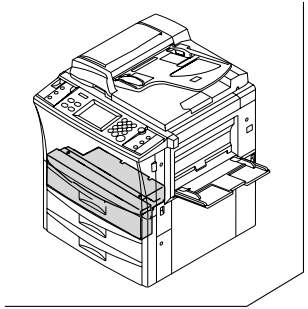

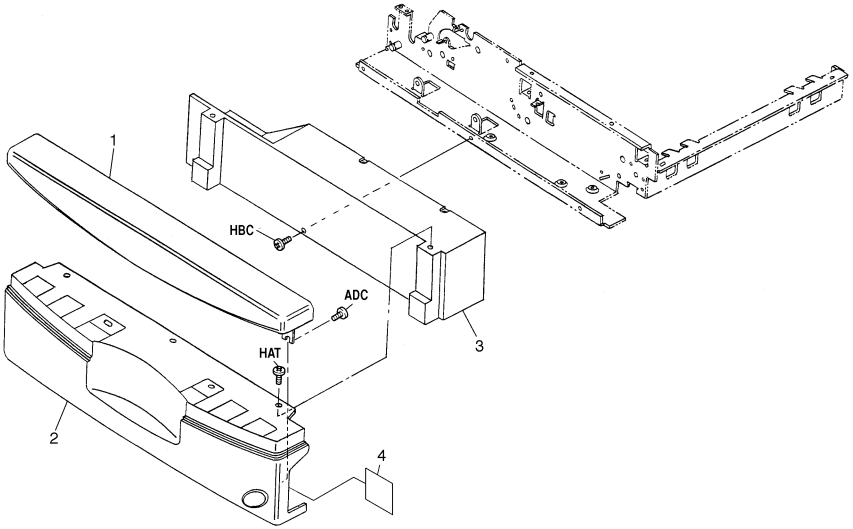
1
HBC
ADC
HAT
3
2
4

FIG. 21 DUPLEX UNIT I (KM-4230)

SP	Ref. No.	Part. No.	Description	Quantity		
				230V	240V	120V
◉	1	68204190	UPPER COVER,CASSETTE(K M)	1	1	1
◉	2	68204200	LOWER COVER,CASSETTE(K M)	1	1	1
	3	68721690	COVER,DUPLEX UNIT	1	1	1
◉	4	68205100	LABEL,CASSETTE SIZE(METRIC K M)	1	1	0
◉	4	68205110	LABEL,CASSETTE SIZE(INCH K M)	0	0	1

• Parts with "•" are component parts or sub-assemblies of the assembly appearing immediately above them.
• Parts with "◉" indicates the Service parts.

• Parts with "• •" are component parts or sub-assembly with "•" appearing immediately above them.

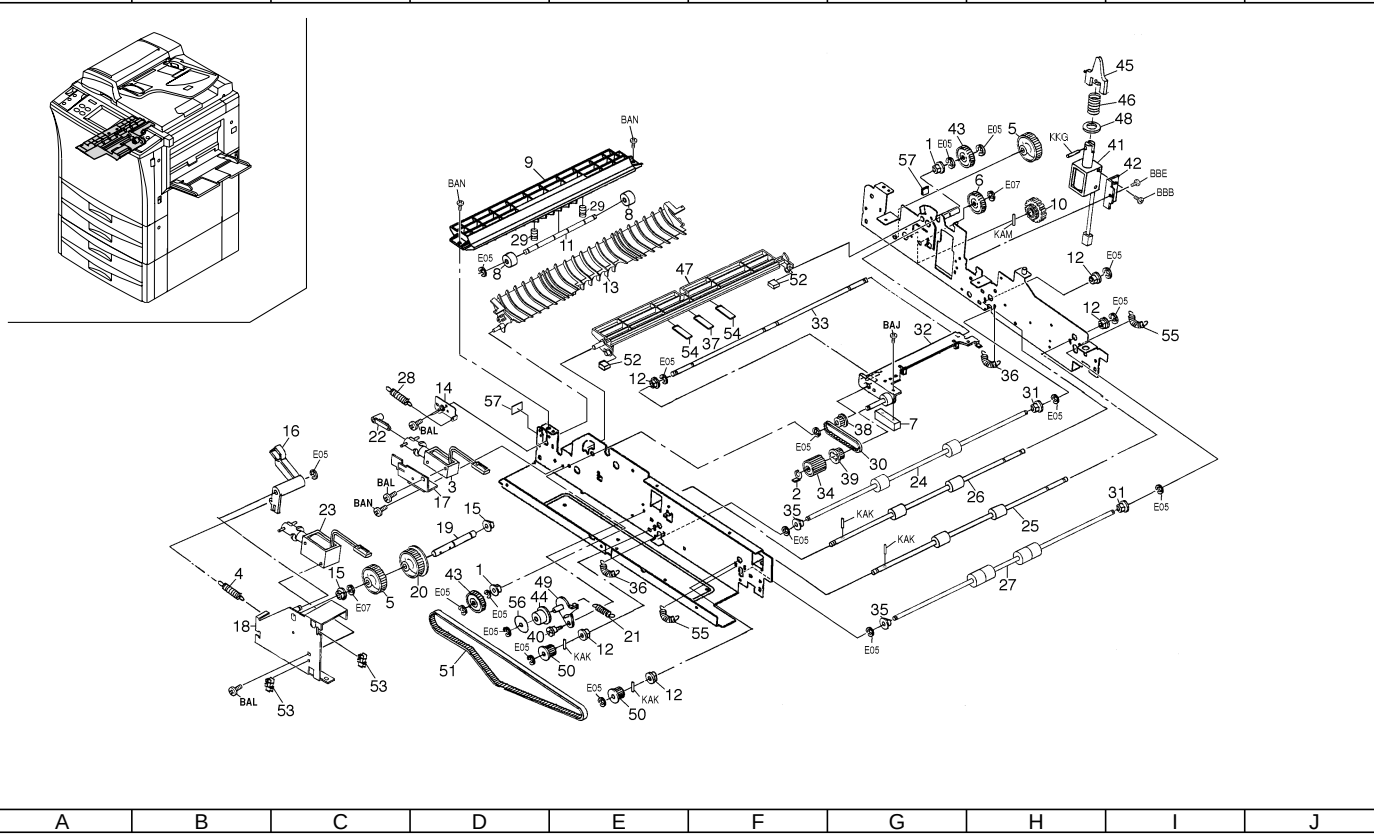
A B C D E F G H I J
1 2 3 4 5 6 7
BAN
BAL
BAJ
KAK
KAM
KKG
BBE
BBB
E05
E07

FIG. 22 DUPLEX UNIT I

2A3/2A4

SP	Ref. No.	Part. No.	Description	Quantity 230V	240V	120V
◉	1	29806810	BUSHING,6 REGISTRATION	2	2	2
	2	63511220	STOP RING,4	1	1	1
◉	3	18327130	SOLENOID,STOPPER	1	1	1
	4	48527321	SPRING,CLEANING UNIT LEVE	1	1	1
◉	5	45727303	GEAR 26,CLUTCH	2	2	2
◉	6	45728116	GEAR 28,JOINT	1	1	1
	7	33906180	WEIGHT,LEADING FEED PULLEY	1	1	1
◉	8	33906660	RIGHT PULLEY,FEED	2	2	2
	9	2AC07100	UPPER GUIDE,DUPLEX REFEED	1	1	1
◉	10	2AC07050	GEAR 20/30,DUPLEX REGISTRATION	1	1	1
	11	2AC07090	SHAFT,REFEED PULLEY	1	1	1
◉	12	73210450	BUSH, 6	5	5	5
	13	2AC07110	GUIDE,TURN OVER FEED SHIFT	1	1	1
	14	2AC07120	SUPPORT PLATE,GUIDE TURN OVER FEED SHIFT	1	1	1
◉	15	67322230	BUSHING 8	2	2	2
	16	68721500	LEVER,TRAILING EDGE TAPPING	1	1	1
	17	2AC07140	MOUNT,TURN OVER FEED SHIFT SOLENOID	1	1	1
	18	2AC07190	MOUNT,TRAILING EDGE TAPPING SOLENOID	1	1	1
	19	2AC07070	SHAFT,DUPLEX CONVEYING DRIVE	1	1	1
◉	20	68721630	PULLEY 40,DUPLEX CONVEYING	1	1	1
	21	68721760	SPRING,TRAILING EDGE TAPPING	1	1	1
	22	2AC07150	LEVER,TURN OVER FEED SHIFT SOLENOID	1	1	1
◉	23	68727080	SOLENOID,TRAILING EDGE TAPPING	1	1	1
◉	24	2AC07210	LOWER ROLLER,DUPLEX CONVEYING	1	1	1
◉	25	2AC07301	ROLLER C,DUPLEX CONVEYING	1	1	1
◉	26	68721750	ROLLER B,DUPLEX CONVEYING	1	1	1
◉	27	2AC07311	LOWER ROLLER B,DUPLEX CONVEYING	1	1	1
	28	63213360	SPRING,PAPER EJECT HOLDER	1	1	1
	29	2AC07450	SPRING,FEED	2	2	2
◉	30	62207180	BELT,LEADING EDGE	1	1	1
◉	31	72107160	BUSHING 6,LOWER REGISTRATION ROLLER	2	2	2
	32	2AC07200	SUPPORT PLATE,LEADING REGISTRATION	1	1	1
	33	2AC07060	SHAFT,LEADING REGISTRATION	1	1	1
◉	34	68721420	PULLEY,LEADING REGISTRATION	1	1	1
◉	35	72107760	BUSHING 6,REGISTRATION ROLLER	2	2	2
◉	36	76007150	SPRING PAPER PAD PULLEY	2	2	2
◉	37	2AC07420	FILM,TRAILING EDGE TAPPING	1	1	1
◉	38	73210350	TIMING PULLEY 27,LOOP	1	1	1
◉	39	2AC07400	PULLEY 22,LEADING REGISTRATION	1	1	1
	40	48129000	PIN,ORIGINAL HOLDER	1	1	1
◉	41	68727100	SOLENOID,LEADING REGISTRATION	1	1	1
	42	68721800	MOUNT,LEADING REGISTRATION SOLENOID	1	1	1
◉	43	73210370	GEAR 18,LOOP	2	2	2
◉	44	75722252	IDLE PULLEY 15	1	1	1
	45	68721450	LEVER,LEADING REGISTRATION	1	1	1
	46	68721460	SPRING,LEADING REGISTRATION SOLENOID	1	1	1
	47	2AC07270	GUIDE,TRAILING EDGE TAPPING	1	1	1
	48	68721730	STOPPER,LEADING FEED SOLENOID	1	1	1
	49	68721571	TENSION PLATE,DUPLEX CONVEYING	1	1	1
◉	50	68721640	PULLEY 20,DUPLEX CONVEYING	2	2	2
◉	51	68721660	BELT 600,DUPLEX CONVEYING	1	1	1
	52	68721720	STOPPER,TRAILING EDGE TAPPING	2	2	2
	53	M2104260	EDGING,EDS-0607U(KITAGAWA)	2	2	2
◉	54	2AC07430	FILM B,TRAILING EDGE TAPPING	2	2	2
	55	29717220	PRESSING SPRING B,SB	2	2	2
	56	34922530	COLLAR,PULLEY	1	1	1
	57	2AC07441	GUIDE FILM,DUPLEX FEED IN	6	6	6
	58	2AC07460	STOPPER,TRAILING EDGE TAPPING	2	2	2

• Parts with "•" are component parts or sub-assemblies of the assembly appearing immediately above them.
• Parts with "◉" indicates the Service parts.

• Parts with "• •" are component parts or sub-assembly with "•" appearing immediately above them.

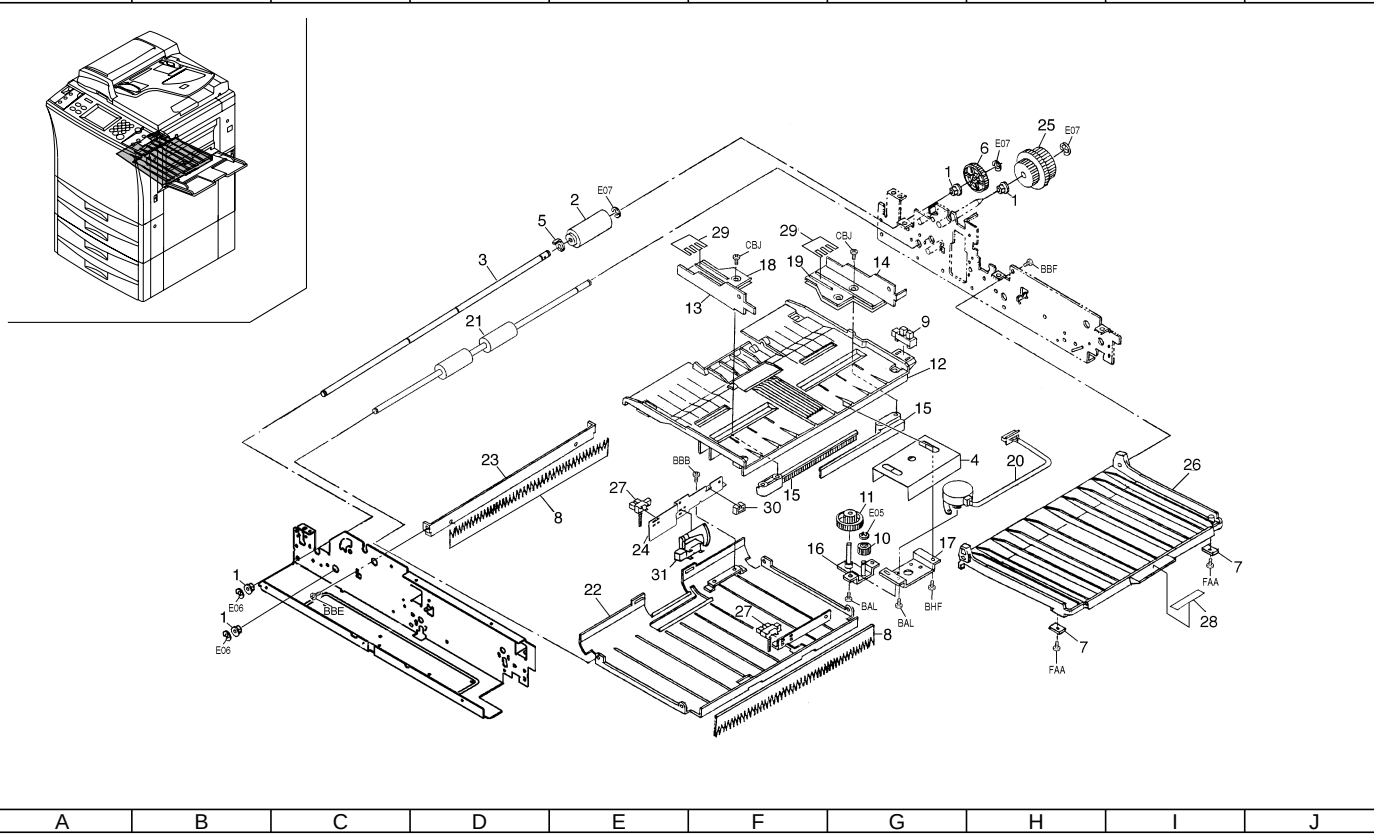
A B C D E F G H I J
1 2 3 4 5 6 7
E07
CBJ
BBF
BBB
E05
BAL
BHF
E06
BBE
FAA

FIG. 23 DUPLEX UNIT II

SP	Ref. No.	Part. No.	Description	Quantity		
				230V	240V	120V
	1	67322230	BUSHING 8	6	6	6
◉	2	68721030	PULLEY,TURN OVER	1	1	1
	3	2AC07030	SHAFT,REFEED	1	1	1
	4	2AC07370	RADIATOR,DUPLEX MOTOR	1	1	1
	5	75706040	STOPRING PAPER FEED PULLEY	1	1	1
◉	6	61522040	DRIVE GEAR,FIXING SECTION	1	1	1
	7	65973030	MAGNET,CARTRIDGE	2	2	2
◉	8	67421330	STATIC ELIMINATOR,DUPLEX UNIT	2	2	2
	9	66006350	SWITCH,CASSETTE LIFT	1	1	1
◉	10	65815060	IDLE GEAR 40,TONER SUPPLY	1	1	1
◉	11	66717230	GEAR,SIDE REGISTRATION	1	1	1
	12	2AC07160	LEFT GUIDE,MIDDLE TRAY	1	1	1
	13	68721350	FRONT GUIDE,SIDE REGISTRATION	1	1	1
	14	68721360	REAR GUIDE,SIDE REGISTRATION	1	1	1
◉	15	68721370	RACK,SIDE REGISTRATION	2	2	2
	16	68721380	MOUNT,SIDE REGISTRATION DRIVE	1	1	1
	17	68721390	MOUNT,SIDE REGISTRATION MOTOR	1	1	1
	18	68721821	FRONT GUIDE,SIDE REGISTRATION COVER	1	1	1
	19	68721831	REAR GUIDE,SIDE REGISTRATION COVER	1	1	1
◉	20	2AC07380	MOTOR,DUPLEX SIDE REGISTRATION	1	1	1
◉	21	2AC07040	UPPER ROLLER,DUPLEX REGISTRATION	1	1	1
	22	68721180	UPPER GUIDE,DUPLEX CONVEYING	1	1	1
	23	68721340	INNER SUPPORT PLATE,DUPLEX UNIT	1	1	1
	24	2AC07281	MOUNT,DUPLEX SWITCH	1	1	1
◉	25	68721600	GEAR,DUPLEX JOINT	1	1	1
	26	68721770	RIGHT GUIDE,MIDDLE TRAY	1	1	1
	27	68727030	SWITCH,DUPLEX CONVEYING	2	2	2
	28	68705040	RIGHT LABEL,MIDDLE TRAY RELEASE	1	1	1
	29	2AC07390	GUIDE FILM,DUPLEX SIDE REGISTRATION	2	2	2
	30	M2104260	EDGING,EDS-0607U(KITAGAWA)	1	1	1
	31	68727110	SWITCH,DUPLEX EJECT	1	1	1

• Parts with "•" are component parts or sub-assemblies of the assembly appearing immediately above them.
• Parts with "◉" indicates the Service parts.

• Parts with "• •" are component parts or sub-assembly with "•" appearing immediately above them.

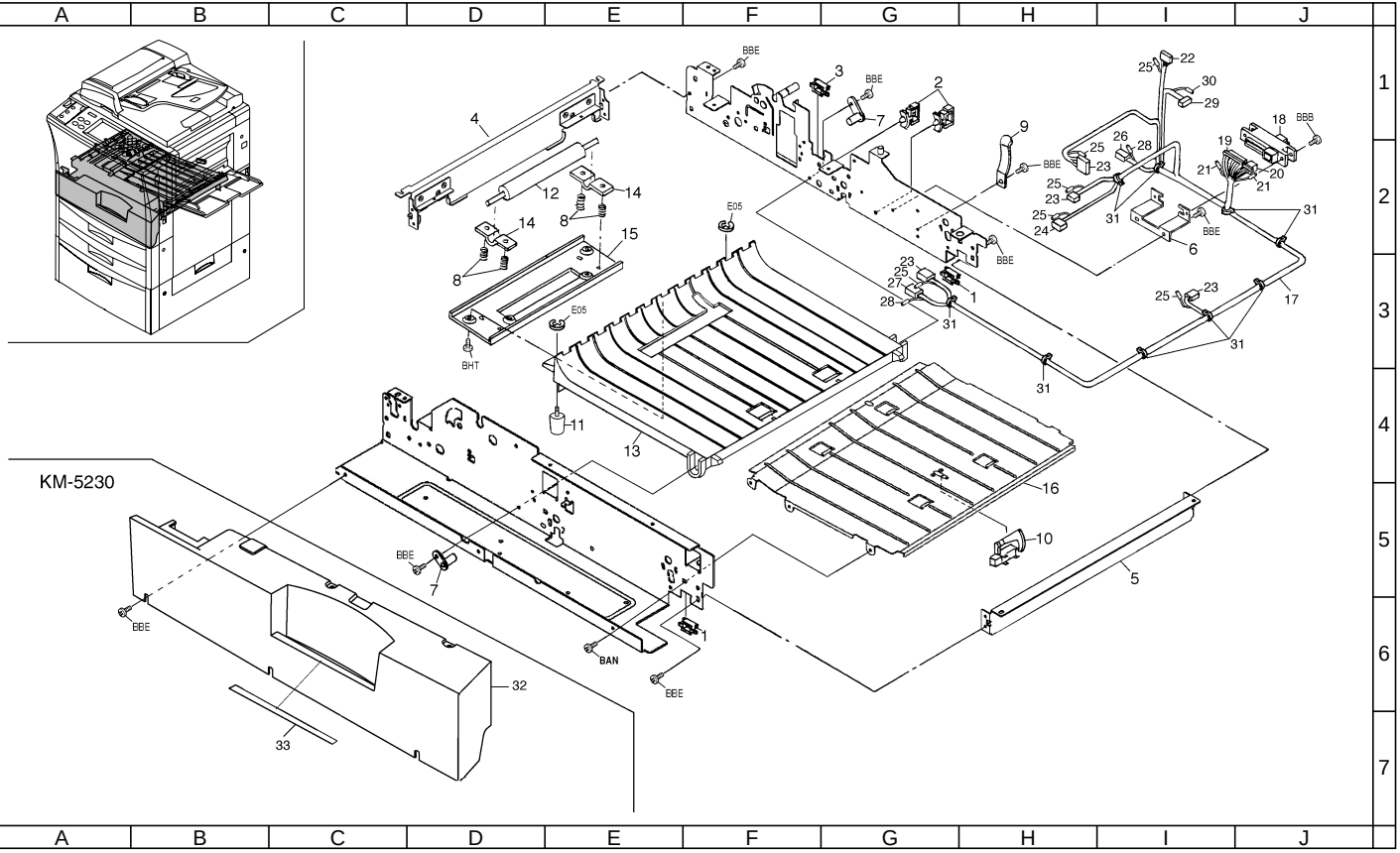
KM-5230
BBE
BBB
BHT
BAN
E05

FIG. 24 DUPLEX UNIT III

SP	Ref. No.	Part. No.	Description	Quantity		
				230V	240V	120V
	1	M2104210	EDGING,EDS-2	2	2	2
	2	M2109180	WIRE SADDLE,LWS-1S	2	2	2
	3	M2104250	EDGING,EDS-17L(KITAGAWA)	1	1	1
	4	2AC07320	LEFT SUPPORT PLATE,DUPLEX UNIT	1	1	1
	5	2AC07330	RIGHT SUPPORT PLATE,DUPLEX UNIT	1	1	1
	6	2AC07170	MOUNT,DUPLEX DRAWER	1	1	1
	7	68721740	PIN,DUPLEX CONVEYING FULCRUM	2	2	2
	8	78112040	SPRING CIS	4	4	4
	9	68721840	GROUND PLATE,DUPLEX	1	1	1
	10	68727110	SWITCH,DUPLEX EJECT	1	1	1
	11	68721780	RETAINING PIN,CONVEYING	2	2	2
◉	12	68721080	LOWER ROLLER,DUPLEX REGISTRATION	1	1	1
	13	2AC07230	LEFT GUIDE,DUPLEX CONVEYING	1	1	1
	14	68721220	PRESSING PLATE,DUPLEX REGISTRATION	2	2	2
	15	68721210	RETAINER,DUPLEX REGISTRATION	1	1	1
	16	2AC07220	RIGHT GUIDE,DUPLEX CONVEYING	1	1	1
	17	2AC27580	WIRE,DUPLEX UNIT	1	1	1
	18	•J0463400	PLUG,QR/P15-40S(HIROSE)	1	1	1
	19	•J0440220	W-LOW SOCKET 22P,DF11-22DS-2C	1	1	1
	20	•J0441180	RECEPTACLE,DF11-18DS-2C(HIROSE)	1	1	1
	21	•J0441900	CONTACTOR,DF11-2428SC	2	2	2
	22	•J0450060	PLUG,DF3-6S-2C(HIROSE)	1	1	1
	23	•J0450030	PLUG,DF3-3S-2C(HIROSE)	4	4	4
	24	•J0451030	PLUG,DF3-3S-2C(18)(HIROSE)	1	1	1
	25	•J0450900	SOCKET,DF3-2428SC(HIROSE)	6	6	6
	26	•J0241020	PLUG SM 2P,SMP-02V-BC	1	1	1
	27	•J0241030	PLUG SM 3P,SMP-03V-BC	1	1	1
	28	•J0250900	SOCKET,BHF-001T-0.8SS	2	2	2
	29	•J0153030	RECEPTACLE,179228-3(AMP)	1	1	1
	30	•J0153900	CONTACTOR,179518-1(AMP)	1	1	1
	31	•M2607010	BINDING BAND,PLT1M	9	9	9
◉	32	2AD04060	COVER,DUPLEX UNIT (5230 EXCLUSIVE)	1	1	1
	33	2AD05060	LABEL,DUPLEX COVER (5230 EXCLUSIVE)	1	1	1

• Parts with "•" are component parts or sub-assemblies of the assembly appearing immediately above them.
• Parts with "◉" indicates the Service parts.

• Parts with "• •" are component parts or sub-assembly with "•" appearing immediately above them.

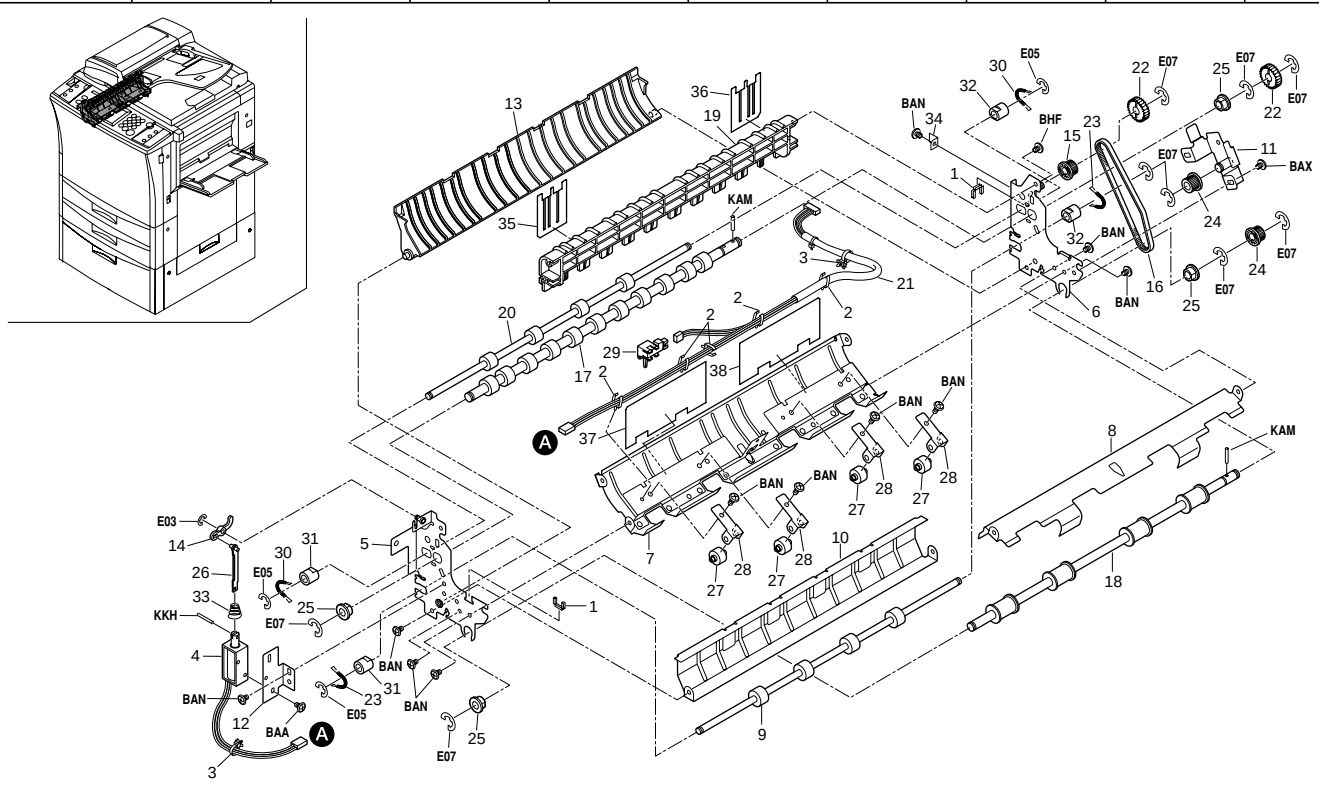
A
B
C
D
E
F
G
H
I
J
1
2
3
4
5
6
7
BAN
BHF
BAX
BAA
KAM
KKH
E03
E05
E07

FIG. 25 REVERSING SECTION

SP	Ref. No.	Part. No.	Description	Quantity		
				230V	240V	120V
	1	M2104260	EDGING,EDS-0607U(KITAGAWA)	2	2	2
	2	M2105740	MINIATURE CLAMP,UAMS-05S-2	5	5	5
	3	M2107120	BINDING BAND SG-130	2	2	2
◉	4	18327130	SOLENOID,STOPPER	1	1	1
	5	2AC21510	FRONT FRAME,FEED SHIFT	1	1	1
	6	2AC21520	REAR FRAME,FEED SHIFT	1	1	1
	7	2AC21540	LOWER RIGHT GUIDE,FEED SHIFT	1	1	1
	8	2AC21550	LOWER GUIDE,FEED SHIFT	1	1	1
◉	9	2AC21560	RIGHT ROLLER,TURN OVER FEED	1	1	1
	10	2AC21570	LOWER RIGHT GUIDE,TURN OVER EJECT	1	1	1
	11	2AC21580	TENSION PLATE,FEED SHIFT DRIVE	1	1	1
	12	2AC21590	MOUNT,FEED SHIFT SOLENOID	1	1	1
	13	2AC21610	LOWER LEFT GUIDE,FEED SHIFT	1	1	1
	14	2AC21630	LEVER A,FEED SHIFT SOLENOID	1	1	1
◉	15	2AC21650	PULLEY 22,FEED SHIFT	1	1	1
◉	16	2AC21660	BELT,FEED SHIFT	1	1	1
◉	17	2AC21680	RIGHT ROLLER,FEED SHIFT	1	1	1
◉	18	2AC21690	LOWER ROLLER,FEED SHIFT	1	1	1
	19	2AC21760	UPPER RIGHT GUIDE,FEED SHIFT	1	1	1
◉	20	2AC21770	LEFT ROLLER,FEED SHIFT	1	1	1
	21	2AC27620	JUNCTION WIRING,FEED SHIFT	1	1	1
◉	22	45729403	GEAR 19,S.B	2	2	2
	23	29717220	PRESSING SPRING B,SB	2	2	2
◉	24	65722030	PULLEY 22,FEED	2	2	2
	25	67322230	BUSHING 8	4	4	4
	26	68720120	LEVER B,FEED SHIFT SOLENOID	1	1	1
◉	27	68720160	PULLEY,FEED SHIFT	4	4	4
	28	68720170	MOUNT,FEED SHIFT PULLEY	4	4	4
	29	68727030	SWITCH,DUPLEX CONVEYING	1	1	1
	30	71821600	SPRING,UPPER EJECT ROLLER	2	2	2
◉	31	72107160	BUSHING 6,LOWER REGISTRATION ROLLER	2	2	2
◉	32	72107760	BUSHING 6,REGISTRATION ROLLER	2	2	2
	33	73226040	SPRING,REVERSE SOLENOID	1	1	1
	34	68721790	LOWER STOPPER,DUPLEX CONVEYING	1	1	1
◉	35	2AC21210	FRONT UPPER SHEET,FEED SHIFT	1	1	1
◉	36	2AC21220	REAR UPPER SHEET,FEED SHIFT	1	1	1
◉	37	2AC21230	FRONT LOWER SHEET,FEED SHIFT	1	1	1
◉	38	2AC21240	REAR LOWER SHEET,FEED SHIFT	1	1	1

• Parts with "•" are component parts or sub-assemblies of the assembly appearing immediately above them.
• Parts with "◉" indicates the Service parts.

• Parts with "• •" are component parts or sub-assembly with "•" appearing immediately above them.

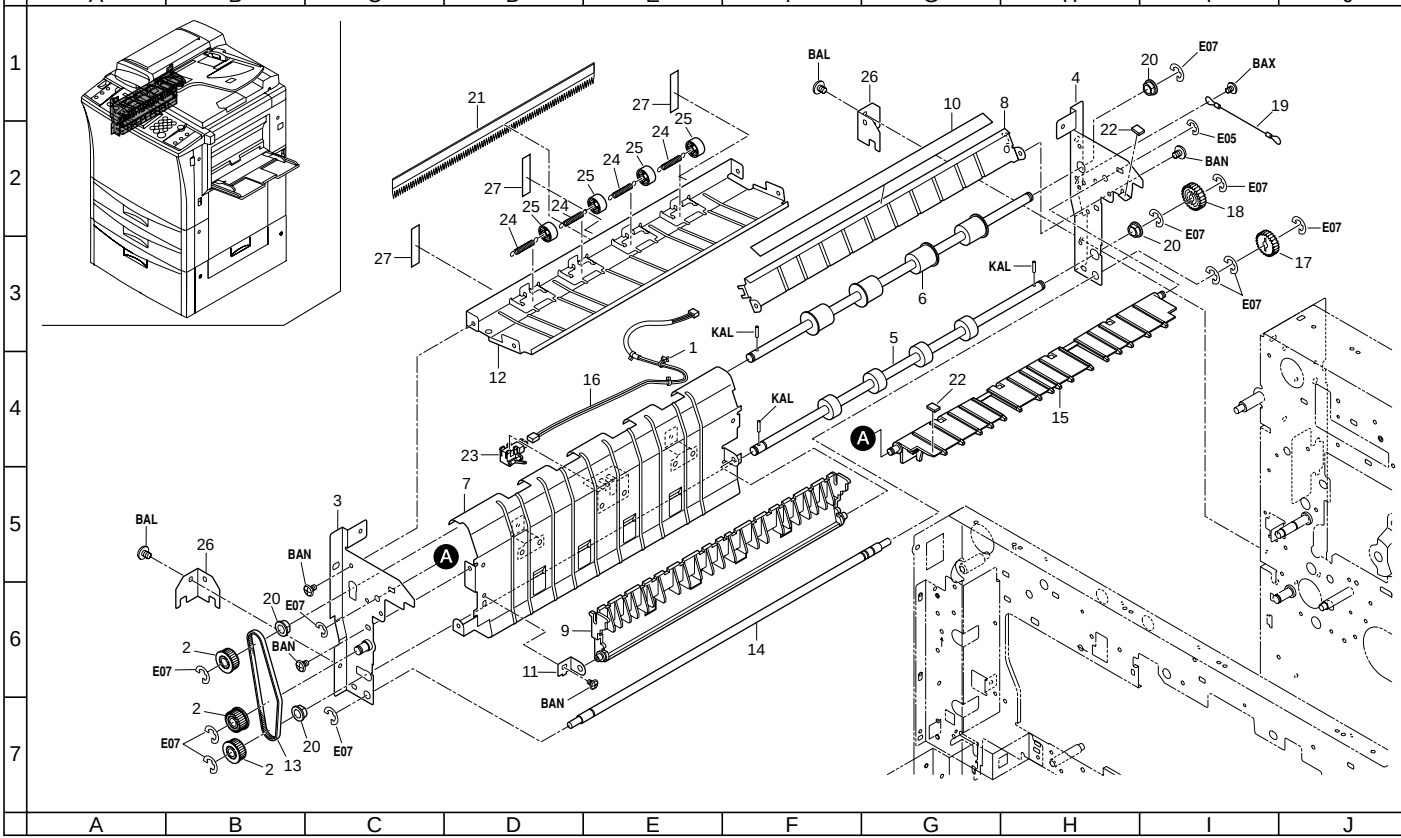
A
B
C
D
E
F
G
H
I
J
1
2
3
4
5
6
7
BAL
BAN
BAX
E05
E07
KAL
20
21
22
23
24
25
26
27
E07
E07
E07

FIG. 26 PAPER EJECT SECTION

SP	Ref. No.	Part. No.	Description	Quantity		
				230V	240V	120V
	1	M2107120	BINDING BAND SG-130	1	1	1
◉	2	18307380	PULLEY 28P2M,JOINT	3	3	3
	3	2AC21010	FRONT FRAME,EJECT	1	1	1
	4	2AC21020	REAR FRAME,EJECT	1	1	1
◉	5	2AC21030	LEFT ROLLER,TURN OVER FEED	1	1	1
◉	6	2AC21040	ROLLER,TURN OVER EJECT	1	1	1
	7	2AC21050	LEFT GUIDE,TURN OVER EJECT	1	1	1
	8	2AC21061	UPPER RIGHT GUIDE,TURN OVER EJECT	1	1	1
	9	2AC21071	INNER RIGHT GUIDE,TURN OVER EJECT	1	1	1
	10	2AC21080	UPPER RIGHT FILM,GUIDE FILM TURN OVER	1	1	1
	11	2AC21100	RIGHT SUPPORT PLATE,GUIDE TURN OVER MIDD	1	1	1
	12	2AC21131	UPPER GUIDE,EJECT	1	1	1
◉	13	2AC21180	BELT,EJECT DRIVE	1	1	1
	14	2AC21190	SHAFT,EJECT	1	1	1
	15	2AC21200	GUIDE,EJECT	1	1	1
	16	2AC27630	JUNCTION WIRING,EJECT	1	1	1
◉	17	45729416	GEAR,TONER ROLLER	1	1	1
◉	18	45729420	GEAR,LOWER TRANSFER ROLLER	1	1	1
	19	33921190	STRAP,EJECT	1	1	1
◉	20	67322230	BUSHING 8	4	4	4
◉	21	2AC21250	STATIC ELIMINATOR,EJECT	1	1	1
	22	68721720	STOPPER,TRAILING EDGE TAPPING	2	2	2
	23	68727030	SWITCH,DUPLEX CONVEYING	1	1	1
	24	72907110	SPRING,PAPER GUIDE PULLEY	4	4	4
◉	25	75720151	EJECT PULLEY	4	4	4
	26	2AC21120	HOLDER,EJECT FULCRUM	2	2	2
	27	2AC04460	LEFT SPONGE C,MIDDLE COVER(EUR)	3	3	3

• Parts with "•" are component parts or sub-assemblies of the assembly appearing immediately above them.
• Parts with "◉" indicates the Service parts.

• Parts with "• •" are component parts or sub-assembly with "•" appearing immediately above them.

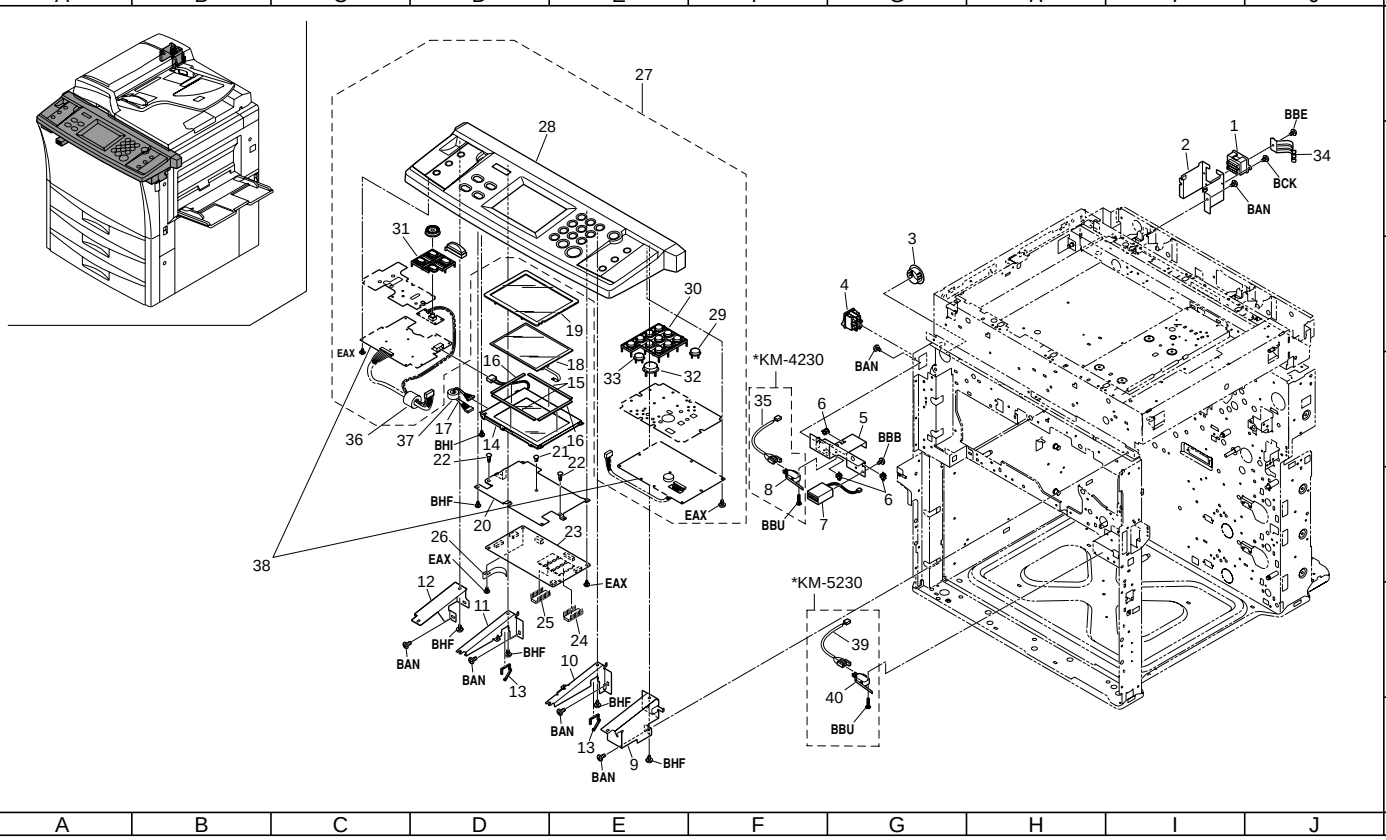
A B C D E F G H I J
1 2 3 4 5 6 7
27
28
31
30
29
19
16
18
15
33
32
EAX
36
37
17
BHI
14
21
22
16
22
BHF
20
23
26
EAX
EAX
12
11
25
24
BAN
BHF
BAN
BHF
13
10
BHF
BAN
13
9
BHF
BAN
38
*KM-4230
35
6
5
BBB
8
6
BBU
7
*KM-5230
39
40
BBU
3
4
BAN
1
BBE
2
34
BCK
BAN

FIG. 27 ELECTRICAL COMPONENTS I

SP	Ref. No.	Part. No.	Description	Quantity		
				230V	240V	120V
	1	J0388460	RECEPTACLE,52918-4615(MOLEX)	1	1	1
	2	2AC26190	MOUNT,DF CONNECTOR	1	1	1
	3	M1203610	BUSHING,SB-1187-15(HEYCO)	1	1	1
	4	69027070	SWITCH,MAIN	1	1	1
	5	2AC04140	MOUNT,SAFETY SWITCH	1	1	1
	6	M2104260	EDGING,EDS-0607U(KITAGAWA)	3	3	3
	7	2AC27330	TOTAL COUNTER	1	1	1
	8	61727540	INTERLOCK SWITCH B (4230 EXCLUSIVE)	1	1	1
	9	2AC26100	RIGHT MOUNT,OPERATION UNIT	1	1	1
	10	2AC26110	INNER RIGHT MOUNT,OPERATION UNIT	1	1	1
	11	2AC26120	INNER LEFT MOUNT,OPERATION UNIT	1	1	1
	12	2AC26130	LEFT MOUNT,OPERATION UNIT	1	1	1
	13	M2104250	EDGING,EDS-17L(KITAGAWA)	2	2	2
◉	14	33928040	LCD PCB	1	1	1
	15	33925050	CUSHION,LCD LARGE	2	2	2
	16	33925060	CUSHION,LCD SMALL	2	2	2
	17	33927090	WIRE,LCD JUNCTION	1	1	1
◉	18	33927600	TABLET B,OPERATION	1	1	1
◉	19	33926150	BARRIER,TABLET	1	1	1
	20	2AC26050	MOUNT,OPERATION UNIT MAIN PCB	1	1	1
	21	M2108880	SPACER,KGPS-5RF(KITAGAWA)	1	1	1
	22	M2108920	SPACER,KGLS-5RT(KITAGAWA)	2	2	2
◉	23	2AC28030	OPERATION UNIT MAIN PCB	1	1	1
◉	24	2A368030	ROM OPERATION UNIT ASS'Y SP	1	1	1
◉	25	2A368040	ROM FONT1 ASS'Y SP	0	0	1
◉	25	2A368050	ROM FONT2 ASS'Y SP	1	1	0
	26	2AC26290	GROUND PLATE,OPERATION UNIT (5230 EXCLUSIVE)	1	1	1
◉	27	2A324010	OPERATION UNIT(METRIC)	1	1	0
◉	27	2A324020	OPERATION UNIT(INCH)	0	0	1
◉	28	•2A368290	HOUSING,OPERATION UNIT(METRIC)	1	1	0
◉	28	•2A368300	HOUSING,OPERATION UNIT(INCH)	0	0	1
◉	29	•2A368220	KEY TOP,RESET(METRIC)	1	1	0
◉	29	•2A368230	KEY TOP,RESET(INCH)	0	0	1
◉	30	•2A368240	KEY TOP 10,KEY	1	1	1
◉	31	•2A368250	KEY TOP,FUNCTION KEY(METRIC)	1	1	0
◉	31	•2A368270	KEY TOP,FUNCTION KEY(INCH)	0	0	1
◉	32	•2AC68080	KEY TOP,PRINT(METRIC)	1	1	0
◉	32	•2A368200	KEY TOP,PRINT(INCH)	0	0	1
◉	33	•2A368320	KEY TOP,STOP(METRIC)	1	1	0
◉	33	•2A368330	KEY TOP,STOP(INCH)	0	0	1
	34	2AC26250	GROUND PLATE,SCANNER	1	1	1
	35	2AC27890	JUNCTION WIRING,INTERLOCK (4230 EXCLUSIVE)	1	1	1
	36	33927580	CORE 9-20X32	1	1	1
	37	33927590	CORE 7-15X18	1	1	1
◉	38	2AC93410	PARTS,OPERATION UNIT PCB SP	1	1	1
	39	2AD27060	JUNCTION WIRING,INTERLOCK (5230 EXCLUSIVE)	1	1	1
	40	2AD27050	INTERLOCK SWITCH (5230 EXCLUSIVE)	1	1	1

• Parts with "•" are component parts or sub-assemblies of the assembly appearing immediately above them.
• Parts with "◉" indicates the Service parts.

• Parts with "• •" are component parts or sub-assembly with "•" appearing immediately above them.

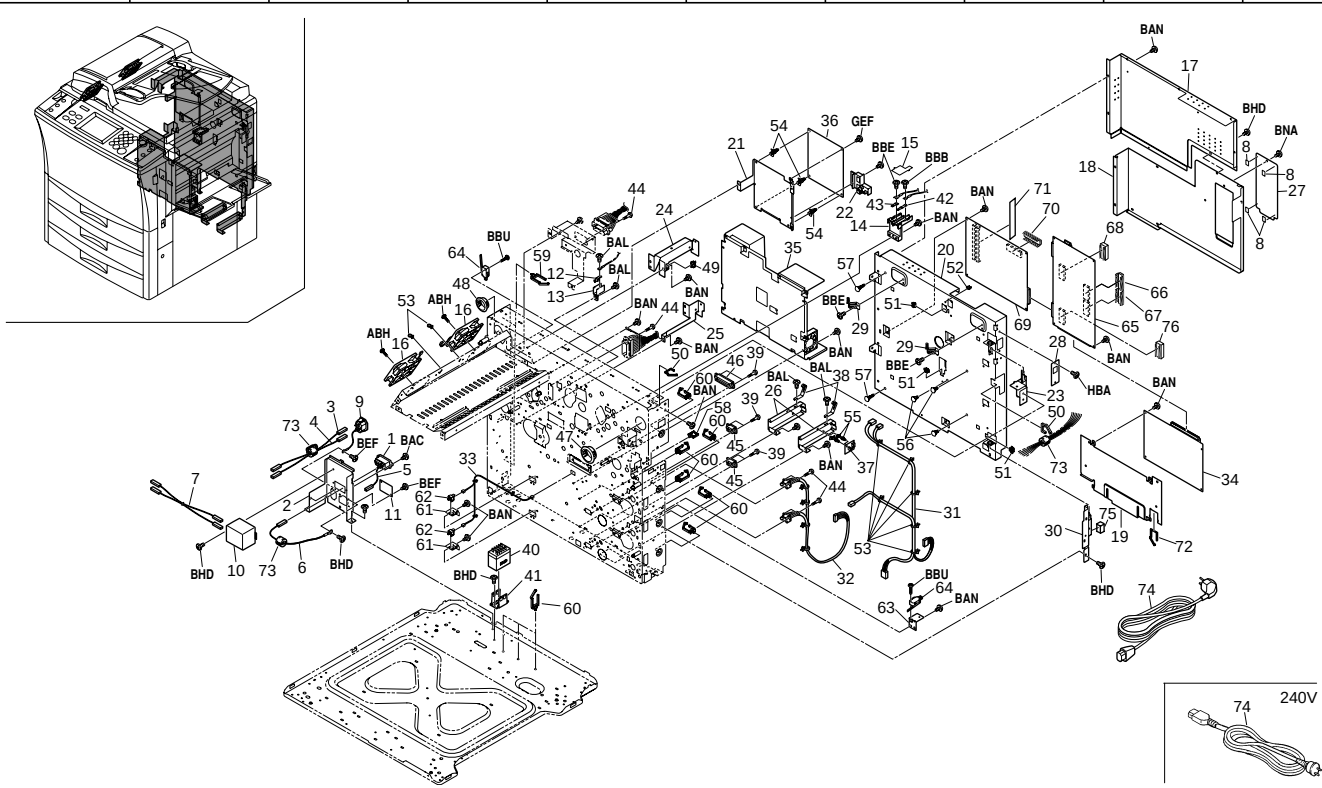
240V

FIG. 28 ELECTRICAL COMPONENTS II (230/240V)

SP	Ref. No.	Part. No.	Description	Quantity 230V	240V	120V
	1	J0325160	CASE,54111-1615(MOLEX)	1	1	0
	2	2AC26220	MOUNT,POWER SOURCE SUPPLY(200)	1	1	0
	3	2AC27830	WIRING,INLET N	1	1	0
	4	2AC27840	WIRING,INLET L	1	1	0
	5	2AC27870	JUNCTION WIRING G,FINISHER	1	1	0
	6	2AC27880	WIRE FG,FINISHER	1	1	0
	7	2AC27900	WIRE,NOISE FILTER	1	1	0
	8	2AC26300	SHIELD 10X5X20,GASKET	4	4	0
	9	63801050	INLET WIRING ASS'Y	1	1	0
	10	75727021	NOISE FILTER(200)	1	1	0
	11	77502090	LID FINISHER CABLE	1	1	0
	12	2AC10210	TERMINAL,GRID CATCH	1	1	0
	13	2AC14080	HOUSING DB,CONNECTOR	1	1	0
◉	14	2AC17050	HOUSING,TRANSFER CONNECTOR	1	1	0
◉	15	2AC17080	LID,TRANSFER CONNECTOR	1	1	0
◉	16	2AC23060	FAN,COOLING	2	2	0
	17	2AC26010	LID,MAIN PCB	1	1	0
	18	2AC26020	LID,SEQUENCE	1	1	0
	19	2AC26060	MOUNT,OUTPUT	1	1	0
	20	2A326010	MOUNT,SEQUENCE	1	1	0
	21	2AC26080	MOUNT,HIGH VOLTAGE PCB	1	1	0
	22	2AC26090	GUIDE,HIGH VOLTAGE WIRE	1	1	0
	23	2AC26140	SUPPORT PLATE,SEQUENCE	1	1	0
	24	2AC26150	UPPER RETAINER,SEQUENCE	1	1	0
	25	2AC26160	LOWER RETAINER,SEQUENCE	1	1	0
	26	2AC26170	SUPPORT PLATE,OUTPUT PCB	2	2	0
	27	2AC26180	LID,MAIN PCB ROM	1	1	0
	28	2AC26240	LID,OPTION	1	1	0
	29	2AC26250	GROUND PLATE,SCANNER	2	2	0
	30	2AC26280	LOWER SUPPORT PLATE,SEQUENCE	1	1	0
	31	2A327310	WIRE S-BOX,POWER SOURCE	1	1	0
	32	2AC27610	WIRE,PRIMARY PAPER FEED	1	1	0
	33	2AC27700	REAR WIRE,CASSETTE SW	1	1	0
◉	34	2A328020	ENGINE OUTPUT PCB	1	1	0
◉	35	2A328060	POWER SOURCE PCB(200)	1	1	0
◉	36	2AC28011	MAIN PCB	1	1	0
◉	37	2A327010	SENSOR,HUMIDITY	1	1	0
	38	18526340	GROUND PLATE,LCD	2	2	0
	39	33927450	RETAINING PIN,DRAWER	6	6	0
◉	40	34027070	RELAY 4P,POWER	1	1	0
	41	34027120	MOUNT BASE,POWER RELAY	1	1	0
◉	42	34817260	TERMINAL,TRANSFER CONNECTOR	1	1	0
◉	43	34817270	TERMINAL,SEPARATION CONNECTOR	1	1	0
	44	74327180	PIN,CONNECTOR	8	8	0
	45	J0464080	RECEPTACLE,QR/P15-8S-C(02)(HIROSE)	2	2	0
	46	J0464400	RECEPTACLE,QR/15-40P(02)(HIROSE)	1	1	0
	47	M1203600	BUSHING,SB-1500-21(HEYCO)	1	1	0
	48	M1203610	BUSHING,SB-1187-15(HEYCO)	1	1	0
	49	M2104210	EDGING,EDS-2	1	1	0
	50	M2104250	EDGING,EDS-17L(KITAGAWA)	2	2	0
	51	M2104260	EDGING,EDS-0607U(KITAGAWA)	3	3	0
	52	M2105730	MINIATURE CLAMP,UAMS-07-0	1	1	0
	53	M2107120	BINDING BAND SG-130	8	8	0
	54	M2108120	SPACER,KGLS-4S	3	3	0
	55	M2108190	SPACER,KGLS-10S	2	2	0
	56	M2108850	SPACER,KGPS-8RF(KITAGAWA)	3	3	0
	57	M2108930	SPACER,KGLS-8RT(KITAGAWA)	2	2	0
	58	M2109010	WIRE SADDLE,WS-2NS	1	1	0
	59	M2109270	WIRE SADDLE,LWS-5S-2W(KITAGAWA)	4	4	0
	60	M2109300	WIRE SADDLE,LWS-8SL-2.5W(KITAGAWA)	9	9	0
	61	33907200	MOUNT,PAPER SIZE DETECTION	2	2	0
	62	66127010	SWITCH,COVER OPEN	2	2	0
	63	33906750	RIGHT MOUNT,FEED RELEASE SWITCH	1	1	0
	64	61727540	INTERLOCK SWITCH B	2	2	0
◉	65	2A468010	MAIN PCB ASS'Y SP (5230 EXCLUSIVE)	1	1	0
◉	65	2A368100	MAIN PCB ASS'Y SP (4230 EXCLUSIVE)	1	1	0
◉	66	2A368010	ROM MAIN ASS'Y SP	1	1	0
◉	67	2A368020	ROM ENGINE ASS'Y SP	1	1	0
	68	NAS09020	BACKUP RAM,M48T35Y-70PC1	1	1	0
◉	69	2AC68031	MEMORY COPY PCB ASS'Y SP	1	1	0
◉	70	2AC27083	IC,ROM MEMORY COPY	1	1	0
	71	2AC27120	IC,SIMM	1	1	0
	72	M2104280	EDGING,EDS-25L(KITAGAWA)	1	1	0
	73	63827080	FERRITE CORE	3	3	0
	74	18527460	POWER CORD 220	1	0	0
	74	29927231	POWER CODE AS(240)	0	1	0
	75	2AC26310	SHIELD 10X8X20,GASKET	1	1	0
◉	76	2A368060	ROM SCANNER ASS'Y SP	1	1	0

(NOTE)
Ref no.69170171 are used 2pac each. (KM-5230)

• Parts with "•" are component parts or sub-assemblies of the assembly appearing immediately above them.
• Parts with "◉" indicates the Service parts.

• Parts with "• •" are component parts or sub-assembly with "•" appearing immediately above them.

FIG. 28 ELECTRICAL COMPONENTS II (120V) 2A3/2A4

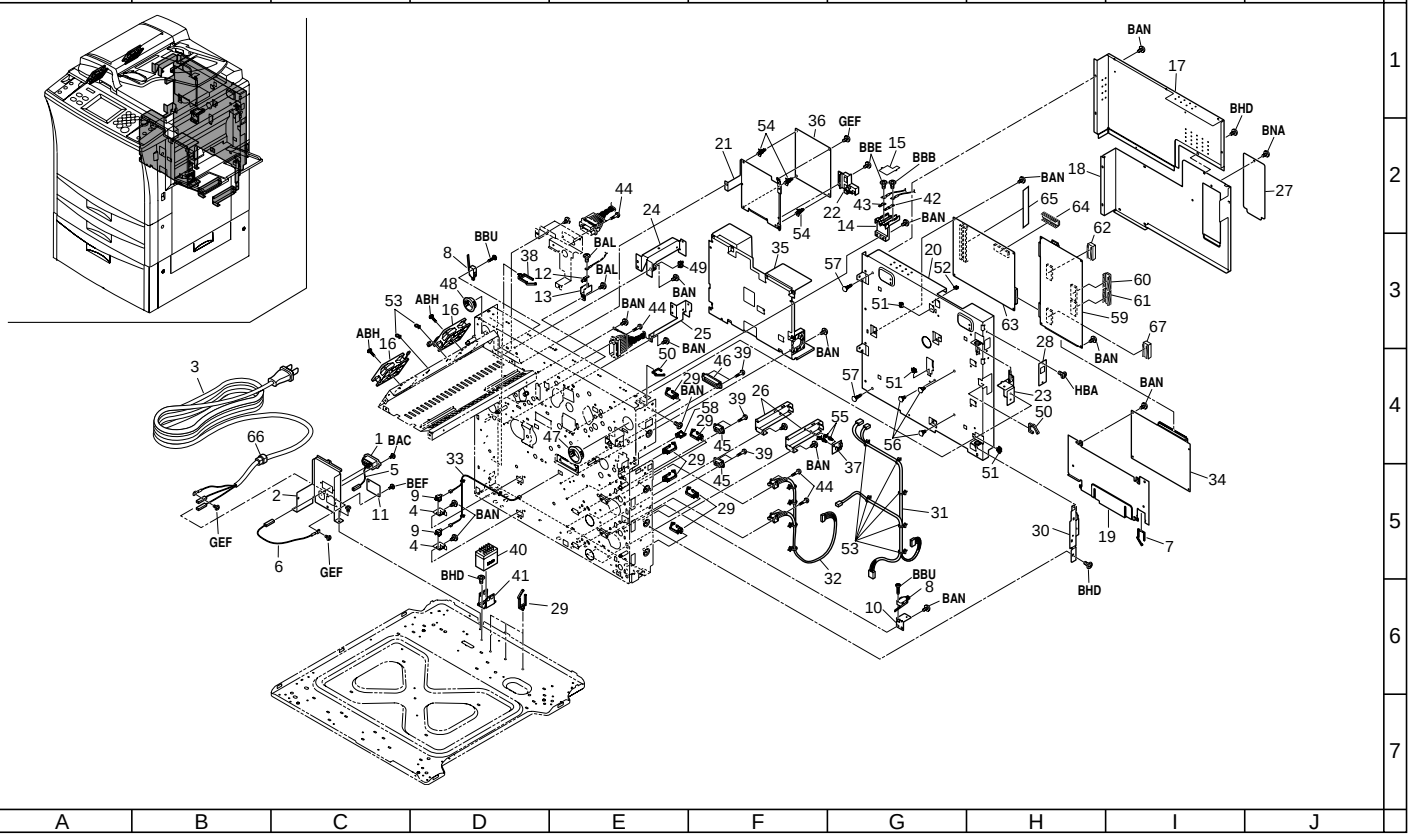

FIG. 28 ELECTRICAL COMPONENTS II (120V)

2A3/2A4

SP	Ref. No.	Part. No.	Description	Quantity 230V	240V	120V
	1	J0325160	CASE,54111-1615(MOLEX)	0	0	1
	2	2AC26210	MOUNT,POWER SOURCE SUPPLY(120)	0	0	1
	3	18501150	POWER CORD ASS'Y (120)	0	0	1
	4	33907200	MOUNT,PAPER SIZE DETECTION	0	0	2
	5	2AC27870	JUNCTION WIRING G,FINISHER	0	0	1
	6	2AC27880	WIRE FG,FINISHER	0	0	1
	7	M2104280	EDGING,EDS-25L(KITAGAWA)	0	0	1
	8	61727540	INTERLOCK SWITCH B	0	0	2
◉	9	66127010	SWITCH,COVER OPEN	0	0	2
	10	33906750	RIGHT MOUNT,FEED RELEASE SWITCH	0	0	1
	11	77502090	LID FINISHER CABLE	0	0	1
	12	2AC10210	TERMINAL,GRID CATCH	0	0	1
	13	2AC14080	HOUSING DB,CONNECTOR	0	0	1
◉	14	2AC17050	HOUSING,TRANSFER CONNECTOR	0	0	1
◉	15	2AC17080	LID,TRANSFER CONNECTOR	0	0	1
◉	16	2AC23060	FAN,COOLING	0	0	2
	17	2AC26010	LID,MAIN PCB	0	0	1
	18	2AC26020	LID,SEQUENCE	0	0	1
	19	2AC26060	MOUNT,OUTPUT	0	0	1
	20	2A326010	MOUNT,SEQUENCE	0	0	1
	21	2AC26080	MOUNT,HIGH VOLTAGE PCB	0	0	1
	22	2AC26090	GUIDE,HIGH VOLTAGE WIRE	0	0	1
	23	2AC26140	SUPPORT PLATE,SEQUENCE	0	0	1
	24	2AC26150	UPPER RETAINER,SEQUENCE	0	0	1
	25	2AC26160	LOWER RETAINER,SEQUENCE	0	0	1
	26	2AC26170	SUPPORT PLATE,OUTPUT PCB	0	0	2
	27	2AC26180	LID,MAIN PCB ROM	0	0	1
	28	2AC26240	LID,OPTION	0	0	1
	29	M2109300	WIRE SADDLE,LWS-8SL-2.5W(KITAGAWA)	0	0	9
	30	2AC26280	LOWER SUPPORT PLATE,SEQUENCE	0	0	1
	31	2A327310	WIRE S-BOX,POWER SOURCE	0	0	1
	32	2AC27610	WIRE,PRIMARY PAPER FEED	0	0	1
	33	2AC27700	REAR WIRE,CASSETTE SW	0	0	1
	34	2A328020	ENGINE OUTPUT PCB	0	0	1
	35	2A328050	POWER SOURCE PCB(100)	0	0	1
	36	2AC28101	HIGH VOLTAGE PCB	0	0	1
	37	2A327010	SENSOR,HUMIDITY	0	0	1
	38	M2109270	WIRE SADDLE,LWS-5S-2W(KITAGAWA)	0	0	4
	39	33927450	RETAINING PIN,DRAWER	0	0	6
	40	34027070	RELAY 4P,POWER	0	0	1
	41	34027120	MOUNT BASE,POWER RELAY	0	0	1
◉	42	34817260	TERMINAL,TRANSFER CONNECTOR	0	0	1
◉	43	34817270	TERMINAL,SEPARATION CONNECTOR	0	0	1
	44	74327180	PIN,CONNECTOR	0	0	8
	45	J0464080	RECEPTACLE,QR/P15-8S-C(02)(HIROSE)	0	0	2
	46	J0464400	RECEPTACLE,QR/15-40P(02)(HIROSE)	0	0	1
	47	M1203600	BUSHING,SB-1500-21(HEYCO)	0	0	1
	48	M1203610	BUSHING,SB-1187-15(HEYCO)	0	0	1
	49	M2104210	EDGING,EDS-2	0	0	1
	50	M2104250	EDGING,EDS-17L(KITAGAWA)	0	0	2
	51	M2104260	EDGING,EDS-0607U(KITAGAWA)	0	0	3
	52	M2105730	MINIATURE CLAMP,UAMS-07-0	0	0	1
	53	M2107120	BINDING BAND SG-130	0	0	8
	54	M2108120	SPACER,KGLS-4S	0	0	3
	55	M2108190	SPACER,KGLS-10S	0	0	2
	56	M2108850	SPACER,KGPS-8RF(KITAGAWA)	0	0	3
	57	M2108930	SPACER,KGLS-8RT(KITAGAWA)	0	0	2
	58	M2109010	WIRE SADDLE,WS-2NS	0	0	1
◉	59	2A468010	MAIN PCB ASS'Y SP (5230 EXCLUSIVE)	0	0	1
◉	59	2A368100	MAIN PCB ASS'Y SP (4230 EXCLUSIVE)	0	0	1
◉	60	2A368010	ROM MAIN ASS'Y SP	0	0	1
◉	61	2A368020	ROM ENGINE ASS'Y SP	0	0	1
	62	NAS09020	BACKUP RAM,M48T35Y-70PC1	0	0	1
	63	2AC68031	MEMORY COPY PCB ASS'Y SP	0	0	1
	64	2AC27083	IC,ROM MEMORY COPY	0	0	1
	65	2AC27120	IC,SIMM	0	0	1
	66	M1203490	STRAIN RELEAF BUSHING,SR-7K-2	0	0	1
◉	67	2A368060	ROM SCANNER ASS'Y SP	0	0	1

(NOTE)
Ref no.69170171 are used 2pac each.
(KM-5230)

• Parts with "•" are component parts or sub-assemblies of the assembly appearing immediately above them.
• Parts with "◉" indicates the Service parts.

• Parts with "• •" are component parts or sub-assembly with "•" appearing immediately above them.

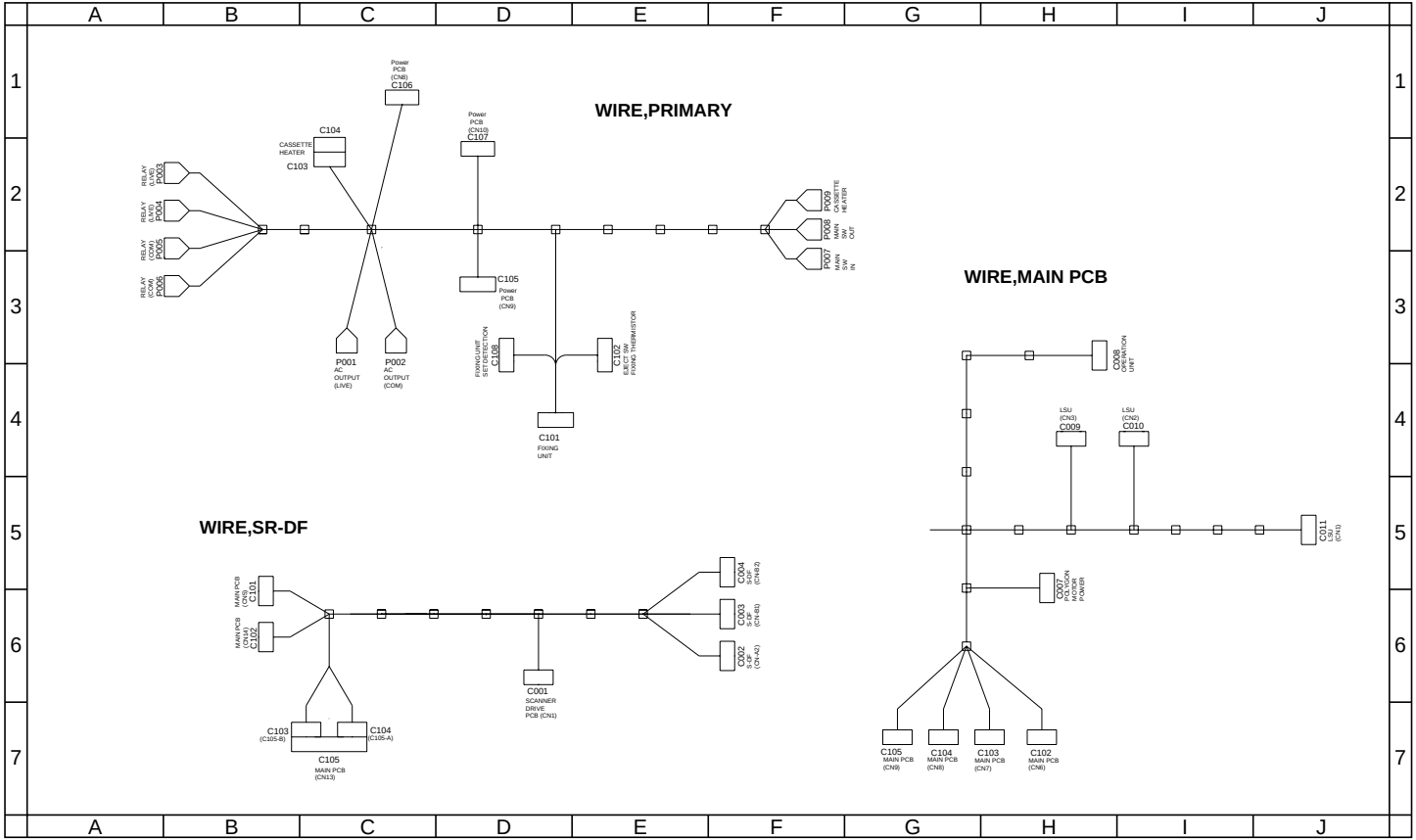
A
B
C
D
E
F
G
H
I
J
1
2
3
4
5
6
7
WIRE,PRIMARY
Power PCB (CN8)
C106
C104
CASSETTE HEATER
C103
Power PCB (CN10)
C107
RELAY CONN P003
RELAY CONN P004
RELAY CONN P005
RELAY CONN P006
P009 CASSETTE HEATER
P008 MAIN SW OUT
P007 MAIN SW IN
C105 Power PCB (CN9)
P001 AC OUTPUT (LIVE)
P002 AC OUTPUT (COM)
FIXING UNIT SET DETECTION
C108
C102 EJECT SW/ FIXING THERMISTOR
C101 FIXING UNIT
WIRE,MAIN PCB
C008 OPERATION UNIT
LSU (CN3)
C009
LSU (CN2)
C010
C011 LSU (CN1)
C007 POLYGON MOTOR POWER
C105 MAIN PCB (CN9)
C104 MAIN PCB (CN8)
C103 MAIN PCB (CN7)
C102 MAIN PCB (CN6)
WIRE,SR-DF
MAIN PCB (CN9)
C101
MAIN PCB (CN8)
C102
C004 SR (CN4-2)
C003 SR (CN4-B1)
C002 SR (CN-A2)
C001 SCANNER DRIVE PCB (CN1)
C103 (C105-B)
C104 (C105-A)
C105 MAIN PCB (CN13)

FIG. 29 ELECTRICAL COMPONENTS III

SP	Ref. No.	Part. No.	Description	Quantity		
				230V	240V	120V
		2A427010	WIRE,MAIN PCB (5230 EXCLUSIVE)	1	1	1
		2A327320	WIRE,MAIN PCB (4230 EXCLUSIVE)	1	1	1
		2A327340	WIRE,PRIMARY	1	1	1
		2A327370	WIRE,SCANNER UNIT	1	1	1

• Parts with "•" are component parts or sub-assemblies of the assembly appearing immediately above them.
• Parts with "◉" indicates the Service parts.

• Parts with "• •" are component parts or sub-assembly with "•" appearing immediately above them.

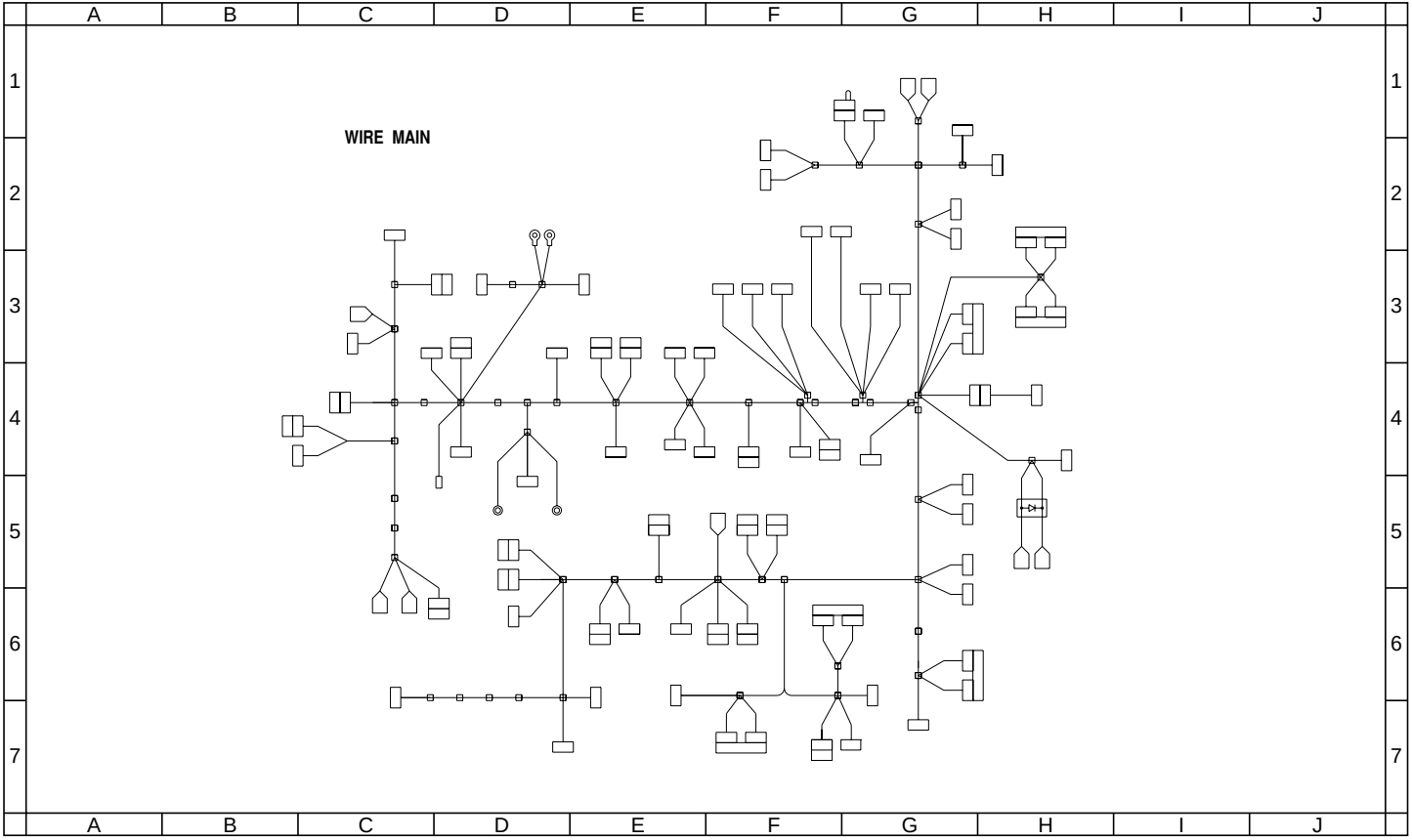
A
B
C
D
E
F
G
H
I
J
1
2
3
4
5
6
7
WIRE MAIN

FIG. 30 ELECTRICAL COMPONENTS IV

SP	Ref. No.	Part. No.	Description	Quantity		
				230V	240V	120V
		2A327300	WIRE,MAIN	1	1	1

• Parts with "•" are component parts or sub-assemblies of the assembly appearing immediately above them.
• Parts with "◉" indicates the Service parts.

• Parts with "• •" are component parts or sub-assembly with "•" appearing immediately above them.

FIG. 31 EXTERIOR COVERS (SRDF)

2A3/2A4

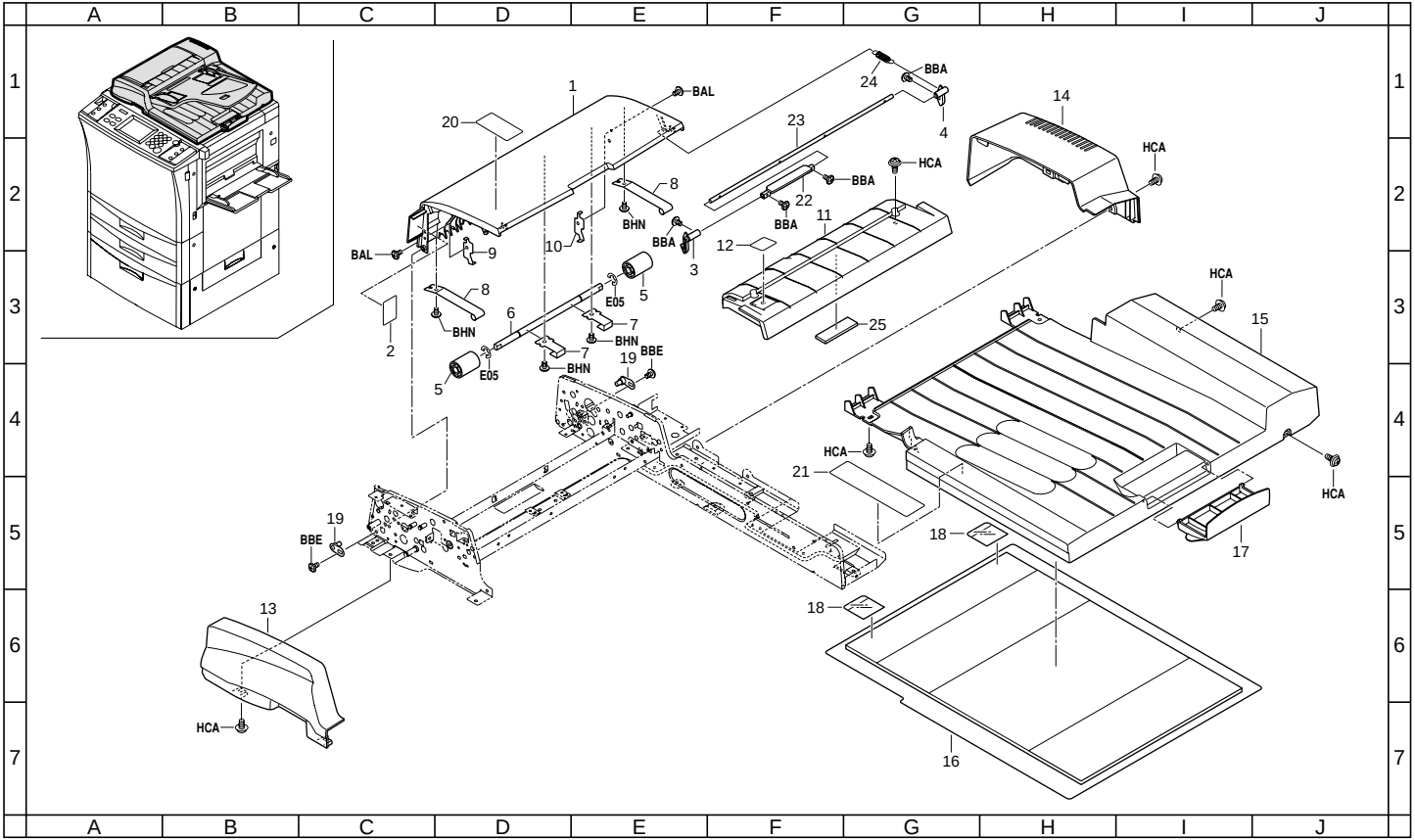

FIG. 31 EXTERIOR COVERS (SRDF)

SP	Ref. No.	Part. No.	Description	Quantity		
				230V	240V	120V
◉	1	3AL04120	LEFT COVER(K M)	1	1	1
◉	2	3AL05090	LABEL,JAM REMOVEMENT	1	1	1
	3	3AL07260	FRONT HOOK,LEFT COVER	1	1	1
	4	3AL07270	REAR HOOK,LEFT COVER	1	1	1
◉	5	3AL08140	UPPER PULLEY,CONVEYING	2	2	2
	6	3AL08180	UPPER SHAFT,CONVEYING PULLEY	1	1	1
	7	3AL08220	UPPER PLATE SPRING,CONVEYING PULLEY	2	2	2
	8	3AL08270	PLATE SPRING,REGISTRATION GUIDE	2	2	2
	9	3AL08360	STOPPER,LEFT COVER FRONT	1	1	1
	10	3AL08370	STOPPER,LEFT COVER REAR	1	1	1
◉	11	3AL04130	COVER,PAPER FEED(K M)	1	1	1
◉	12	3AL05080	LABEL,ORIGINAL SET	1	1	1
◉	13	3AL04090	FRONT COVER(K M)	1	1	1
	14	3AL04100	REAR COVER(K M)	1	1	1
◉	15	3AL04110	RIGHT COVER(K M)	1	1	1
	16	3AL04060	MAT,ORIGINAL HOLDER	1	1	1
◉	17	3AL04140	STOPPER,EJECT ORIGINAL(K M)	1	1	1
◉	18	3AL04080	FILM,ORIGINAL HOLDER	2	2	2
	19	63202120	SUPPORT PLATE,COVER	2	2	2
◉	20	3AL05100	LABEL,ORIGINAL INDICATION (EUR)	1	1	0
◉	20	18305020	LABEL,ORIGINAL INDICATION (USA)	0	0	1
◉	21	3AL05111	LABEL,OPERATION	1	1	1
◉	22	3AL04150	HANDLE,HOOK(K M)	1	1	1
	23	3AL07290	SHAFT,HOOK	1	1	1
◉	24	72118141	SPRING,CLEANING BLADE	1	1	1
	25	29407610	SPONGE,MOTOR PF	1	1	1
◉	26	3AL08500	PULLEY,REGISTRATION	2	2	2

• Parts with "•" are component parts or sub-assemblies of the assembly appearing immediately above them.
• Parts with "◉" indicates the Service parts.

• Parts with "• •" are component parts or sub-assembly with "•" appearing immediately above them.

FIG. 32 FRAMES (SRDF)

2A3/2A4

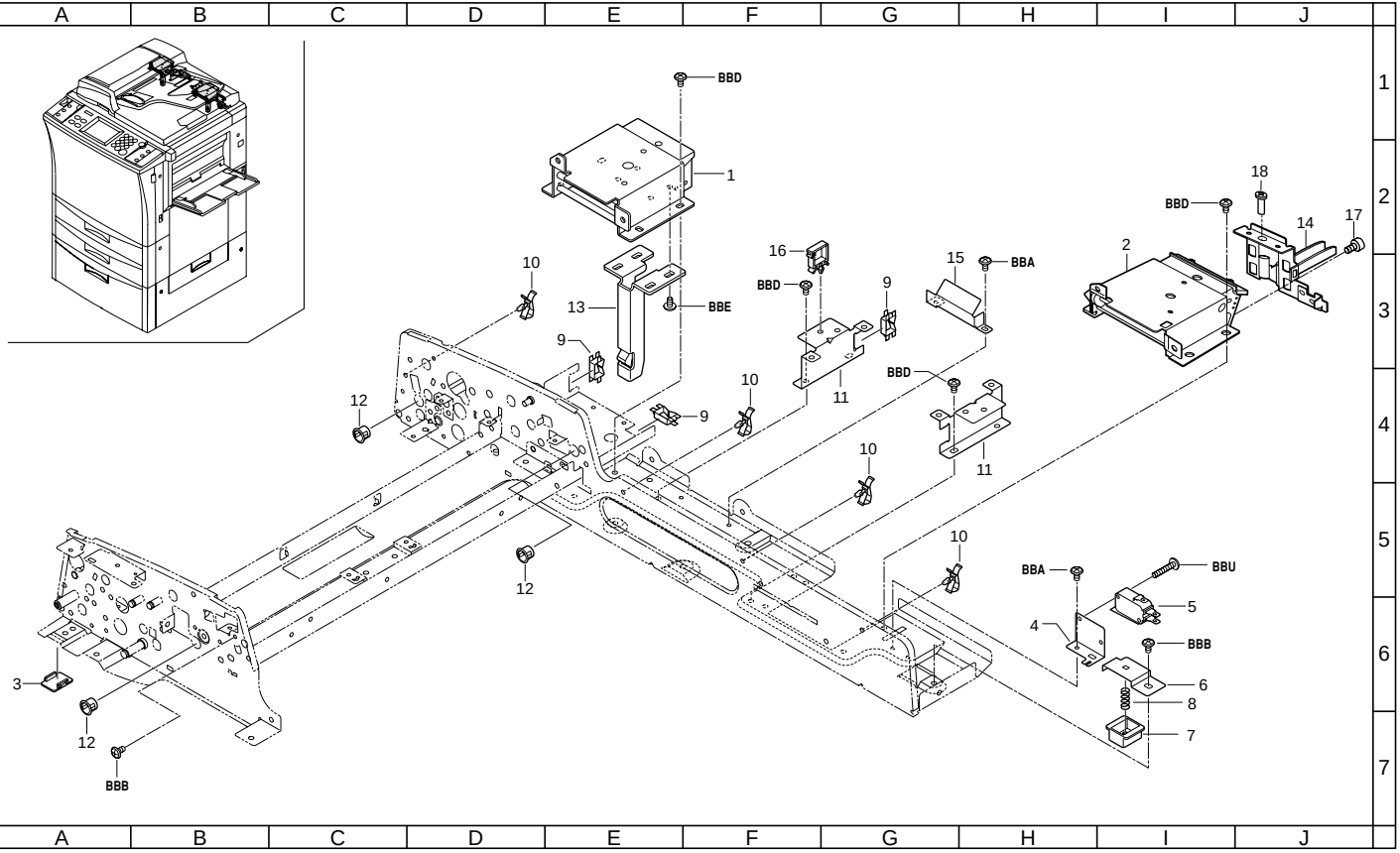

FIG. 32 FRAMES (SRDF)

SP	Ref. No.	Part. No.	Description	Quantity		
				230V	240V	120V
	1	3AL03012	LEFT HINGE	1	1	1
	2	3AL03023	RIGHT HINGE	1	1	1
	3	3AL02200	SPACER,SRDF	1	1	1
	4	3AL02050	MOUNT,RELEASE SWITCH	1	1	1
	5	36827140	SWITCH A,INTERLOCK	1	1	1
	6	3AL02080	HOLDER,SPRING	1	1	1
	7	3AL02070	STOPPER,ORIGINAL DETECTION SWITCH	1	1	1
◉	8	35911731	SPRING,EJECT PULLEY ADF	1	1	1
	9	M2104200	EDGING EDS-1	3	3	3
	10	M2109260	WIRE SADDLE,YMC-05-H-0(KITAGAWA)	4	4	4
	11	3AL02060	MOUNT,DF PCB	2	2	2
	12	M1203200	OPEN BUSHING,OCB-375	3	3	3
	13	3AL03031	LEFT STAY,HINGE	1	1	1
	14	3AL03043	RIGHT STAY,HINGE	1	1	1
	15	3AL02100	GUIDE,INTERFACE WIRE	1	1	1
	16	M2109230	WIRE SADDLE,LWS-3S(KITAGAWA)	1	1	1
	17	29820110	FRONT PIN,FULCRUM	4	4	4
	18	3AL03050	PIN,HINGE ADJUSTMENT(M)	1	1	1

• Parts with "•" are component parts or sub-assemblies of the assembly appearing immediately above them.
• Parts with "◉" indicates the Service parts.

• Parts with "• •" are component parts or sub-assembly with "•" appearing immediately above them.

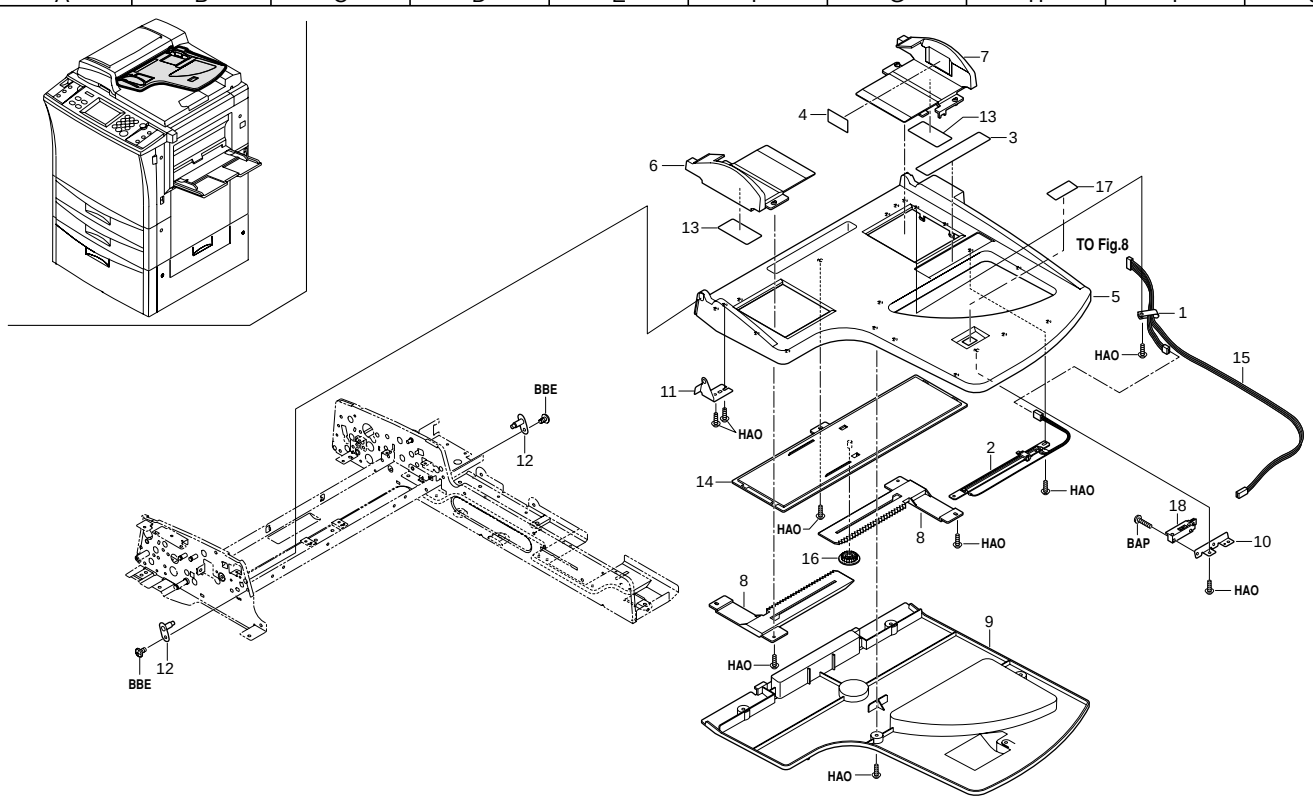
A B C D E F G H I J
1 2 3 4 5 6 7
7
4
13
3
6
13
17
TO Fig.8
5
1
HAO
15
11
HAO
14
2
HAO
HAO
8
HAO
16
18
BAP
10
HAO
8
9
HAO
HAO
BBE
12
12
BBE

FIG. 33 TABLE SECTION (SRDF)

SP	Ref. No.	Part. No.	Description	Quantity		
				230V	240V	120V
	1	M2105000	NYLON CLAMP 2N,NK-2N	1	1	1
	2	18327100	SWITCH,SIZE DETECTION	1	1	1
◉	3	3AL05040	LABEL,ORIGINAL SIZE(METRIC)	1	1	1
	3	3AL05050	LABEL,ORIGINAL SIZE(INCH)	0	0	1
◉	4	3AL05060	LABEL,ORIGINAL CURSOR(METRIC)	1	1	1
	4	3AL05070	LABEL,ORIGINAL CURSOR(INCH)	0	0	1
◉	5	3AL06120	TABLE,ORIGINAL(K M)	1	1	1
◉	6	3AL06130	FRONT GUIDE,ORIGINAL(K M)	1	1	1
◉	7	3AL06140	REAR GUIDE,ORIGINAL(K M)	1	1	1
◉	8	3AL06041	RACK,TABLE	2	2	2
◉	9	3AL06052	COVER,TABLE	1	1	1
	10	3AL06060	MOUNT,SIZE DETECTION	1	1	1
	11	3AL06072	FRONT SUPPORT PLATE,TABLE	1	1	1
	12	3AL06102	FULCRUM PIN,TABLE	2	2	1
	13	3AL06090	CUSHION,ORIGINAL GUIDE	2	2	2
◉	14	3AL06150	COVER,ORIGINAL GUIDE(K M)	1	1	1
	15	3AL27030	WIRE,TABLE	1	1	1
◉	16	65907210	GEAR 20,CASSETTE	1	1	1
	17	78706241	FILTER CF SENSOR	1	1	1
	18	78727110	JAM DETECTION SWITCH	1	1	1

• Parts with "•" are component parts or sub-assemblies of the assembly appearing immediately above them.
• Parts with "◉" indicates the Service parts.

• Parts with "• •" are component parts or sub-assembly with "•" appearing immediately above them.

FIG. 34 PAPER FEED SECTION (SRDF)

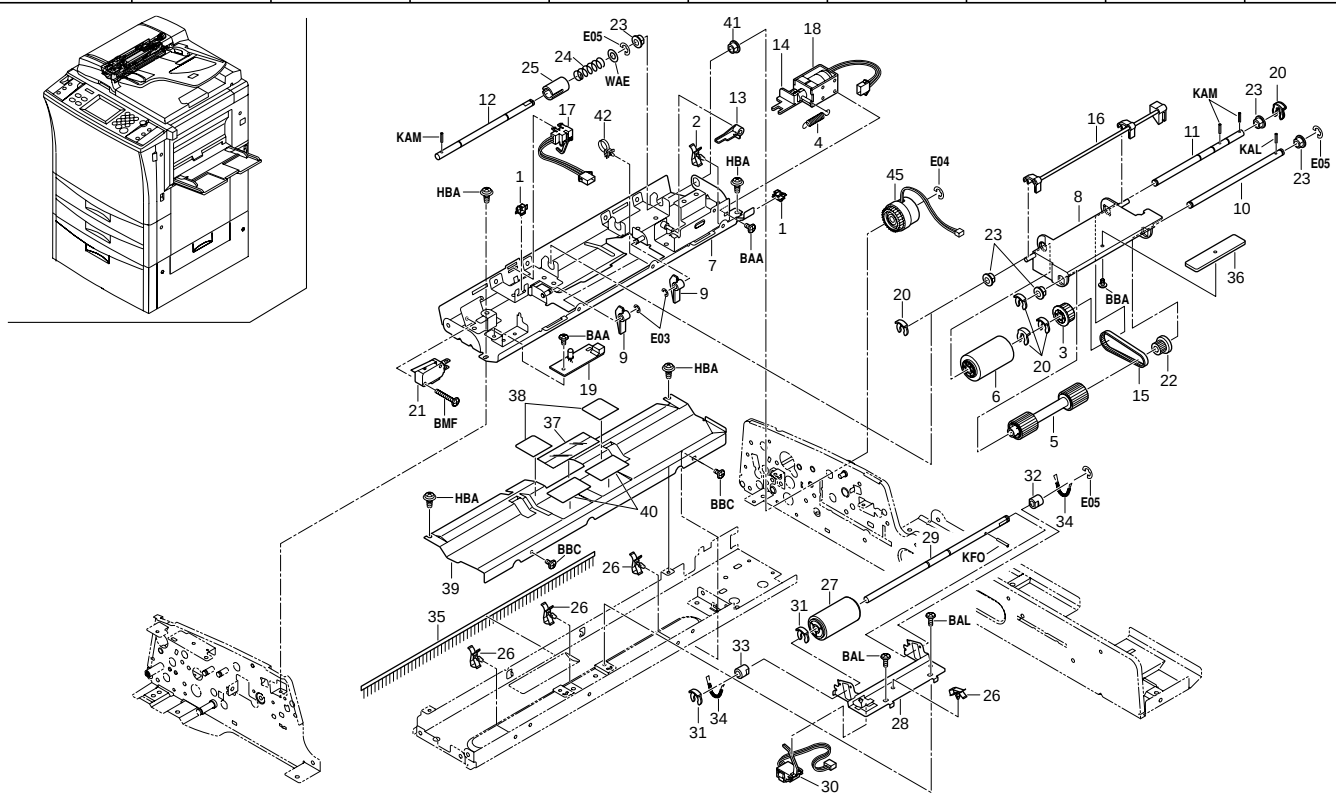

FIG. 34 PAPER FEED SECTION (SRDF)

SP	Ref. No.	Part. No.	Description	Quantity		
				230V	240V	120V
	1	M2104350	EDGING,EDS-0607M(KITAGAWA)	2	2	2
	2	M2109330	WIRE SADDLE,YMC-10-0(KITAGAWA)	1	1	1
◉	3	18312100	PULLEY 28,EJECT DRIVE	1	1	1
◉	4	29812050	SPRING,WIRE ROPE	1	1	1
◉	5	3AL07010	PULLEY,LEADING FEED	1	1	1
◉	6	3AL07020	PULLEY,PAPER FEED	1	1	1
	7	3AL07040	UPPER GUIDE,PAPER FEED	1	1	1
	8	3AL07060	ARM,LEADING FEED	1	1	1
	9	3AL07070	STOPPER,ORIGINAL	2	2	2
	10	3AL07100	SHAFT,LEADING FEED	1	1	1
	11	3AL07110	FRONT SHAFT,PAPER FEED	1	1	1
	12	3AL07120	REAR SHAFT,PAPER FEED	1	1	1
	13	3AL07160	LEVER,LIFT	1	1	1
◉	14	3AL07180	JOINT,LIFT SOLENOID	1	1	1
◉	15	3AK08360	BELT,LEADING FEED	1	1	1
	16	3AL07220	STOPPER,ORIGINAL STOPPER	1	1	1
	17	3AL27060	SWITCH,FEED	1	1	1
◉	18	3AL27070	SOLENOID,LEADING FEED	1	1	1
◉	19	3AL28020	SET LED PCB	1	1	1
	20	34806150	STOPPER 5	7	7	7
	21	36827140	SWITCH A,INTERLOCK	1	1	1
◉	22	65722250	PULLEY 20,EJECT	1	1	1
	23	73210450	BUSH, 6	5	5	5
	24	73818100	SPRING, BLADE THRUST	1	1	1
	25	74306520	JOINT,PULLEY DRIVE SHAFT	1	1	1
	26	M2109260	WIRE SADDLE,YMC-05-H-0(KITAGAWA)	4	4	4
◉	27	3AL07031	PULLEY,SEPARATION	1	1	1
	28	3AL07081	MOUNT,SEPARATION PULLEY	1	1	1
	29	3AL07130	SHAFT,SEPARATION	1	1	1
	30	3AL27050	SWITCH,ORIGINAL SET	1	1	1
◉	31	3AL93010	PARTS,CLUTCH PAPER FEED,SP	1	1	1
◉	32	65011360	BUSHING 6,LOOP	1	1	1
	33	72107160	BUSHING 6,LOWER REGISTRATION ROLLER	1	1	1
	34	3AL07320	SPRING,SEPARATION	2	2	2
◉	35	63212210	STATIC ELIMINATOR,EJECT	1	1	1
	36	3AL07300	WEIGHT,LEADING FEED	1	1	1
◉	37	3AL07310	FILM,SEPARATION	1	1	1
◉	38	3AL07330	PAD,SEPARATION	2	2	2
	39	3AL07051	LOWER GUIDE,PAPER FEED	1	1	1
	40	78707580	FELT ORIGINAL FEED	2	2	2
◉	41	73210450	BUSH, 6	1	1	1
	42	M2107120	BINDING BAND SG-130	2	2	2

• Parts with "•" are component parts or sub-assemblies of the assembly appearing immediately above them.
• Parts with "◉" indicates the Service parts.

• Parts with "• •" are component parts or sub-assembly with "•" appearing immediately above them.

FIG. 35 REVERSING SECTION (SRDF)

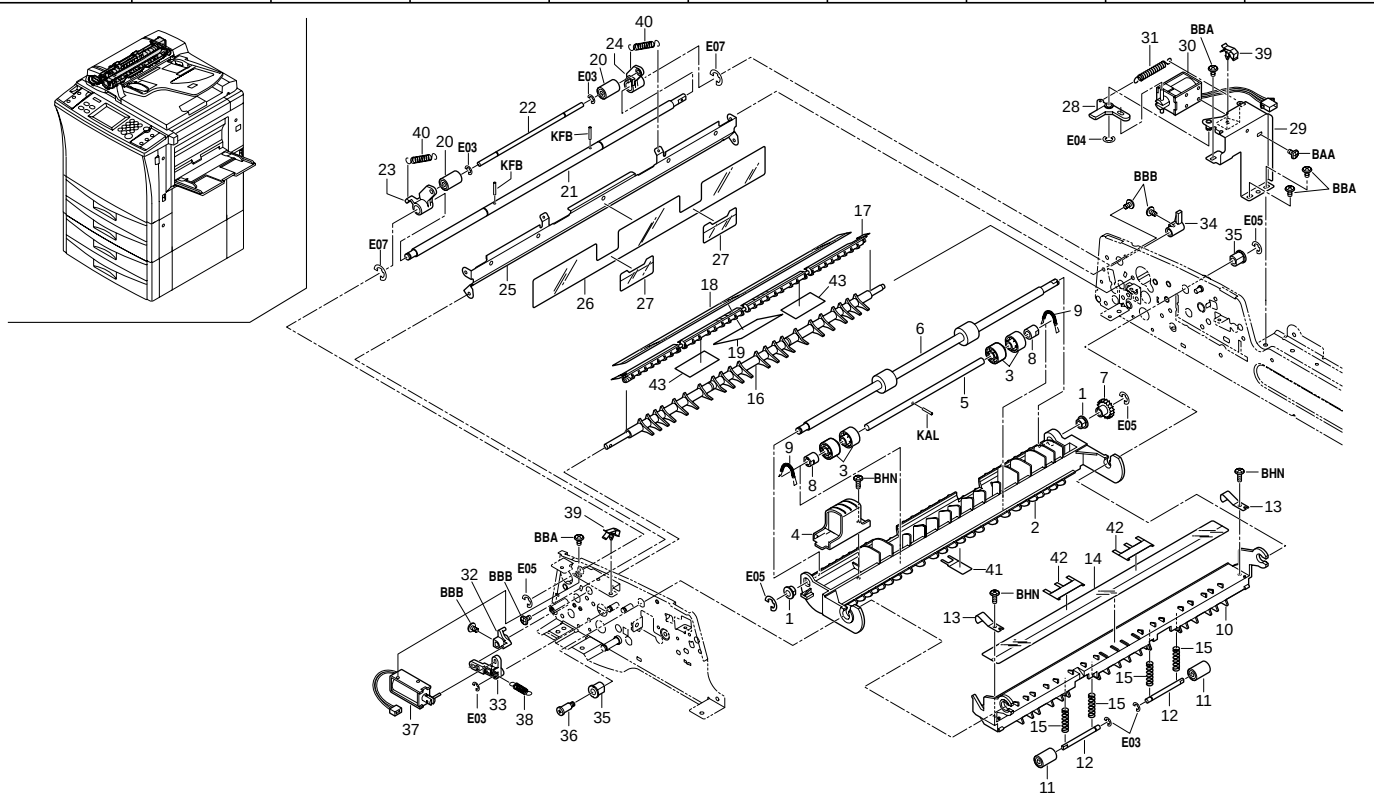

FIG. 35 REVERSING SECTION (SRDF)

SP	Ref. No.	Part. No.	Description	Quantity		
				230V	240V	120V
◉	1	29806560	BUSHING 6	2	2	2
	2	3AL08051	GUIDE,REGISTRATION	1	1	1
◉	3	3AL08500	PULLEY,REGISTRATION	4	4	4
	4	3AL08380	HANDLE,REGISTRATION GUIDE	1	1	1
	5	3AL08470	SHAFT,REGISTRATION PULLEY	1	1	1
◉	6	3AL10020	ROLLER,LOOP	1	1	1
◉	7	33918100	GEAR 18,FUR BRUSH	1	1	1
	8	72107160	BUSHING 6,LOWER REGISTRATION ROLLER	2	2	2
	9	77706461	PRESSING SPRING	2	2	2
	10	3AL08061	GUIDE,EJECT	1	1	1
	11	3AL08170	PULLEY,EJECT	2	2	2
	12	3AL08210	SHAFT,EJECT PULLEY	2	2	2
	13	3AL08260	PLATE SPRING,EJECT GUIDE	2	2	2
◉	14	3AL08410	SHEET,GUIDE EJECT	1	1	1
	15	3AL08560	SPRING,EJECT PULLEY	4	4	4
	16	3AL10031	GUIDE,LOOP FEED SHIFT	1	1	1
	17	3AL10165	LEFT GUIDE,LOOP	1	1	1
◉	18	3AL10181	LEFT SHEET,GUIDE LOOP	1	1	1
◉	19	3AL10280	LOWER LEFT SHEET B,GUIDE LOOP	1	1	1
◉	20	3AL08170	PULLEY,EJECT	2	2	2
	21	3AL10040	SHAFT,FULCRUM PULLEY	1	1	1
	22	3AL10060	SHAFT,LOOP PULLEY	1	1	1
	23	3AL10120	FRONT HOLDER,LOOP PULLEY	1	1	1
	24	3AL10200	REAR HOLDER,LOOP PULLEY	1	1	1
	25	3AL10011	GUIDE,LOOP	1	1	1
◉	26	3AL10170	SHEET,GUIDE LOOP	1	1	1
◉	27	3AL10210	SHEET,LOOP PULLEY	2	2	2
	28	3AL10091	LEVER,LOOP PULLEY SOLENOID	1	1	1
	29	3AL10143	MOUNT,LOOP PULLEY SOLENOID	1	1	1
◉	30	3AL27111	SOLENOID,LOOP PULLEY	1	1	1
	31	3AL10230	SPRING,LOOP PULLEY SOLENOID	1	1	1
	32	3AL10081	LEVER,LOOP FEED SHIFT	1	1	1
	33	3AL10110	LEVER,LOOP FEED SHIFT SOLENOID	1	1	1
	34	3AL10100	LEVER,LOOP PULLEY	1	1	1
◉	35	60606101	BUSHING FEED BACK ROLLER	2	2	2
	36	3AL07230	PIN,PAPER FEED	1	1	1
◉	37	3AL27080	SOLENOID,FEED SHIFT	1	1	1
◉	38	3AL08490	SPRING,EJECT FEED SHIFT	1	1	1
	39	M2109260	WIRE SADDLE,YMC-05-H-0(KITAGAWA)	2	2	2
	40	63526080	SPRING,SAFETY SWITCH LEVER	2	2	2
◉	41	3AL08510	SHEET,GUIDE REGISTRATION	1	1	1
◉	42	3AL08520	SHEET,REGISTRATION	2	2	2
◉	43	3AL08590	UPPER SHEET B,CONVEYING PULLEY	2	2	2

• Parts with "•" are component parts or sub-assemblies of the assembly appearing immediately above them.
• Parts with "◉" indicates the Service parts.

• Parts with "• •" are component parts or sub-assembly with "•" appearing immediately above them.

FIG. 36 CONVEYING SECTION (SRDF)

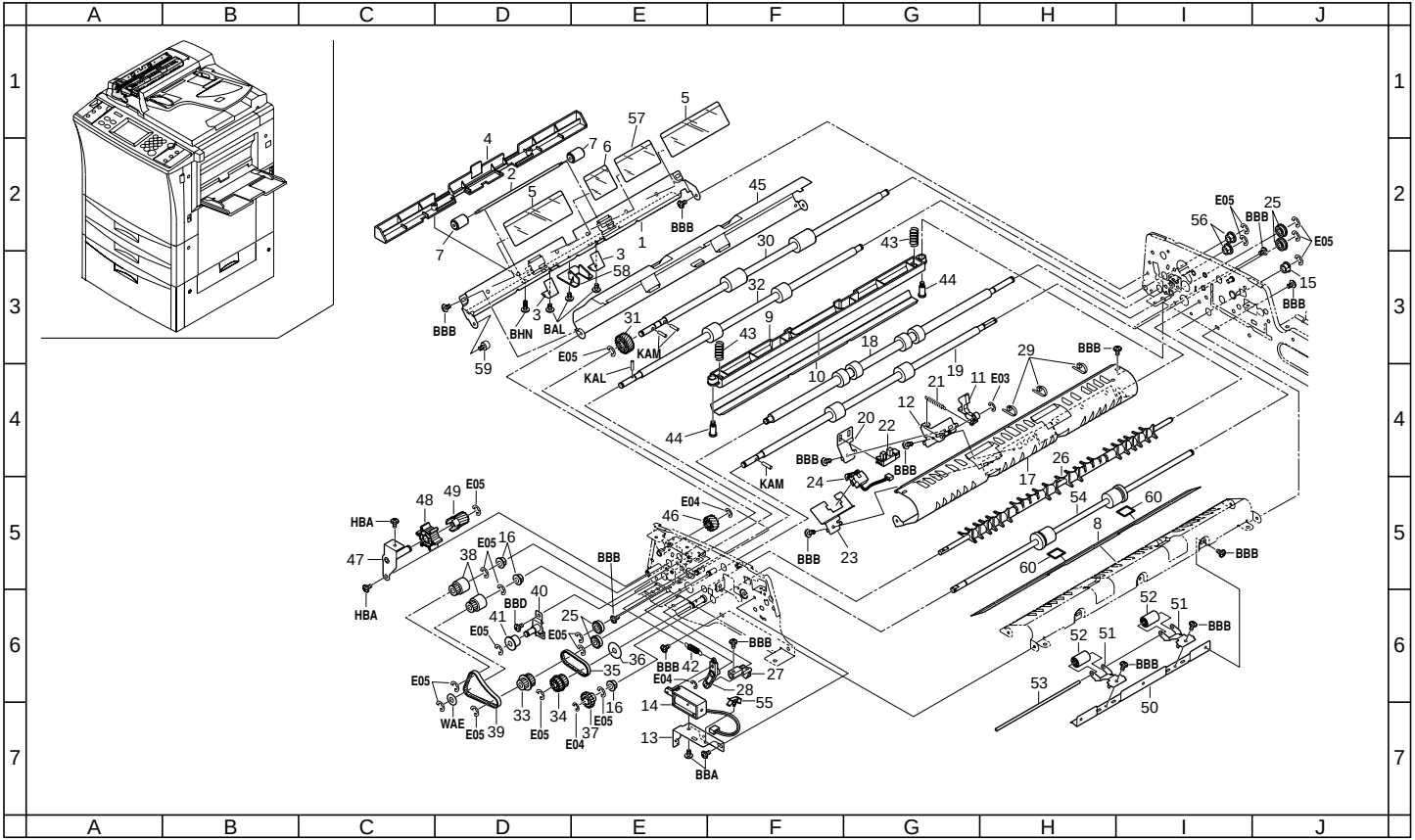

FIG. 36 CONVEYING SECTION (SRDF)

2A3/2A4

SP	Ref. No.	Part. No.	Description	Quantity		
				230V	240V	120V
	1	3AL08033	GUIDE,CONVEYING	1	1	1
	2	3AL08190	LOWER SHAFT,CONVEYING PULLEY	1	1	1
	3	3AL08240	LOWER PLATE SPRING,CONVEYING PULLEY	2	2	2
◉	4	3AL08302	COVER,CONVEYING PULLEY	1	1	1
◉	5	3AL08421	OUTER SHEET,GUIDE CONVEYING	2	2	2
◉	6	3AL08430	INNER SHEET,GUIDE CONVEYING	1	1	1
◉	7	3AL08480	FRONT PULLEY,READING	2	2	2
◉	8	3AL08450	SHEET,GUIDE PLATE EJECT	1	1	1
	9	3AL08072	GUIDE,READING	1	1	1
◉	10	3AL08401	SHEET,ORIGINAL HOLDER	1	1	1
	11	3AL10072	LIGHT SHIELD,LOOP	1	1	1
	12	3AL10131	MOUNT,LIGHT SHIELD	1	1	1
	13	3AL08310	MOUNT,EJECT SOLENOID	1	1	1
◉	14	3AL27080	SOLENOID,FEED SHIFT	1	1	1
◉	15	63806290	BUSHING,6	1	1	1
◉	16	73210450	BUSH, 6	3	3	3
	17	3AL08021	RIGHT GUIDE,REGISTRATION	1	1	1
◉	18	3AL08091	ROLLER,REGISTRATION	1	1	1
◉	19	3AL08122	INNER ROLLER,CONVEYING	1	1	1
	20	3AL10151	MOUNT,LOOP SWITCH	1	1	1
	21	3AL10190	SPRING,LIGHT SHIELD	1	1	1
◉	22	63527240	PI,GP1A71A	1	1	1
	23	3AL08291	MOUNT,TIMING SWITCH	1	1	1
	24	3AL27120	SWITCH,TIMING	1	1	1
◉	25	3AL22140	BUSHING 686	4	4	4
	26	3AL08080	GUIDE,EJECT FEED SHIFT	1	1	1
	27	3AL08330	LEVER,EJECT	1	1	1
	28	3AL08341	LEVER,EJECT SOLENOID	1	1	1
	29	M0207000	BINDING BAND,KB-100-1	3	3	3
◉	30	3AL08161	UPPER ROLLER,CONVEYING	1	1	1
◉	31	3AL02150	GEAR 24,JAM REMOVEMENT	1	1	1
◉	32	3AL08112	LOWER ROLLER,CONVEYING	1	1	1
◉	33	18307370	PULLEY 25/18P2M,PAPER FEED	1	1	1
◉	34	3AL22040	GEAR Z18/T25P2M	1	1	1
◉	35	3AL22130	BELT 100,CONVEYING	1	1	1
	36	75714210	COLLAR DEVELOPING UNIT	1	1	1
◉	37	33918100	GEAR 18,FUR BRUSH	1	1	1
◉	38	18307550	PULLEY 18P2M,LEADING FEED	2	2	2
◉	39	3AL22070	BELT 140,MIDDLE ROLLER	1	1	1
	40	3AL22080	TENSION PLATE,MIDDLE ROLLER BELT	1	1	1
◉	41	48928800	PULLEY,TIMING BELT	1	1	1
	42	63814260	SPRING,DEV. SHUTTER	1	1	1
	43	72418480	SPRING, SPIRAL ROLLER	2	2	2
	44	3AL07230	PIN,PAPER FEED	2	2	2
	45	3AL08013	LEFT GUIDE,REGISTRATION	1	1	1
◉	46	3AL02160	GEAR 14,JAM REMOVEMENT	1	1	1
	47	3AL02121	MOUNT,JAM REMOVEMENT DIAL	1	1	1
	48	3AL02110	DIAL,JAM REMOVEMENT	1	1	1
◉	49	3AL02170	GEAR 14,JOINT	1	1	1
	50	3AL08280	MOUNT,CONVEYING PULLEY	1	1	1
	51	3AL08250	INNER PLATE SPRING,CONVEYING PULLEY	2	2	2
◉	52	3AL08100	INNER PULLEY,CONVEYING	2	2	2
	53	3AL08200	INNER SHAFT,CONVEYING PULLEY	1	1	1
◉	54	3AL08130	ROLLER,EJECT	1	1	1
	55	M2109260	WIRE SADDLE,YMC-05-H-0(KITAGAWA)	1	1	1
◉	56	29806560	BUSHING 6	2	2	2
◉	57	3AL08530	INNER SHEET,GUIDE CONVEYING LARGE	1	1	1
	58	3AL08570	GUIDE,TIMING SWITCH	1	1	1
	59	63511541	PIN,ADF	1	1	1

• Parts with "•" are component parts or sub-assemblies of the assembly appearing immediately above them.
• Parts with "◉" indicates the Service parts.

• Parts with "• •" are component parts or sub-assembly with "•" appearing immediately above them.

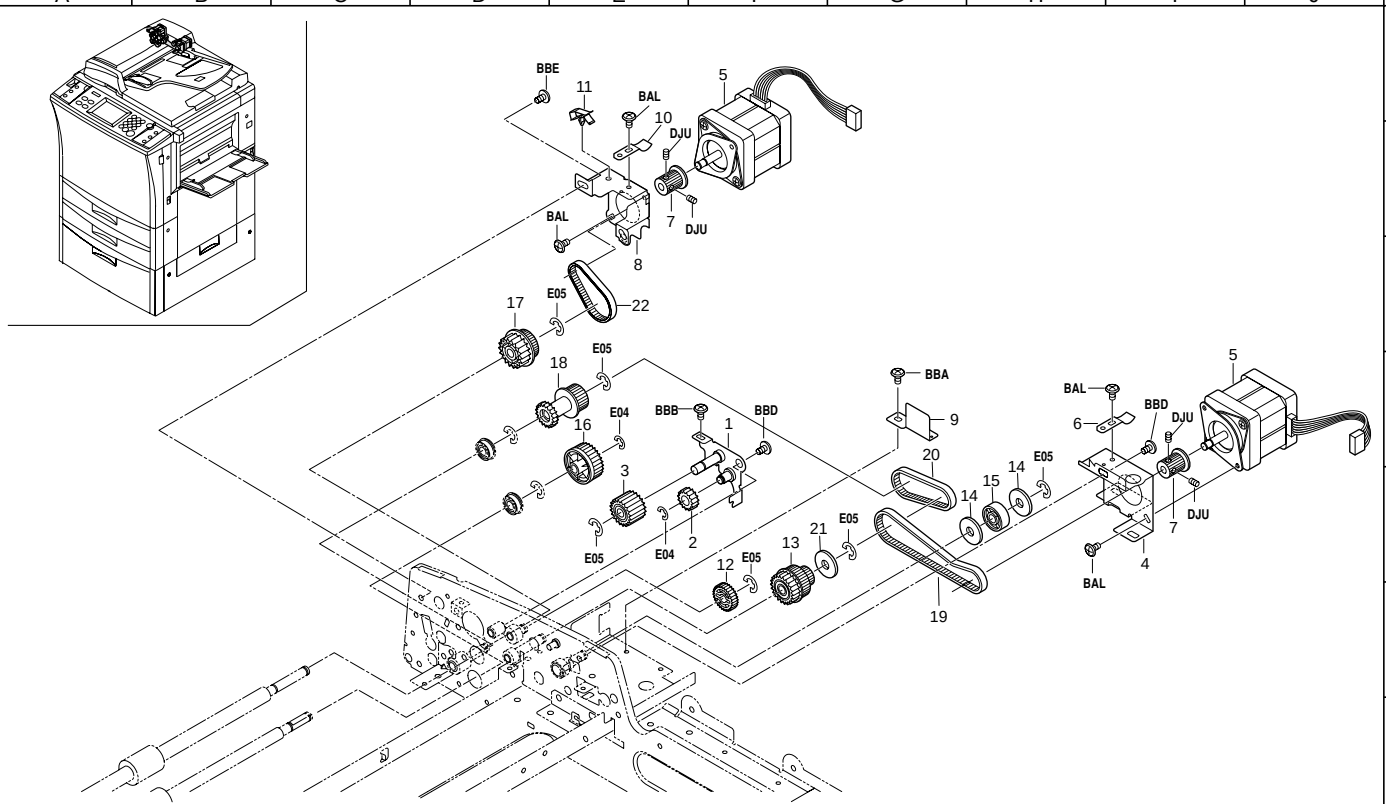
A
B
C
D
E
F
G
H
I
J
1
2
3
4
5
6
7
BBE
11
BAL
10
DJU
5
7
DJU
BAL
8
17
E05
22
18
E05
16
E04
BBB
1
BBD
3
E05
E04
2
12
E05
13
21
E05
BBA
9
20
14
15
14
E05
19
BAL
6
BBD
DJU
5
7
DJU
4
BAL

FIG. 37 DRIVING SECTION (SRDF)

SP	Ref. No.	Part. No.	Description	Quantity		
				230V	240V	120V
	1	3AL22090	MOUNT,IDLE GEAR	1	1	1
◉	2	63814100	IDLE GEAR 15,AGITATION	1	1	1
◉	3	65011310	GEAR 20,IDLE	1	1	1
	4	3AL22101	MOUNT,PAPER FEED MOTOR	1	1	1
◉	5	3AL27011	MOTOR,PAPER FEED	2	2	2
	6	34920190	GROUND PLATE,FIXING UNIT	1	1	1
◉	7	78722151	PULLEY 20	2	2	2
	8	3AL22111	MOUNT,CONVEYING MOTOR	1	1	1
	9	3AL02190	GUIDE B,WIRE PAPER FEED MOTOR	1	1	1
	10	34920190	GROUND PLATE,FIXING UNIT	1	1	1
	11	M2109260	WIRE SADDLE,YMC-05-H-0(KITAGAWA)	1	1	1
◉	12	66018180	GEAR 26,SPIRAL ROLLER	1	1	1
◉	13	3AL22010	PULLEY T35/T22/Z22	1	1	1
	14	71602201	SPACER,SHIFT LEVER	2	2	2
◉	15	65907300	PULLEY,CASSETTE	1	1	1
◉	16	76221040	GEAR 28 FD	1	1	1
◉	17	3AL22030	GEAR Z22/T35P2M	1	1	1
◉	18	3AL22020	PULLEY T28/Z18	1	1	1
◉	19	3AL22050	BELT 190,PAPER FEED MOTOR	1	1	1
◉	20	3AL22060	BELT 112,REGISTRATION ROLLER	1	1	1
	21	75714210	COLLAR DEVELOPING UNIT	1	1	1
◉	22	3AL22130	BELT 100,CONVEYING	1	1	1

• Parts with "•" are component parts or sub-assemblies of the assembly appearing immediately above them.
• Parts with "◉" indicates the Service parts.

• Parts with "• •" are component parts or sub-assembly with "•" appearing immediately above them.

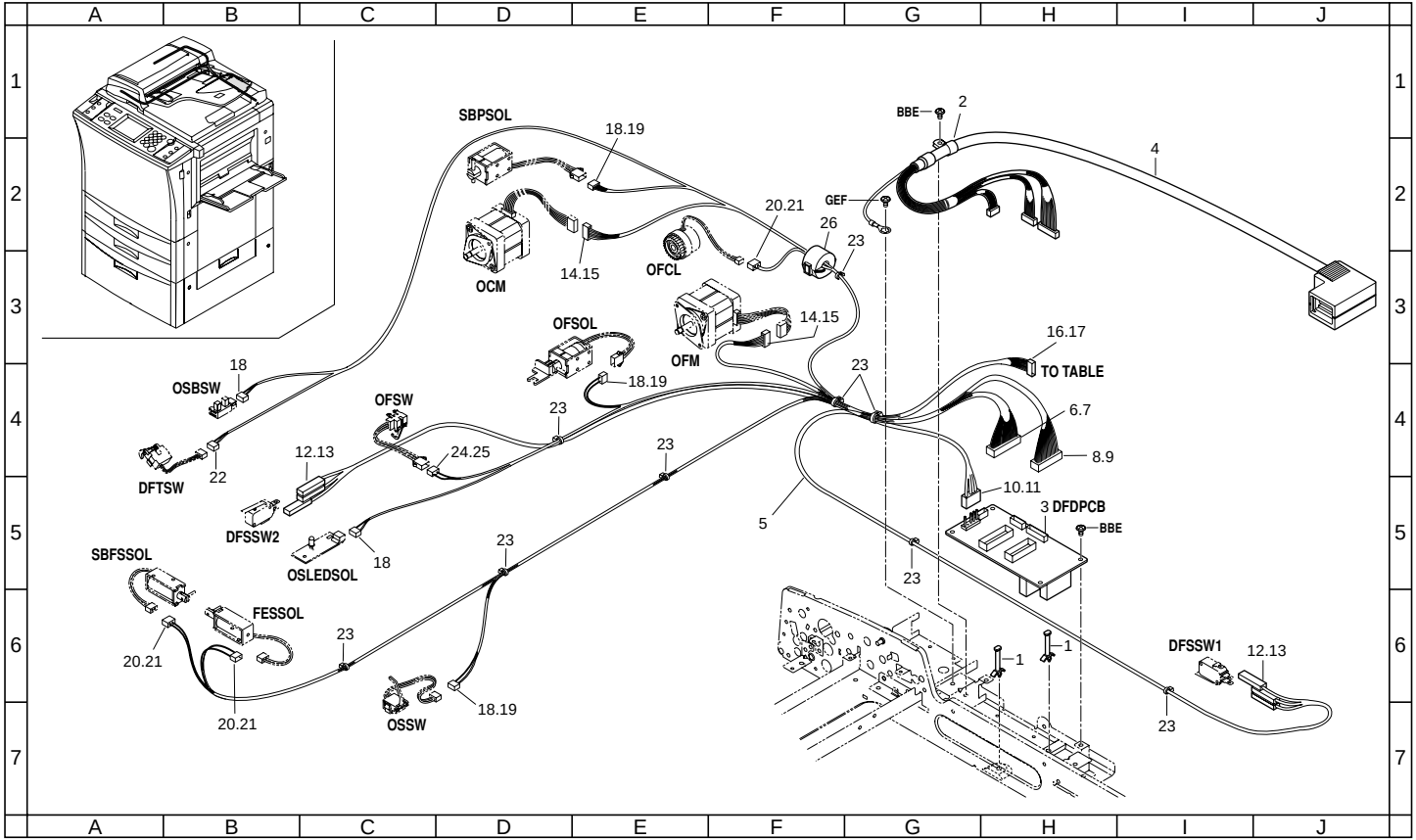
A
B
C
D
E
F
G
H
I
J
1
2
3
4
5
6
7
SBPSOL
18.19
OCM
14.15
OFCL
20.21
26
23
BBE
2
GEF
4
OFSOL
OFM
14.15
16.17
TO TABLE
18
OSBSW
18.19
OFSW
23
6.7
8.9
DFTSW
22
12.13
24.25
10.11
3 DFDPCB
BBE
DFSSW2
18
OSLEDSOL
SBFSSOL
FESSOL
20.21
20.21
OSSW
18.19
1
1
DFSSW1
12.13
23

FIG. 38 ELECTRICAL SECTION (SRDF)

SP	Ref. No.	Part. No.	Description	Quantity		
				230V	240V	120V
	1	M2108900	SPACER,KGPS-16S(KITAGAWA)	2	2	2
	2	M2105040	NYLON CLAMP 6N,NK-6N	1	1	1
◉	3	3AL93020	PARTS,DRIVER PCB,SP	1	1	1
	4	3AL27040	WIRE,INTERFACE	1	1	1
	5	3AL27020	WIRE,PAPER FEED	1	1	1
	6	•J0149300	CASE,3-175133-0(AMP)	1	1	1
	7	•J0140150	RECEPTACLE,1-173977-5(AMP)	2	2	2
	8	•J0149260	CASE,2-175133-6(AMP)	1	1	1
	9	•J0140130	RECEPTACLE,1-173977-3(AMP)	2	2	2
	10	•J0301040	RECEPTACLE 4P,5196-04	1	1	1
	11	•J0300900	SOCKET,5194TL	4	4	4
	12	•J0070030	POSITIVE CONNECTOR HOUSING 3P,#187,17207	2	2	2
	13	•J0070900	POSITIVE CONTACTOR,#187,170330-1	6	6	6
	14	•J0140060	RECEPTACLE MT 6P,173977-6	2	2	2
	15	•J0144060	CASE,175694-6(AMP)	2	2	2
	16	•J0141060	RECEPTACLE,2-173977-6(AMP)	1	1	1
	17	•J0143060	CASE,2-175694-6(AMP)	1	1	1
	18	•J0140030	RECEPTACLE,173977-3(AMP)	5	5	5
	19	•J0144030	CASE,175694-3(AMP)	3	3	3
	20	•J0144030	CASE,175694-3(AMP)	3	3	3
	21	•J0144020	CASE,175694-2(AMP)	3	3	3
	22	•J0145030	RECEPTACLE,6-173977-3(AMP)	1	1	1
	23	•M0207000	BINDING BAND,KB-100-1	9	9	9
	24	•J0141030	RECEPTACLE,2-173977-3(AMP)	1	1	1
	25	•J0143030	CASE,2-175694-3(AMP)	1	1	1
	26	65027470	CORE,7-15X18	3	3	3

• Parts with "•" are component parts or sub-assemblies of the assembly appearing immediately above them.
• Parts with "◉" indicates the Service parts.

• Parts with "• •" are component parts or sub-assembly with "•" appearing immediately above them.

FIG. 39 EXTERIOR COVERS (PAPER FEED DECK) (KM-5230) 2A4

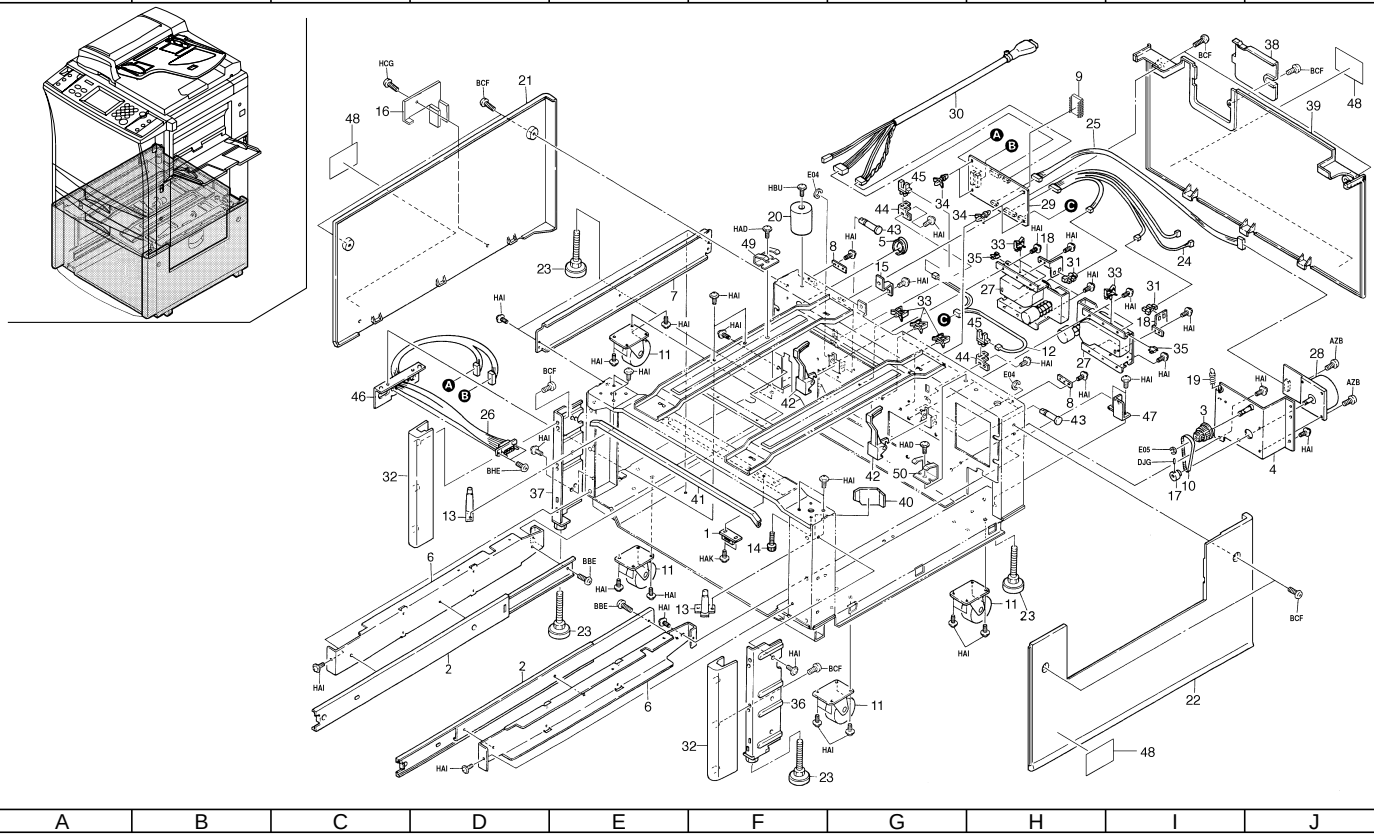

FIG. 39 EXTERIOR COVERS (PAPER FEED DECK) (KM-5230)

SP	Ref. No.	Part. No.	Description	Quantity		
				230V	240V	120V
	1	36707740	MAGNET,DECK	1	1	1
	2	36707750	SLIDER,DECK	2	2	2
	3	54106250	P2M43-G20	1	1	1
	4	53310510	ASS'Y BKT-H-MOT-K	1	1	1
	5	M1203230	OPEN BUSHING,OCB-750	1	1	1
	6	54106500	SLIDER PLATE	2	2	2
	7	54106510	LEFT SIDE PLATE	1	1	1
	8	54107140	PLT-TAP	2	2	2
◉	9	53310540	ROM ASS'Y	1	1	1
◉	10	54106750	BELT-S2M-180-6	1	1	1
	11	54106800	CASTER	4	4	4
	12	53310010	ZAN HARNESS ASSY	1	1	1
	13	53310520	ASS'Y POSITIONING PIN	2	2	2
	14	53310500	PIN(M6X40)	1	1	1
	15	68202090	RETAINER,DESK	1	1	1
	16	53307090	RETAINER,CASTER	1	1	1
	17	54107110	PULLEY-S2M-18	1	1	1
◉	18	54106390	PLATE-R MOTOR SENSOR	2	2	2
	19	54107150	SP-H-MOT	1	1	1
	20	66102140	BASE,RUBBER	1	1	1
◉	21	54104020	LEFT COVER	1	1	1
◉	22	54104030	RIGHT COVER	1	1	1
	23	53310040	ADJUSTER BOLT	4	4	4
	24	54126010	E MOTOR HARNESS ASS'Y	1	1	1
	25	54126020	H MOTOR HARNESS ASS'Y	1	1	1
	26	36707760	WIRE,DECK	1	1	1
◉	27	36707770	MOTOR,DECK	2	2	2
◉	28	54126120	PAPER CONVEYING MOTOR	1	1	1
◉	29	54128010	MAIN PCB SUB ASS'Y	1	1	1
	30	53310530	I/F HARNESS ASS'Y 68A(EXP)	1	1	1
◉	31	54126170	PI SENSOR	2	2	2
◉	32	53304040	SIDE FRONT COVER STD	2	2	2
	33	M2109000	WIRE SADDLE,WS-1NS	5	5	5
	34	M2108140	SPACER,KGLS-6S	4	4	4
	35	M2104260	EDGING,EDS-0607U(KITAGAWA)	2	2	2
	36	53302010	RIGHT MOUNT,SIDE FRONT COVER	1	1	1
	37	53302020	LEFT MOUNT,SIDE FRONT COVER	1	1	1
◉	38	68204052	COVER,CONNECTOR	1	1	1
◉	39	53304030	REAR COVER STD	1	1	1
	40	53310280	FILM	1	1	1
	41	53310350	EDGING 465	1	1	1
◉	42	53307010	LEVER,R SENSOR	2	2	2
	43	54106700	SHAFT-TWIN GEAR	2	2	2
	44	36707800	MOUNT,R SENSOR	2	2	2
◉	45	54126170	PI SENSOR	2	2	2
	46	54106530	BKT-REAR SUPPORT	1	1	1
	47	54106470	BKT-SLIDER-R	1	1	1
	48	67505110	LABEL,STOPPER	0	4	4
	48	2AD05050	LABEL,STOPPER(EUR)	4	0	0
	49	53310400	EARTH PLATE 1	1	1	1
	50	53310410	EARTH PLATE 2	1	1	1

• Parts with "•" are component parts or sub-assemblies of the assembly appearing immediately above them.
• Parts with "◉" indicates the Service parts.

• Parts with "• •" are component parts or sub-assembly with "•" appearing immediately above them.

FIG. 40 CASSETTE (PAPER FEED DECK) (KM-5230)

2A4

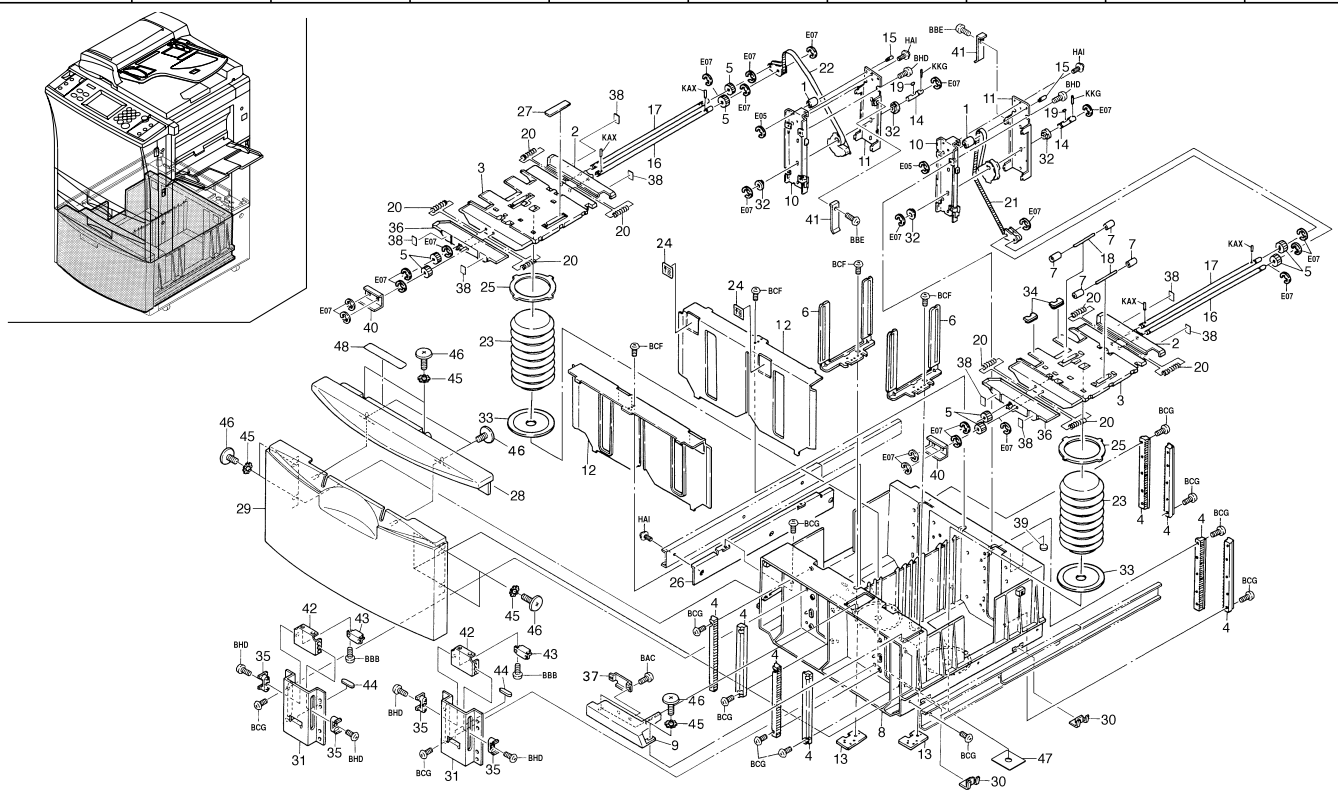

FIG. 40 CASSETTE (PAPER FEED DECK) (KM-5230)

2A4

SP	Ref. No.	Part. No.	Description	Quantity		
				230V	240V	120V
	1	54106020	LIFT PULLEY	2	2	2
	2	54106031	SIDE LIFTER R	2	2	2
	3	54106040	MAIN LIFTER	2	2	2
	4	54106050	GUIDE RACK LIFTER	8	8	8
	5	51608690	GER-1.0-24	8	8	8
	6	53310320	PAPR REAR GUIDE ASS'Y	2	2	2
	7	54106220	GUIDE PULLEY	4	4	4
	8	54106271	CASSETTE	1	1	1
	9	54104080	ADJUSTING PLATE,CASSETTE	1	1	1
	10	54106290	LIFTER DRIVE BKT1	2	2	2
	11	54106300	LIFTER DRIVE BKT2	2	2	2
	12	54106310	GUIDE,PAPER SIDE	2	2	2
	13	54106570	REAR GUIDE BASE PLATE	2	2	2
	14	54106580	CAM SHAFT	2	2	2
	15	54106590	SHAFT,DRIVE FULCLUM	2	2	2
	16	54106600	SHAFT-SUB LIFT	2	2	2
	17	54106610	SHAFT-MAIN LIFT	2	2	2
	18	54106730	SHAFT-PICK PULLEY	2	2	2
	19	54106740	PARALLEL KEY 3X3X10	2	2	2
	20	54106840	SP-SIZE	8	8	8
◉	21	54106930	RIGHT LIFT BELT ASS'Y	1	1	1
◉	22	54106940	LEFT LIFT BELT ASS'Y	1	1	1
	23	54106950	AIR DAMPER	2	2	2
	24	54106960	UPPER LIMIT LABEL	2	2	2
	25	54107130	DAMPER SUPPORT	2	2	2
	26	36707810	LEFT MOUNT,DECK	1	1	1
◉	27	54106010	RUBBER	1	1	1
◉	28	53304020	UPPER FRONT COVER STD	1	1	1
◉	29	53304010	LOWER FRONT COVER STD	1	1	1
	30	53310100	GROUND PLATE,CASSETTE	2	2	2
	31	53307060	MOUNT,SLIDE GUIDE	2	2	2
	32	5AA08420	BUSH-8P	4	4	4
	33	54107330	DAMPER MAT	2	2	2
	34	54107380	BRIDGE FILM	2	2	2
	35	53307020	SLIDER MG	4	4	4
	36	53310180	FRONT SIDE LIFTER	2	2	2
	37	54107430	PLT MG CATCH	1	1	1
	38	53310220	SIDE LIFTER SHEET	8	8	8
	39	53310140	FOOT	1	1	1
	40	53307040	MOUNT,MG STOPPER	2	2	2
	41	53307080	CAM STOPPER	2	2	2
	42	53307050	MOUNT,MG SLIDER	2	2	2
	43	53310020	SLIDER MG	2	2	2
◉	44	53310030	RUBBER,SIDE STOPPER	2	2	2
	45	36707830	WASHER,DECK COVER	8	8	8
	46	36707820	RETAINING PIN,DECK COVER	10	10	10
	47	53310490	FILM,CASSETTE	2	2	2
	48	2AD05070	LABEL,PAPER SET ST	1	1	1

• Parts with "•" are component parts or sub-assemblies of the assembly appearing immediately above them.
• Parts with "◉" indicates the Service parts.

• Parts with "• •" are component parts or sub-assembly with "•" appearing immediately above them.

FIG. 41 PAPER FEED-IN SECTION (PAPER FEED DECK)I (KM-5230) 2A4

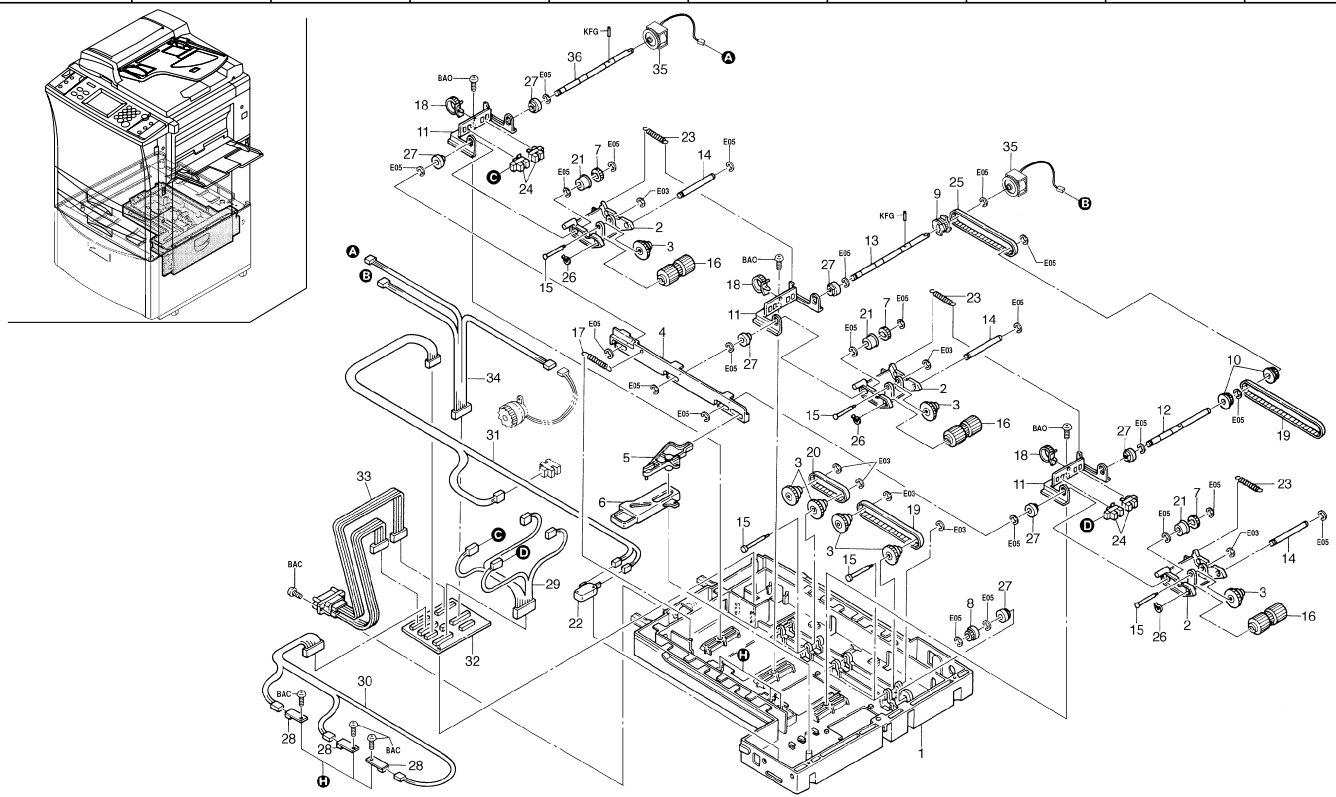

FIG. 41 PAPER FEED-IN SECTION (PAPER FEED DECK)I (KM-5230)

SP	Ref. No.	Part. No.	Description	Quantity		
				230V	240V	120V
	1	54106080	CONVEYING BASE	1	1	1
	2	54106090	PICK ARM	3	3	3
	3	54106100	PULLEY-20 GEAR 0.8-32	7	7	7
	4	54106120	PICK ARM LINK	1	1	1
	5	54106130	LINK ARM	1	1	1
	6	54106140	LINK PUSHER	1	1	1
	7	54106200	GEAR-0.8-20	3	3	3
	8	54106230	GEAR-0.8-16	1	1	1
	9	53310200	PULLEY S3M-18-WF	1	1	1
	10	54106280	PULLEY-S3M-18-OW	2	2	2
	11	54106340	BKT-SENSOR	3	3	3
	12	54106670	SHAFT-PICK UP ARM B	1	1	1
	13	54106680	SHAFT-PICK UP ARM A	1	1	1
	14	54106690	SHAFT-PICK ROLLER	3	3	3
	15	36707790	SHAFT R,SENSOR LEVER	7	7	7
◉	16	53310300	PICK-UP ROLLER	3	3	3
	17	54106760	SP-PICK ARM LINK	1	1	1
	18	M2107200	BAND,SG-110 V0(KITAGAWA)	3	3	3
◉	19	53310440	BELTS3M078050	2	2	2
◉	20	53310450	BELTS3M048050	1	1	1
	21	54106870	ONE-WAY DRUM	3	3	3
◉	22	54126180	SAFETY SWITCH	1	1	1
	23	54106890	SP-PICK B	3	3	3
◉	24	54126170	PI SENSOR	4	4	4
◉	25	54107170	BLT-B60-S3M-258	1	1	1
	26	59606770	CLIP-5	3	3	3
	27	5AA08360	BUSH-6P	7	7	7
◉	28	54126000	SENSOR51	3	3	3
	29	54126030	LS HARNESS ASS'Y	1	1	1
	30	54126040	PPS1 HARNESS ASS'Y	1	1	1
	31	54126060	DOOR HARNESS ASS'Y	1	1	1
◉	32	54128030	JUNCTION PCB ASS'Y	1	1	1
	33	54126070	JUNCTION HARNESS ASS'Y	1	1	1
	34	53310060	CL3 HARNESS ASS'Y	1	1	1
◉	35	54126110	CLUTCH-BJ-2.6-NO.2	2	2	2
	36	53310430	SHAFT-PICK UP ARM C	1	1	1

• Parts with "•" are component parts or sub-assemblies of the assembly appearing immediately above them.
• Parts with "◉" indicates the Service parts.

• Parts with "• •" are component parts or sub-assembly with "•" appearing immediately above them.

FIG. 42 PAPER FEED-IN SECTION (PAPER FEED DECK)II (KM-5230) 2A4

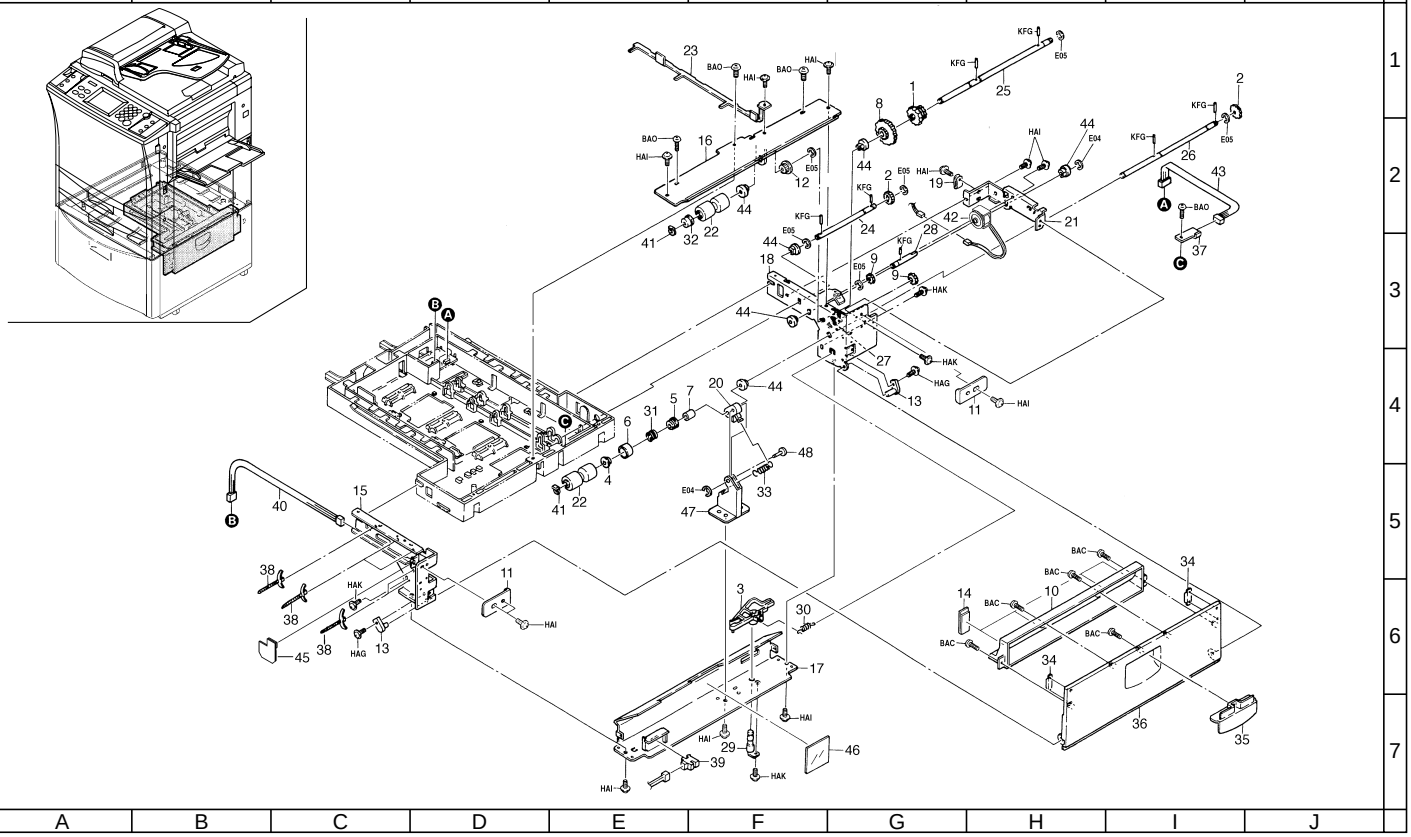

FIG. 42 PAPER FEED-IN SECTION (PAPER FEED DECK)II (KM-5230)

2A4

SP	Ref. No.	Part. No.	Description	Quantity		
				230V	240V	120V
	1	54106070	GEAR 0.8-35-1-20	1	1	1
	2	54106110	GEAR 0.8-26	2	2	2
	3	54106130	LINK ARM	1	1	1
	4	54106150	TORQUE LIMITER DRUM	1	1	1
	5	54106160	TORQUE LIMITER ARBOR	1	1	1
	6	54106170	TORQUE LIMITER COVER	1	1	1
	7	53310380	SPACER	1	1	1
	8	54106190	GEAR-0.8-50-20	1	1	1
	9	54106200	GEAR-0.8-20	2	2	2
	10	54104070	GUIDE,PAPER FEED	1	1	1
	11	53307070	ACTUATOR PLATE,MAGNET	2	2	2
	12	53310160	PULLEY S3M-16	1	1	1
	13	54106260	STUD PLATE	2	2	2
	14	54107400	JAM-COVER FILM	4	4	4
	15	54106410	FRONT CONVEYING FRAME	1	1	1
	16	54106420	PAPER GUIDE-U	1	1	1
	17	54106430	PAPER GUIDE-D	1	1	1
	18	54106440	REAR CONVEYING FRAME	1	1	1
	19	M2105040	NYLON CLAMP 6N,NK-6N	1	1	1
	20	54107360	B-ADJUSTER SP	1	1	1
	21	53310070	BRAKET,GEARBOX	1	1	1
◉	22	53310460	SEPARATION ROLLER 25E	2	2	2
	23	54106550	SPRING PLATE CONVEYING BASE GROUND	1	1	1
	24	54106620	SHAFT-GEAR-26-16	1	1	1
	25	54106630	SHAFT-NORMAL ROTATION	1	1	1
	26	54106640	SHAFT-TURN OVER	1	1	1
	27	53310230	STUD-PAPER FEED DRIVE	1	1	1
	28	54106660	SHAFT-SEPARATION DRIVE	1	1	1
	29	54106720	STUD-LINK ARM	1	1	1
	30	54106780	SP-ADJUSTMENT LINK	1	1	1
	31	54106790	SP-TORQUE LIMITER	1	1	1
	32	54106870	ONE-WAY DRUM	1	1	1
	33	53310470	SP-SEPARATION 68	1	1	1
	34	54106910	MAGNET DOOR	2	2	2
◉	35	54104060	HANDLE,CONVEYING RELEASE	1	1	1
◉	36	54104050	COVER,CONVEYING RELEASE	1	1	1
◉	37	54126000	SENSOR51	1	1	1
	38	M2107200	BAND,SG-110 V0(KITAGAWA)	5	5	5
◉	39	54126170	PI SENSOR	1	1	1
	40	54126150	RSW HARNESS ASS'Y	1	1	1
◉	41	59606770	CLIP-5	2	2	2
◉	42	54126100	CLUTCH-BJ-2.6-NO.1	1	1	1
	43	54126050	PPS0 HARNESS ASS'Y	1	1	1
	44	5AA08360	BUSH-6P	6	6	6
	45	53310480	PRESSING FILM	1	1	1
	46	54107350	FILM	1	1	1
	47	54107340	BKT-B FULCRUM	1	1	1
	48	54107370	SFT-B FULCRUM	1	1	1

• Parts with "•" are component parts or sub-assemblies of the assembly appearing immediately above them.
• Parts with "◉" indicates the Service parts.

• Parts with "• •" are component parts or sub-assembly with "•" appearing immediately above them.

FIG. 43 ACCESSORIES & SERVICE PARTS (KM-5230)

2A4

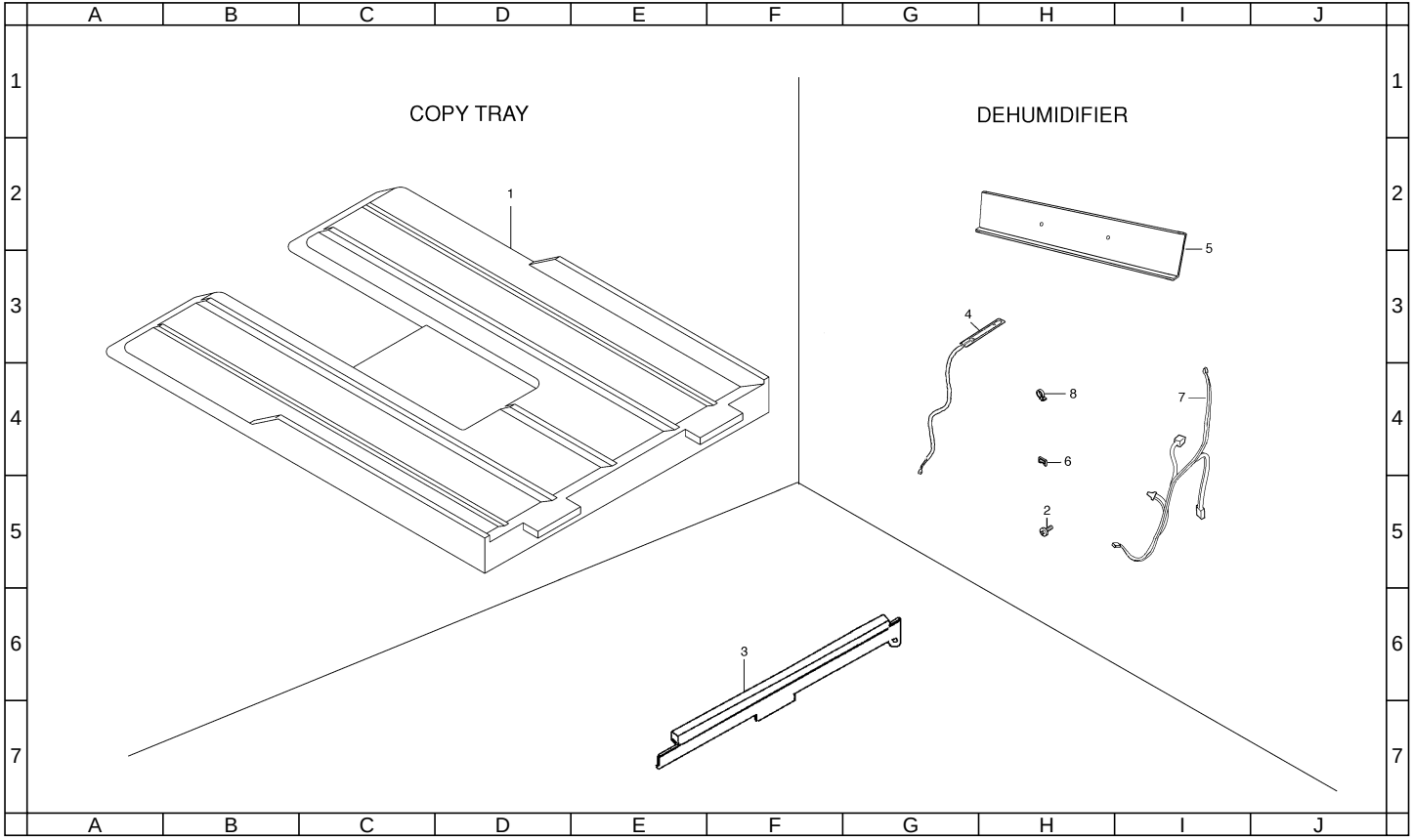

FIG. 43 ACCESSORIES & SERVICE PARTS (KM-5230)

SP	Ref. No.	Part. No.	Description	Quantity		
				230V	240V	120V
◉	1	2A304190	COPY TRAY,(EXP.)	1	1	1
	2	B1304060	BINDING SCREW BVM4X6 (BLACK)	10	10	10
◉	3	2AC00650	UPPER FEED CLEANER ASS'Y	1	1	1
◉	4	33960020	HEATER,CASSETTE (240)	2	2	0
◉	4	34860030	HEATER,CASSETTE(120)	0	0	2
	5	54107410	BASE HEATER	2	2	2
	6	M2104210	EDGING,EDS-2	8	8	8
	7	53310390	HEATER HARNESS	1	1	1
	8	M2107200	BAND,SG-110 V0(KITAGAWA)	6	6	6

• Parts with "•" are component parts or sub-assemblies of the assembly appearing immediately above them.
• Parts with "◉" indicates the Service parts.

• Parts with "• •" are component parts or sub-assembly with "•" appearing immediately above them.

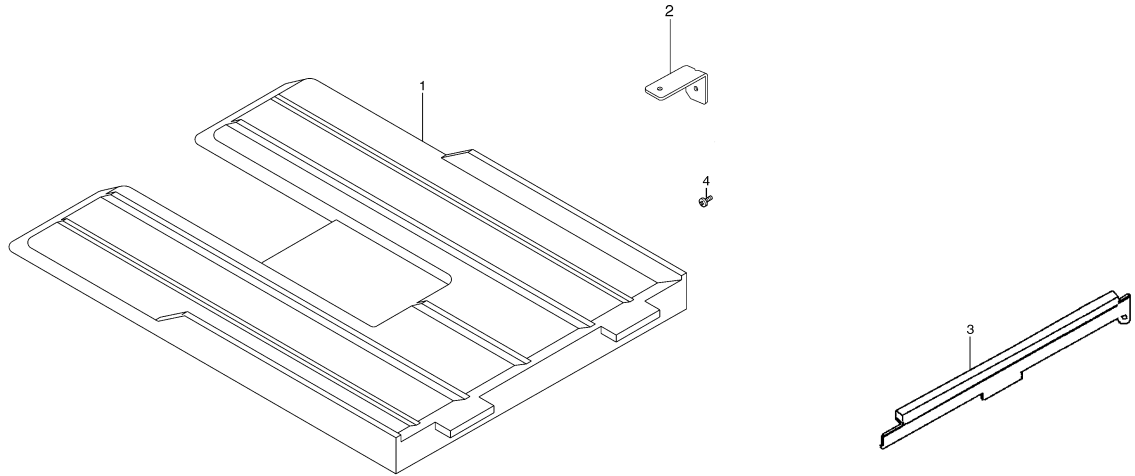
1
2
3
4

FIG. 43 ACCESSORIES & SERVICE PARTS (KM-4230)

SP	Ref. No.	Part. No.	Description	Quantity		
				230V	240V	120V
◉	1	2A304190	COPY TRAY,(EXP.)	1	1	1
	2	18502151	RETAINER,DESK	1	1	1
◉	3	2AC00650	UPPER FEED CLEANER ASS'Y	1	1	1
	4	B1304060	BINDING SCREW BVM4X6 (BLACK)	1	1	1

• Parts with "•" are component parts or sub-assemblies of the assembly appearing immediately above them.
• Parts with "◉" indicates the Service parts.

• Parts with "• •" are component parts or sub-assembly with "•" appearing immediately above them.

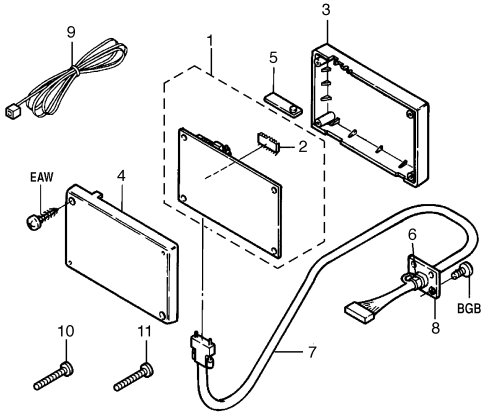
9
1
3
5
2
EAW
4
6
BGB
8
10
11
7

FIG. 44 OPTION I (MMD)

SP	Ref. No.	Part. No.	Description	Quantity		
				230V	240V	120V
	1	6550101C	MAIN PCB ASS'Y	1	1	1
	2	•65527029	IC, ROM MAIN PCB	1	1	1
	3	65504011	UPPER COVER	1	1	1
	3	65504011	UPPER COVER	1	1	1
	4	65504022	LOWER COVER	1	1	1
	5	65504030	CAP,SWITCH	1	1	1
	6	M1203490	STRAIN RELEAF BUSHING,SR-7K-2	1	1	1
	7	65527010	SIGNAL WIRING	1	1	1
	8	78826100	MOUNT SIGNAL CABLE	1	1	1
	9	76727300	MODULAR CORD B	1	1	1
	10	B3003200	TAPPING SCREW M3X20(B-TYP)	1	1	1
	11	B3323160	BINDING TAP TIGHT SCREW M3X16(BRONS)	1	1	1

• Parts with "•" are component parts or sub-assemblies of the assembly appearing immediately above them.
• Parts with "◉" indicates the Service parts.

• Parts with "• •" are component parts or sub-assembly with "•" appearing immediately above them.

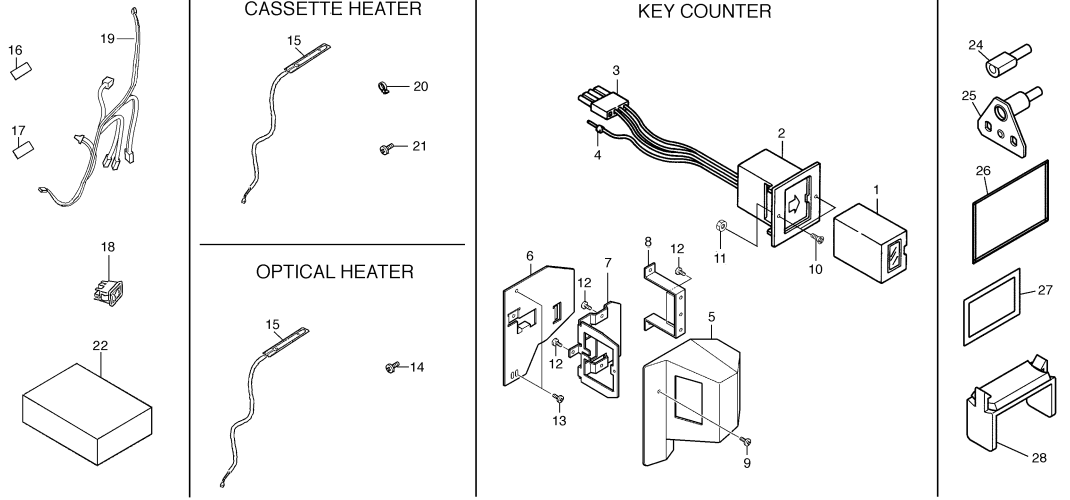
CASSETTE HEATER
OPTICAL HEATER
KEY COUNTER
16
17
18
19
22
15
20
21
14
3
4
2
1
10
11
6
7
8
12
5
9
13
24
25
26
27
28

FIG. 45 OPTION II & TOOL

SP	Ref. No.	Part. No.	Description	Quantity		
				230V	240V	120V
		66069781	SET PARTS ,KEY COUNTER	1	1	1
	1	•82142540	KEY COUNTER	1	1	1
	2	•41529121	SOCKET ASS'Y KEY COUNTER	1	1	1
	3	••41525016	SOCKET,KEY COUNTER	2	2	2
	4	••J0220040	PLUG EL 4P,ELP-04V	1	1	1
	5	•66060010	COVER,KEY COUNTER	1	1	1
	6	•66060021	RETAINER,KEY COUNTER COVER	1	1	1
	7	•66060030	RETAINER,KEY COUNTER	1	1	1
	8	•66060040	MOUNT,KEY COUNTER	1	1	1
	9	•C2303000	NUT BNM3 (BLACK)	1	1	1
	10	•B2303060	COUNTER-SUNK HEAD SCREW BFHM3X6 (BLACK)	2	2	2
	11	•B4104060	TRIPLE SCREW M4X6(CHROMIUM)	1	1	1
	12	•B4304060	TRIPLE SCREW M4X6 (BLACK)	4	4	4
	13	•B4304100	TRIPLE SCREW M4X10 (BLACK)	2	2	2
	14	68427020	POWER SOURCE SWITCH	1	1	1
◉	15	33960020	HEATER,CASSETTE (240)	2	2	0
	15	34860030	HEATER,CASSETTE(120)	0	0	2
	16	34860010	LABEL,ON	1	1	1
	17	34860020	LABEL,OFF	1	1	1
	18	67805200	LABEL,ROLL HEATER	1	1	0
	19	2AC60020	JUNCTION WIRING,DEHUMIDIFIER HEATER(EXP)	1	1	1
	20	M2107120	BINDING BAND SG-130	1	1	1
	21	B3324080	BINDING TAP TIGHT SCREW M4X8(BLACK)	2	2	2
	22	B1304060	BINDING SCREW BVM4X6 (BLACK)	2	2	2
	23	2AC82020	SET,MEMORY COPY KIT(EXP)	1	1	1
◉	24	18568120	PIN B,POSITIONING	2	2	2
◉	25	2AC68230	SPECIAL TOOL,FRAME RETAINING	2	2	2
◉	26	2AC68241	SHEET,SCANNER ADJUSTMENT	1	1	1
◉	27	2AC68300	SHEET,REINFORCEMENT	2	2	2
◉	28	35968110	STOPPER WIRE ASS'Y SP	2	2	2

• Parts with "•" are component parts or sub-assemblies of the assembly appearing immediately above them.
• Parts with "◉" indicates the Service parts.

• Parts with "• •" are component parts or sub-assembly with "•" appearing immediately above them.

SP	Part. No.	Description	Quantity 230V	240V	120V	Fig. No.
◉	18305020	LABEL,ORIGINAL INDICATION (USA)	0	0	1	31
◉	18305030	LABEL,ORIGINAL INDICATION (EUR)	1	1	0	31
◉	18307370	PULLEY 25/18P2M,PAPER FEED	1	1	1	36
◉	18307380	PULLEY 28P2M,JOINT	3	3	3	26
◉	18307550	PULLEY 18P2M,LEADING FEED	2	2	2	36
◉	18312100	PULLEY 28,EJECT DRIVE	1	1	1	34
	18327100	SWITCH,SIZE DETECTION	1	1	1	33
◉	18327130	SOLENOID,STOPPER	2	2	2	22,25
	18501150	POWER CORD ASS'Y (120)	0	0	1	28
	18502151	RETAINER,DESK	1	1	1	43
	18502160	HANDLE,MACHINE	4	4	4	2
◉	18505180	ORIGINAL SIZE INDICATOR,BYPASS (IN	0	0	1	7
◉	18506080	RACK,CASSETTE	2	2	2	7
◉	18506100	UPPER ROLLER A,FEED	1	1	1	5
◉	18506220	PAD,BYPASS RACK	1	1	1	7
◉	18510020	LAMP,CLEANING	1	1	1	16
	18512340	GUIDE,SCANNER WIRE	2	2	2	10
	18518200	GROUND PLATE,CLEANING BRUSH	6	6	6	1,1
	18522330	RETAINER,FLYWHEEL	1	1	1	20
	18526240	PLATE SPRING A,GROUND REINFORCEMEN	10	10	10	2
	18526340	GROUND PLATE,LCD	2	2	0	28
◉	18527270	TONER MOTOR	1	1	1	15
	18527460	POWER CORD 220	1	0	0	28
◉	18568120	PIN B,POSITIONING	2	2	2	45
◉	2AC00101	MAIN CHARGER ASS'Y	1	1	1	12
	2AC00120	DEVELOPING ASS'Y	1	1	1	14
◉	2AC00140	RECYCLE ASS'Y	0	0	1	15
◉	2AC00220	TRANSFER CHARGER ASS'Y	1	1	1	12
◉	2AC00232	FIXING ASS'Y(120)	0	0	1	17
◉	2AC00362	FIXING ASS'Y(230)	1	1	0	17
◉	2AC00370	RECYCLE ASS'Y B	1	1	1	15
◉	2AC00430	TRANSFER CLEANING ASS'Y	1	1	1	12
◉	2AC00450	SEPARATION CLAW ASS'Y	1	1	1	16
◉	2AC00630	LOWER REGISTRATION CLEANER ASS'Y	1	1	1	8
◉	2AC00640	UPPER RESISTRATION CLEANER ASS'Y	1	1	1	8
◉	2AC00650	UPPER FEED CLEANER ASS'Y	2	2	2	43,43
	2AC02050	LOWER LEFT REINFORCEMENT	1	1	1	2
	2AC02070	REAR LEFT MOUNT,HANDLE	1	1	1	2
	2AC02080	REAR RIGHT MOUNT,HANDLE	1	1	1	2
	2AC02091	LEFT UPPER FRONT REINFORCEMENT	1	1	1	2
	2AC02101	FRONT RIGHT MOUNT,HANDLE	1	1	1	2
	2AC02110	MOUNT,RAIL DUPLEX	1	1	1	2
	2AC02130	UPPER REAR REINFORCEMENT	3	3	3	2
	2AC02160	SHIELD PLATE,POWER SOURCE	1	1	1	2
	2AC04140	MOUNT,SAFETY SWITCH	1	1	1	27
	2AC04150	INNER COVER	2	2	2	1,1
	2AC04160	RIGHT INNER COVER	1	1	1	1
	2AC04170	LEFT INNER COVER	2	2	2	1,1
	2AC04190	LID,OPERATION UNIT ROM	2	2	2	1,1
	2AC04200	LEFT RETAINER,HINGE	1	1	1	1
	2AC04210	RIGHT RETAINER,HINGE	1	1	1	1
	2AC04220	LOWER REAR MOUNT,COVER	1	1	1	2
	2AC04260	LOWER REAR RIGHT SPONGE A,COVER(EU	1	0	0	1
	2AC04270	LOWER REAR RIGHT SPONGE B,COVER(EU	1	0	0	1
	2AC04280	LOWER REAR RIGHT SPONGE C,COVER(EU	1	0	0	1
	2AC04290	RIGHT SPONGE A,MIDDLE COVER(EUR)	1	0	0	1
	2AC04300	RIGHT SPONGE B,MIDDLE COVER(EUR)	1	0	0	1
	2AC04310	RIGHT SPONGE C,MIDDLE COVER(EUR)	1	0	0	1
	2AC04320	RIGHT SPONGE D,MIDDLE COVER(EUR)	2	0	0	1
	2AC04340	VIBRATION INSULATOR,MIDDLE(EUR)	2	0	0	2
	2AC04350	VIBRATION INSULATOR,FEED(EUR)	1	0	0	5
	2AC04380	REAR SPONGE,FRAME(EUR)	1	0	0	2
	2AC04420	LOWER LEFT SPONGE,COVER(EUR)	1	0	0	1
	2AC04430	LEFT SPONGE A,MIDDLE COVER(EUR)	2	0	0	1,1
	2AC04440	SPONGE,FEED(EUR)	2	0	0	5
	2AC04450	LEFT SPONGE B,MIDDLE COVER(EUR)	1	0	0	1
	2AC04460	LEFT SPONGE C,MIDDLE COVER(EUR)	3	3	3	26
	2AC05090	LABEL,IMAGE FORMATION COVER	1	1	1	15
	2AC05100	LABEL,JAM RELEASE	2	2	2	1,1
	2AC05110	LABEL L,HIGH TEMPERATURE CAUTION(E	2	0	0	17
	2AC05120	LABEL S,HIGH TEMPERATURE CAUTION(E	1	0	0	17
	2AC05130	LABEL,SUPPLY(EUR)	2	0	0	1,1
	2AC05140	LABEL,DRUM CAUTION(EXP)	0	0	2	1,1
	2AC05150	LABEL,DRUM CAUTION(EUR)	2	2	0	1,1
◉	2AC05160	ORIGINAL SIZE INDICATOR,BYPASS(EUR	1	1	0	7
	2AC05180	LABEL,PAPER SET	2	2	2	3,3
	2AC05200	LABEL,IMAGE FORMATION CAUTION	1	1	1	15
	2AC06011	UPPER GUIDE,FEED	1	1	1	5
	2AC06020	GUIDE,FEED MIDDLE	1	1	1	5
	2AC06030	LOWER GUIDE,FEED	1	1	1	5

• Parts with "◉" indicates the Service parts.

SP	Part. No.	Description	Quantity 230V	240V	120V	Fig. No.
	2AC06041	FRAME,FEED	1	1	1	5
	2AC06050	GUIDE FILM,FEED MIDDLE	1	1	1	5
◉	2AC06060	ROLLER B,FEED	1	1	1	5
	2AC06090	FRONT FRAME,BYPASS	1	1	1	6
	2AC06100	REAR FRAME,BYPASS	1	1	1	6
	2AC06110	LOWER GUIDE,BYPASS	1	1	1	6
	2AC06120	SUPPORT PLATE,LEADING FEED PULLEY	1	1	1	6
	2AC06130	SUPPORT PLATE,SEPARATION PULLEY	1	1	1	6
	2AC06140	LEVER,PE	1	1	1	6
	2AC06150	LEVER,BYPASS SOLENOID	1	1	1	6
	2AC06160	STOPPER,PAPER	1	1	1	6
	2AC06170	FULCRUM PLATE,BYPASS TABLE	2	2	2	2
	2AC06200	RIGHT MOUNT,COVER FEED	1	1	1	7
	2AC06220	DIAL,FEED	1	1	1	5
◉	2AC06230	CLUTCH,RESISTRATION	1	1	1	20
◉	2AC06240	CLUTCH,PAPER FEED	3	3	3	18
◉	2AC06250	MOTOR,LIFT CASSETTE	2	2	2	18
◉	2AC06260	CLUTCH 32,FEED	1	1	1	18
	2AC06270	UPPER GUIDE,REGISTRATION	1	1	1	7
	2AC06280	STOPPER,BYPASS TABLE	2	2	2	6
◉	2AC06290	UPPER ROLLER,REGISTRATION	1	1	1	7
◉	2AC06300	LOWER ROLLER,REGISTRATION	1	1	1	8
◉	2AC06310	LOWER ROLLER A,FEED	1	1	1	5
◉	2AC06330	FILM,BYPASS PAPER FEED	2	2	2	6
	2AC06340	SHAFT,VERTICAL CONVEYING	4	4	4	7
◉	2AC06350	UPPER FILM,RESISTANCE GUIDE FILM	1	1	1	13
◉	2AC06380	ROLLER C,FEED	2	2	2	7
◉	2AC06390	ROLLER D,FEED	1	1	1	7
	2AC06400	SPRING,FEED	8	8	0	7
	2AC07030	SHAFT,REFEED	1	1	1	23
◉	2AC07040	UPPER ROLLER,DUPLEX REGISTRATION	1	1	1	23
◉	2AC07050	GEAR 20/30,DUPLEX REGISTRATION	1	1	1	22
	2AC07060	SHAFT,LEADING REGISTRATION	1	1	1	22
	2AC07070	SHAFT,DUPLEX CONVEYING DRIVE	1	1	1	22
	2AC07090	SHAFT,REFEED PULLEY	1	1	1	22
	2AC07100	UPPER GUIDE,DUPLEX REFEED	1	1	1	22
	2AC07110	GUIDE,TURN OVER FEED SHIFT	1	1	1	22
	2AC07120	SUPPORT PLATE,GUIDE TURN OVER FEED	1	1	1	22
	2AC07140	MOUNT,TURN OVER FEED SHIFT SOLENOI	1	1	1	22
	2AC07150	LEVER,TURN OVER FEED SHIFT SOLENOI	1	1	1	22

SP	Part. No.	Description	Quantity 230V	240V	120V	Fig. No.
	2AC07160	LEFT GUIDE,MIDDLE TRAY	1	1	1	23
	2AC07170	MOUNT,DUPLEX DRAWER	1	1	1	24
	2AC07180	UPPER GUIDE,DUPLEX FEED	1	1	1	4
	2AC07190	MOUNT,TRAILING EDGE TAPPING SOLENO	1	1	1	22
	2AC07200	SUPPORT PLATE,LEADING REGISTRATION	1	1	1	22
◉	2AC07210	LOWER ROLLER,DUPLEX CONVEYING	1	1	1	22
	2AC07220	RIGHT GUIDE,DUPLEX CONVEYING	1	1	1	24
	2AC07230	LEFT GUIDE,DUPLEX CONVEYING	1	1	1	24
	2AC07270	GUIDE,TRAILING EDGE TAPPING	1	1	1	22
	2AC07281	MOUNT,DUPLEX SWITCH	1	1	1	23
◉	2AC07301	ROLLER C,DUPLEX CONVEYING	1	1	1	22
◉	2AC07311	LOWER ROLLER B,DUPLEX CONVEYING	1	1	1	22
	2AC07320	LEFT SUPPORT PLATE,DUPLEX UNIT	1	1	1	24
	2AC07330	RIGHT SUPPORT PLATE,DUPLEX UNIT	1	1	1	24
	2AC07340	RIGHT MOUNT,RAIL	1	1	1	2
	2AC07360	HOOK,DUPLEX LOCK	1	1	1	2
	2AC07370	RADIATOR,DUPLEX MOTOR	1	1	1	23
◉	2AC07380	MOTOR,DUPLEX SIDE REGISTRATION	1	1	1	23
	2AC07390	GUIDE FILM,DUPLEX SIDE REGISTRATIO	2	2	2	23
◉	2AC07400	PULLEY 22,LEADING REGISTRATION	1	1	1	22
	2AC07410	SPRING,DUPLEX HOOK	1	1	1	2
◉	2AC07420	FILM,TRAILING EDGE TAPPING	1	1	1	22
◉	2AC07430	FILM B,TRAILING EDGE TAPPING	2	2	2	22
	2AC07441	GUIDE FILM,DUPLEX FEED IN	6	6	6	22
	2AC07450	SPRING,FEED	2	2	2	22
	2AC07460	STOPPER,TRAILING EDGE TAPPING	2	2	2	22
	2AC08080	SLIDER,IMAGE FORMATION UNIT	2	2	2	2
	2AC08091	MOUNT,SLIDER	1	1	1	2
	2AC08100	MOUNT,IMAGE FORMATION DRAWER	1	1	1	13
	2AC08110	LOWER GUIDE,IMAGE FORMATION	1	1	1	13
◉	2AC08120	LOWER FILM,IMAGE FORMATION GUIDE	1	1	1	13
	2AC08130	FRONT RETAINER,DRUM	1	1	1	13
	2AC08140	REAR RETAINER,DRUM	1	1	1	13
	2AC08150	GROUND PLATE,IMAGE FORMATION UNIT	1	1	1	13
	2AC08160	GROUND PLATE,DRUM DRIVE	1	1	1	20
	2AC08170	PIN,IMAGE FORMATION UNIT	4	4	4	2
	2AC08190	HOOK,IMAGE FORMATION UNIT	2	2	2	2
	2AC08200	MOVING PLATE,HOOK	1	1	1	2
	2AC08210	MOUNT,HOOK	1	1	1	2
	2AC08220	WORK PLATE,HOOK	1	1	1	15

• Parts with "◉" indicates the Service parts.

SP	Part. No.	Description	Quantity 230V	240V	120V	Fig. No.
	2AC08230	COVER,HOOK WORK	1	1	1	15
	2AC08240	LID,HOOK WORK	1	1	1	15
	2AC08250	RIGHT GROUND PLATE,REINFORCEMENT	1	1	1	13
	2AC08260	LEFT GROUND PLATE,REINFORCEMENT	1	1	1	13
	2AC08270	STOPPER,IMAGE FORMATION UNIT	1	1	1	2
	2AC08280	FRONT GUIDE,TRANSFER CONVEYING	2	2	2	13
	2AC08290	LEVER,IMAGE FORMATION STOPPER	1	1	1	2
◉	2AC08300	LOWER SHIELD,IMAGE FORMATION GUIDE	4	4	4	13,14
◉	2AC10010	FRONT HOUSING,MC	1	1	1	12
◉	2AC10020	REAR HOUSING,MC	1	1	1	12
◉	2AC10030	SHIELD,MC	1	1	1	12
◉	2AC10040	GRID	1	1	1	12
◉	2AC10050	TENSION PLATE,GRID	1	1	1	12
◉	2AC10060	TERMINAL,MC HOUSING	1	1	1	12
◉	2AC10070	FRONT LID,MC HOUSING	1	1	1	12
◉	2AC10080	REAR LID,MC HOUSING	1	1	1	12
◉	2AC10090	HOUSING,MC CONNECTOR	1	1	1	12
◉	2AC10180	HOLDER,MC ADJUSTMENT	1	1	1	12
◉	2AC10190	TERMINAL,MC CONNECTOR	1	1	1	12
	2AC10200	SEAL,MC	1	1	1	12
◉	2AC10210	TERMINAL,GRID CATCH	2	2	2	12,28,28
	2AC10220	UPPER SHIELD,MC	1	1	1	12
	2AC10230	RIGHT SHIELD,MC	1	1	1	12
◉	2AC12100	LAMP,SCANNER	1	1	1	10
	2AC12110	UPPER MIRROR FRAME A,SCANNER	1	1	1	10
	2AC12120	LOWER MIRROR FRAME A,SCANNER	1	1	1	10
	2AC12130	REFLECTOR,SCANNER	1	1	1	10
◉	2AC12140	MIRROR A	1	1	1	10
◉	2AC12150	MIRROR B	2	2	2	10
◉	2AC12170	WIRE,SCANNER	1	1	1	10
	2AC12180	ADJUSTING PLATE,SCANNER WIRE	2	2	2	10
	2AC12210	SHAFT,SCANNER DRIVE	1	1	1	10
◉	2AC12220	MOTOR,SCANNER	1	1	1	10
	2AC12230	MOUNT,RELEASE SWITCH	1	1	1	9
	2AC12240	COVER,INVERTER	1	1	1	10
	2AC12250	MOUNT,SCANNER MOTOR	1	1	1	10
	2AC12260	LIGHT SHIELD,PI	1	1	1	10
	2AC12270	GUIDE FFC1	1	1	1	10
	2AC12280	HOLDER,ADF CONTACT GLASS	2	2	2	9
	2AC12300	HOLDER FFC	2	2	2	10

SP	Part. No.	Description	Quantity 230V	240V	120V	Fig. No.
	2AC12360	GUIDE,RELEASE SWITCH	1	1	1	9
	2AC12370	SWITCH,RELEASE DETECTION	1	1	1	9
	2AC12380	SPRING,RELEASE SWITCH	1	1	1	9
	2AC12400	ADJUSTING PLATE B,MIRROR FRAME	1	1	1	10
	2AC12410	SPACER,RETAINING PIN	1	1	1	9
◉	2AC12420	WIRE S,SCANNER	1	1	1	10
	2AC12430	FILM,GLASS DUST SHIELD	1	1	1	9
	2AC12440	GROUND PLATE,INVERTER	1	1	1	10
◉	2AC13010	UNIT,LSU	1	1	1	11
	2AC13020	BASE,LSU	1	1	1	2
	2AC13030	PIN,LSU ADJUSTMENT	1	1	1	11
	2AC13040	MOUNT,LSU ADJUSTMENT	1	1	1	11
	2AC14010	HOUSING,DEVELOPING	1	1	1	14
	2AC14020	MAGNET,DEVELOPING	1	1	1	14
◉	2AC14050	FRONT BUSHING,SLEEVE	1	1	1	14
	2AC14061	RAIL,IMAGE FORMATION	1	1	1	13
	2AC14080	HOUSING DB,CONNECTOR	1	1	1	28,28
◉	2AC14090	TERMINAL DB,CONNECTOR	1	1	1	13
	2AC14140	DUCT,DEVELOPING	1	1	1	16
	2AC14150	SPRING,DOCTOR BLADE ADJUSTMENT	1	1	1	14
◉	2AC14160	LOWER FILM B,DEVELOPING	1	1	1	14
◉	2AC14170	FILM,DOCTOR BLADE STAY	1	1	1	14
	2AC14510	LOWER DUCT,DEVELOPING	1	1	1	13
	2AC14520	LID,DEVELOPING DUCT	1	1	1	16
◉	2AC14560	FILTER,DEVELOPING DUCT	1	1	1	16
	2AC14570	LOWER SPONGE A,DEVELOPING DUCT	2	2	2	13
	2AC14580	LOWER SPONGE B,DEVELOPING DUCT	1	1	1	13
	2AC14590	LOWER GUIDE FILM,DEVELOPING DUCT	1	1	1	13
	2AC15011	HOUSING,RECYCLE	1	1	1	15
	2AC15021	LID,RECYCLE	1	1	1	15
	2AC15030	MOUNT,RECYCLE	1	1	1	15
	2AC15040	SPIRAL,HOPPER	1	1	1	15
	2AC15050	SPIRAL,RECYCLE	1	1	1	15
	2AC15060	SHAFT,HOPPER PADDLE	1	1	1	15
	2AC15070	PADDLE,RECYCLE	1	1	1	15
	2AC15080	FILM,PADDLE	2	2	2	15
◉	2AC15100	TONER MOTOR	1	1	1	15
	2AC15110	MOUNT,TONER MOTOR	1	1	1	15
	2AC15120	MOUNT,RECYCLE DRIVE	1	1	1	15
	2AC15130	SHAFT,RECYCLE DRIVE	1	1	1	15

• Parts with "◉" indicates the Service parts.

SP	Part. No.	Description	Quantity 230V	240V	120V	Fig. No.
◉	2AC15140	GEAR,RECYCLE DRIVE	1	1	1	15
◉	2AC15150	GEAR 20,RECYCLE DRIVE	1	1	1	15
◉	2AC15170	GEAR 40,RECYCLE	1	1	1	15
◉	2AC15180	GEAR 14/22,RECYCLE	1	1	1	15
	2AC15190	GEAR 25,RECYCLE	1	1	1	15
	2AC15200	COVER,RECYCLE	1	1	1	15
	2AC15210	LEVER,CARTRIDGE DETACHING	1	1	1	15
	2AC15220	HANDLE,CARTRIDGE DETACHING	1	1	1	15
	2AC15230	SPONGE A,RECYCLE	2	2	2	15
	2AC15270	GROUND PLATE,TONER MOTOR	1	1	1	2
◉	2AC15280	COUPLING A,RECYCLE SPIRAL	1	1	0	15
	2AC15290	COUPLING B,RECYCLE SPIRAL	1	1	0	15
◉	2AC15300	SPRING,RECYCLE SPIRAL	1	1	1	15
	2AC15310	SPONGE,RECYCLE HOPPER	1	1	1	15
	2AC15320	FILM,TONER PARTITION	1	1	1	15
	2AC15330	SPONGE,SUB HOPPER	1	1	1	15
	2AC15340	SPONGE C,RECYCLE	2	2	2	15
	2AC15530	SPIRAL,SUB HOPPER	1	1	1	15
	2AC15540	HOUSING,SUB HOPPER	1	1	1	15
	2AC16011	GUIDE,CONVEYING	1	1	1	8
◉	2AC16020	ROLLER,CONVEYING	1	1	1	8
◉	2AC16030	BELT,CONVEYING	3	3	3	8
	2AC16040	DUCT,CONVEYING	1	1	1	8
	2AC16050	FRONT FRAME,CONVEYING	1	1	1	8
	2AC16060	REAR FRAME,CONVEYING	1	1	1	8
	2AC16070	STAY,CONVEYING	1	1	1	8
	2AC16080	FRONT GUIDE,CONVEYING	1	1	1	8
	2AC16090	RAIL,TRANSFER CHARGER	1	1	1	8
	2AC16100	LOWER GUIDE,RESISTRATION	1	1	1	8
	2AC16110	ARM,RESISTRATION RELEASE	2	2	2	8
	2AC16120	SHAFT,TRANSFER RELEASE	1	1	1	8
	2AC16130	PLATE SPRING,CONVEYING RELEASE	2	2	2	8
	2AC16140	FULCRUM PIN,CONVEYING RELEASE	1	1	1	8
	2AC16150	DUCT B,CONVEYING	1	1	1	19
	2AC16160	DUCT C,CONVEYING	1	1	1	19
◉	2AC16170	FILTER A,OZONE	1	1	1	19
◉	2AC16180	FAN,CONVEYING	1	1	1	8
◉	2AC16190	UNIT,CLEANING MOTOR	1	1	1	12
	2AC16200	SHAFT,CONVEYING	1	1	1	8
◉	2AC16211	FRONT FILM,RESISTRATION	1	1	1	8

SP	Part. No.	Description	Quantity 230V	240V	120V	Fig. No.
	2AC16220	LOWER SUPPORT PLATE,RESISTRATION C	1	1	1	8
	2AC16240	STOPPER,CONVEYING	2	2	2	8
	2AC16250	SPONGE,CONVEYING	1	1	1	8
◉	2AC17010	SHIELD,TRANSFER	1	1	1	12
	2AC17020	LOWER FRONT GUIDE,TRANSFER	1	1	1	8
◉	2AC17040	REAR HOUSING,TRANSFER	1	1	1	12
◉	2AC17050	HOUSING,TRANSFER CONNECTOR	1	1	1	28,28
	2AC17060	TERMINAL,TRANSFER CHARGER	2	2	2	12
◉	2AC17080	LID,TRANSFER CONNECTOR	1	1	1	28,28
◉	2AC17090	GUIDE,SEPARATION	1	1	1	12
◉	2AC17100	FRONT HOUSING,TRANSFER	1	1	1	12
◉	2AC17110	PAD A,SHIELD CLEANING	1	1	1	12
◉	2AC17120	PAD B,SHIELD CLEANING	1	1	1	12
	2AC17131	LOWER FRONT FILM,TRANSFER	1	1	1	8
◉	2AC17140	HOLDER,TRANSFER CLEANING	1	1	1	12
◉	2AC17150	PARTITION,TRANSFER SHIELD	1	1	1	12
	2AC17160	FILM,TRANSFER SHIELD	1	1	1	12
	2AC18010	HOUSING,CLEANING	1	1	1	16
	2AC18021	STAY,CLEANING	1	1	1	16
	2AC18030	SPIRAL,CLEANING	1	1	1	16
	2AC18050	MOUNT,SEPARATION CLAW	1	1	1	16
	2AC18060	UPPER COVER,CLEANING	1	1	1	16
◉	2AC18070	SCRAPER,BRUSH	1	1	1	16
	2AC18080	GROUND PLATE,CLEANING	1	1	1	16
◉	2AC18100	GEAR 15,FUR BRUSH	1	1	1	16
	2AC18120	GEAR 34,THRUST CAM	1	1	1	16
◉	2AC18140	FRONT SEAL,BLADE SIDE	1	1	1	16
◉	2AC18150	REAR SEAL,BLADE SIDE	1	1	1	16
◉	2AC18170	UPPER SPONGE,BLADE SIDE	2	2	2	16
◉	2AC18182	SPONGE,GUIDE BRUSH	2	2	2	16
◉	2AC18210	SPONGE,CLEANING STAY	1	1	1	16
◉	2AC18220	SPONGE,SCRAPER	2	2	2	16
◉	2AC18230	FRONT SPONGE,CLEANING STAY	1	1	1	16
◉	2AC18240	REAR SPONGE,CLEANING HOUSING	1	1	1	16
	2AC18260	SHAFT,CLEANING BLADE	1	1	1	16
	2AC18270	PRESSING PLATE,CLEANING BLADE	1	1	1	16
◉	2AC18280	GEAR 20,SPIRAL	1	1	1	16
◉	2AC18290	GEAR 24/20,SPIRAL	1	1	1	16
◉	2AC18300	SPRING,CLEANING	1	1	1	16
◉	2AC18310	FRONT SPONGE,BLADE SIDE	1	1	1	16

• Parts with "◉" indicates the Service parts.

SP	Part. No.	Description	Quantity			Fig. No.
			230V	240V	120V	
◉	2AC18320	REAR SPONGE,BLADE SIDE	1	1	1	16
	2AC18330	LOWER MOUNT,SEPARATION CLAW	1	1	1	16
◉	2AC18350	FRONT GUIDE FILM,DRUM	1	1	1	13
◉	2AC18360	REAR GUIDE FILM,DRUM	1	1	1	13
◉	2AC18380	SCRAPER,SPIRAL	1	1	1	16
◉	2AC18390	FRONT FILM,IMAGE FORMATION	1	1	1	16
	2AC18400	REAR FILM,IMAGE FORMATION	1	1	1	16
	2AC20010	LEFT COVER,FIXING	1	1	1	17
	2AC20020	FRONT FRAME,FIXING GUIDE	1	1	1	17
	2AC20030	REAR FRAME,FIXING GUIDE	1	1	1	17
	2AC20040	FRONT COVER,FIXING	1	1	1	17
	2AC20050	BASE,FIXING	1	1	1	17
	2AC20060	LEFT RETAINER,FIXING COVER	2	2	2	17
	2AC20081	LOWER LEFT GUIDE,FIXING	1	1	1	17
	2AC20090	PROTECTING PLATE,FIXING SEPARATION	6	6	6	17
	2AC20100	FULCRUM PIN,FIXING UNIT RELEASE	1	1	1	2
	2AC20110	LEVER,FIXING UNIT RELEASE	1	1	1	2
	2AC20120	HANDLE,FIXING UNIT RELEASE	1	1	1	2
	2AC20130	MOUNT,FIXING UNIT RELEASE	1	1	1	2
	2AC20140	STOPPER,FIXING UNIT RELEASE	1	1	1	17
	2AC20150	LOWER REINFORCEMENT,FIXING	1	1	1	2
	2AC20160	HANDLE,FIXING	1	1	1	17
	2AC20170	MOUNT,FIXING DRAWER	1	1	1	2
	2AC20180	RAIL,FIXING UNIT	1	1	1	2
	2AC20190	STOPPER,FIXING UNIT	1	1	1	2
◉	2AC20200	FILM,FIXING THERMISTOR	1	1	1	17
	2AC20210	UPPER GUIDE FILM,FIXING	2	2	2	17
◉	2AC20231	FRONT LEFT SHEET,FIXING	1	1	1	17
	2AC20240	LEFT FULCRUM PIN,FIXING GUIDE	1	1	1	17
◉	2AC20251	REAR LEFT SHEET,FIXING	1	1	1	17
◉	2AC20320	HEATER MU,FIXING (120)	0	0	1	17
◉	2AC20330	HEATER MU,FIXING(220 - 240)	1	1	0	17
◉	2AC20350	HEATER SU,FIXING(120)	0	0	1	17
◉	2AC20360	HEATER SU,FIXING(220 - 240)	1	1	0	17
◉	2AC20370	ROLLER,HEAT	1	1	1	17
◉	2AC20380	PRESS ROLLER	1	1	1	17
	2AC20390	CLAW,SEPARATION	7	7	7	17
	2AC21010	FRONT FRAME,EJECT	1	1	1	26
	2AC21020	REAR FRAME,EJECT	1	1	1	26
◉	2AC21030	LEFT ROLLER,TURN OVER FEED	1	1	1	26
◉	2AC21040	ROLLER,TURN OVER EJECT	1	1	1	26
	2AC21050	LEFT GUIDE,TURN OVER EJECT	1	1	1	26
	2AC21061	UPPER RIGHT GUIDE,TURN OVER EJECT	1	1	1	26
	2AC21071	INNER RIGHT GUIDE,TURN OVER EJECT	1	1	1	26
	2AC21080	UPPER RIGHT FILM,GUIDE FILM TURN O	1	1	1	26
	2AC21100	RIGHT SUPPORT PLATE,GUIDE TURN OVE	1	1	1	26
	2AC21120	HOLDER,EJECT FULCRUM	2	2	2	26
	2AC21131	UPPER GUIDE,EJECT	1	1	1	26
◉	2AC21180	BELT,EJECT DRIVE	1	1	1	26
	2AC21190	SHAFT,EJECT	1	1	1	26
	2AC21200	GUIDE,EJECT	1	1	1	26
◉	2AC21210	FRONT UPPER SHEET,FEED SHIFT	1	1	1	25
◉	2AC21220	REAR UPPER SHEET,FEED SHIFT	1	1	1	25
◉	2AC21230	FRONT LOWER SHEET,FEED SHIFT	1	1	1	25
◉	2AC21240	REAR LOWER SHEET,FEED SHIFT	1	1	1	25
◉	2AC21250	STATIC ELIMINATOR,EJECT	1	1	1	26
	2AC21510	FRONT FRAME,FEED SHIFT	1	1	1	25
	2AC21520	REAR FRAME,FEED SHIFT	1	1	1	25
	2AC21540	LOWER RIGHT GUIDE,FEED SHIFT	1	1	1	25
	2AC21550	LOWER GUIDE,FEED SHIFT	1	1	1	25
◉	2AC21560	RIGHT ROLLER,TURN OVER FEED	1	1	1	25
	2AC21570	LOWER RIGHT GUIDE,TURN OVER EJECT	1	1	1	25
	2AC21580	TENSION PLATE,FEED SHIFT DRIVE	1	1	1	25
	2AC21590	MOUNT,FEED SHIFT SOLENOID	1	1	1	25
	2AC21610	LOWER LEFT GUIDE,FEED SHIFT	1	1	1	25
	2AC21630	LEVER A,FEED SHIFT SOLENOID	1	1	1	25
◉	2AC21650	PULLEY 22,FEED SHIFT	1	1	1	25
◉	2AC21660	BELT,FEED SHIFT	1	1	1	25
◉	2AC21680	RIGHT ROLLER,FEED SHIFT	1	1	1	25
◉	2AC21690	LOWER ROLLER,FEED SHIFT	1	1	1	25
	2AC21760	UPPER RIGHT GUIDE,FEED SHIFT	1	1	1	25
◉	2AC21770	LEFT ROLLER,FEED SHIFT	1	1	1	25
	2AC22010	MOUNT,IMAGE FORMATION DRIVE	1	1	1	20
	2AC22020	RETAINER,IMAGE FORMATION DRIVE	1	1	1	20
◉	2AC22030	PULLEY 54,DRUM	1	1	1	20
	2AC22040	SHAFT,DRUM DRIVE	1	1	1	20
	2AC22050	SHAFT,DEVELOPING DRIVE	1	1	1	20
	2AC22060	MOUNT BASE,DEVELOPING DRIVE	1	1	1	20
	2AC22070	SHAFT,REGISTRATION DRIVE	1	1	1	20
◉	2AC22090	PULLEY 26/80,DRUM DRIVE	1	1	1	20

• Parts with "◉" indicates the Service parts.

SP	Part. No.	Description	Quantity 230V	240V	120V	Fig. No.
	2AC22100	RETAINER,PAPER FEED DRIVE	1	1	1	18
	2AC22110	RETAINER,FIXING DRIVE	1	1	1	19
	2AC22120	HOLDER,DUPLEX DRIVE	1	1	1	19
	2AC22140	SHAFT,FEED DRIVE	1	1	1	18
◉	2AC22170	CLUTCH 35,FEED	1	1	1	18
	2AC22180	MOUNT,FEED SHIFT DRIVE	1	1	1	18
	2AC22190	RETAINER,FEED SHIFT DRIVE	1	1	1	18
	2AC22240	MOUNT,EJECT SHIFT DRIVE	1	1	1	19
	2AC22250	RETAINER,EJECT SHIFT DRIVE	1	1	1	19
	2AC22260	SHAFT,EJECT DRIVE	1	1	1	19
◉	2AC22270	GEAR 20/28,EJECT	1	1	1	19
	2AC22280	TENSION PLATE B,PAPER FEED DRIVE	1	1	1	18
◉	2AC22290	BELT,PAPER FEED DRIVE	1	1	1	18
◉	2AC22300	BELT,FIXING DRIVE	1	1	1	19
	2AC22360	COLLAR,DRUM SHAFT	1	1	1	20
◉	2AC22370	GEAR 29	1	1	1	19
◉	2AC22380	GEAR 63/32,FIXING	1	1	1	19
◉	2AC22390	GEAR 43,DUPLEX	1	1	1	19
◉	2AC22400	PULLEY 36/32,FIXING	1	1	1	19
◉	2AC22410	GEAR 24,IMAGE FORMATION	1	1	1	20
	2AC22420	MOUNT,FIXING DRIVE	1	1	1	19
	2AC22430	SHAFT,FEED CLUTCH	2	2	2	18
◉	2AC22440	GEAR 55/45,FEED	1	1	1	18
◉	2AC22450	GEAR 47,FEED	1	1	1	18
◉	2AC22460	GEAR 40,FEED	1	1	1	18
◉	2AC22470	GEAR 38/23,PAPER FEED DRIVE	1	1	1	18
◉	2AC22480	BELT,CLEANING DRIVE	1	1	1	20
◉	2AC22490	GEAR 63/35,DRUM	1	1	1	20
◉	2AC22500	MOTOR,MAIN	2	2	2	19,20
◉	2AC22510	CLUTCH,EJECT SHIFT	1	1	1	19
◉	2AC22520	MOTOR,PAPER FEED	1	1	1	18
◉	2AC22600	GEAR 39/25,BYPASS	1	1	1	20
◉	2AC22610	GEAR 35/29,DEVELOPING	1	1	1	20
◉	2AC22620	PULLEY 40/28,CLEANING DRIVE	1	1	1	20
◉	2AC22630	GEAR 31,RESISTRATION	1	1	1	20
◉	2AC22640	GEAR 38,CLEANING	1	1	1	20
	2AC23010	UPPER PARTITION,FIXING	1	1	1	2
	2AC23020	RIGHT PARTITION,FIXING	1	1	1	2
	2AC23040	MOUNT,OZONE FILTER	1	1	1	2
◉	2AC23050	FILTER,COOLING	1	1	1	2
◉	2AC23060	FAN,COOLING	2	2	2	28,28
	2AC26010	LID,MAIN PCB	1	1	1	28,28
	2AC26020	LID,SEQUENCE	1	1	1	28,28
	2AC26050	MOUNT,OPERATION UNIT MAIN PCB	1	1	1	27
	2AC26060	MOUNT,OUTPUT	1	1	1	28,28
	2AC26080	MOUNT,HIGH VOLTAGE PCB	1	1	1	28,28
	2AC26090	GUIDE,HIGH VOLTAGE WIRE	1	1	1	28,28
	2AC26100	RIGHT MOUNT,OPERATION UNIT	1	1	1	27
	2AC26110	INNER RIGHT MOUNT,OPERATION UNIT	1	1	1	27
	2AC26120	INNER LEFT MOUNT,OPERATION UNIT	1	1	1	27
	2AC26130	LEFT MOUNT,OPERATION UNIT	1	1	1	27
	2AC26140	SUPPORT PLATE,SEQUENCE	1	1	1	28,28
	2AC26150	UPPER RETAINER,SEQUENCE	1	1	1	28,28
	2AC26160	LOWER RETAINER,SEQUENCE	1	1	1	28,28
	2AC26170	SUPPORT PLATE,OUTPUT PCB	2	2	2	28,28
	2AC26180	LID,MAIN PCB ROM	1	1	1	28,28
	2AC26190	MOUNT,DF CONNECTOR	1	1	1	27
	2AC26210	MOUNT,POWER SOURCE SUPPLY(120)	0	0	1	28
	2AC26220	MOUNT,POWER SOURCE SUPPLY(200)	1	1	0	28
	2AC26240	LID,OPTION	1	1	1	28,28
	2AC26250	GROUND PLATE,SCANNER	3	3	1	27,28
	2AC26280	LOWER SUPPORT PLATE,SEQUENCE	1	1	1	28,28
	2AC26290	GROUND PLATE,OPERATION UNIT	1	1	1	27
	2AC26300	SHIELD 10X5X20,GASKET	4	4	0	28
	2AC26310	SHIELD 10X8X20,GASKET	2	2	0	2,28
	2AC26320	HOLDER,GROUND	6	6	6	1,1
◉	2AC27083	IC,ROM MEMORY COPY	1	1	1	28,28
◉	2AC27120	IC,SIMM	1	1	1	28,28
	2AC27330	TOTAL COUNTER	1	1	1	27
	2AC27340	SWITCH,REGISTRATION	1	1	1	8
	2AC27570	WIRE,DRUM UNIT	1	1	1	13
	2AC27580	WIRE,DUPLEX UNIT	1	1	1	24
	2AC27590	JUNCTION WIRING,FEED	1	1	1	5
	2AC27600	WIRE,VERTICAL CONVEYING	3	3	3	7
	2AC27610	WIRE,PRIMARY PAPER FEED	1	1	1	28,28
	2AC27620	JUNCTION WIRING,FEED SHIFT	1	1	1	25
	2AC27630	JUNCTION WIRING,EJECT	1	1	1	26
	2AC27640	JUNCTION WIRING,RESISTANCE SW	1	1	1	8
	2AC27650	WIRE,BYPASS TRAY	1	1	1	7
	2AC27660	WIRE,BYPASS PAPER FEED	1	1	1	6

• Parts with "◉" indicates the Service parts.

SP	Part. No.	Description	Quantity 230V	240V	120V	Fig. No.
	2AC27690	WIRE,TONER SENSOR	1	1	1	14
	2AC27700	REAR WIRE,CASSETTE SW	1	1	1	28,28
	2AC27800	WIRE,SCANNER INVERTER	1	1	1	10
	2AC27810	WIRE,MAIN HIGH VOLTAGE	1	1	1	12
	2AC27820	WIRE,GRID	1	1	1	12
	2AC27830	WIRING,INLET N	1	1	0	28
	2AC27840	WIRING,INLET L	1	1	0	28
	2AC27860	JUNCTION WIRING,CONVEYING	1	1	1	8
	2AC27870	JUNCTION WIRING G,FINISHER	1	1	1	28,28
	2AC27880	WIRE FG,FINISHER	1	1	1	28,28
	2AC27890	JUNCTION WIRING,INTERLOCK	1	1	1	27
	2AC27900	WIRE,NOISE FILTER	1	1	0	28
	2AC27930	WIRE,FIXING	1	1	1	17
	2AC28011	MAIN PCB	1	1	0	28
◉	2AC28030	OPERATION UNIT MAIN PCB	1	1	1	27
◉	2AC28101	HIGH VOLTAGE PCB	0	0	1	28
◉	2AC28120	INVERTER PCB	1	1	1	10
	2AC60020	JUNCTION WIRING,DEHUMIDIFIER HEATE	1	1	1	45
	2AC68031	MEMORY COPY PCB ASS'Y SP	1	1	1	28,28
◉	2AC68080	KEY TOP,PRINT(METRIC)	1	1	0	27
◉	2AC68230	SPECIAL TOOL,FRAME RETAINING	2	2	2	45
◉	2AC68241	SHEET,SCANNER ADJUSTMENT	1	1	1	45
◉	2AC68280	CLEANING ASS'Y SP	1	1	1	16
◉	2AC68300	SHEET,REINFORCEMENT	2	2	2	45
	2AC82020	SET,MEMORY COPY KIT(EXP)	1	1	1	45
◉	2AC82030	DRUM FOR P.S.VI 400	1	1	0	13
◉	2AC82040	DRUM FOR P.S.AI 4040	0	0	1	13
◉	2AC93011	PARTS UPPER SEAL DEVE.(SP)	1	1	1	14
◉	2AC93020	PARTS BRUSH CLEANING(SP)	1	1	1	16
◉	2AC93030	PARTS BLADE CLEANING(SP)	1	1	1	16
	2AC93410	PARTS,OPERATION UNIT PCB SP	1	1	1	27
	2AC93430	PARTS,IMAGE FORMATION ASS'Y SP	3	3	0	13,15,16
	2AC93450	PARTS,IMAGE FORMATION ASS'Y SP(USA	0	0	3	13,15,16
◉	2AC94900	SET,FRONT MC HOUSING,SP	1	1	1	12
◉	2AC94910	SET,REAR MC HOUSING,SP	1	1	1	12
◉	2AC94920	SET,FRONT TRANSFER HOUSING,SP	1	1	1	12
◉	2AC94930	SET,REAR TRANSFER HOUSING,SP	1	1	1	12
	2AD02030	LEFT LOWER FRONT REINFORCEMENT	1	1	1	2
	2AD04050	RIGHT INNER COVER	1	1	1	1
	2AD04060	COVER,DUPLEX UNIT	1	1	1	24
	2AD04070	FRONT HINGE,COVER	1	1	1	1
	2AD04080	MOUNT,HINGE	1	1	1	1
	2AD04090	MOUNT,SAFETY SWITCH	1	1	1	2
	2AD04100	BASE,MAGNET	1	1	1	2
	2AD04130	FRONT POSITIONING PLATE,COVER	1	1	1	1
	2AD05050	LABEL,STOPPER(EUR)	4	0	0	39
	2AD05060	LABEL,DUPLEX COVER	1	1	1	24
	2AD05070	LABEL,PAPER SET ST	1	1	1	40
	2AD27050	INTERLOCK SWITCH	1	1	1	27
	2AD27060	JUNCTION WIRING,INTERLOCK	1	1	1	27
	2AG05200	LABEL,HIGH VOLTAGE CAUTION(EXP)	5	5	5	1,1,20
◉	2AZ22480	BUSHING 8-16,PAPER FEED	4	4	4	7
◉	2A300020	BYPASS TABLE ASS'Y(INCH)	0	0	1	7
◉	2A300030	BYPASS TABLE ASS'Y(METRIC)	1	1	0	7
◉	2A301020	SCANNER DRIVE ASS'Y	1	1	1	9
◉	2A304010	FRONT COVER	1	1	1	1
◉	2A304020	INNER LEFT COVER	2	2	2	1,1
◉	2A304030	LOWER LEFT COVER	2	2	2	1,1
◉	2A304040	INNER RIGHT COVER	2	2	2	1,1
◉	2A304050	LOWER FRONT RIGHT COVER A	2	2	2	1
◉	2A304060	LOWER FRONT RIGHT COVER B	2	2	2	1,1
◉	2A304070	LOWER REAR RIGHT COVER	2	2	2	1,1
◉	2A304080	UPPER LEFT COVER	2	2	2	1,1
◉	2A304090	UPPER RIGHT COVER	2	2	2	1,1
◉	2A304100	UPPER REAR COVER A	2	2	2	1,1
◉	2A304110	UPPER REAR COVER B	2	2	2	1,1
◉	2A304120	LOWER REAR COVER	2	2	2	1,1
◉	2A304130	COVER,EJECT	2	2	2	1,1
◉	2A304160	COVER,HEATER SWITCH	2	2	2	1,1
◉	2A304190	COPY TRAY(EXP)	2	2	2	43,43
◉	2A304240	LID,CONTROLLER	2	2	2	1,1
◉	2A305010	LABEL,MACHINE OPERATION	1	1	1	1
◉	2A305070	LEFT ORIGINAL SIZE INDICATOR	1	1	1	9
◉	2A305080	REAR ORIGINAL SIZE INDICATOR(METRI	1	1	0	9
◉	2A305090	REAR ORIGINAL SIZE INDICATOR(INCH)	0	0	1	9
◉	2A305100	LABEL,ORIGINAL SIZE INDICATOR(METR	1	1	0	9
◉	2A305110	LABEL,ORIGINAL SIZE INDICATOR(INCH	0	0	1	9
◉	2A306010	FRONT CURSOR,BYPASS	1	1	1	7
◉	2A306020	REAR CURSOR,BYPASS	1	1	1	7
◉	2A306030	RIGHT COVER,FEED	1	1	0	7

• Parts with "◉" indicates the Service parts.

SP	Part. No.	Description	Quantity 230V	240V	120V	Fig. No.
◉	2A306050	TABLE A,BYPASS	1	1	1	7
◉	2A306060	TABLE B,BYPASS	1	1	1	7
◉	2A306070	TABLE C,BYPASS	1	1	1	7
◉	2A306080	TABLE D,BYPASS	1	1	1	7
	2A312010	COVER,ISU	1	1	1	11
	2A312020	MOUNT BASE,ORIGINAL DETECTION SENS	1	1	2	9
	2A312030	LID,SCANNER BASE	1	1	1	11
◉	2A324010	OPERATION UNIT(METRIC)	1	1	0	27
◉	2A324020	OPERATION UNIT(INCH)	0	0	1	27
	2A326010	MOUNT,SEQUENCE	1	1	1	28,28
◉	2A327010	SENSOR,HUMIDITY	1	1	1	28,28
	2A327300	WIRE,MAIN	1	1	1	30
	2A327310	WIRE S-BOX,POWER SOURCE	1	1	1	28,28
	2A327320	WIRE,MAIN PCB	1	1	1	29
	2A327340	WIRE,PRIMARY	1	1	1	29
	2A327350	WIRE,ORIGINAL SIZE DETECTION(INCH)	0	0	1	9
	2A327360	WIRE,ORIGINAL SIZE DETECTION(METRI	1	1	0	9
	2A327370	WIRE,SCANNER UNIT	1	1	1	29
	2A327400	WIRE A,SCANNER DRIVE	1	1	1	9
	2A327410	WIRE B,SCANNER DRIVE	1	1	1	9
◉	2A328020	ENGINE OUTPUT PCB	1	1	1	28,28
◉	2A328050	POWER SOURCE PCB(100)	0	0	1	28
◉	2A328060	POWER SOURCE PCB(200)	1	1	0	28
◉	2A368010	ROM MAIN ASS'Y SP	1	1	1	28,28
◉	2A368020	ROM ENGINE ASS'Y SP	1	1	1	28,28
◉	2A368030	ROM OPERATION UNIT ASS'Y SP	1	1	1	27
◉	2A368040	ROM FONT1 ASS'Y SP	0	0	1	27
◉	2A368050	ROM FONT2 ASS'Y SP	1	1	0	27
◉	2A368060	ROM SCANNER ASS'Y SP	1	1	1	28,28
◉	2A368070	ISU ASS'Y	1	1	1	9
◉	2A368100	MAIN PCB ASS'Y SP	1	1	1	28,28
◉	2A368200	KEY TOP,PRINT(INCH)	0	0	1	27
◉	2A368220	KEY TOP,RESET(METRIC)	1	1	0	27
◉	2A368230	KEY TOP,RESET(INCH)	0	0	1	27
◉	2A368240	KEY TOP 10,KEY	1	1	1	27
◉	2A368250	KEY TOP,FUNCTION KEY(METRIC)	1	1	0	27
◉	2A368270	KEY TOP,FUNCTION KEY(INCH)	0	0	1	27
◉	2A368290	HOUSING,OPERATION UNIT(METRIC)	1	1	0	27
◉	2A368300	HOUSING,OPERATION UNIT(INCH)	0	0	1	27
◉	2A368320	KEY TOP,STOP(METRIC)	1	1	0	27
◉	2A368330	KEY TOP,STOP(INCH)	0	0	1	27
◉	2A404010	FRONT COVER	1	1	1	1
◉	2A404020	LOWER FRONT RIGHT COVER	1	1	1	1
◉	2A404030	LOWER FRONT LEFT COVER	1	1	1	1
◉	2A405010	LABEL,MACHINE OPERATION	1	1	1	1
◉	2A468010	MAIN PCB ASS'Y SP	1	1	1	28,28
	20305071	LABEL,CAUTION CONTACT GLASS	1	1	1	11
	20305080	LABEL,HIGH TEMPERATURE CAUTION(EXP	0	1	1	17
	20305130	LABEL L,HIGH TEMPERATURE CAUTION(E	0	2	2	17
◉	28107400	BEARING,688ZZNR	2	2	2	10
	29407610	SPONGE,MOTOR PF	1	1	1	31
	29717150	PRESSING SPRING,FEED BACK	2	2	2	6
	29717220	PRESSING SPRING B,SB	4	4	4	22,25
◉	29717230	BUSHING 6,FEED BACK	5	5	5	14,15,16
◉	29721040	GEAR,24 SB	1	1	1	20
	29806310	COIL SPRING,FRICTION	1	1	1	14
◉	29806490	GEAR 16T	2	2	2	4
◉	29806560	BUSHING 6	4	4	4	35,36
◉	29806810	BUSHING,6 REGISTRATION	5	5	5	8,17,22
◉	29807100	GEAR 16,BYPASS	1	1	1	6
◉	29812050	SPRING,WIRE ROPE	1	1	1	34
	29812291	CUSHION,CONTACT GLASS	9	9	9	10
◉	29814340	GEAR 18,DEVELOPER UNIT	2	2	2	6
	29820110	FRONT PIN,FULCRUM	6	6	6	7,16,32
◉	29822140	BUSHING,DRUM SHAFT	1	1	1	16
◉	29822230	GEAR 16T,PF IDLE	1	1	1	6
	29912420	HOLDER,WIRE ROPE	2	2	2	10
	29927231	POWER CODE AS(240)	0	1	0	28
◉	3AK08360	BELT,LEADING FEED	1	1	1	34
	3AL02050	MOUNT,RELEASE SWITCH	1	1	1	32
	3AL02060	MOUNT,DF PCB	2	2	2	32
	3AL02070	STOPPER,ORIGINAL DETECTION SWITCH	1	1	1	32
	3AL02080	HOLDER,SPRING	1	1	1	32
	3AL02100	GUIDE,INTERFACE WIRE	1	1	1	32
	3AL02110	DIAL,JAM REMOVEMENT	1	1	1	36
	3AL02121	MOUNT,JAM REMOVEMENT DIAL	1	1	1	36
◉	3AL02150	GEAR 24,JAM REMOVEMENT	1	1	1	36
◉	3AL02160	GEAR 14,JAM REMOVEMENT	1	1	1	36
◉	3AL02170	GEAR 14,JOINT	1	1	1	36
	3AL02190	GUIDE B,WIRE PAPER FEED MOTOR	1	1	1	37

• Parts with "◉" indicates the Service parts.

SP	Part. No.	Description	Quantity 230V	240V	120V	Fig. No.
	3AL02200	SPACER,SRDF	1	1	1	32
	3AL03012	LEFT HINGE	1	1	1	32
	3AL03023	RIGHT HINGE	1	1	1	32
	3AL03031	LEFT STAY,HINGE	1	1	1	32
	3AL03043	RIGHT STAY,HINGE	1	1	1	32
	3AL03050	PIN,HINGE ADJUSTMENT(M)	1	1	1	32
	3AL04060	MAT,ORIGINAL HOLDER	1	1	1	31
◉	3AL04080	FILM,ORIGINAL HOLDER	2	2	2	31
◉	3AL04090	FRONT COVER(K M)	1	1	1	31
◉	3AL04100	REAR COVER(K M)	1	1	1	31
◉	3AL04110	RIGHT COVER(K M)	1	1	1	31
◉	3AL04120	LEFT COVER(K M)	1	1	1	31
◉	3AL04130	COVER,PAPER FEED(K M)	1	1	1	31
◉	3AL04140	STOPPER,EJECT ORIGINAL(K M)	1	1	1	31
◉	3AL04150	HANDLE,HOOK(K M)	1	1	1	31
◉	3AL05040	LABEL,ORIGINAL SIZE(METRIC)	1	1	1	33
◉	3AL05050	LABEL,ORIGINAL SIZE(INCH)	0	0	1	33
◉	3AL05060	LABEL,ORIGINAL CURSOR(METRIC)	1	1	1	33
◉	3AL05070	LABEL,ORIGINAL CURSOR(INCH)	0	0	1	33
◉	3AL05080	LABEL,ORIGINAL SET	1	1	1	31
◉	3AL05090	LABEL,JAM REMOVEMENT	1	1	1	31
◉	3AL05100	LABEL,ORIGINAL INDICATIONÅiEUR)	1	1	1	31
◉	3AL05111	LABEL,OPERATION	1	1	1	31
◉	3AL06041	RACK,TABLE	2	2	2	33
◉	3AL06052	COVER,TABLE	1	1	1	33
	3AL06060	MOUNT,SIZE DETECTION	1	1	1	33
	3AL06072	FRONT SUPPORT PLATE,TABLE	1	1	1	33
	3AL06090	CUSHION,ORIGINAL GUIDE	2	2	2	33
	3AL06102	FULCRUM PIN,TABLE	2	2	1	33
◉	3AL06120	TABLE,ORIGINAL(K M)	1	1	1	33
◉	3AL06130	FRONT GUIDE,ORIGINAL(K M)	1	1	1	33
◉	3AL06140	REAR GUIDE,ORIGINAL(K M)	1	1	1	33
◉	3AL06150	COVER,ORIGINAL GUIDE(K M)	1	1	1	33
◉	3AL07010	PULLEY,LEADING FEED	1	1	1	34
◉	3AL07020	PULLEY,PAPER FEED	1	1	1	34
◉	3AL07031	PULLEY,SEPARATION	1	1	1	34
	3AL07040	UPPER GUIDE,PAPER FEED	1	1	1	34
	3AL07051	LOWER GUIDE,PAPER FEED	1	1	1	34
	3AL07060	ARM,LEADING FEED	1	1	1	34
	3AL07070	STOPPER,ORIGINAL	2	2	2	34

SP	Part. No.	Description	Quantity 230V	240V	120V	Fig. No.
	3AL07081	MOUNT,SEPARATION PULLEY	1	1	1	34
	3AL07100	SHAFT,LEADING FEED	1	1	1	34
	3AL07110	FRONT SHAFT,PAPER FEED	1	1	1	34
	3AL07120	REAR SHAFT,PAPER FEED	1	1	1	34
	3AL07130	SHAFT,SEPARATION	1	1	1	34
	3AL07160	LEVER,LIFT	1	1	1	34
◉	3AL07180	JOINT,LIFT SOLENOID	1	1	1	34
	3AL07220	STOPPER,ORIGINAL STOPPER	1	1	1	34
	3AL07230	PIN,PAPER FEED	3	3	3	35,36
	3AL07260	FRONT HOOK,LEFT COVER	1	1	1	31
	3AL07270	REAR HOOK,LEFT COVER	1	1	1	31
	3AL07290	SHAFT,HOOK	1	1	1	31
	3AL07300	WEIGHT,LEADING FEED	1	1	1	34
◉	3AL07310	FILM,SEPARATION	1	1	1	34
	3AL07320	SPRING,SEPARATION	2	2	2	34
◉	3AL07330	PAD,SEPARATION	2	2	2	34
	3AL08013	LEFT GUIDE,REGISTRATION	1	1	1	36
	3AL08021	RIGHT GUIDE,REGISTRATION	1	1	1	36
	3AL08033	GUIDE,CONVEYING	1	1	1	36
	3AL08051	GUIDE,REGISTRATION	1	1	1	35
	3AL08061	GUIDE,EJECT	1	1	1	35
	3AL08072	GUIDE,READING	1	1	1	36
	3AL08080	GUIDE,EJECT FEED SHIFT	1	1	1	36
◉	3AL08091	ROLLER,REGISTRATION	1	1	1	36
◉	3AL08100	INNER PULLEY,CONVEYING	2	2	2	36
◉	3AL08112	LOWER ROLLER,CONVEYING	1	1	1	36
◉	3AL08122	INNER ROLLER,CONVEYING	1	1	1	36
◉	3AL08130	ROLLER,EJECT	1	1	1	36
◉	3AL08140	UPPER PULLEY,CONVEYING	2	2	2	31
◉	3AL08161	UPPER ROLLER,CONVEYING	1	1	1	36
◉	3AL08170	PULLEY,EJECT	4	4	4	35,35
	3AL08180	UPPER SHAFT,CONVEYING PULLEY	1	1	1	31
	3AL08190	LOWER SHAFT,CONVEYING PULLEY	1	1	1	36
	3AL08200	INNER SHAFT,CONVEYING PULLEY	1	1	1	36
	3AL08210	SHAFT,EJECT PULLEY	2	2	2	35
	3AL08220	UPPER PLATE SPRING,CONVEYING PULLE	2	2	2	31
	3AL08240	LOWER PLATE SPRING,CONVEYING PULLE	2	2	2	36
	3AL08250	INNER PLATE SPRING,CONVEYING PULLE	2	2	2	36
	3AL08260	PLATE SPRING,EJECT GUIDE	2	2	2	35
	3AL08270	PLATE SPRING,REGISTRATION GUIDE	2	2	2	31

• Parts with "◉" indicates the Service parts.

SP	Part. No.	Description	Quantity 230V	240V	120V	Fig. No.
	3AL08280	MOUNT,CONVEYING PULLEY	1	1	1	36
	3AL08291	MOUNT,TIMING SWITCH	1	1	1	36
◉	3AL08302	COVER,CONVEYING PULLEY	1	1	1	36
	3AL08310	MOUNT,EJECT SOLENOID	1	1	1	36
	3AL08330	LEVER,EJECT	1	1	1	36
	3AL08341	LEVER,EJECT SOLENOID	1	1	1	36
	3AL08360	STOPPER,LEFT COVER FRONT	1	1	1	31
	3AL08370	STOPPER,LEFT COVER REAR	1	1	1	31
	3AL08380	HANDLE,REGISTRATION GUIDE	1	1	1	35
◉	3AL08401	SHEET,ORIGINAL HOLDER	1	1	1	36
◉	3AL08410	SHEET,GUIDE EJECT	1	1	1	35
◉	3AL08421	OUTER SHEET,GUIDE CONVEYING	2	2	2	36
◉	3AL08430	INNER SHEET,GUIDE CONVEYING	1	1	1	36
◉	3AL08450	SHEET,GUIDE PLATE EJECT	1	1	1	36
	3AL08470	SHAFT,REGISTRATION PULLEY	1	1	1	35
◉	3AL08480	FRONT PULLEY,READING	2	2	2	36
◉	3AL08490	SPRING,EJECT FEED SHIFT	1	1	1	35
◉	3AL08500	PULLEY,REGISTRATION	6	6	6	31,35
◉	3AL08510	SHEET,GUIDE REGISTRATION	1	1	1	35
◉	3AL08520	SHEET,REGISTRATION	2	2	2	35
◉	3AL08530	INNER SHEET,GUIDE CONVEYING LARGE	1	1	1	36
	3AL08560	SPRING,EJECT PULLEY	4	4	4	35
	3AL08570	GUIDE,TIMING SWITCH	1	1	1	36
◉	3AL08590	UPPER SHEET B,CONVEYING PULLEY	2	2	2	35
	3AL10011	GUIDE,LOOP	1	1	1	35
◉	3AL10020	ROLLER,LOOP	1	1	1	35
	3AL10031	GUIDE,LOOP FEED SHIFT	1	1	1	35
	3AL10040	SHAFT,FULCRUM PULLEY	1	1	1	35
	3AL10060	SHAFT,LOOP PULLEY	1	1	1	35
	3AL10072	LIGHT SHIELD,LOOP	1	1	1	36
	3AL10081	LEVER,LOOP FEED SHIFT	1	1	1	35
	3AL10091	LEVER,LOOP PULLEY SOLENOID	1	1	1	35
	3AL10100	LEVER,LOOP PULLEY	1	1	1	35
	3AL10110	LEVER,LOOP FEED SHIFT SOLENOID	1	1	1	35
	3AL10120	FRONT HOLDER,LOOP PULLEY	1	1	1	35
	3AL10131	MOUNT,LIGHT SHIELD	1	1	1	36
	3AL10143	MOUNT,LOOP PULLEY SOLENOID	1	1	1	35
	3AL10151	MOUNT,LOOP SWITCH	1	1	1	36
	3AL10165	LEFT GUIDE,LOOP	1	1	1	35
◉	3AL10170	SHEET,GUIDE LOOP	1	1	1	35
◉	3AL10181	LEFT SHEET,GUIDE LOOP	1	1	1	35
	3AL10190	SPRING,LIGHT SHIELD	1	1	1	36
	3AL10200	REAR HOLDER,LOOP PULLEY	1	1	1	35
◉	3AL10210	SHEET,LOOP PULLEY	2	2	2	35
	3AL10230	SPRING,LOOP PULLEY SOLENOID	1	1	1	35
	3AL10280	LOWER LEFT SHEET B,GUIDE LOOP	1	1	1	35
◉	3AL22010	PULLEY T35/T22/Z22	1	1	1	37
◉	3AL22020	PULLEY T28/Z18	1	1	1	37
◉	3AL22030	GEAR Z22/T35P2M	1	1	1	37
◉	3AL22040	GEAR Z18/T25P2M	1	1	1	36
◉	3AL22050	BELT 190,PAPER FEED MOTOR	1	1	1	37
◉	3AL22060	BELT 112,REGISTRATION ROLLER	1	1	1	37
◉	3AL22070	BELT 140,MIDDLE ROLLER	1	1	1	36
	3AL22080	TENSION PLATE,MIDDLE ROLLER BELT	1	1	1	36
	3AL22090	MOUNT,IDLE GEAR	1	1	1	37
	3AL22101	MOUNT,PAPER FEED MOTOR	1	1	1	37
	3AL22111	MOUNT,CONVEYING MOTOR	1	1	1	37
◉	3AL22130	BELT 100,CONVEYING	2	2	2	36,37
◉	3AL22140	BUSHING 686	4	4	4	36
	3AL27011	MOTOR,PAPER FEED	2	2	2	37
	3AL27020	WIRE,PAPER FEED	1	1	1	38
	3AL27030	WIRE,TABLE	1	1	1	33
	3AL27040	WIRE,INTERFACE	1	1	1	38
	3AL27050	SWITCH,ORIGINAL SET	1	1	1	34
	3AL27060	SWITCH,FEED	1	1	1	34
◉	3AL27070	SOLENOID,LEADING FEED	1	1	1	34
◉	3AL27080	SOLENOID,FEED SHIFT	2	2	2	35,36
◉	3AL27111	SOLENOID,LOOP PULLEY	1	1	1	35
	3AL27120	SWITCH,TIMING	1	1	1	36
◉	3AL28020	SET LED PCB	1	1	1	34
◉	3AL93010	PARTS,CLUTCH PAPER FEED,SP	1	1	1	34
◉	3AL93020	PARTS,DRIVER PCB,SP	1	1	1	38
◉	33420210	BEARING,HEAT ROLLER	2	2	2	17
◉	33420220	BUSHING,HEAT ROLLER	2	2	2	17
◉	33522100	BELT 117,VERTICAL CONVEYING	1	1	1	10
◉	33900940	CLEANING PAD ASS'Y	1	1	1	12
	33902060	RIGHT REINFORCEMENT	3	3	3	2
	33902070	LEFT MOUNT,RAIL	2	2	2	2
	33902120	HOOK,CASSETTE RETAINING	2	2	2	2
	33902130	SPRING,CASSETTE HOOK	2	2	2	2

• Parts with "◉" indicates the Service parts.

SP	Part. No.	Description	Quantity			Fig. No.
			230V	240V	120V	
	33902140	SHAFT,CASSETTE LOCK	1	1	1	2
	33902150	STOPPER,CASSETTE LOCK	3	3	3	2
◉	33902160	SPRING,CASSETTE LOCK	1	1	1	2
	33904130	FRONT HINGE,COVER	2	2	2	1
	33904310	RIGHT BASE,HINGE	1	1	1	1
	33904320	LEFT BASE,HINGE	1	1	1	1
	33904380	LOWER PROTECTING PLATE,FEED	1	1	1	1
	33905010	LABEL,TONER CARTRIDGE	1	1	1	15
◉	33905020	LABEL,CASSETTE OPERATION	2	2	2	3,3
	33906012	UPPER HOUSING,PAPER FEED	2	2	2	4
	33906030	LOWER HOUSING,PAPER FEED	2	2	2	4
	33906040	SUPPORT PLATE,LEADING FEED PULLEY	2	2	2	4
◉	33906060	LOWER PULLEY,PAPER FEED	3	3	3	4,6
◉	33906070	TORQUE LIMITER,PAPER FEED	2	2	2	4
	33906080	SHAFT,LEADING FEED PULLEY	2	2	2	4
◉	33906090	LOWER LEVER,PAPER FEED PULLEY RELE	2	2	2	4
	33906100	REINFORCEMENT,PAPER FEED HOUSING	2	2	2	4
◉	33906110	CLUTCH,PAPER FEED	2	2	2	4
◉	33906130	CLUTCH,BYPASS	1	1	1	6
	33906140	SWITCH,VERTICAL CONVEYING	4	4	4	5,7
	33906150	ACTUATOR,PAPER EMPTY	2	2	2	4
◉	33906160	GEAR 16,PAPER FEED	2	2	2	4
	33906180	WEIGHT,LEADING FEED PULLEY	3	3	3	4,22
◉	33906190	LOWER SPRING,PAPER FEED	2	2	2	4
	33906211	VIBRATION INSULATOR,RELEASE LEVER	4	4	4	4
◉	33906220	PAD,BYPASS CURSOR	2	2	2	7
	33906291	UPPER REINFORCEMENT,HOUSING PAPER	2	2	2	4
	33906340	SWITCH,FEED	1	1	1	5
◉	33906370	SOLENOID,BYPASS	1	1	1	6
◉	33906390	SPRING,SHAFT STOPPER	1	1	1	6
	33906400	FRICTION PLATE,BYPASS	1	1	1	6
◉	33906430	TORQUE LIMITER,BYPASS	1	1	1	6
	33906441	UPPER GUIDE,BYPASS	1	1	1	6
	33906460	SHAFT,BYPASS PAPER FEED	1	1	1	6
◉	33906470	PULLEY,LEADING FEED	1	1	1	6
◉	33906610	BEARING,FEED	5	5	5	5,7
	33906620	MOUNT BASE,PAPER FEED SWITCH	4	4	4	5,7
	33906630	STOPPER 5,RING	10	10	10	4,7
◉	33906640	RIGHT SPRING,FEED RELEASE	3	3	3	1,1,7
◉	33906660	RIGHT PULLEY,FEED	10	10	10	7,22
	33906670	RIGHT HOOK,FEED RELEASE	6	6	6	1,1,7
	33906690	RIGHT SHAFT,FEED RELEASE	3	3	3	1,1,7
	33906700	GUIDE,CONFLUENCE	2	2	2	7
	33906750	RIGHT MOUNT,FEED RELEASE SWITCH	1	1	1	28,28
	33906770	RIGHT FULCRUM PIN,COVER FEED	1	1	1	7
	33906780	LEFT GUIDE,FEED	3	3	3	7
	33906790	RIGHT ARM,FEED RELEASE	1	1	1	7
	33906880	STOPPER,BYPASS TABLE	2	2	2	7
	33906900	COVER,CURSOR	1	1	1	7
	33906941	MOUNT,STOPPER	1	1	1	6
	33906950	SHAFT,LEADING FEED PULLEY BYPASS	1	1	1	6
	33906980	LEVER,STOPPER RELEASE	1	1	1	6
	33906990	SWITCH,BYPASS SIZE DETECTION	1	1	1	7
	33907012	CASSETTE	2	2	2	3,3
	33907020	WORK PLATE,CASSETTE	2	2	2	3,3
	33907030	WORK PLATE,LIFT CASSETTE	2	2	2	3,3
	33907050	RAIL A,CURSOR	2	2	2	3,3
	33907060	CURSOR A,CASSETTE	2	2	2	3,3
	33907070	CURSOR B,CASSETTE	2	2	2	3,3
	33907080	LEVER,CASSETTE CURSOR	4	4	4	3,3
	33907090	LID A,CURSOR	2	2	2	3,3
◉	33907100	RACK,CASSETTE	4	4	4	3,3
◉	33907110	TERMINAL,PAPER SIZE PCB	1	1	3	3,7
	33907120	RAIL C,CURSOR	2	2	2	3,3
	33907130	CURSOR C,CASSETTE	2	2	2	3,3
	33907140	LID C,CURSOR	2	2	2	3,3
	33907160	LID,PAPER SIZE DETECTION	0	0	2	3
	33907170	DETECTION PLATE,PAPER SIZE	0	0	2	3
	33907180	DETECTION PLATE,CASSETTE	2	2	0	3
	33907190	GROUND PLATE,CASSETTE	2	2	2	3,3
	33907200	MOUNT,PAPER SIZE DETECTION	2	2	2	28,28
	33907210	CUSHION,CASSETTE WORK PLATE	4	4	4	3,3
	33910230	PIN,CHARGER	3	3	3	12,12
◉	33912150	PULLEY,WIRE	8	8	8	10
	33914030	STAY,DOCTOR BLADE	1	1	1	14
	33914040	REINFORCEMENT,DOCTOR BLADE ADJUSTM	1	1	1	14
	33914060	COVER,DEVELOPING	1	1	1	14
	33914070	SPIRAL A,DEVELOPING	1	1	1	14
	33914080	SPIRAL B,DEVELOPING	1	1	1	14
	33914090	SPIRAL C,DEVELOP	1	1	1	14

• Parts with "◉" indicates the Service parts.

SP	Part. No.	Description	Quantity 230V	240V	120V	Fig. No.
◉	33914110	GEAR,DEVELOPING SLEEVE	1	1	1	14
◉	33914120	GEAR,DEVELOPING INPUT	1	1	1	14
◉	33914130	GEAR A,SPIRAL	1	1	1	14
◉	33914140	FRONT GEAR B,SPIRAL	1	1	1	14
◉	33914150	GEAR C,SPIRAL	1	1	1	14
◉	33914160	REAR GEAR B,SPIRAL	1	1	1	14
◉	33914170	GEAR A,DEVELOPING IDLE	1	1	1	14
◉	33914180	GEAR B,DEVELOPING IDLE	1	1	1	14
◉	33914190	TONER SENSOR	1	1	1	14
◉	33914200	SPONGE A,DEVELOPING	2	2	2	14
◉	33914210	GEAR,TONER SUPPLY	1	1	1	14
	33914220	SHAFT,TONER SUPPLY	1	1	1	14
	33914230	HOLDER,DEVELOPING	2	2	2	13
	33914240	HOLDER,SUB HOPPER	1	1	1	13
	33914250	PRESSING PLATE,DEVELOPING	1	1	1	13
◉	33914290	FRONT FILM,DEVELOPING	1	1	1	14
◉	33914300	REAR FILM,DEVELOPING	1	1	1	14
◉	33914310	SPONGE A,COVER DEVELOPING	1	1	1	14
◉	33914320	SPONGE B,COVER DEVELOPING	2	2	2	14
◉	33914330	SPONGE C,COVER DEVELOPING	1	1	1	14
◉	33914340	FRONT SEAL,DEVELOPING UNIT	1	1	1	14
◉	33914350	REAR SEAL,DEVELOPING UNIT	1	1	1	14
◉	33914370	COUPLING,SUB HOPPER DRIVE	1	1	1	14
	33914380	SPACER,TONER SENSOR	1	1	1	14
◉	33915090	GEAR,RECYCLE IDLE	1	1	1	15
◉	33915100	GEAR A,CARTRIDGE DRIVE	0	0	1	15
◉	33915110	GEAR B,CARTRIDGE DRIVE	0	0	1	15
	33915120	LID,DETACHING LEVER	1	1	1	15
	33915170	SPONGE B,RECYCLE	2	2	2	15
◉	33915180	TONER EMPTY DETECTION SENSOR	2	2	2	15
	33915201	PADDLE A,RECYCLE	1	1	1	15
	33915220	FILM A,PADDLE	2	2	2	15
◉	33915240	GEAR,CARTRIDGE DRIVE IDLE	1	1	1	15
	33915250	SPRING,CARTRIDGE DRIVE	2	2	2	15
	33915270	RETAINER,CARTRIDGE PRESSURE	2	2	2	15
	33915280	CAP,CARTRIDGE PRESSURE	2	2	2	15
	33915290	SPRING,CARTRIDGE PRESSURE	2	2	2	15
◉	33915310	FRONT BUSHING,CLEANING SPIRAL	1	1	1	15
◉	33915330	GEAR C,CARTRIDGE DRIVE	1	1	0	15
◉	33915340	GEAR D,CARTRIDGE DRIVE	1	1	0	15
◉	33915540	COUPLING,SUB HOPPER	1	1	1	15
	33915550	SHUTTER,SUB HOPPER	1	1	1	15
	33915560	COVER,SUB HOPPER SHUTTER	1	1	1	15
	33915570	SPRING,SUB HOPPER	1	1	1	15
	33916150	MOUNT,CONVEYING RELEASE SHAFT	1	1	1	8
◉	33916240	PULLEY,CONVEYING	3	3	3	8
◉	33917080	REAR LID,TRANSFER	1	1	1	12
	33917200	SPIRAL,CHARGER CLEANING	1	1	1	12
	33917211	WORK PLATE,CLEANING SLIDER	1	1	1	12
	33917230	SLIDER,TRANSFER CLEANING	2	2	2	12
◉	33917260	FRONT LID,TRANSFER SHEET	1	1	1	12
	33918030	PIN,BLADE	1	1	1	12
◉	33918100	GEAR 18,FUR BRUSH	2	2	2	35,36
◉	33918130	BUSHING,SPIRAL	1	1	1	16
	33918260	SPRING,THRUST	1	1	1	16
	33918270	LEVER,BLADE RELEASE	1	1	1	16
	33920010	FRONT FRAME,FIXING	1	1	1	17
	33920020	REAR FRAME,FIXING	1	1	1	17
	33920031	STAY,FIXING	1	1	1	17
	33920070	COVER,FIXING	1	1	1	17
◉	33920140	GEAR,HEAT ROLLER	1	1	1	17
	33920150	FRONT PRESSING PLATE,FIXING	1	1	1	17
	33920160	REAR PRESSING PLATE,FIXING	1	1	1	17
	33920170	SHAFT,PRESSURE ROLLER	1	1	1	17
◉	33920180	SPRING,PRESSURE	2	2	2	17
	33920190	BOLT,PRESSURE	2	2	2	17
	33920210	FRONT GUIDE,FIXING	1	1	1	17
◉	33920250	SPRING,SEPARATION CLAW	7	7	7	17
	33920260	FRONT SUPPORT PLATE,HEATER	1	1	1	17
	33920270	REAR SUPPORT PLATE,HEATER	1	1	1	17
	33920280	MOUNT,FIXING DRAWER	1	1	1	17
	33920300	SHAFT,FIXING DRIVE	1	1	1	17
	33920310	DIAL,FIXING DRIVE	1	1	1	17
◉	33920320	JOINT,FIXING DRIVE	1	1	1	17
◉	33920330	SPRING,FIXING DRIVE	1	1	1	17
◉	33920340	THERMISTER,FIXING	1	1	1	17
◉	33920560	SWITCH,FIXING	1	1	1	17
	33920570	PIN,FIXING COVER	2	2	2	17
	33920580	STOPPER,HEAT ROLLER	2	2	2	17
◉	33920600	THERMOSTAT 140,FIXING	1	1	1	17

• Parts with "◉" indicates the Service parts.

SP	Part. No.	Description	Quantity			Fig. No.
			230V	240V	120V	
	33920701	UPPER GUIDE B,FIXING	1	1	1	17
	33920711	SHAFT,SEPARATION CLAW	1	1	1	17
	33920750	SHAFT,SEPARATION CLAW PRESS ROLLER	4	4	4	17
	33920760	MOUNT B,FIXING SWITCH	1	1	1	17
	33920780	MOUNT B,PRESS ROLLER SEPARATION CL	4	4	4	17
◉	33920790	SPRING,SEPARATION CLAW PRESS ROLLE	4	4	5	17
◉	33921140	GEAR 26,EJECT DRIVE	2	2	2	19
	33921190	STRAP,EJECT	1	1	1	26
◉	33922241	PULLEY 31/42,IDLE	2	2	2	18
◉	33922330	GEAR 30,IDLE	4	4	4	18,19,20
◉	33922370	BUSHING,DRUM DRIVE	1	1	1	20
◉	33922380	COUPLING,DRUM DRIVE	1	1	1	20
◉	33922390	COUPLING,DEVELOPING DRIVE	1	1	1	20
◉	33922400	JOINT,DEVELOPING DRIVE	1	1	1	20
◉	33922460	SPRING,DEVELOPING DRIVE	1	1	1	20
◉	33922470	BUSHING,DUPLEX DRIVE	1	1	1	19
	33925050	CUSHION,LCD LARGE	2	2	2	27
	33925060	CUSHION,LCD SMALL	2	2	2	27
◉	33926150	BARRIER,TABLET	1	1	1	27
	33927090	WIRE,LCD JUNCTION	1	1	1	27
	33927160	WIRE,PAPER FEED UNIT	2	2	2	4
	33927210	WIRE,CASSETTE UNIT	0	0	2	3
	33927410	WIRE,DEVELOPING BIAS	1	1	1	14
	33927450	RETAINING PIN,DRAWER	6	6	6	28,28
	33927580	CORE 9-20X32	1	1	1	27
	33927590	CORE 7-15X18	2	2	1	9,27
◉	33927600	TABLET B,OPERATION	1	1	1	27
◉	33928040	LCD PCB	1	1	1	27
◉	33928111	SIZE DETECTION PCB	1	1	3	3,7
◉	33960020	HEATER,CASSETTE (240)	4	4	0	43,45
	33968180	UPPER PAPER FEED SHAFT ASS'Y	2	2	2	4
	33968191	LOWER PAPER FEED SHAFT ASS'Y	2	2	2	4
	33968200	SEPARATION PULLEY SHAFT ASS'Y	1	1	1	6
	33968210	JOINT SHAFT ASS'Y	1	1	1	6
	33968220	CASSETTE LIFT SHAFT ASS'Y	2	2	2	3,3
	34022050	FLYWHEEL A	1	1	1	20
	34022060	FLYWHEEL B	2	2	2	20
◉	34027070	RELAY 4P,POWER	1	1	1	28,28
	34027120	MOUNT BASE,POWER RELAY	1	1	1	28,28
◉	34806090	PULLEY,LEADING FEED	2	2	2	4

SP	Part. No.	Description	Quantity			Fig. No.
			230V	240V	120V	
	34806140	STOPPER 4	8	8	8	7,18,20
	34806150	STOPPER 5	8	8	8	10,34
	34816080	SHAFT,CONVEYING RELEASE PULLEY	2	2	2	8
	34816120	SPRING,CONVEYING	1	1	1	8
	34816151	HANDLE,CONVEYING RELEASE	1	1	1	8
◉	34817260	TERMINAL,TRANSFER CONNECTOR	2	2	2	20,28,28
◉	34817270	TERMINAL,SEPARATION CONNECTOR	1	1	1	28,28
◉	34820240	SEPARATION CLAW,PRESS ROLLER	4	4	4	17
	34860010	LABEL,ON	1	1	1	45
	34860020	LABEL,OFF	1	1	1	45
◉	34860030	HEATER,CASSETTE(120)	0	0	4	43,45
◉	34909030	FRONT BUSHING,DRUM SHAFT	1	1	1	20
	34920190	GROUND PLATE,FIXING UNIT	2	2	2	37,37
	34922530	COLLAR,PULLEY	1	1	1	22
◉	34927070	FAN,COOLING	1	1	1	16
	35327400	SWITCH,FEED	1	1	1	9
◉	35911450	CONTACT GLASS,ADF	1	1	1	9
◉	35911731	SPRING,EJECT PULLEY ADF	1	1	1	32
◉	35912010	CONTACT GLASS	1	1	1	9
◉	35912060	PULLEY,SCANNER DRUM	2	2	2	10
◉	35912200	STANDARD PLATE,SHADING	1	1	1	9
	35912210	SPRING,MIRROR HOLDER	2	2	2	10
◉	35912340	PULLEY,SCANNER DRIVE	1	1	1	10
	35912360	GUIDE FFC2	1	1	1	10
	35912490	FRONT ORIGINAL SIZE INDICATOR	1	1	1	9
	35912531	SPONGE,ORIGINAL SIZE INDICATOR	1	1	1	9
◉	35927290	SENSOR,ORIGINAL DETECTION	1	1	2	9
◉	35968110	STOPPER WIRE ASS'Y SP	2	2	2	45
	36512430	BASE RUBBER,SCANNER SECTION	4	4	4	9
	36707740	MAGNET,DECK	1	1	1	39
	36707750	SLIDER,DECK	2	2	2	39
	36707760	WIRE,DECK	1	1	1	39
◉	36707770	MOTOR,DECK	2	2	2	39
	36707790	SHAFT R,SENSOR LEVER	7	7	7	41
	36707800	MOUNT,R SENSOR	2	2	2	39
	36707810	LEFT MOUNT,DECK	1	1	1	40
	36707820	RETAINING PIN,DECK COVER	10	10	10	40
	36707830	WASHER,DECK COVER	8	8	8	40
	36708090	GROUND PLATE,STAY DRUM	3	3	3	11
◉	36722540	GEAR 26,IDLE	1	1	1	19

• Parts with "◉" indicates the Service parts.

SP	Part. No.	Description	Quantity			Fig. No.
			230V	240V	120V	
	36723590	FLANGE 30,BELT	1	1	1	20
	36827140	SWITCH A,INTERLOCK	2	2	2	32,34
	41525016	SOCKET,KEY COUNTER	2	2	2	45
	41529121	SOCKET ASS'Y KEY COUNTER	1	1	1	45
◉	42929503	TUNGSTEN WIRE(50M)	1	1	1	12
◉	45528100	BUSHING 688ADD	1	1	1	14
◉	45569005	CENTRAL BEARING	1	1	1	20
◉	45727303	GEAR 26,CLUTCH	5	5	5	8,18,19,22
	45727501	GEAR,TONER FEED ROLLER	2	2	2	4
◉	45728105	GEAR 24,DEV.UNIT	2	2	2	15
◉	45728111	IDLE GEAR 20,FIXING UNIT	1	1	1	15
◉	45728116	GEAR 28,JOINT	1	1	1	22
◉	45729301	GEAR,ONE WAY DRIVE	1	1	1	19
◉	45729403	GEAR 19,S.B	2	2	2	25
◉	45729416	GEAR,TONER ROLLER	1	1	1	26
◉	45729420	GEAR,LOWER TRANSFER ROLLER	1	1	1	26
	48128107	PIN,CLEANING BLADE	2	2	2	17
	48129000	PIN,ORIGINAL HOLDER	1	1	1	22
	48129208	PIN,TENSION	1	1	1	17
◉	48527200	SPRING,CHARGER	3	3	3	12,12
	48527321	SPRING,CLEANING UNIT LEVE	1	1	1	22
	48827222	SEAL FELT B	2	2	2	15
◉	48928800	PULLEY,TIMING BELT	1	1	1	36
◉	49028116	BUSHING 6,CLEANING UNIT	3	3	3	15
	5AA08360	BUSH-6P	13	13	13	41,42
	5AA08420	BUSH-8P	4	4	4	40
	51608690	GER-1.0-24	8	8	8	40
	53302010	RIGHT MOUNT,SIDE FRONT COVER	1	1	1	39
	53302020	LEFT MOUNT,SIDE FRONT COVER	1	1	1	39
◉	53304010	LOWER FRONT COVER STD	1	1	1	40
◉	53304020	UPPER FRONT COVER STD	1	1	1	40
◉	53304030	REAR COVER STD	1	1	1	39
◉	53304040	SIDE FRONT COVER STD	2	2	2	39
◉	53307010	LEVER,R SENSOR	2	2	2	39
	53307020	SLIDER MG	4	4	4	40
	53307040	MOUNT,MG STOPPER	2	2	2	40
	53307050	MOUNT,MG SLIDER	2	2	2	40
	53307060	MOUNT,SLIDE GUIDE	2	2	2	40
	53307070	ACTUATOR PLATE,MAGNET	2	2	2	42
	53307080	CAM STOPPER	2	2	2	40

SP	Part. No.	Description	Quantity			Fig. No.
			230V	240V	120V	
	53307090	RETAINER,CASTER	1	1	1	39
	53310010	ZAN HARNESS ASSY	1	1	1	39
	53310020	SLIDER MG	2	2	2	40
◉	53310030	RUBBER,SIDE STOPPER	2	2	2	40
	53310040	ADJUSTER BOLT	4	4	4	39
	53310060	CL3 HARNESS ASS'Y	1	1	1	41
	53310070	BRAKET,GEARBOX	1	1	1	42
	53310100	GROUND PLATE,CASSETTE	2	2	2	40
	53310140	FOOT	1	1	1	40
	53310160	PULLEY S3M-16	1	1	1	42
	53310180	FRONT SIDE LIFTER	2	2	2	40
	53310200	PULLEY S3M-18-WF	1	1	1	41
	53310220	SIDE LIFTER SHEET	8	8	8	40
	53310230	STUD-PAPER FEED DRIVE	1	1	1	42
	53310280	FILM	1	1	1	39
◉	53310300	PICK-UP ROLLER	3	3	3	41
	53310320	PAPR REAR GUIDE ASS'Y	2	2	2	40
	53310350	EDGING 465	1	1	1	39
	53310380	SPACER	1	1	1	42
	53310390	HEATER HARNESS	1	1	1	43
	53310400	EARTH PLATE 1	1	1	1	39
	53310410	EARTH PLATE 2	1	1	1	39
	53310430	SHAFT-PICK UP ARM C	1	1	1	41
◉	53310440	BELTS3M078050	2	2	2	41
◉	53310450	BELTS3M048050	1	1	1	41
◉	53310460	SEPARATION ROLLER 25E	2	2	2	42
	53310470	SP-SEPARATION 68	1	1	1	42
	53310480	PRESSING FILM	1	1	1	42
	53310490	FILM,CASSETTE	2	2	2	40
	53310500	PIN(M6X40)	1	1	1	39
	53310510	ASS'Y BKT-H-MOT-K	1	1	1	39
	53310520	ASS'Y POSITIONING PIN	2	2	2	39
	53310530	I/F HARNESS ASS'Y 68A(EXP)	1	1	1	39
◉	53310540	ROM ASS'Y	1	1	1	39
◉	54104020	LEFT COVER	1	1	1	39
◉	54104030	RIGHT COVER	1	1	1	39
◉	54104050	COVER,CONVEYING RELEASE	1	1	1	42
◉	54104060	HANDLE,CONVEYING RELEASE	1	1	1	42
	54104070	GUIDE,PAPER FEED	1	1	1	42
	54104080	ADJUSTING PLATE,CASSETTE	1	1	1	40

• Parts with "◉" indicates the Service parts.

SP	Part. No.	Description	Quantity			Fig. No.
			230V	240V	120V	
◉	54106010	RUBBER	1	1	1	40
	54106020	LIFT PULLEY	2	2	2	40
	54106031	SIDE LIFTER R	2	2	2	40
	54106040	MAIN LIFTER	2	2	2	40
	54106050	GUIDE RACK LIFTER	8	8	8	40
	54106070	GEAR 0.8-35-1-20	1	1	1	42
	54106080	CONVEYING BASE	1	1	1	41
	54106090	PICK ARM	3	3	3	41
	54106100	PULLEY-20 GEAR 0.8-32	7	7	7	41
	54106110	GEAR 0.8-26	2	2	2	42
	54106120	PICK ARM LINK	1	1	1	41
	54106130	LINK ARM	2	2	2	41,42
	54106140	LINK PUSHER	1	1	1	41
	54106150	TORQUE LIMITER DRUM	1	1	1	42
	54106160	TORQUE LIMITER ARBOR	1	1	1	42
	54106170	TORQUE LIMITER COVER	1	1	1	42
	54106190	GEAR-0.8-50-20	1	1	1	42
	54106200	GEAR-0.8-20	5	5	5	41,42
	54106220	GUIDE PULLEY	4	4	4	40
	54106230	GEAR-0.8-16	1	1	1	41
	54106250	P2M43-G20	1	1	1	39
	54106260	STUD PLATE	2	2	2	42
	54106271	CASSETTE	1	1	1	40
	54106280	PULLEY-S3M-18-OW	2	2	2	41
	54106290	LIFTER DRIVE BKT1	2	2	2	40
	54106300	LIFTER DRIVE BKT2	2	2	2	40
	54106310	GUIDE,PAPER SIDE	2	2	2	40
	54106340	BKT-SENSOR	3	3	3	41
◉	54106390	PLATE-R MOTOR SENSOR	2	2	2	39
	54106410	FRONT CONVEYING FRAME	1	1	1	42
	54106420	PAPER GUIDE-U	1	1	1	42
	54106430	PAPER GUIDE-D	1	1	1	42
	54106440	REAR CONVEYING FRAME	1	1	1	42
	54106470	BKT-SLIDER-R	1	1	1	39
	54106500	SLIDER PLATE	2	2	2	39
	54106510	LEFT SIDE PLATE	1	1	1	39
	54106530	BKT-REAR SUPPORT	1	1	1	39
	54106550	SPRING PLATE CONVEYING BASE GROUND	1	1	1	42
	54106570	REAR GUIDE BASE PLATE	2	2	2	40
	54106580	CAM SHAFT	2	2	2	40

SP	Part. No.	Description	Quantity			Fig. No.
			230V	240V	120V	
	54106590	SHAFT,DRIVE FULCLUM	2	2	2	40
	54106600	SHAFT-SUB LIFT	2	2	2	40
	54106610	SHAFT-MAIN LIFT	2	2	2	40
	54106620	SHAFT-GEAR-26-16	1	1	1	42
	54106630	SHAFT-NORMAL ROTATION	1	1	1	42
	54106640	SHAFT-TURN OVER	1	1	1	42
	54106660	SHAFT-SEPARATION DRIVE	1	1	1	42
	54106670	SHAFT-PICK UP ARM B	1	1	1	41
	54106680	SHAFT-PICK UP ARM A	1	1	1	41
	54106690	SHAFT-PICK ROLLER	3	3	3	41
	54106700	SHAFT-TWIN GEAR	2	2	2	39
	54106720	STUD-LINK ARM	1	1	1	42
	54106730	SHAFT-PICK PULLEY	2	2	2	40
	54106740	PARALLEL KEY 3X3X10	2	2	2	40
◉	54106750	BELT-S2M-180-6	1	1	1	39
	54106760	SP-PICK ARM LINK	1	1	1	41
	54106780	SP-ADJUSTMENT LINK	1	1	1	42
	54106790	SP-TORQUE LIMITER	1	1	1	42
	54106800	CASTER	4	4	4	39
	54106840	SP-SIZE	8	8	8	40
	54106870	ONE-WAY DRUM	4	4	4	41,42
	54106890	SP-PICK B	3	3	3	41
	54106910	MAGNET DOOR	2	2	2	42
◉	54106930	RIGHT LIFT BELT ASS'Y	1	1	1	40
◉	54106940	LEFT LIFT BELT ASS'Y	1	1	1	40
	54106950	AIR DAMPER	2	2	2	40
	54106960	UPPER LIMIT LABEL	2	2	2	40
	54107110	PULLEY-S2M-18	1	1	1	39
	54107130	DAMPER SUPPORT	2	2	2	40
	54107140	PLT-TAP	2	2	2	39
	54107150	SP-H-MOT	1	1	1	39
◉	54107170	BLT-B60-S3M-258	1	1	1	41
	54107330	DAMPER MAT	2	2	2	40
	54107340	BKT-B FULCRUM	1	1	1	42
	54107350	FILM	1	1	1	42
	54107360	B-ADJUSTER SP	1	1	1	42
	54107370	SFT-B FULCRUM	1	1	1	42
	54107380	BRIDGE FILM	2	2	2	40
	54107400	JAM-COVER FILM	4	4	4	42
	54107410	BASE HEATER	2	2	2	43

• Parts with "◉" indicates the Service parts.

SP	Part. No.	Description	Quantity 230V	240V	120V	Fig. No.
	54107430	PLT MG CATCH	1	1	1	40
◉	54126000	SENSOR51	4	4	4	41,42
	54126010	E MOTOR HARNESS ASS'Y	1	1	1	39
	54126020	H MOTOR HARNESS ASS'Y	1	1	1	39
	54126030	LS HARNESS ASS'Y	1	1	1	41
	54126040	PPS1 HARNESS ASS'Y	1	1	1	41
	54126050	PPS0 HARNESS ASS'Y	1	1	1	42
	54126060	DOOR HARNESS ASS'Y	1	1	1	41
	54126070	JUNCTION HARNESS ASS'Y	1	1	1	41
	54126100	CLUTCH-BJ-2.6-NO.1	1	1	1	42
◉	54126110	CLUTCH-BJ-2.6-NO.2	2	2	2	41
◉	54126120	PAPER CONVEYING MOTOR	1	1	1	39
	54126150	RSW HARNESS ASS'Y	1	1	1	42
◉	54126170	PI SENSOR	9	9	9	39,39,41,42
◉	54126180	SAFETY SWITCH	1	1	1	41
◉	54128010	MAIN PCB SUB ASS'Y	1	1	1	39
◉	54128030	JUNCTION PCB ASS'Y	1	1	1	41
	59606770	CLIP-5	5	5	5	41,42
◉	60606101	BUSHING FEED BACK ROLLER	4	4	4	5,35
	60804120	MAGNET CATCH	5	5	5	1,1,17
	60907170	CUSHION,CASSETTE R	4	4	4	3,3
◉	60907880	BUSHING,BYPASS SHAFT	5	5	5	4,8
◉	60907910	PAD,BYPASS	1	1	1	6
◉	60912270	BEARING,688ZZ	12	12	12	18,19,20
◉	60922220	LOWER BELT,PAPER FEED	1	1	1	18
◉	61522040	DRIVE GEAR,FIXING SECTION	2	2	2	5,23
◉	61705110	LABEL,PAPER UPPER LIMIT	2	2	2	3,3
◉	61706770	UPPER PULLEY,BYPASS	3	3	3	4,6
◉	61714140	GEAR,DEVELOPING SLEEVE	1	1	1	8
	61716110	SPRING,CLEANING DRIVE TENSION	1	1	1	2
◉	61722070	GEAR A,DUPLEX IDLE	1	1	1	20
	61727540	INTERLOCK SWITCH B	3	3	3	27,28,28
◉	62207180	BELT,LEADING EDGE	1	1	1	22
◉	62218011	SEPARATION CLAW	4	4	4	16
◉	62218020	RATCHET,SEPARATION	8	8	8	16
	62218040	SHAFT,SEPARATION CLAW	4	4	4	16
	63202120	SUPPORT PLATE,COVER	2	2	2	31
◉	63212210	STATIC ELIMINATOR,EJECT	1	1	1	34
	63213360	SPRING,PAPER EJECT HOLDER	1	1	1	22
	63312120	SPRING,HOOK HAND UNIT	1	1	1	6

SP	Part. No.	Description	Quantity 230V	240V	120V	Fig. No.
◉	63506130	SPRING,PAPER FEED	1	1	1	6
	63511220	STOP RING,4	8	8	8	4,4,6,8,22
	63511541	PIN,ADF	1	1	1	36
◉	63516110	SPRING,TRANSFER	2	2	2	7
	63526080	SPRING,SAFETY SWITCH LEVER	2	2	2	35
◉	63527240	PI,GP1A71A	1	1	1	36
	63801050	INLET WIRING ASS'Y	1	1	0	28
◉	63806290	BUSHING,6	3	3	3	4,36
◉	63814100	IDLE GEAR 15,AGITATION	1	1	1	37
	63814260	SPRING,DEV. SHUTTER	1	1	1	36
	63827080	FERRITE CORE	3	3	0	28
	65004171	HOLDER,SAFETY SWITCH	2	2	2	1,1
◉	65011310	GEAR 20,IDLE	1	1	1	37
◉	65011360	BUSHING 6,LOOP	1	1	1	34
	65027470	CORE,7-15X18	3	3	3	38
	6550101C	MAIN PCB ASS'Y	1	1	1	44
	65504011	UPPER COVER	1	1	1	44
	65504022	LOWER COVER	1	1	1	44
	65504030	CAP,SWITCH	1	1	1	44
	65527010	SIGNAL WIRING	1	1	1	44
	65527029	IC, ROM MAIN PCB	1	1	1	44
◉	65722030	PULLEY 22,FEED	2	2	2	25
◉	65722250	PULLEY 20,EJECT	1	1	1	34
◉	65814400	FRONT BUSHING 15B,AGITATION	4	4	4	15
◉	65815060	IDLE GEAR 40,TONER SUPPLY	1	1	1	23
◉	65907210	GEAR 20,CASSETTE	1	1	1	33
◉	65907300	PULLEY,CASSETTE	1	1	1	37
◉	65914120	GEAR 18,IDLE DEVELOPING	3	3	3	3,3,7
	65973030	MAGNET,CARTRIDGE	2	2	2	23
	66006350	SWITCH,CASSETTE LIFT	6	6	6	4,6,23
◉	66006810	GEAR,16 BYPASS PULLEY	2	2	2	5,8
	66007120	SPRING,CURSOR C	4	4	4	3,3
	66007310	PIN,CASSETTE WORK PLATE	2	2	2	3,3
	66012300	SLIDER,SCANNER	8	8	8	10
◉	66015270	PULLEY 10,TONER RECYCLE	1	1	1	18
◉	66018180	GEAR 26,SPIRAL ROLLER	1	1	1	37
◉	66022131	GEAR 30,DEVELOPING DRIVE	1	1	1	17
◉	66022190	GEAR,21 DEVELOPING	2	2	2	4
	66060010	COVER,KEY COUNTER	1	1	1	45
	66060021	RETAINER,KEY COUNTER COVER	1	1	1	45

• Parts with "◉" indicates the Service parts.

SP	Part. No.	Description	Quantity 230V	240V	120V	Fig. No.
	66060030	RETAINER,KEY COUNTER	1	1	1	45
	66060040	MOUNT,KEY COUNTER	1	1	1	45
	66069781	SET PARTS ,KEY COUNTER	1	1	1	45
	66102140	BASE,RUBBER	3	3	3	2,39
◉	66106080	SPRING,PAD	0	0	2	3
◉	66107084	SLIDER,CASSETTE	6	6	6	2
◉	66107100	PAD,CASSETTE	2	2	2	3,3
	66127010	SWITCH,COVER OPEN	2	2	2	28,28
	66212080	MOUNT,SCANNER SWITCH	1	1	1	9
	66222180	SPRING,DRUM DRIVE	1	1	1	19
◉	66717230	GEAR,SIDE REGISTRATION	1	1	1	23
	67322180	GEAR 28,IDLE DRIVE	1	1	1	18
◉	67322230	BUSHING 8	26	26	26	4,5,6,22,23,25,26
◉	67421330	STATIC ELIMINATOR,DUPLEX UNIT	2	2	2	23
	67505110	LABEL,STOPPER	0	4	4	39
	67805200	LABEL,ROLL HEATER	1	1	0	45
◉	67822450	GEAR 20,IDLE	2	2	2	19,20
	68200070	CASSETTE ASS'Y U(K M)	0	0	2	3
	68200080	CASSETTE ASS'Y U2(K M)	2	2	0	3
	68202090	RETAINER,DESK	1	1	1	39
◉	68204052	COVER,CONNECTOR	1	1	1	39
◉	68204180	RIGHT HANDLE,FEED RELEASE(K M)	3	3	3	1,1,7
◉	68204190	UPPER COVER,CASSETTE(K M)	3	3	3	3,3,21
◉	68204200	LOWER COVER,CASSETTE(K M)	3	3	3	3,3,21
◉	68205100	LABEL,CASSETTE SIZE(METRIC K M)	3	3	0	3,21
◉	68205110	LABEL,CASSETTE SIZE(INCH K M)	0	0	3	3,21
◉	68322050	GEAR 36,FIXING DRIVE	2	2	2	19
	68427020	POWER SOURCE SWITCH	1	1	1	45
	68705040	RIGHT LABEL,MIDDLE TRAY RELEASE	1	1	1	23
	68707020	LOWER GUIDE,DUPLEX FEED	1	1	1	4
	68707050	RIGHT MOUNT,RAIL	2	2	2	2
	68720120	LEVER B,FEED SHIFT SOLENOID	1	1	1	25
◉	68720160	PULLEY,FEED SHIFT	4	4	4	25
	68720170	MOUNT,FEED SHIFT PULLEY	4	4	4	25
◉	68721030	PULLEY,TURN OVER	1	1	1	23
◉	68721080	LOWER ROLLER,DUPLEX REGISTRATION	1	1	1	24
	68721180	UPPER GUIDE,DUPLEX CONVEYING	1	1	1	23
	68721210	RETAINER,DUPLEX REGISTRATION	1	1	1	24
	68721220	PRESSING PLATE,DUPLEX REGISTRATION	2	2	2	24
	68721340	INNER SUPPORT PLATE,DUPLEX UNIT	1	1	1	23
	68721350	FRONT GUIDE,SIDE REGISTRATION	1	1	1	23
	68721360	REAR GUIDE,SIDE REGISTRATION	1	1	1	23
◉	68721370	RACK,SIDE REGISTRATION	2	2	2	23
	68721380	MOUNT,SIDE REGISTRATION DRIVE	1	1	1	23
	68721390	MOUNT,SIDE REGISTRATION MOTOR	1	1	1	23
◉	68721420	PULLEY,LEADING REGISTRATION	1	1	1	22
	68721450	LEVER,LEADING REGISTRATION	1	1	1	22
	68721460	SPRING,LEADING REGISTRATION SOLENO	1	1	1	22
	68721500	LEVER,TRAILING EDGE TAPPING	1	1	1	22
	68721571	TENSION PLATE,DUPLEX CONVEYING	1	1	1	22
◉	68721600	GEAR,DUPLEX JOINT	1	1	1	23
◉	68721630	PULLEY 40,DUPLEX CONVEYING	1	1	1	22
◉	68721640	PULLEY 20,DUPLEX CONVEYING	2	2	2	22
◉	68721660	BELT 600,DUPLEX CONVEYING	1	1	1	22
◉	68721690	COVER,DUPLEX UNIT	1	1	1	21
	68721720	STOPPER,TRAILING EDGE TAPPING	4	4	4	22,26
	68721730	STOPPER,LEADING FEED SOLENOID	1	1	1	22
	68721740	PIN,DUPLEX CONVEYING FULCRUM	2	2	2	24
◉	68721750	ROLLER B,DUPLEX CONVEYING	1	1	1	22
	68721760	SPRING,TRAILING EDGE TAPPING	1	1	1	22
	68721770	RIGHT GUIDE,MIDDLE TRAY	1	1	1	23
	68721780	RETAINING PIN,CONVEYING	2	2	2	24
	68721790	LOWER STOPPER,DUPLEX CONVEYING	1	1	1	25
	68721800	MOUNT,LEADING REGISTRATION SOLENOI	1	1	1	22
	68721821	FRONT GUIDE,SIDE REGISTRATION COVE	1	1	1	23
	68721831	REAR GUIDE,SIDE REGISTRATION COVER	1	1	1	23
	68721840	GROUND PLATE,DUPLEX	1	1	1	24
	68727030	SWITCH,DUPLEX CONVEYING	4	4	4	23,25,26
◉	68727080	SOLENOID,TRAILING EDGE TAPPING	1	1	1	22
	68727100	SOLENOID,LEADING REGISTRATION	1	1	1	22
◉	68727110	SWITCH,DUPLEX EJECT	2	2	2	23,24
	69027070	SWITCH,MAIN	1	1	1	27
◉	69322010	BELT,EJECT DRIVE	1	1	1	20
	71602201	SPACER,SHIFT LEVER	2	2	2	37
	71802210	PIN,DRUM LIFT	1	1	1	2
	71804400	MAGNET CATCHER	1	1	1	1
◉	71807200	GEAR 20,REFEED PULLEY	1	1	1	20
◉	71814100	BUSHING 6-21,MAIN UNIT	1	1	1	14
◉	71814130	BUSHING 6-23,MAIN UNIT	1	1	1	14
◉	71814180	GEAR 35,MAIN UNIT MIXING	1	1	1	15

• Parts with "◉" indicates the Service parts.

SP	Part. No.	Description	Quantity 230V	240V	120V	Fig. No.
◉	71815110	IDLE GEAR 18,SUB UNIT	4	4	4	4,6,7
	71821600	SPRING,UPPER EJECT ROLLER	2	2	2	25
◉	72107160	BUSHING 6,LOWER REGISTRATION ROLLE	10	10	10	6,8,22,25,34,35
◉	72107760	BUSHING 6,REGISTRATION ROLLER	4	4	4	22,25
	72112520	TENSION SPRING,SCANNER WIRE	2	2	2	10
◉	72118141	SPRING,CLEANING BLADE	1	1	1	31
	72127100	PI SWITCH,OPTICAL SECTION	1	1	1	9
◉	72407330	PULLEY,PF GEAR 30	1	1	1	18
	72418480	SPRING, SPIRAL ROLLER	2	2	2	36
	72420200	STATIC BRUSH	1	1	1	17
	72518060	PIN B,DISPOSAL TANK FULCRUM	1	1	1	6
	72518120	PIN,TANK RELEASE	1	1	1	12
◉	72622050	GEAR 25,FEED LOOP	1	1	1	5
◉	72622130	UPPER PULLEY,CENTRAL LEAD ROLLER	3	3	3	18
	72907110	SPRING,PAPER GUIDE PULLEY	4	4	4	26
	72919100	SEAL,RECYCLE SECTION	2	2	2	15
◉	72920280	GEAR 16,EJECT	1	1	1	15
◉	73210350	TIMING PULLEY 27,LOOP	1	1	1	22
◉	73210370	GEAR 18,LOOP	2	2	2	22
◉	73210450	BUSH, 6	18	18	18	4,15,16,22,34, 34,36
	73226040	SPRING,REVERSE SOLENOID	1	1	1	25
	73818100	SPRING, BLADE THRUST	1	1	1	34
	73905191	LABEL,SUPPLY(E,F,S)	0	0	2	1,1
	73905200	LABEL,SUPPLY(E,F,G,S)	0	2	0	1,1
	74306520	JOINT,PULLEY DRIVE SHAFT	2	2	2	6,34
	74315200	PIN,TONER HOPPER	1	1	1	16
◉	74322350	PULLEY,DRIVE TENSION	2	2	2	18,20
	74327180	PIN,CONNECTOR	8	8	8	28,28
◉	74669000	TUNGSTEN WIRE(OX) S•P (50M)	1	1	1	12
◉	74718091	BUSHING CLEANING UNIT	3	3	3	8,18
◉	74722290	SPRING DRUM DRIVE COUPLER	1	1	1	20
	75704280	STRAP FRONT COVER	1	1	1	1
	75706040	STOPRING PAPER FEED PULLEY	3	3	3	6,23
	75712080	MIRROR HOLDER	4	4	4	10
	75714210	COLLAR DEVELOPING UNIT	2	2	2	36,37
◉	75720151	EJECT PULLEY	4	4	4	26
◉	75722252	IDLE PULLEY 15	1	1	1	22
	75727021	NOISE FILTER(200)	1	1	0	28
◉	75817010	STATIC BRUSH FRONT TRANSFER	2	2	2	4

SP	Part. No.	Description	Quantity 230V	240V	120V	Fig. No.
◉	75915090	BUSHING AGITATION ROTOR SHAFT	4	4	4	14
◉	76007150	SPRING PAPER PAD PULLEY	2	2	2	22
◉	76221040	GEAR 28 FD	1	1	1	37
◉	76507110	COLLAR ORIGINAL FEEDBACK ROLLER	2	2	2	8
	76610320	PIN TENSION PULLEY	4	4	4	9
	76727010	ORIGINAL SIZE SWITCH	1	1	1	7
	76727300	MODULAR CORD B	1	1	1	44
	77502090	LID FINISHER CABLE	1	1	1	28,28
◉	77616110	PAD TC CLEANING	2	2	2	12
	77706461	PRESSING SPRING	6	6	6	5,8,35
	78112040	SPRING CIS	4	4	4	24
◉	78507090	SPRING,PF LOOP PAD	2	2	2	2,18
	78620710	CLAW STOPPER	1	1	1	17
	78706241	FILTER CF SENSOR	1	1	1	33
	78707580	FELT ORIGINAL FEED	2	2	2	34
◉	78722151	PULLEY 20	2	2	2	37
	78727110	JAM DETECTION SWITCH	1	1	1	33
	78826100	MOUNT SIGNAL CABLE	1	1	1	44
	82142540	KEY COUNTER	1	1	1	45
	B1304060	BINDING SCREW BVM4X6 (BLACK)	13	13	13	43,43,45
	B2303060	COUNTER-SUNK HEAD SCREW BFHM3X6 (B	2	2	2	45
	B3003200	TAPPING SCREW M3X20(B-TYP)	1	1	1	44
	B3323160	BINDING TAP TIGHT SCREW M3X16(BRON	1	1	1	44
	B3324080	BINDING TAP TIGHT SCREW M4X8(BLACK	2	2	2	45
	B4104060	TRIPLE SCREW M4X6(CHROMIUM)	1	1	1	45
	B4304060	TRIPLE SCREW M4X6 (BLACK)	4	4	4	45
	B4304100	TRIPLE SCREW M4X10 (BLACK)	2	2	2	45
	C2303000	NUT BNM3 (BLACK)	1	1	1	45
	D2002600	STOP RING S-26	2	2	2	17
◉	G3006880	BEARING #688ZZ	1	1	1	14
	J0040900	SOCKET,MINI MATENLOCK,170366-1	1	1	1	13
	J0070010	POSITIVE CONNECTOR,#187,172074-1	1	1	1	13
	J0070030	POSITIVE CONNECTOR HOUSING 3P,#187	2	2	2	38
	J0070900	POSITIVE CONTACTOR,#187,170330-1	7	7	7	13,38
	J0140030	RECEPTACLE,173977-3(AMP)	5	5	5	38
	J0140060	RECEPTACLE MT 6P,173977-6	2	2	2	38
	J0140130	RECEPTACLE,1-173977-3(AMP)	2	2	2	38
	J0140150	RECEPTACLE,1-173977-5(AMP)	2	2	2	38
	J0141030	RECEPTACLE,2-173977-3(AMP)	1	1	1	38
	J0141060	RECEPTACLE,2-173977-6(AMP)	1	1	1	38

• Parts with "◉" indicates the Service parts.

SP	Part. No.	Description	Quantity 230V	Quantity 240V	Quantity 120V	Fig. No.
	J0143030	CASE,2-175694-3(AMP)	1	1	1	38
	J0143060	CASE,2-175694-6(AMP)	1	1	1	38
	J0144020	CASE,175694-2(AMP)	3	3	3	38
	J0144030	CASE,175694-3(AMP)	6	6	6	38,38
	J0144060	CASE,175694-6(AMP)	2	2	2	38
	J0145030	RECEPTACLE,6-173977-3(AMP)	1	1	1	38
	J0149260	CASE,2-175133-6(AMP)	1	1	1	38
	J0149300	CASE,3-175133-0(AMP)	1	1	1	38
	J0150030	RECEPTACLE,175778-3(AMP)	2	2	2	13
	J0150900	CONTACTOR,175161-1(AMP)	6	6	6	13
	J0153030	RECEPTACLE,179228-3(AMP)	1	1	1	24
	J0153900	CONTACTOR,179518-1(AMP)	1	1	1	24
	J0170010	PLUG,172335-1(AMP)	1	1	1	13
	J0220040	PLUG EL 4P,ELP-04V	1	1	1	45
	J0241020	PLUG SM 2P,SMP-02V-BC	2	2	2	13,24
	J0241030	PLUG SM 3P,SMP-03V-BC	2	2	2	13,24
	J0250900	SOCKET,BHF-001T-0.8SS	2	2	2	24
	J0250910	SOCKET NH,BHF-001T-0.8BS	4	4	4	13
	J0300900	SOCKET,5194TL	4	4	4	38
	J0301040	RECEPTACLE 4P,5196-04	1	1	1	38
	J0325160	CASE,54111-1615(MOLEX)	1	1	1	28,28
	J0388460	RECEPTACLE,52918-4615(MOLEX)	1	1	1	27
	J0410920	CONTACT,QR/P1-PC2A-111	24	24	24	13,13
	J0413240	PLUG 24P,QR/P4-24P-C	1	1	1	13
	J0421900	CONTACTOR,DF1B-2428SC(HIROSE)	4	4	4	13
	J0424040	RECEPTACLE,DFIB-4S-2.5R(HIROSE)	1	1	1	13
	J0440220	W-LOW SOCKET 22P,DF11-22DS-2C	1	1	1	24
	J0441180	RECEPTACLE,DF11-18DS-2C(HIROSE)	1	1	1	24
	J0441900	CONTACTOR,DF11-2428SC	2	2	2	24
	J0450030	PLUG,DF3-3S-2C(HIROSE)	4	4	4	24
	J0450060	PLUG,DF3-6S-2C(HIROSE)	1	1	1	24
	J0450900	SOCKET,DF3-2428SC(HIROSE)	6	6	6	24
	J0451030	PLUG,DF3-3S-2C(18)(HIROSE)	1	1	1	24
	J0452040	RECEPTACLE,DF3AA-4EP-2C(HIROSE)	1	1	1	13
	J0452900	PIN,DF3-EP2428PC(HIROSE)	8	8	8	13
	J0453020	PLUG,DF3-2EP-2C(HIROSE)	1	1	1	13
	J0453030	PLUG,DF3-3EP-2C(HIROSE)	1	1	1	13
	J0463080	PLUG,QR/P15-8S-C(HIROSE)	0	0	2	3
	J0463400	PLUG,QR/P15-40S(HIROSE)	1	1	1	24
	J0464080	RECEPTACLE,QR/P15-8S-C(02)(HIROSE)	2	2	2	28,28

SP	Part. No.	Description	Quantity 230V	Quantity 240V	Quantity 120V	Fig. No.
	J0464400	RECEPTACLE,QR/15-40P(02)(HIROSE)	1	1	1	28,28
	L0223040	ROUND TYPE TERMINAL,SRA-21T-4,(REE	1	1	1	13
	L4040000	CLOSE TYPE TERMINAL,0.5-1.75,CE-1	1	1	1	13
	M0207000	BINDING BAND,KB-100-1	14	14	14	14,36,38
	M1203200	OPEN BUSHING,OCB-375	3	3	3	32
	M1203230	OPEN BUSHING,OCB-750	1	1	1	39
	M1203490	STRAIN RELEAF BUSHING,SR-7K-2	1	1	2	28,44
	M1203510	OPEN BUSHING,OCB-1000	2	2	2	9
	M1203600	BUSHING,SB-1500-21(HEYCO)	1	1	1	28,28
	M1203610	BUSHING,SB-1187-15(HEYCO)	2	2	2	27,28,28
	M2104200	EDGING EDS-1	4	4	4	17,32
	M2104210	EDGING,EDS-2	13	13	13	9,17,24,28,28,43
	M2104250	EDGING,EDS-17L(KITAGAWA)	10	10	10	9,24,27,28,28
	M2104260	EDGING,EDS-0607U(KITAGAWA)	20	20	20	6,15,18,19,22,23, 25,27,28,28,39
	M2104280	EDGING,EDS-25L(KITAGAWA)	1	1	1	28,28
	M2104350	EDGING,EDS-0607M(KITAGAWA)	2	2	2	34
	M2105000	NYLON CLAMP 2N,NK-2N	1	1	1	33
	M2105040	NYLON CLAMP 6N,NK-6N	2	2	2	38,42
	M2105710	MINIATURE CLAMP,UAMS-05-0	5	5	5	8,15
	M2105720	MINIATURE CLAMP,UAMS-05-2	16	16	16	6,7,8,17
	M2105730	MINIATURE CLAMP,UAMS-07-0	4	4	6	5,9,28,28
	M2105740	MINIATURE CLAMP,UAMS-05S-2	5	5	5	25
	M2107120	BINDING BAND SG-130	19	19	19	5,6,17,18,25,26, 28,28,34,45
	M2107200	BAND,SG-110 V0(KITAGAWA)	14	14	14	41,42,43
	M2108120	SPACER,KGLS-4S	5	5	5	18,28,28
	M2108140	SPACER,KGLS-6S	4	4	4	39
	M2108190	SPACER,KGLS-10S	2	2	2	28,28
	M2108490	SPACER,KGLS-12RT	2	2	2	9
	M2108850	SPACER,KGPS-8RF(KITAGAWA)	3	3	3	28,28
	M2108880	SPACER,KGPS-5RF(KITAGAWA)	1	1	1	27
	M2108900	SPACER,KGPS-16S(KITAGAWA)	2	2	2	38
	M2108920	SPACER,KGLS-5RT(KITAGAWA)	2	2	2	27
	M2108930	SPACER,KGLS-8RT(KITAGAWA)	2	2	2	28,28
	M2109000	WIRE SADDLE,WS-1NS	5	5	5	39
	M2109010	WIRE SADDLE,WS-2NS	5	5	5	9,20,28,28
	M2109030	WIRE SADDLE,WS-3NS	2	2	2	19
	M2109060	LOCKING WIRE SADDLE,LWS-2NS	4	4	4	13
	M2109180	WIRE SADDLE,LWS-1S	2	2	2	24

• Parts with "◉" indicates the Service parts.

SP	Part. No.	Description	Quantity			Fig. No.
			230V	240V	120V	
	M2109230	WIRE SADDLE,LWS-3S(KITAGAWA)	1	1	1	32
	M2109260	WIRE SADDLE,YMC-05-H-0(KITAGAWA)	12	12	12	32,34,35,36,37
	M2109270	WIRE SADDLE,LWS-5S-2W(KITAGAWA)	4	4	4	28,28
	M2109300	WIRE SADDLE,LWS-8SL-2.5W(KITAGAWA)	11	11	11	18,28,28
	M2109330	WIRE SADDLE,YMC-10-0(KITAGAWA)	1	1	1	34
	M2114010	NYLON RIVET,NRP-345(KITAGAWA)	1	1	1	15
	M2307010	BINDING BAND,T18R	7	7	7	5,6
	M2505170	CLAMP,GNK-2N(NIKKO)	2	2	0	9
	M2607010	BINDING BAND,PLT1M	9	9	9	24
	M7107000	BAND,GT-100M(HUA WEI)	6	6	6	13
	NAS09020	BACKUP RAM,M48T35Y-70PC1	1	1	1	28,28

• Parts with "◉" indicates the Service parts.

CLASSIFICATION OF THE SCREWS IN ILLUSTRATION

REF.	ITEM #	DESCRIPTION
AAU	B0004120	ROUND HEAD SCREW M4X12
ABH	B0304300	ROUND HEAD SCREW M4X30 (BLACK)
ADF	B4093060	PEDESTALHEAD TAP-TITE SCREW(CHROMATING)M3X06
AFL	B0703050	ROUND HEAD SCREW M3X5 (STAINLESS)
AVE	B0024080	ROUND HEAD SCREW WITH SW.W M4X8
AVS	B0023100	ROUND HEAD SCREW WITH SW.W M3X10
AXC	B0004300	ROUND HEAD SCREW M4X30
AZC	B0024160	ROUND HEAD SCREW WITH SW.W M4X16
BAA	B1003040	BINDING SCREW,CVM3X4
BAB	B1003060	BINDING SCREW CVM3X6
BAC	B1003080	BINDING SCREW M3X8
BAL	B1003050	BINDING SCREW CVM3X5
BAN	B1004060	BINDING SCREW CVM4X6
BAO	B1004100	BINDING SCREW CVM4X10
BAX	B1004040	BINDING SCREW CVM4X4
BBB	B1303050	BINDING SCREW BVM3X5 (BLACK)
BBE	B1304060	BINDING SCREW BVM4X6 (BLACK)
BBG	B1304100	BINDING SCREW BVM4X10 (BLACK)
BBU	B1303140	BINDING SCREW BVM3X14 (BLACK)
BCE	B1104060	BINDING SCREW VM4X6 (CR)
BCF	B1104080	BINDING SCREW VM4X8 (CR)
BCK	B1103050	BINDING SCREW CV3X5
BED	B1603100	BINDING SCREW M3X10 (BRASS,NI)
BEF	B1604060	BINDING SCREW M4X6 (BRASS,NI)
BFB	B1703100	BINDING SCREW M3X8 (STAINLESS)
BGB	B1244080	BINDING SCREW WITH LOCK TVM4X8
BHA	B3023060	BINDING TAP TIGHT SCREW M3X6
BHC	B3024060	BINDING TAP-TIGHT SCREW M4X6
BHD	B3024080	BINDING TAP-TIGHT SCREW M4X8
BHF	B3314080	BINDING TAP-TITE P SCREW M4X08
BHI	B3313080	BINDING TAP-TITE SCREW M3X08
BHN	B8013080	BINDING TAP-TIGHT SCREW M3X08
BHV	B3313060	+BINDING TAP-TIGHT P BRONZE SCREW M3X06
BHY	B8113080	BINDING TAP-TITE P SCREW M3X8
BMD	B1002060	BINDING SCREW M2X06(CHROMATING)
BNA	B1044080	BINDING SCREW WITH LOCK M4X8
BVD	B1304400	BINDING SCREW BVM4X40 (BLACK)
BVV	B1324080	BINDING SCREW WITH SW (BLACK) M4X8
DJB	B5003040	HEX. SOCKET HEAD SCREW HHM3X4
DJG	B5004060	HEX. SOCKET HEAD SCREW HHM4X6
EDB	B9094060	SPECIAL TRUSS HEAD SCREW M4X06
E03	D1000300	STOP RING (E-3)
E04	D1000400	STOP RING (E-4)
E05	D1000500	STOP RING (E-5)
E06	D1000600	STOP RING (E-6)
E07	D1000700	STOP RING (E-7)
E09	D1000900	STOP RING (E-9)
E1E	D1000150	STOP RING E-1.5
E2E	D1000250	STOP RING (E-2.5)
GEF	B9604060	GROUNDING SCREW M4X6 (BRASS,N;)
HAC	B4002050	TRIPLE TAPPING SCREW M2X5
HAD	B4003050	TRIPLE SCREW M3X05
HAF	B4004080	TRIPLE TAPPING SCREW M4X8
HAG	B4000080	TRIPLE SCREW M3X8
HAI	B4004060	TRIPLE SCREW M4X06(BLACK)
HAO	B4043080	TRIPLE TAP-TITE P SCREW M3X08
HAS	B4014080	TRIPLE SCREW M4X08
HAT	B4144080	+TP TAP-TITE P SCREW(CHROMIUM)
HAU	B4043080	TRIPLE TAP-TITE P SCREW M3X08
HAV	B4044080	+TP TAP TIGHT P CHROMATE M4X08
HAX	B4043050	TRIPLE TAP-TITE P SCREW M3X05
HBA	B4303050	TRIPLE SCREW M3X5 (BLACK)
HBC	B4304060	TRIPLE SCREW M4X6 (BLACK)
HBH	B4303060	TRIPLE SCREW M3X6 (BLACK)
HBO	B4304080	TRIPLE SCREW M4X8(BLACK)
HCA	B4104060	TRIPLE SCREW M4X6(CHROMIUM)
HCG	B4104120	TRIPLE SCREW M4X12(CHROMIUM)
HDA	B4343060	TRIPLE TAP-TITE P SCREW M3X06(BLACK)
HDC	B4344080	TRIPLE TAP-TITE P SCREW M4X08(BLACK)
KAK	E0020080	SPRING PIN 2X8
KAL	E0020100	SPRING PIN 2X10
KAM	E0020120	SPRING PIN 2X12
KAN	E0020140	SPRING PIN 2X14
KAO	E0020160	SPRING PIN 2X16
KAX	E0030140	SPRING PIN 3X14
KFB	E5120120	SPRING PIN H7A 2X12 SUS
KFO	E5120100	SPRING PIN H7A 2X10 SUS
KKH	E0120200	SPRING PIN 2X20(SUS)
NBB	C1304000	NUT NSM4
RDD	D4000400	STOP RING CSTW-4
RDE	D4000500	STOP RING CSTW-5
RDF	D4000600	STOP RING CSTW-6
WAE	C2006130	PLAIN WASHER PWM6
WAM	C2004080	PLAIN WASHER PWM4
WAO	C2003060	PLAIN WASHER PWM3
XCF	C2895130	SHIM 8.2-0.5T
XCH	C2896120	SHIM 10.2-0.5T
XEC	C2895950	SHIM 6.2-1.0T

KYOCERA MITA EUROPE B.V.
Hoeksteen 40, 2132 MS Hoofddorp,
The Netherlands
Phone: (020) 6540000
Home page: http://www.kyoceramita-europe.com
Email: info@kyoceramita-europe.com

KYOCERA MITA NEDERLAND B.V.
Gyroscoopweg 122, 1042 AZ Amsterdam,
The Netherlands
Phone: (020) 5877200

KYOCERA MITA (U.K.) LTD.
Mita House, Hamm Moor Lane,
Addlestone, Weybridge,
Surrey KT15 2SB, U.K.
Phone: (01932) 858266

KYOCERA MITA ITALIA S.P.A.
Via Marconi 8, 20041 Agrate Brianza,
Milano, Italy
Phone: (039) 65641

S.A. KYOCERA MITA BELGIUM N.V.
Hermesstraat 8A 1930 Zaventem, Belgium
Phone: (02) 7209270

KYOCERA MITA FRANCE S.A.R.L.
1 Rue Pelloutier,
77183 Croissy Beaubourg, France
Phone: (1) 60175152

KYOCERA MITA ESPAÑA S.A.
Edificio Mita, Avda. De Manacor Nº 2,
Urb. Parque Rozas, Apartado De Correos 76,
28230 Las Rozas, Madrid, Spain
Phone: 34-91-631-8392

KYOCERA MITA FINLAND OY
Kirvesmiehenkatu 4, 00810 Helsinki,
Finland
Phone: (09) 478 05200

KYOCERA MITA (SCHWEIZ) AG
Hölzliwisen Industriestrasse 28,
8604 Volketswil, Switzerland
Phone: (01) 9461600

KYOCERA MITA DEUTSCHLAND GMBH
Industriestrasse 17, D-61449 Steinbach/TS,
Germany
Phone: (06171) 7005-0

KYOCERA MITA GMBH AUSTRIA
Eduard Kittenberger Gasse 95
A-1230 Wien, Austria
Phone: (01) 86338 210

KYOCERA MITA SVENSKA AB
Siktgatan 2
162 26 Vällingby, Sweden
Phone: (08) 4719999

KYOCERA MITA DANMARK A/S
Industrivej 11, DK-4632 Bjæverskov,
Denmark
Phone: 53671100

KYOCERA MITA PORTUGAL LDA.
CASCAISTOCK-Armazem nº8,
Rua das Fisgas, Alcoitão,
2765 Estoril, Portugal
Phone: 1-4602221

KYOCERA MITA SOUTH AFRICA (PTY) LTD.
Unit 3, "KYALAMI CRESCENT",
KYALAMI BUSINESS PARK,
1685 Midrand, South Africa
Phone: (011) 4663290

KYOCERA MITA AMERICA, INC.
Headquarters:
225 Sand Road, P.O. Box 40008
Fairfield, New Jersey 07004-0008
U.S.A.
Phone: (973) 808-8444

KYOCERA MITA ASIA OCEANIA SALES DIVISION
2-28, 1-chome, Tamatsukuri, Chuo-ku,
Osaka 540-8585, Japan
Phone: (06) 6764-3668

KYOCERA MITA AUSTRALIA PTY.LTD.
P.O. Box 211,
Regents Park Estate Unit 2,
Block V 391 Park Road,
Regents Park N.S.W. 2143, Australia
Phone: 61-2-9645-5100

KYOCERA MITA NEW ZEALAND LTD.
5 Howe Street, Newton, Auckland 1,
P.O. Box 68343,
Auckland, New Zealand
Phone: (09) 377-2088

KYOCERA MITA (THAILAND) CORP., LTD.
9/209 Ratchada-Prachacheun Road,
Bang Sue, Bangkok 10800, Thailand
Phone: (02) 586-0333

KYOCERA MITA SINGAPORE PTE LTD.
121 Genting Lane, 3rd. Level,
Singapore 349572
Phone: 65-7418733

KYOCERA MITA HONG KONG LIMITED.
11/F., Mita Centre,
552-566 Castle Peak Road,
Tsuen Wan, New Territories,
Hong Kong
Phone: 852-2423-2163

KYOCERA MITA CORPORATION
2-28, 1-chome, Tamatsukuri, Chuo-ku,
Osaka 540-8585, Japan
Phone: (06) 6764-3555
Fax: (06) 6764-3981

© 2000 KYOCERA MITA CORPORATION

KYOCERA is a trademark of Kyocera Corporation

mita is a registered trademark of KYOCERA MITA CORPORATION

Printed in Holland