KYOCERA mita

KM-4530
KM-5530

PARTS LIST

Published in Dec.'01
842BC120

NOTE

1.Indicate parts number and machine model when placing an order.

eg.	Parts Number	Parts Name	Machine Model	Cycle	Quantity
	2BC04010	FRONT COVER	KM-4530	50Hz	1
	2BD04010	FRONT COVER	KM-5530	50Hz	1

2.Service calls and freight will be charged separately.

3.Symbols in the "Parts Number" column.

- Parts with "◉" indicates the service parts and the parts without "◉" can not be supplied.

- Parts with "•" are component parts or sub-assemblies of the assembly appearing immediately above them.

eg.	Parts Number	Parts Name	Parts Number	Parts Name
	2AC00700	LSU ADJUSTMENT ASS'Y	•2AC13040	MOUNT,LSU ADJUSTMENT
			•2AC13030	PIN,LSU ADJUSTMENT

- Parts with "• •" are component parts or sub-assembly with "•" appearing immediately above them.

eg.	Parts Number	Parts Name	Parts Number	Parts Name
	•2A068171	GRID ASS'Y	••36710061	FRONT HOUSING,GRID
			••61710330	WIRE,GRID(SUS)

4.See the last page of this parts list for the classification of the screws in the illustrations.

5.Items indicated by shaded areas ( ) are supply parts and should be ordered through your Regional Office.

CONTENTS

FIG. 1 COVER SECTION 2
FIG. 2 FRAME SECTION 4
FIG. 3 CASSETTE SECTION 6
FIG. 4 DECK A SECTION 8
FIG. 5 DECK B SECTION 10
FIG. 6 DECK CONVEYING SECTION 12
FIG. 7 PRIMARY PAPER FEED SECTION 14
FIG. 8 IMAGING SECTION I 16
FIG. 9 IMAGING SECTION II (MC) 18
FIG. 10 OPTICAL SECTION I 20
FIG. 11 OPTICAL SECTION II 22
FIG. 12 LASER SCANNER UNIT 24
FIG. 13 DEVELOPING SECTION 26
FIG. 14 CLEANING SECTION I 28
FIG. 15 CLEANING SECTION II 30
FIG. 16 CONVEYING SECTION I 32
FIG. 17 CONVEYING SECTION II 34
FIG. 18 CONVEYING SECTION III 36
FIG. 19 FIXING SECTION 38
FIG. 20 TRANSFER SECTION 40
FIG. 21 DRIVING SECTION I 42
FIG. 22 DRIVING SECTION II 44
FIG. 23 DUPLEX SECTION I 46
FIG. 24 DUPLEX SECTION II 48
FIG. 25 DUPLEX SECTION III 50
FIG. 26 EJECT SECTION 52
FIG. 27 BYPASS FEED SECTION 54
FIG. 28 BYPASS & VERTICAL CONVEYING SECTION 56
FIG. 29 HOPPER SECTION I 58
FIG. 30 HOPPER SECTION II 60
FIG. 31 COVER SECTION (DF) 62
FIG. 32 FRAME SECTION (DF) 64
FIG. 33 PAPER FEED-IN SECTION (DF) 66
FIG. 34 PAPER CONVEYING SECTION (DF) 68
FIG. 35 REVERSING SECTION (DF) 70
FIG. 36 PAPER EJECT SECTION (DF) 72
FIG. 37 DRIVING SECTION (DF) 74
FIG. 38 ELECTRICAL SECTION (DF) 76
FIG. 39 ELECTRICAL SECTION I 78
FIG. 40 ELECTRICAL SECTION II 80
FIG. 41 OPERATION SECTION 82
FIG. 42 ACCESSORIES & TOOLS 84
FIG. 43 OPTION 86

• INDEX 88

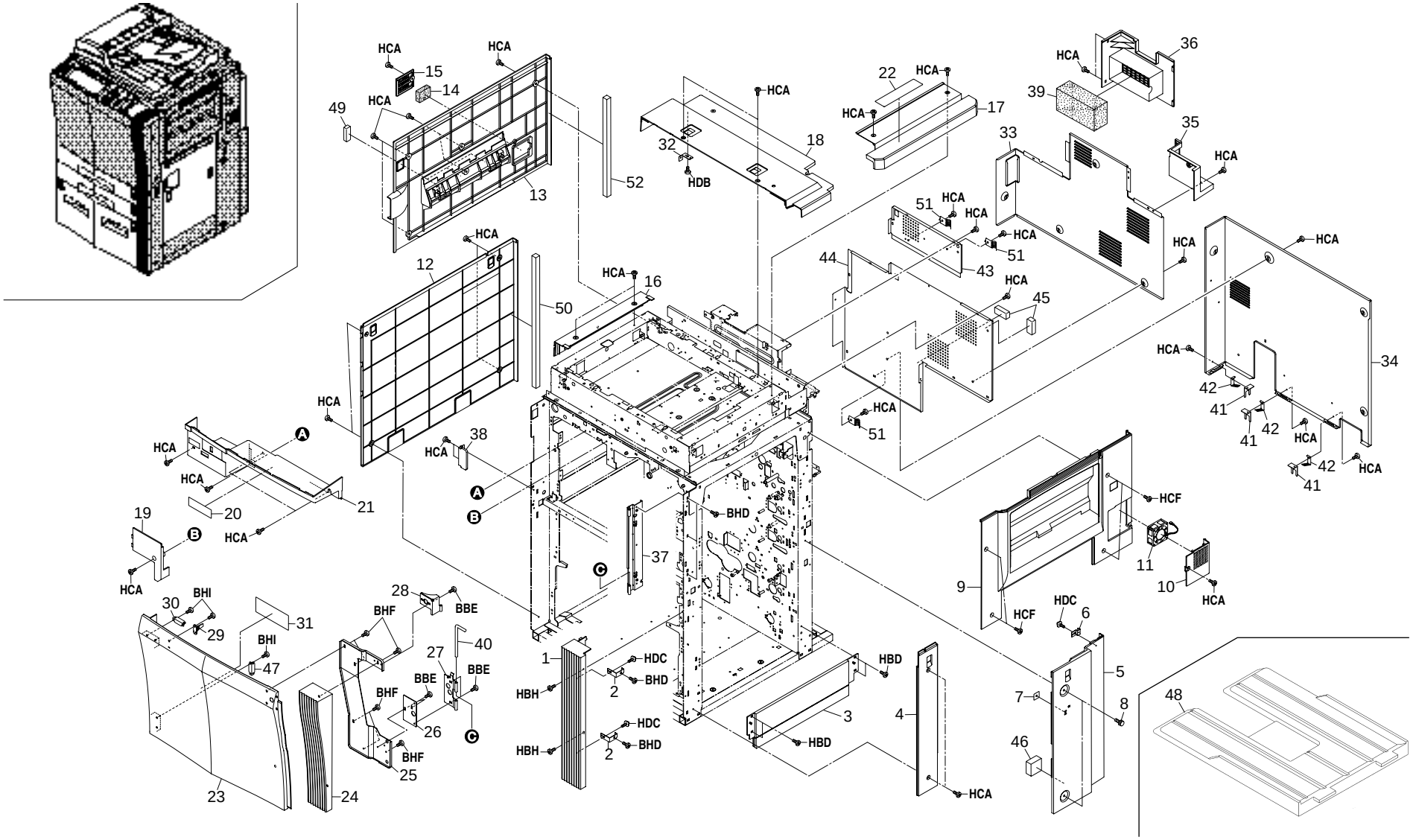
HCA
HDB
HBH
HBD
HDC
BHD
BHF
BHI
BBE
HCF
1
2
3
4
5
6
7
8
9
10
11
12
13
14
15
16
17
18
19
20
21
22
23
24
25
26
27
28
29
30
31
32
33
34
35
36
37
38
39
40
41
42
43
44
45
46
47
48
49
50
51
52
A
B
C

FIG. 1 COVER SECTION

SP	Ref. No.	Part. No.	Description	Quantity		
				120V	230V	240V
◉	1	2BC04030	LOWER RIGHT FRONT COVER	1	1	1
	2	2BC04450	LOWER RIGHT FRONT MOUNT,COVER	2	2	2
◉	3	2BC04180	LOWER INNER RIGHT COVER	1	1	1
◉	4	2BC04080	LOWER FRONT RIGHT COVER	1	1	1
◉	5	2BC04090	LOWER REAR RIGHT COVER	1	1	1
	6	2BC04470	LOWER REAR RIGHT MOUNT,COVER	1	1	1
	7	2AR07180	RETAINER M4 (KM-5530)	1	1	1
	8	2BC04510	LOWER REAR RIGHT RETAINING PIN,COVER	2	2	2
◉	9	2BC04070	RIGHT COVER,MIDDLE	1	1	1
◉	10	2BC04300	LID,DEVELOPING DUCT	1	1	1
◉	11	2BL27700	FAN COOLING(60-25)	1	1	1
◉	12	2BC04120	LOWER LEFT COVER	1	1	1
◉	13	2BC04110	LEFT COVER,MIDDLE	1	1	1
◉	14	2BC16350	FILTER,OZONE	1	1	1
◉	15	2BC04430	LID,CONVEYING DUCT	1	1	1
◉	16	2BC04100	UPPER LEFT COVER	1	1	1
◉	17	2BC04050	UPPER RIGHT COVER	1	1	1
◉	18	2BC04130	UPPER REAR COVER	1	1	1
◉	19	2BC04190	INNER COVER	1	1	1
◉	20	2A005060	LABEL,HIGH VOLTAGE CAUTION(EUR)	1	1	1
	21	2BC04480	LEFT COVER,IMAGE FORMATION	1	1	1
◉	22	2BC05050	LABEL,TONER SUPPLY OPERATION(EUR)	1	1	1
◉	23	2BC04010	FRONT COVER (KM-4530)	1	1	1
◉	23	2BD04010	FRONT COVER (KM-5530)	1	1	1
◉	24	2BC04020	UPPER RIGHT FRONT COVER	1	1	1
	25	2BC04250	FRONT MOUNT,COVER HINGE	1	1	1
	26	2BC04500	FRONT ADJUSTING PLATE,COVER	1	1	1
	27	2BC04280	FRONT HINGE B,COVER	1	1	1
	28	2BC04270	FRONT HINGE A,COVER	1	1	1
	29	65004171	HOLDER,SAFETY SWITCH	1	1	1
◉	30	60804120	MAGNET CATCH	1	1	1
◉	31	73905191	LABEL,SUPPLY(E,F,S)	1	1	1
	32	2BC04490	REAR MOUNT C,MIDDLE COVER	1	1	1
◉	33	2BC04150	REAR COVER A,MIDDLE	1	1	1
◉	34	2BC04160	LOWER REAR COVER	1	1	1
◉	35	2BC04410	REAR COVER B,MIDDLE	1	1	1
◉	36	2BC04420	REAR COVER C,MIDDLE	1	1	1
	37	2BC04260	FRONT HINGE,COVER MACHINE	1	1	1
	38	2BC04370	LOWER MOUNT,MAGNET	1	1	1
◉	39	2BC23020	FILTER,MAIN	1	1	1
	40	2BC04390	PIN,HINGE STOP	1	1	1
	41	2AC26320	HOLDER,GROUND	3	3	3
	42	2BC26300	REAR GROUND PLATE,COVER	3	3	3
	43	2BC26020	UPPER LID,SEQUENCE	1	1	1
	44	2BC26030	LOWER LID,SEQUENCE	1	1	1
	45	2BC04600	REAR SPONGE,COVER	2	2	2
	46	2BC04520	LOWER REAR RIGHT SPONGE,COVER	1	1	1
◉	47	2BC04530	FRONT MAGNET,COVER	1	1	1
◉	48	2A304190	COPY TRAY(EXP)	1	1	1
	49	2BC04590	LEFT SPONGE B,MIDDLE COVER(EUR) (KM-4530)		3	
	50	2BC04570	LOWER LEFT SPONGE,COVER(EUR) (KM-4530)		1	
	51	18526240	PLATE SPRING A,GROUND REINFORCEMENT		3	3
	52	2BC04580	LEFT SPONGE A,MIDDLE COVER(EUR) (KM-4530)		1	

• Parts with "•" are component parts or sub-assemblies of the assembly appearing immediately above them.
• Parts with "◉" indicates the Service parts.

• Parts with "• •" are component parts or sub-assembly with "•" appearing immediately above them.

FIG. 2 FRAME SECTION

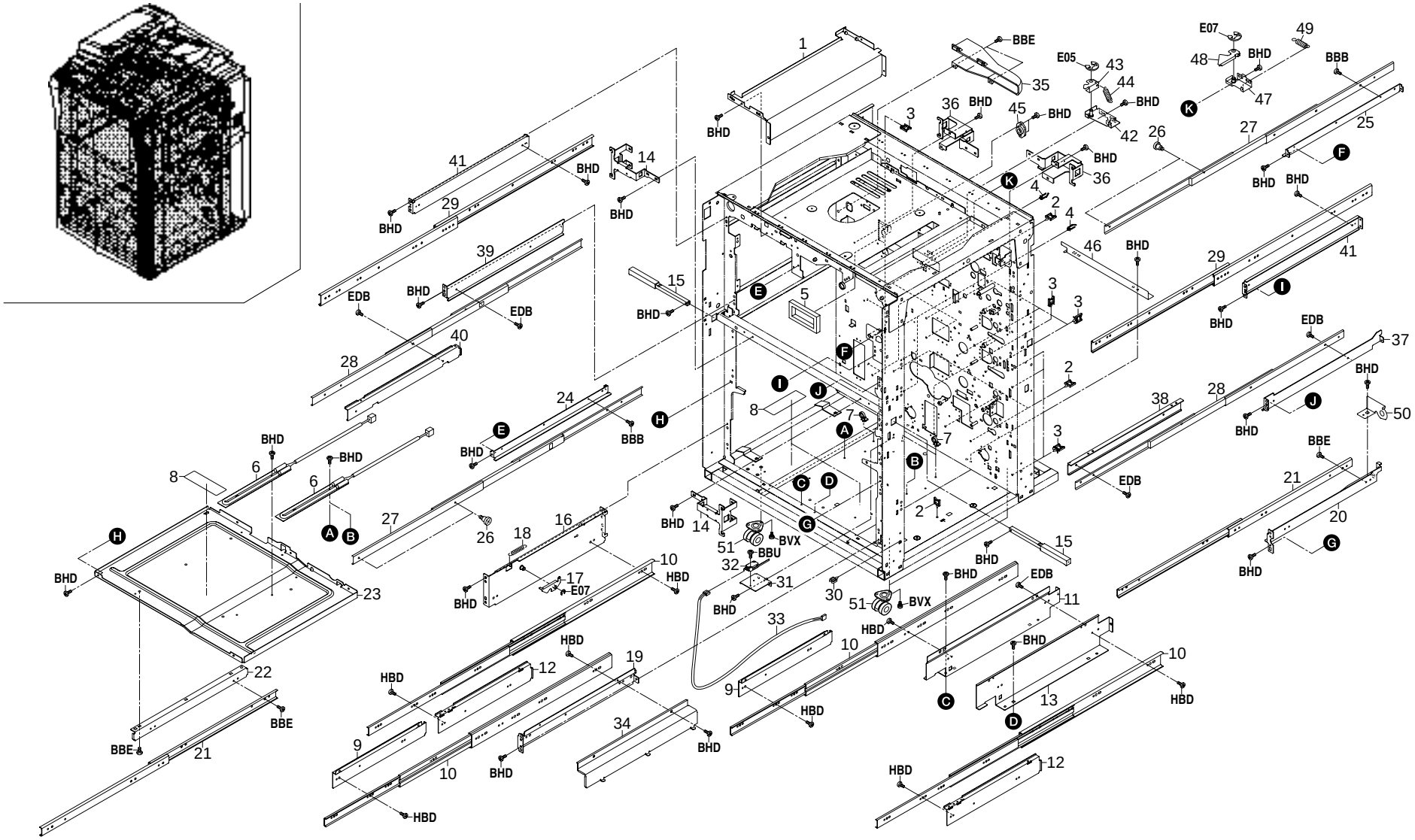

FIG. 2 FRAME SECTION

SP	Ref. No.	Part. No.	Description	Quantity		
				120V	230V	240V
	1	2BC02170	UPPER PARTITION,FIXING	1	1	1
	2	M2109000	WIRE SADDLE,WS-1NS	5	5	5
	3	M2109010	WIRE SADDLE,WS-2NS	9	9	9
	4	M2109210	LOCKING WIRE SADDLE,LWS-8S-2.5W	5	5	5
	5	2BC02230	SHIELD,CONVEYING DUCT	1	1	1
◉	6	2A727480	HEATER,DEHUMIDIFIER(120)	3		
◉	6	2A727490	HEATER,DEHUMIDIFIER(240)		3	3
	7	M2107120	BINDING BAND SG-130	5	5	5
	8	20305130	LABEL L,HIGH TEMPERATURE CAUTION(EXP)	3	3	3
	9	2BC07670	RIGHT MOUNT,SLIDER DECK	2	2	2
◉	10	2BC07680	SLIDER,DECK	4	4	4
	11	2BC07730	LEFT MOUNT,DECK MACHINE	1	1	1
	12	2BC07700	LEFT MOUNT,SLIDER DECK	2	2	2
	13	2BC07740	LEFT MOUNT A,DECK MACHINE	1	1	1
	14	2BC02130	FRONT MOUNT,HANDLE	2	2	2
	15	18502160	HANDLE,MACHINE	4	4	4
	16	2BC02100	LOWER LEFT REINFORCEMENT	1	1	1
	17	33902120	HOOK,CASSETTE RETAINING	1	1	1
	18	72418140	SPRING, BLADE	1	1	1
	19	2BC07750	RIGHT MOUNT A,DECK MACHINE	1	1	1
	20	2BC07510	RIGHT MOUNT,DECK CONVEYING SLIDER	1	1	1
◉	21	2BC07660	SLIDER,DECK CONVEYING	2	2	2
	22	2BC07500	LEFT MOUNT,DECK CONVEYING SLIDER	1	1	1
	23	2BC02120	UPPER REINFORCEMENT,DECK	1	1	1
	24	2BC08170	LEFT MOUNT,IMAGE FORMATION SLIDER	1	1	1
	25	2BC08090	MOUNT,IMAGE FORMATION SLIDER	1	1	1
	26	2AC08170	PIN,IMAGE FORMATION UNIT	4	4	4
◉	27	2BC08100	SLIDER,IMAGE FORMATION	2	2	2
◉	28	66107084	SLIDER,CASSETTE	2	2	2
◉	29	2BC16150	SLIDER,IMAGE FORMATION	2	2	2
	30	M2105770	CLAMP,UAMS-09-0(KITAGAWA)	1	1	1
	31	2BC06190	MOUNT,INTERLOCK SWITCH	1	1	1
◉	32	2BC27800	INTERLOCK SWITCH A	1	1	1
	33	2BC27330	JUNCTION WIRING,INTERLOCK	1	1	1
	34	2BC26260	LOWER RIGHT SHIELD PLATE	1	1	1
	35	2BC16330	DUCT,CONVEYING	1	1	1
	36	2BC02140	REAR MOUNT,HANDLE	2	2	2
	37	2BC21530	RIGHT MOUNT,DUPLEX SLIDER	1	1	1
	38	36707881	RIGHT MOUNT,RAIL	1	1	1
	39	2BC21520	LEFT MOUNT,DUPLEX SLIDER	1	1	1
	40	2AC02110	MOUNT,RAIL DUPLEX	1	1	1
	41	2BC16310	MOUNT,CONVEYING SLIDER	2	2	2
	42	2BC21510	MOUNT,DUPLEX HOOK	1	1	1
	43	2BC21500	HOOK,DUPLEX RETAINING	1	1	1
	44	33902130	SPRING,CASSETTE HOOK	1	1	1
◉	45	33922470	BUSHING,DUPLEX DRIVE	1	1	1
	46	2BC02240	SHIELD PLATE,BASE	1	1	1
	47	2BC16450	MOUNT,CONVEYING HOOK	1	1	1
	48	2BC16460	HOOK,CONVEYING RETAINING	1	1	1
	49	2BC16470	SPRING,CONVEYING HOOK	1	1	1
	50	2BC22400	SUPPORT PLATE,DECK PAPER FEED DRIVE	1	1	1
	51	2A002170	CASTER,UA	4	4	4

• Parts with "•" are component parts or sub-assemblies of the assembly appearing immediately above them.
• Parts with "◉" indicates the Service parts.

• Parts with "• •" are component parts or sub-assembly with "•" appearing immediately above them.

FIG. 3 CASSETTE SECTION

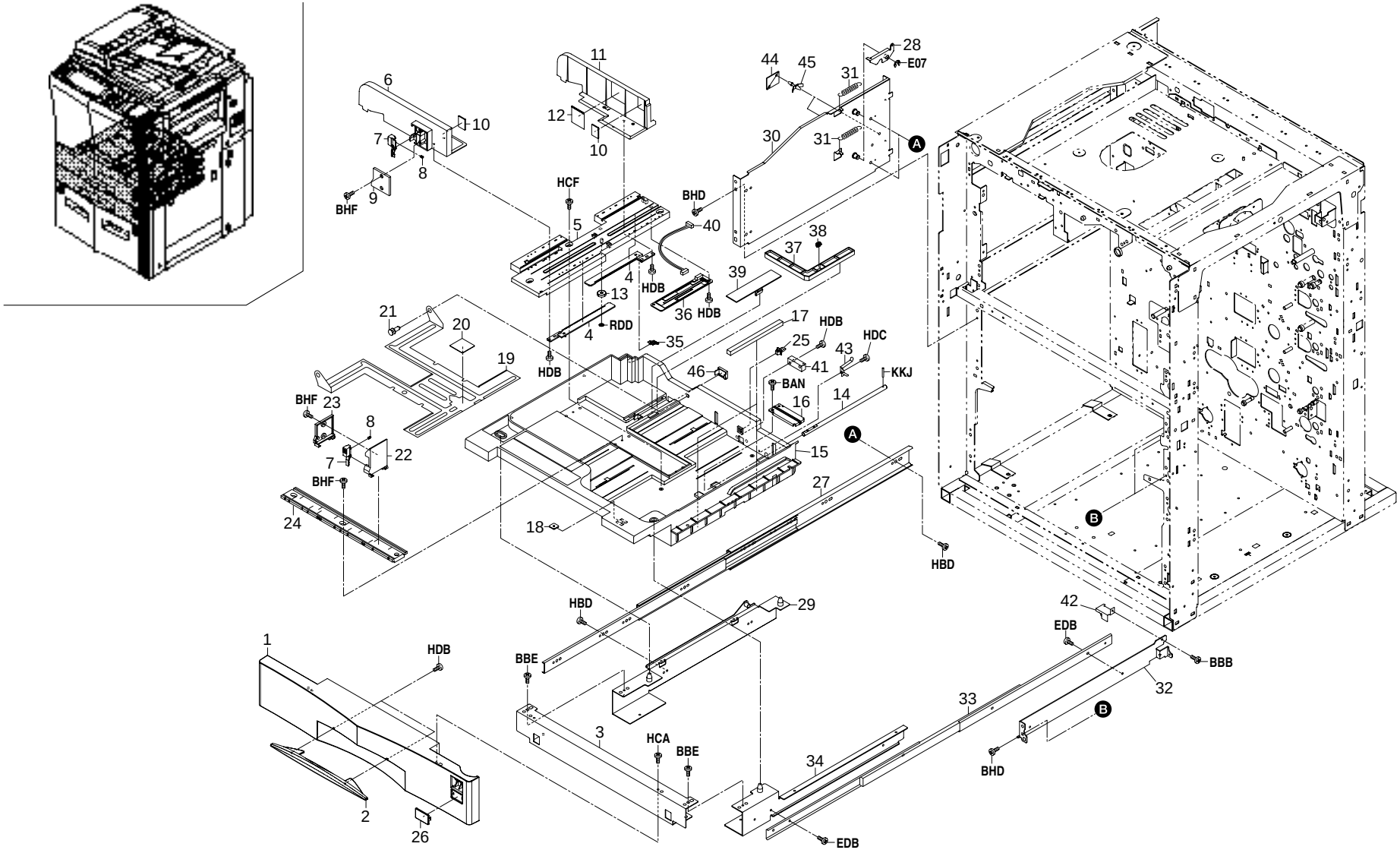

FIG. 3 CASSETTE SECTION

SP	Ref. No.	Part. No.	Description	Quantity		
				120V	230V	240V
◉	1	2BC04310	COVER,CASSETTE	2	2	2
◉	2	2BL04160	HANDLE CASSETTE	2	2	2
	3	2BC06550	FRONT STAY,CASSETTE	2	2	2
	4	2BC06750	RACK,CURSOR	4	4	4
	5	2BC06720	RAIL A,CURSOR	2	2	2
◉	6	2BC06730	CURSOR A,CASSETTE	2	2	2
◉	7	33907080	LEVER,CASSETTE CURSOR	4	4	4
◉	8	2BC06950	SPRING,CURSOR	4	4	4
◉	9	33907090	LID A,CURSOR	2	2	2
◉	10	60907170	CUSHION,CASSETTE R	4	4	4
◉	11	2BC06740	CURSOR B,CASSETTE	2	2	2
◉	12	61705110	LABEL,PAPER UPPER LIMIT	2	2	2
◉	13	65914120	GEAR 18,IDLE DEVELOPING	2	2	2
	14	2BC06710	SHAFT,LIFT CASSETTE	2	2	2
	15	2BC06700	CASSETTE	2	2	2
	16	2BC06090	WORK PLATE,LIFT CASSETTE	2	2	2
	17	33907210	CUSHION,CASSETTE WORK PLATE	4	4	4
	18	2AR07180	RETAINER M4	2	2	2
	19	33907020	WORK PLATE,CASSETTE	2	2	2
◉	20	66107100	PAD,CASSETTE	2	2	2
	21	66007310	PIN,CASSETTE WORK PLATE	2	2	2
◉	22	33907130	CURSOR C,CASSETTE	2	2	2
	23	33907140	LID C,CURSOR	2	2	2
	24	2BC06630	RAIL C,CURSOR	2	2	2
	25	77906210	CASSETTE STOPPER	2	2	2
◉	26	2BL04310	PLATE NUMBER	1	1	1
◉	26	2BL04370	PLATE NUMBER 2	1	1	1
	27	2BC07680	SLIDER,DECK	2	2	2
	28	33902120	HOOK,CASSETTE RETAINING	2	2	2
	29	2BC06540	LEFT MOUNT,RAIL	2	2	2
	30	2BC02180	INNER LEFT REINFORCEMENT	1	1	1
	31	33902130	SPRING,CASSETTE HOOK	2	2	2
	32	2BC06500	RIGHT REINFORCEMENT	2	2	2
◉	33	66107084	SLIDER,CASSETTE	2	2	2
	34	2BC06490	RIGHT MOUNT,RAIL	2	2	2
	35	2BC07860	TERMINAL,PAPER SIZE DETECTION	2		
◉	36	33928111	SIZE DETECTION PCB	2		
	37	2BC06650	DETECTION PLATE,PAPER SIZE	2		
	38	66106080	SPRING,PAD	2		
	39	2BC06640	LID,PAPER SIZE DETECTION	2		
	40	33927210	WIRE,CASSETTE UNIT	2	2	2
	41	J0463080	PLUG,QR/P15-8S-C(HIROSE)	2		
	42	2BC06920	PROTECTING PLATE,PAPER FEED DRIVE	1	1	1
	43	2BC07830	GROUND PLATE,CASSETTE	2	2	2
◉	44	2A327010	SENSOR,HUMIDITY	1	1	1
	45	M2108000	SPACER,KGLS-3S	2	2	2
	46	33907180	DETECTION PLATE,CASSETTE		2	2

- Parts with "•" are component parts or sub-assemblies of the assembly appearing immediately above them.
- Parts with "◉" indicates the Service parts.
- Parts with "• •" are component parts or sub-assembly with "•" appearing immediately above them.

FIG. 4 DECK A SECTION

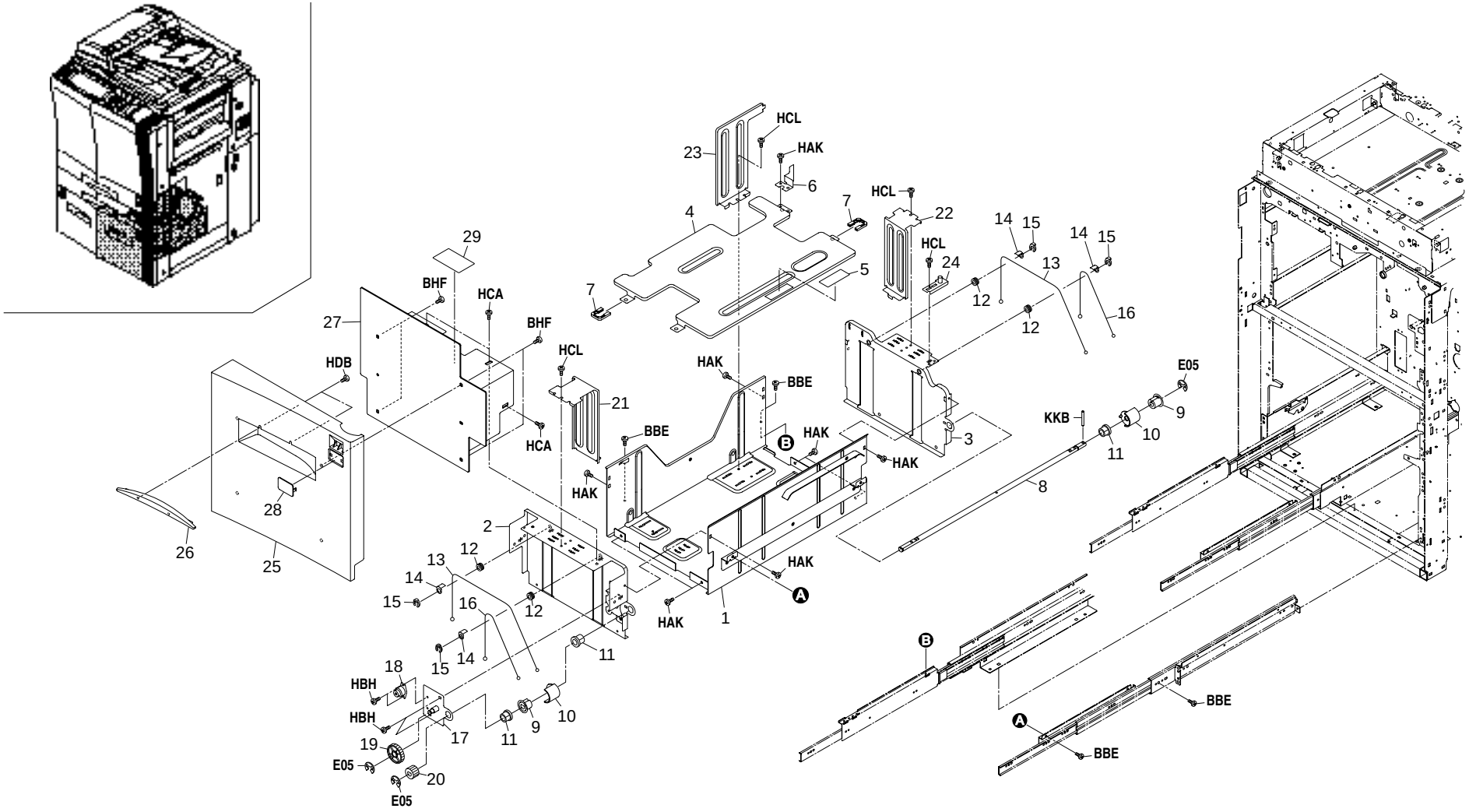

FIG. 4 DECK A SECTION

SP	Ref. No.	Part. No.	Description	Quantity		
				120V	230V	240V
	1	2BC07070	BASE A,DECK	1	1	1
	2	2BC07080	FRONT FRAME A,DECK	1	1	1
	3	2BC07090	REAR FRAME A,DECK	1	1	1
	4	2BC07170	LIFT PLATE,DECK	1	1	1
	5	2BC07250	PAD,LIFT	1	1	1
	6	2BC07130	ACTUATOR A,REMAINING DETECTION	1	1	1
	7	2BC07120	SPACER,DECK LIFT	2	2	2
	8	2BC07010	SHAFT,LIFT DRIVE	1	1	1
◉	9	2BC07020	FRONT PULLEY,LIFT DRIVE	2	2	2
	10	2BC07040	HOLDER,WIRE	2	2	2
◉	11	67322230	BUSHING 8	3	3	3
◉	12	2BC07050	PULLEY,LIFT WIRE	4	4	4
◉	13	2BC07190	RIGHT WIRE B,LIFT	2	2	2
	14	2BC07060	HOLDER,WIRE PULLEY	4	4	4
◉	15	5MVX111DN003	RING STOPPER	4	4	4
◉	16	2BC07180	RIGHT WIRE A,LIFT	2	2	2
	17	2BC07100	MOUNT,DECK DAMPER	1	1	1
◉	18	2BC07030	DAMPER,DECK LIFT PLATE	1	1	1
◉	19	63822220	GEAR,41	1	1	1
◉	20	2BC07110	GEAR 20	1	1	1
	21	2BC07140	FRONT CURSOR A,DECK	1	1	1
	22	2BC07150	REAR CURSOR A,DECK	1	1	1
	23	2BC07160	STOPPER A,TRAILING EDGE HOLDER DECK		1	1
	24	2BC07280	ADJUSTING PLATE A,DECK	1	1	1
◉	25	2BC04330	COVER A,DECK	1	1	1
◉	26	2BC04380	HANDLE,DECK	1	1	1
	27	2BC04340	MOUNT A,DECK COVER	1	1	1
◉	28	3CF04050	PLATE NUMBER 3	1	1	1
	29	2BC05220	LABEL,PAPER SUPPLY OPERATION	1	1	1

• Parts with "•" are component parts or sub-assemblies of the assembly appearing immediately above them.
• Parts with "◉" indicates the Service parts.

• Parts with "• •" are component parts or sub-assembly with "•" appearing immediately above them.

FIG. 5 DECK B SECTION

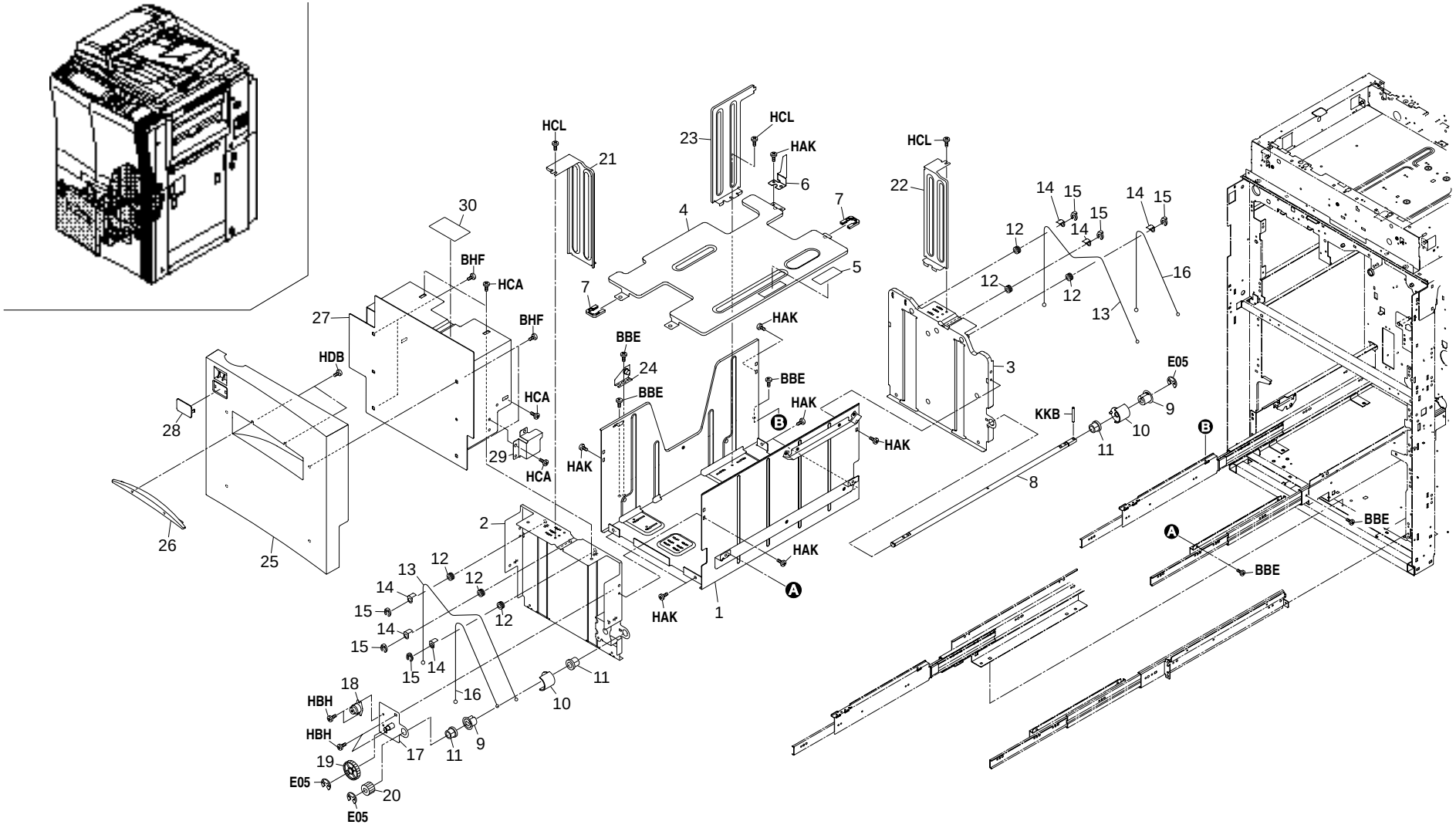

FIG. 5 DECK B SECTION

SP	Ref. No.	Part. No.	Description	Quantity		
				120V	230V	240V
	1	2BC07220	BASE B,DECK	1	1	1
	2	2BC07230	FRONT FRAME B,DECK	1	1	1
	3	2BC07240	REAR FRAME B,DECK	1	1	1
	4	2BC07170	LIFT PLATE,DECK	1	1	1
	5	2BC07250	PAD,LIFT	1	1	1
	6	2BC07470	ACTUATOR B,REMAINING DETECTION	1	1	1
	7	2BC07120	SPACER,DECK LIFT	2	2	2
	8	2BC07010	SHAFT,LIFT DRIVE	1	1	1
◉	9	2BC07020	FRONT PULLEY,LIFT DRIVE	2	2	2
	10	2BC07040	HOLDER,WIRE	2	2	2
◉	11	67322230	BUSHING 8	3	3	3
◉	12	2BC07050	PULLEY,LIFT WIRE	6	6	6
◉	13	2BC07340	LEFT WIRE B,LIFT	2	2	2
	14	2BC07060	HOLDER,WIRE PULLEY	6	6	6
◉	15	5MVX111DN003	RING STOPPER	6	6	6
◉	16	2BC07330	LEFT WIRE A,LIFT	2	2	2
	17	2BC07100	MOUNT,DECK DAMPER	1	1	1
◉	18	2BC07030	DAMPER,DECK LIFT PLATE	1	1	1
◉	19	63822220	GEAR,41	1	1	1
◉	20	2BC07110	GEAR 20	1	1	1
	21	2BC07290	FRONT CURSOR B,DECK	1	1	1
	22	2BC07300	REAR CURSOR B,DECK	1	1	1
	23	2BC07310	STOPPER B,TRAILING EDGE HOLDER DECK		1	1
	24	2BC07760	ADJUSTING PLATE B,DECK	1	1	1
◉	25	2BC04350	COVER B,DECK	1	1	1
◉	26	2BC04380	HANDLE,DECK	1	1	1
	27	2BC04360	MOUNT B,DECK COVER	1	1	1
◉	28	3CF04060	PLATE NUMBER4	1	1	1
	29	2BC07890	PROTECTING PLATE,DECK DAMPER	1	1	1
	30	2BC05220	LABEL,PAPER SUPPLY OPERATION	1	1	1

- Parts with "•" are component parts or sub-assemblies of the assembly appearing immediately above them.
- Parts with "◉" indicates the Service parts.

- Parts with "• •" are component parts or sub-assembly with "•" appearing immediately above them.

FIG. 6 DECK CONVEYING SECTION

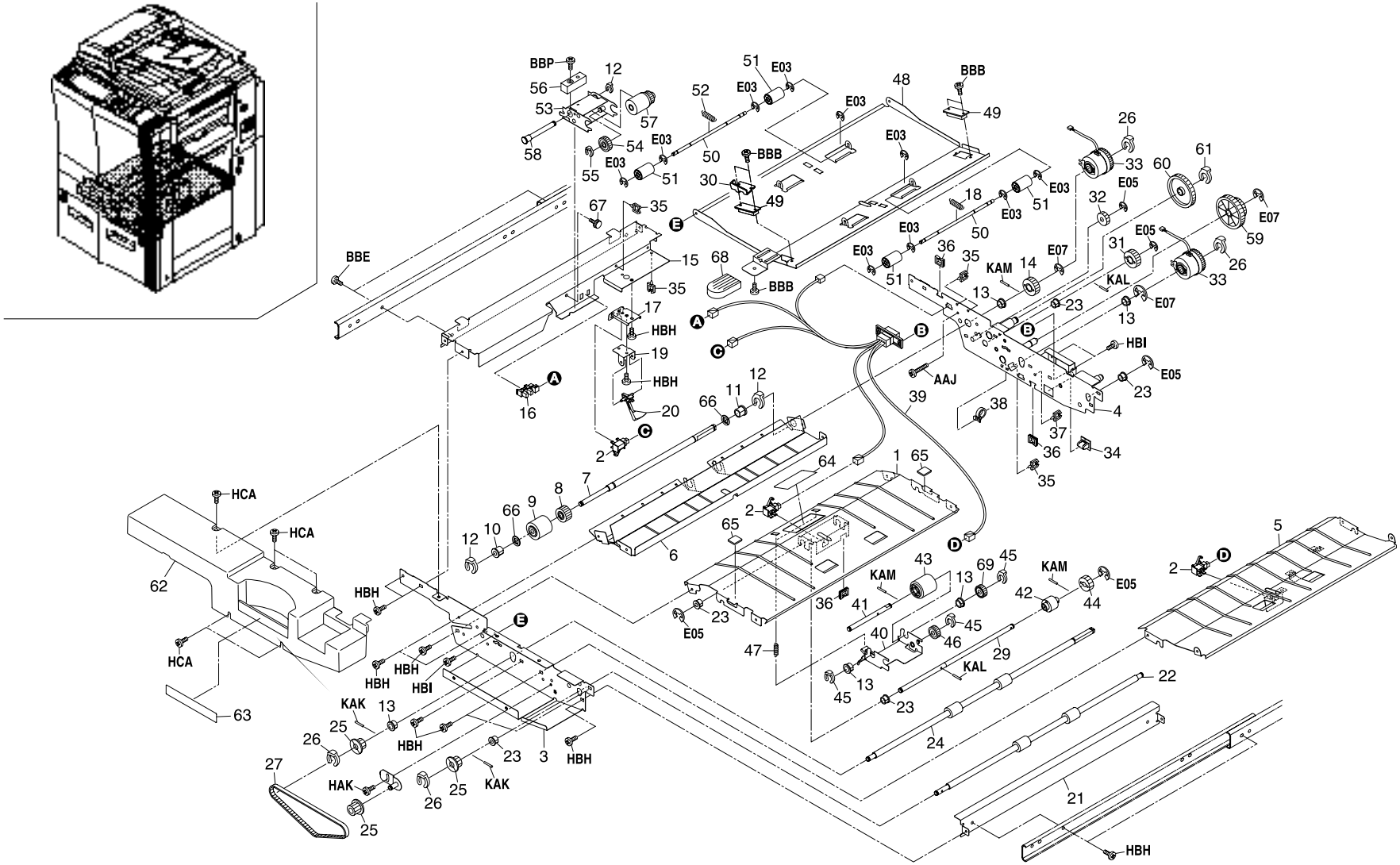

FIG. 6 DECK CONVEYING SECTION

SP	Ref. No.	Part. No.	Description	Quantity		
				120V	230V	240V
	1	2BC07430	LOWER GUIDE,DECK PAPER FEED	1	1	1
◉	2	2BL27410	SWITCH CONVEYING	3	3	3
	3	2BC07620	FRONT FRAME,DECK CONVEYING	1	1	1
	4	2BC07630	REAR FRAME,DECK CONVEYING	1	1	1
	5	2BC07450	LOWER GUIDE,DECK CONVEYING	1	1	1
	6	2BC07420	UPPER GUIDE,DECK PAPER FEED	1	1	1
	7	2BC07560	SHAFT,DECK PAPER FEED	1	1	1
◉	8	2BC06790	UPPER GEAR,PAPER FEED	1	1	1
◉	9	2BC06900	PULLEY,PAPER FEED	1	1	1
◉	10	60907880	BUSHING,BYPASS SHAFT	1	1	1
◉	11	36706310	BUSHING,PAPER FEED	1	1	1
◉	12	33906630	STOPPER 5,RING	3	3	3
◉	13	67322230	BUSHING 8	5	5	5
◉	14	72622060	GEAR,CENTRAL LEAD ROLLER	1	1	1
	15	2BC07770	LEFT STAY,DECK CONVEYING	1	1	1
◉	16	2BL27450	SWITCH PI	1	1	1
	17	2BC07460	MOUNT B,PE SWITCH DECK	1	1	1
◉	18	2BC07870	SPRING A,DECK CONVEYING PULLEY	1	1	1
	19	2BC07850	MOUNT B,PE ACTUATOR	1	1	1
◉	20	2BC06380	ACTUATOR,PAPER EMPTY	1	1	1
	21	2BC07780	RIGHT STAY,DECK CONVEYING	1	1	1
◉	22	2BC07390	RIGHT ROLLER,DECK CONVEYING	1	1	1
◉	23	73210450	BUSH, 6	5	5	5
◉	24	2BC07400	LEFT ROLLER,DECK CONVEYING	1	1	1
◉	25	68721640	PULLEY 20,DUPLEX CONVEYING	3	3	3
◉	26	34806150	STOPPER 5	4	4	4
◉	27	2BC07410	BELT,DECK CONVEYING	1	1	1
	28	2BC07840	TENSION PLATE,DECK CONVEYING	1	1	1
	29	2BC07570	SHAFT,RETARD SUPPORT PLATE	1	1	1
	30	2BC07900	REINFORCEMENT,GUIDE HANDLE	1	1	1
◉	31	66022190	GEAR,21 DEVELOPING	1	1	1
◉	32	33906160	GEAR 16,PAPER FEED	1	1	1
◉	33	2AC06240	CLUTCH,PAPER FEED	2	2	2
	34	77906210	CASSETTE STOPPER	1	1	1
	35	M2105740	MINIATURE CLAMP,UAMS-05S-2	5	5	5
	36	M2104260	EDGING,EDS-0607U(KITAGAWA)	3	3	3
	37	M2105770	CLAMP,UAMS-09-0(KITAGAWA)	1	1	1
	38	M2107120	BINDING BAND SG-130	1	1	1
	39	2BC27390	WIRE,DECK CONVEYING UNIT	1	1	1
	40	2BC07370	MOUNT,DECK RETARD PULLEY	1	1	1
	41	2BC07580	SHAFT,DECK RETARD	1	1	1
◉	42	33906070	TORQUE LIMITER,PAPER FEED	1	1	1
◉	43	33906060	LOWER PULLEY,PAPER FEED	1	1	1
◉	44	2BC07880	GEAR 15,JOINT	1	1	1
◉	45	5MVX111DN003	RING STOPPER	3	3	3
◉	46	29822230	GEAR 16T,PF IDLE	1	1	1
	47	2BC07380	SPRING 400,DECK RETARD	2	2	2
	48	2BC07440	UPPER GUIDE,DECK CONVEYING	1	1	1
	49	62207620	MAGNET, FEED SHIFT	2	2	2
	50	2BC07590	SHAFT,DECK CONVEYING PULLEY	2	2	2
◉	51	2BC07520	UPPER PULLEY,DECK CONVEYING	4	4	4
	52	2BC07540	SPRING,DECK CONVEYING PULLEY	1	1	1
	53	2BC06300	SUPPORT PLATE,LEADING FEED PULLEY	1	1	1
◉	54	34922220	GEAR 18,RETARD	1	1	1
◉	55	63511220	STOP RING,4	1	1	1
	56	33906180	WEIGHT,LEADING FEED PULLEY	1	1	1
◉	57	2BC06810	PULLEY,LEADING FEED	1	1	1
	58	33906080	SHAFT,LEADING FEED PULLEY	1	1	1
◉	59	2BC07490	GEAR 27/45,DECK	1	1	1
◉	60	71821390	IDLE GEAR 48	1	1	1
◉	61	33973300	STOPPER 7,CARTRIDGE	1	1	1
◉	62	2BC07480	COVER,DECK CONVEYING	1	1	1
◉	63	2BC05060	LABEL,DECK CONVEYING COVER	1	1	1
◉	64	2BC07600	FILM,DECK RETARD	1	1	1
	65	2BC07610	SPONGE,DECK CONVEYING	2	2	2
	66	2BC07210	SPACER,DECK LEADING FEED	2	2	2
	67	2BC04510	LOWER REAR RIGHT RETAINING PIN,COVER	1	1	1
	68	78607460	KNOB CONVEYING SECTION	1	1	1
◉	69	45728802	TENSION GEAR 15	1	1	1

• Parts with "•" are component parts or sub-assemblies of the assembly appearing immediately above them.
• Parts with "◉" indicates the Service parts.

• Parts with "• •" are component parts or sub-assembly with "•" appearing immediately above them.

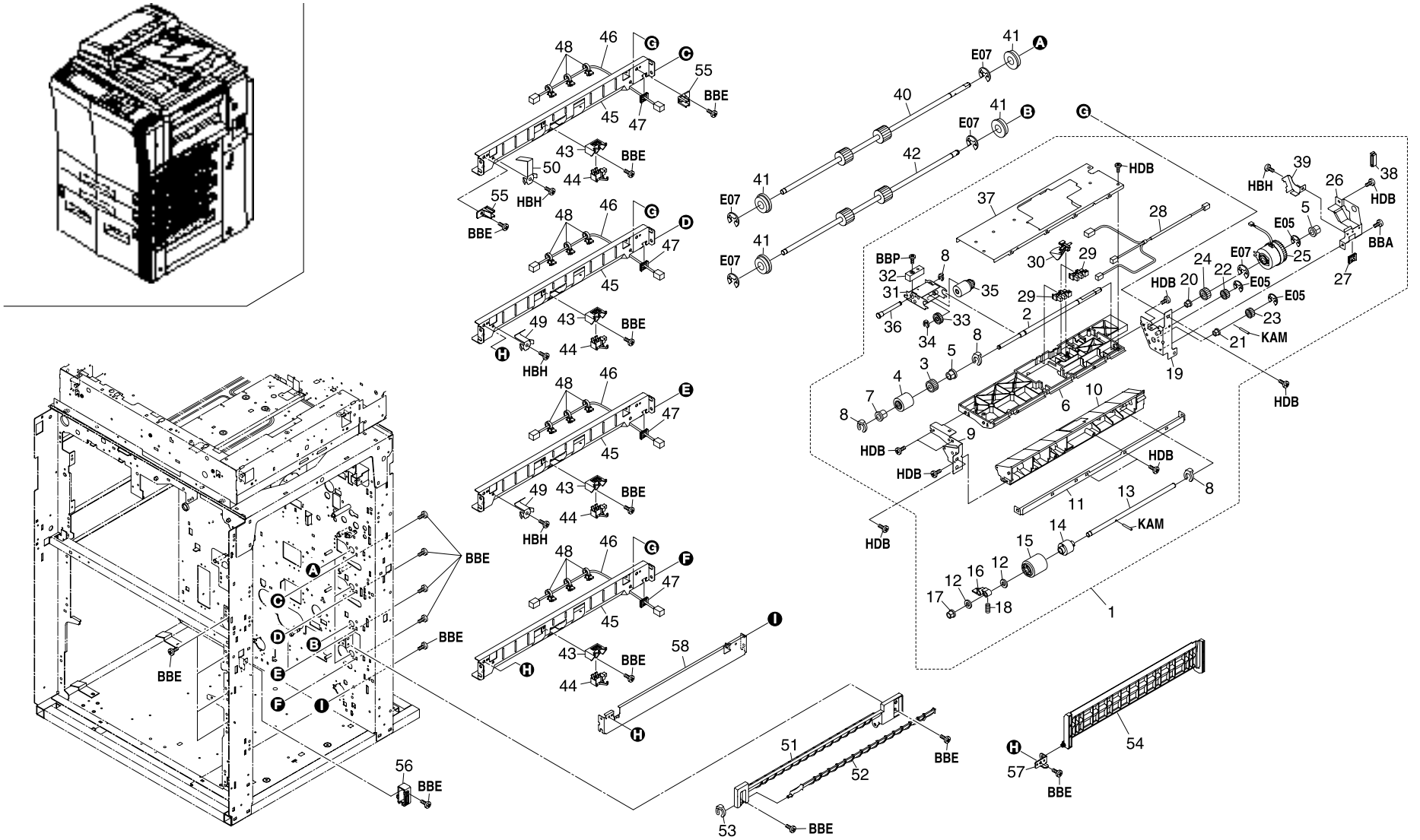
BBE
HBH
HDB
E07
E05
BBP
BBA
KAM

FIG. 7 PRIMARY PAPER FEED SECTION

SP	Ref. No.	Part. No.	Description	Quantity		
				120V	230V	240V
◉	1	2BC93010	PARTS,ASS'Y PRIMARY PAPER FEED,SP	3	3	3
	2	•2BC06340	UPPER SHAFT,PAPER FEED	3	3	3
	3	•2BC06790	UPPER GEAR,PAPER FEED	3	3	3
◉	4	•2BC06900	PULLEY,PAPER FEED	3	3	3
◉	5	•60907880	BUSHING,BYPASS SHAFT	6	6	6
	6	•2BC06010	UPPER HOUSING,PAPER FEED	3	3	3
◉	7	•36706310	BUSHING,PAPER FEED	3	3	3
◉	8	•33906630	STOPPER 5,RING	12	12	12
	9	•2BC06310	FRONT FRAME,PAPER FEED	3	3	3
	10	•2BC06020	LOWER HOUSING,PAPER FEED	3	3	3
	11	•2BC06360	LOWER REINFORCEMENT,HOUSING PAPER FEED	3	3	3
◉	12	•33906211	VIBRATION INSULATOR,RELEASE LEVER	6	6	6
	13	•2BC06820	LOWER SHAFT,PAPER FEED	3	3	3
◉	14	•33906070	TORQUE LIMITER,PAPER FEED	3	3	3
◉	15	•33906060	LOWER PULLEY,PAPER FEED	3	3	3
	16	•33906090	LOWER LEVER,PAPER FEED PULLEY RELEASE	3	3	3
◉	17	•63806290	BUSHING,6	3	3	3
	18	•33906551	LOWER SPRING B,PAPER FEED	3	3	3
	19	•2BC06320	REAR FRAME,PAPER FEED	3	3	3
◉	20	•67322230	BUSHING 8	3	3	3
◉	21	•73210450	BUSH, 6	3	3	3
◉	22	•33906160	GEAR 16,PAPER FEED	3	3	3
◉	23	•45727501	GEAR,TONER FEED ROLLER	3	3	3
◉	24	•71815110	IDLE GEAR 18,SUB UNIT	3	3	3
◉	25	•2AC06240	CLUTCH,PAPER FEED	3	3	3
	26	•2BC06530	SUPPORT PLATE,PAPER FEED CLUTCH	3	3	3
	27	•M2104200	EDGING EDS-1	3	3	3
	28	•2BC27400	WIRE,PAPER FEED UNIT	3	3	3
◉	29	•2BL27450	SWITCH PI	6	6	6
◉	30	•2BC06380	ACTUATOR,PAPER EMPTY	3	3	3
	31	•2BC06300	SUPPORT PLATE,LEADING FEED PULLEY	3	3	3
	32	•33906180	WEIGHT,LEADING FEED PULLEY	3	3	3
◉	33	•34922220	GEAR 18,RETARD	3	3	3
◉	34	•63511220	STOP RING,4	3	3	3
◉	35	•2BC06810	PULLEY,LEADING FEED	3	3	3
	36	•33906080	SHAFT,LEADING FEED PULLEY	3	3	3
	37	•2BC06350	UPPER REINFORCEMENT,HOUSING PAPER FEED	3	3	3
	38	•J0144080	CASE,175694-8(AMP)	3	3	3
	39	•2BC06930	PROTECTING PLATE,PAPER FEED UNIT DRIVE	3	3	3
◉	40	2BC06390	ROLLER C,FEED	3	3	3
◉	41	33906610	BEARING,FEED	8	8	8
◉	42	2BC06400	ROLLER D,FEED	1	1	1
	43	33906620	MOUNT BASE,PAPER FEED SWITCH	4	4	4
◉	44	2BC27010	SWITCH,CONVEYING	4	4	4
	45	2BC06430	LEFT GUIDE,FEED	4	4	4
	46	2BC27420	WIRE B,PAPER FEED SWITCH	4	4	4
	47	M2104260	EDGING,EDS-0607U(KITAGAWA)	4	4	4
	48	M2307010	BINDING BAND,T18R	12	12	12
	49	2BC06660	PLATE SPRING,GUIDE CONFLUENCE	2	2	2
	50	2BC06670	UPPER PLATE SPRING,GUIDE CONFLUENCE	1	1	1
	51	2BC07640	UPPER GUIDE,DECK CONFLUENCE	1	1	1
◉	52	68707020	LOWER GUIDE,DUPLEX FEED	1	1	1
◉	53	63511220	STOP RING,4	1	1	1
	54	2BC06460	GUIDE,CONFLUENCE	3	3	3
	55	2BC06800	HOLDER,VERTICAL CONVEYING	2	2	2
◉	56	2BC06560	COVER,INTERLOCK	1	1	1
	57	2BC06860	FULCRUM PLATE,GUIDE CONFLUENCE	3	3	3
	58	2BC06850	LOWER MOUNT,PAPER FEED	1	1	1

• Parts with "•" are component parts or sub-assemblies of the assembly appearing immediately above them.
• Parts with "◉" indicates the Service parts.

• Parts with "• •" are component parts or sub-assembly with "•" appearing immediately above them.

FIG. 8 IMAGING SECTION I

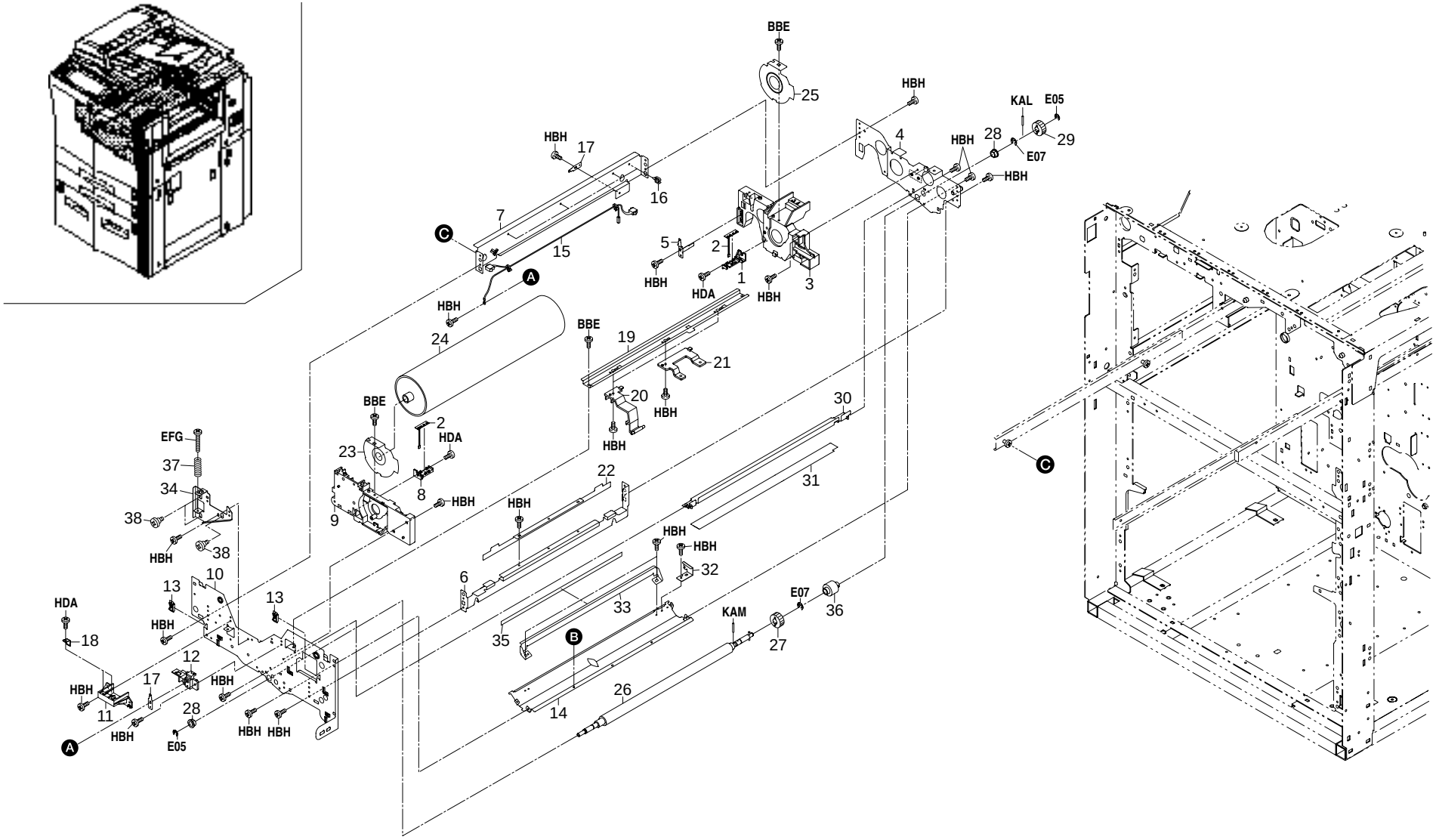

FIG. 8 IMAGING SECTION I

SP	Ref. No.	Part. No.	Description	Quantity		
				120V	230V	240V
	1	2BC08160	REAR MOUNT BASE PCL	1	1	1
◉	2	2BC27090	LAMP PCL	2	2	2
	3	2BC08040	REAR FRAME,IMAGE FORMATION	1	1	1
	4	2BC08060	REAR REINFORCEMENT,IMAGE FORMATION	1	1	1
	5	2BC08110	TERMINAL,BIAS JOINT	1	1	1
	6	2BC08070	RIGHT REINFORCEMENT,IMAGE FORMATION	1	1	1
	7	2BC08080	LEFT REINFORCEMENT,IMAGE FORMATION	1	1	1
	8	2BC08150	FRONT MOUNT BASE PCL	1	1	1
	9	2BC08030	FRONT FRAME,IMAGE FORMATION	1	1	1
	10	2BC08050	FRONT REINFORCEMENT,IMAGE FORMATION	1	1	1
	11	2A010060	FRONT POSITIONING PLATE,MAIN CHARGER	1	1	1
	12	2BC08120	TERMINAL BASE,DEVELOPING BIAS	1	1	1
	13	M2104260	EDGING,EDS-0607U(KITAGAWA)	2	2	2
◉	14	2BC08520	UPPER GUIDE,REGISTRATION	1	1	1
	15	2BC27500	JUNCTION WIRING,DEVELOPING BIAS	1	1	1
	16	M2105740	MINIATURE CLAMP,UAMS-05S-2	4	4	4
	17	2BC14180	TERMINAL,DEVELOPING BIAS	2	2	2
	18	36710290	PLATE SPRING,MC HOLDER	2	2	2
	19	33914261	RAIL,IMAGE FORMATION	1	1	1
	20	2BC14160	HOLDER,DEVELOPING	2	2	2
	21	2BC14170	HOLDER,SUB HOPPER	1	1	1
	22	33914250	PRESSING PLATE,DEVELOPING	1	1	1
	23	2BC08010	FRONT RETAINER,DRUM	1	1	1
◉	24	2BC82020	SET,DRUM	1	1	1
	25	2BC08020	REAR RETAINER,DRUM	1	1	1
◉	26	2BC08500	UPPER ROLLER,REGISTRATION	1	1	1
◉	27	71815110	IDLE GEAR 18,SUB UNIT	1	1	1
◉	28	67322230	BUSHING 8	2	2	2
◉	29	66018160	GEAR 19,SPIRAL ROLLER	1	1	1
	30	2BC08600	UPPER FRONT GUIDE,TRANSFER	1	1	1
◉	31	2BC17160	SEAL,PRE TRANSFER CHARGE	1	1	1
	32	2BC08620	RETAINER,TORQUE LIMITER	1	1	1
◉	33	2BC08650	MOUNT,REGISTRATION SEAL	1	1	1
	34	2BC10050	ADJUSTING PLATE,MAIN CHARGER	1	1	1
◉	35	2BL07940	CLEANER REGISTRATION	1	1	1
	36	3AK16240	TORQUE LIMITER,MIDDLE DRIVE	1	1	1
	37	65009050	SPRING,DEVELOPING ROCK	1	1	1
	38	73918080	PIN,CLEANING BLADE	3	3	3

- Parts with "•" are component parts or sub-assemblies of the assembly appearing immediately above them.
- Parts with "◉" indicates the Service parts.

- Parts with "• •" are component parts or sub-assembly with "•" appearing immediately above them.

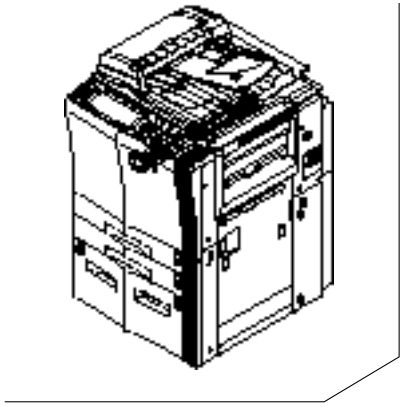

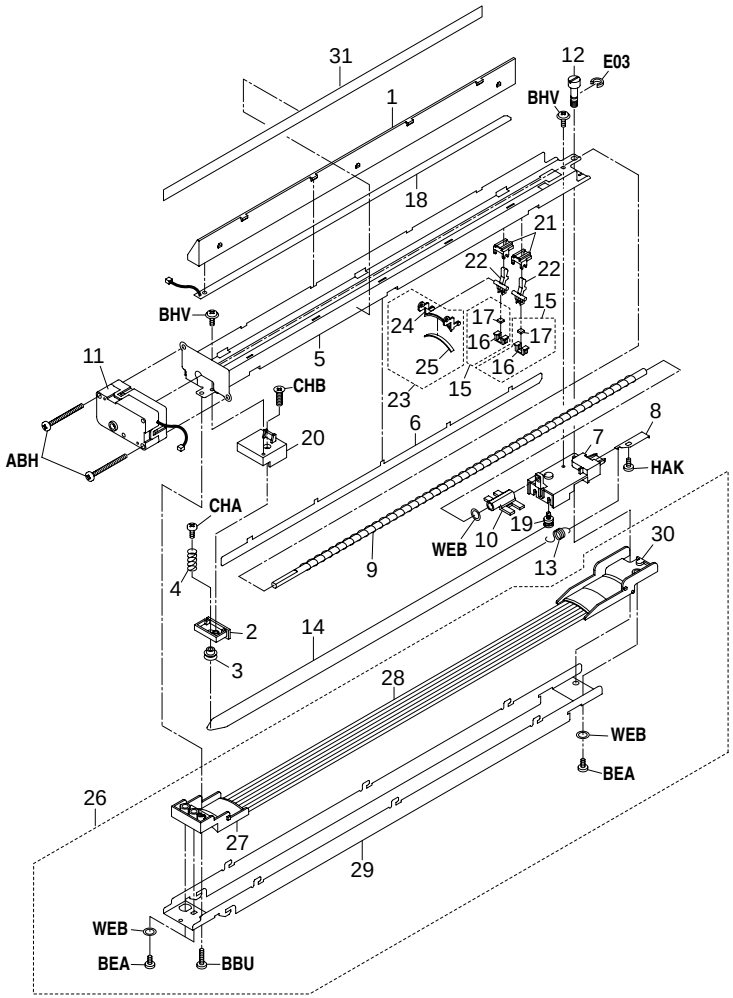
31
1
12
E03
BHV
18
21
22
22
15
BHV
24
17
16
17
11
5
25
16
15
CHB
23
6
8
20
7
ABH
HAK
CHA
19
30
WEB
10
13
4
9
2
14
3
28
WEB
BEA
26
27
29
WEB
BEA
BBU

FIG. 9 IMAGING SECTION II (MC)

SP	Ref. No.	Part. No.	Description	Quantity		
				120V	230V	240V
◉		2BC93030	PARTS,ASS'Y MAIN CHARGER,SP	1	1	1
	1	•2BC10040	RAIL,CLEANING LAMP	1	1	1
	2	•2A010150	MOVING BASE,MAIN CHARGER ADJUSTMENT	1	1	1
	3	•2A010140	PULLEY,MAIN CHARGER ADJUSTMENT	1	1	1
	4	•36716670	SPRING,TRANSFER ELECTRODE	1	1	1
	5	•2BC10010	BASE,MAIN CHARGER	1	1	1
	6	•2A010030	INNER SHIELD,MC	1	1	1
	7	•36710050	REAR HOUSING,MC	1	1	1
◉	8	•36710100	TERMINAL,MAIN CHARGER	1	1	1
	9	•2A010081	SPIRAL,CHARGER CLEANING	1	1	1
	10	•33917211	WORK PLATE,CLEANING SLIDER	1	1	1
◉	11	•2AC16190	UNIT,CLEANING MOTOR	1	1	1
	12	•36710271	RETAINING PIN,MAIN CHARGER	1	1	1
◉	13	•48527200	SPRING,CHARGER	1	1	1
◉	14	•2A068240	WIRE,MAIN CHARGER	1	1	1
◉	15	•2A068220	MC CLEANING PAD ASS'Y	2	2	2
	16	••61710190	HOLDER,MC CLEANING PAD	2	2	2
	17	••2A010180	PAD,MC WIRE CLEANING	2	2	2
◉	18	•2AR27031	LAMP,CLEANING LAMP	1	1	1
◉	19	•33910230	PIN CHARGER	1	1	1
	20	•36710041	FRONT HOUSING,MC	1	1	1
◉	21	•36710111	SLIDER,MC CLEANING PAD	2	2	2
◉	22	•36710120	LEVER,MC CLEANING PAD	2	2	2
◉	23	•36768081	GRID CLEANING PAD ASS'Y	1	1	1
	24	••36710131	HOLDER,GRID CLEANING PAD	1	1	1
	25	••36710140	PAD,GRID WIRE CLEANING	1	1	1
◉	26	•2A068171	GRID ASS'Y	1	1	1
	27	••36710061	FRONT HOUSING,GRID	1	1	1
	28	••61710330	WIRE,GRID(SUS)	1	1	1
	29	••2A010020	SHIELD,MAIN CHARGER	1	1	1
	30	••36710070	REAR HOUSING,GRID	1	1	1
	31	•2BC05150	LABEL,UNIT REPLACEMENT	1	1	1

• Parts with "•" are component parts or sub-assemblies of the assembly appearing immediately above them.
• Parts with "◉" indicates the Service parts.

• Parts with "• •" are component parts or sub-assembly with "•" appearing immediately above them.

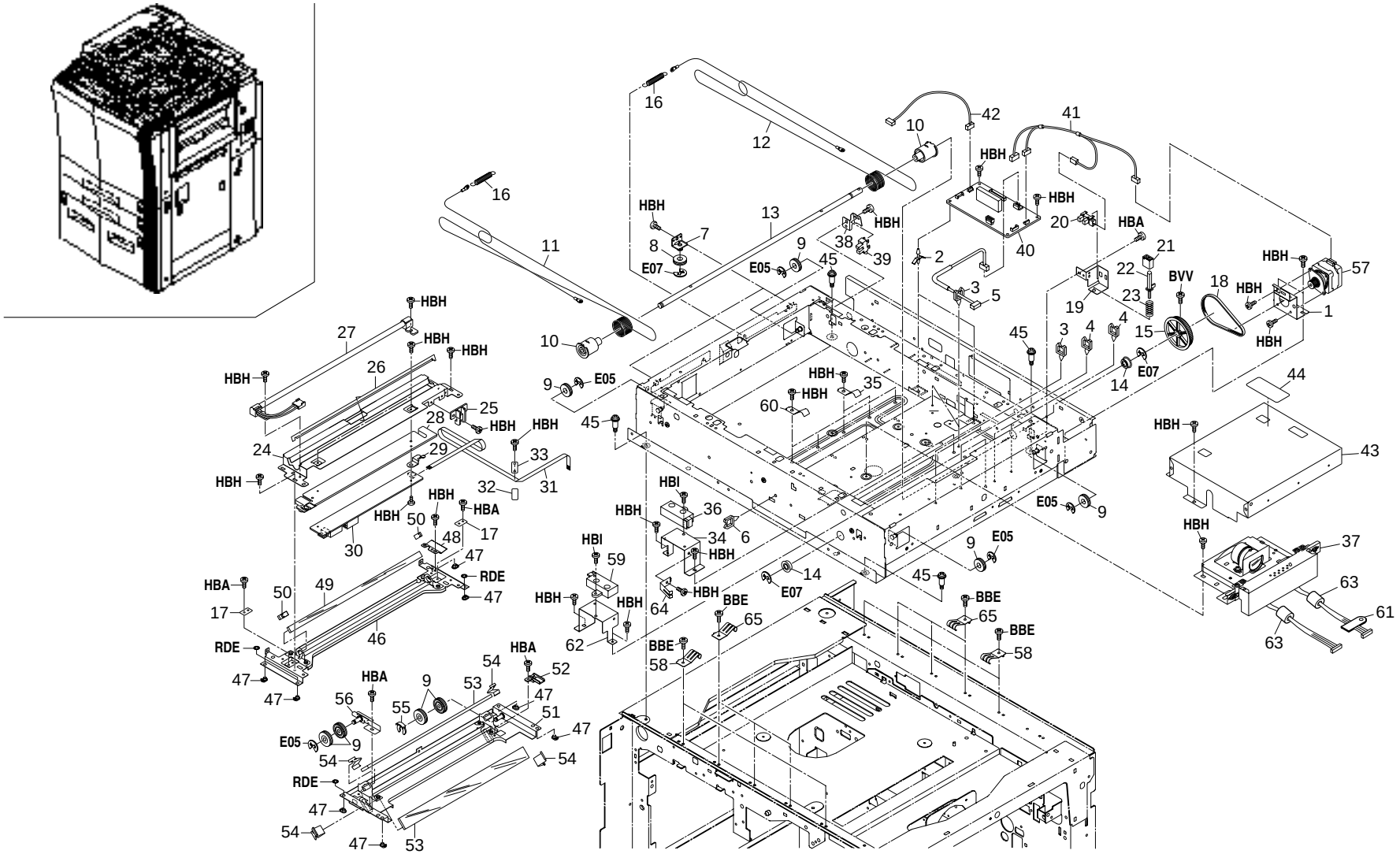
16
12
10
42
41
HBH
16
11
13
HBH
HBH
20
HBA
HBH
7
8
E07
9
E05
45
38
39
2
40
21
22
BVV
18
HBH
57
HBH
1
19
23
3
5
4
15
HBH
45
3
4
14
E07
44
27
HBH
HBH
HBH
HBH
26
10
9
E05
HBH
HBH
35
60
HBH
45
25
28
HBH
HBH
24
29
33
HBH
32
31
HBH
HBH
HBA
50
48
17
30
47
HBI
36
HBH
34
6
HBH
HBI
59
HBH
64
HBH
14
E07
45
9
E05
E05
9
HBH
43
HBH
37
63
61
63
HBA
50
49
17
RDE
47
46
HBH
HBH
62
BBE
65
BBE
58
BBE
65
BBE
58
RDE
47
47
HBA
56
HBA
9
54
53
52
47
55
51
47
E05
9
54
54
RDE
47
54
47
53

FIG. 10 OPTICAL SECTION I

SP	Ref. No.	Part. No.	Description	Quantity		
				120V	230V	240V
	1	2AC12250	MOUNT,SCANNER MOTOR	1	1	1
	2	M2108000	SPACER,KGLS-3S	2	2	2
	3	M2105730	MINIATURE CLAMP,UAMS-07-0	3	3	3
	4	M2105730	MINIATURE CLAMP,UAMS-07-0	3		
	5	2A327360	WIRE,ORIGINAL SIZE DETECTION(METRIC)		1	1
	5	2BC27650	WIRE,ORIGINAL SIZE DETECTION(INCH)	1		
	6	M2109010	WIRE SADDLE,WS-2NS	1	1	1
	7	2A012130	MOUNT,SCANNER PULLEY	2	2	2
◉	8	18314080	PULLEY,MOVING IDLE	2	2	2
◉	9	2BC12120	PULLEY,SCANNER	8	8	8
◉	10	35912060	PULLEY,SCANNER DRUM	2	2	2
◉	11	2AC12170	WIRE,SCANNER	1	1	1
◉	12	2AC12420	WIRE S,SCANNER	1	1	1
	13	2AC12210	SHAFT,SCANNER DRIVE	1	1	1
◉	14	28107400	BEARING,688ZZNR	2	2	2
◉	15	35912340	PULLEY,SCANNER DRIVE	1	1	1
	16	72112520	TENSION SPRING,SCANNER WIRE	2	2	2
	17	29912420	HOLDER,WIRE ROPE	2	2	2
◉	18	33522100	BELT 117,VERTICAL CONVEYING	1	1	1
	19	2AC12230	MOUNT,RELEASE SWITCH	1	1	1
◉	20	2BL27450	SWITCH PI	1	1	1
	21	2AC12360	GUIDE,RELEASE SWITCH	1	1	1
	22	2AC12370	SWITCH,RELEASE DETECTION	1	1	1
	23	2AC12380	SPRING,RELEASE SWITCH	1	1	1
	24	2AC12110	UPPER MIRROR FRAME A,SCANNER	1	1	1
	25	2AC12270	GUIDE FFC1	1	1	1
	26	2AC12130	REFLECTOR,SCANNER	1	1	1
◉	27	2BC12150	LAMP,SCANNER	1	1	1
	28	2AC12240	COVER,INVERTER	1	1	1
	29	2AC12440	GROUND PLATE,INVERTER	1	1	1
◉	30	2BC28120	INVERTER PCB	1	1	1
	31	2AC27800	WIRE,SCANNER INVERTER	1	1	1
◉	32	2AR12200	FILM,FFC	1	1	1
	33	2AC12300	HOLDER FFC	1	1	1
	34	2A312020	MOUNT BASE,ORIGINAL DETECTION SENSOR	1	1	1
	35	36708090	GROUND PLATE,STAY DRUM	2	2	2
◉	36	35927290	SENSOR,ORIGINAL DETECTION	1	1	1
◉	37	2BC93140	PARTS,ASS'Y ISU,SP	1	1	1
	38	2BC12110	MOUNT,SCANNER SWITCH	1	1	1
◉	39	72127100	PI SWITCH,OPTICAL SECTION	1	1	1
◉	40	2BC01070	SCANNER DRIVE PCB ASS'Y	1	1	1
	41	2A327400	WIRE A,SCANNER DRIVE	1	1	1
	42	2BC27590	WIRE B,SCANNER DRIVE	1	1	1
	43	2BC12100	COVER,ISU	1	1	1
	44	2A105180	LABEL,CAUTION CONTACT GLASS	1	1	1
	45	76610320	PIN TENSION PULLEY	4	4	4
	46	2AC12121	LOWER MIRROR FRAME A,SCANNER	1	1	1
◉	47	2AV12450	SLIDER,SCANNER	8	8	8
	48	2AC12261	LIGHT SHIELD,PI	1	1	1
◉	49	2AC12140	MIRROR A	1	1	1
	50	35912210	SPRING,MIRROR HOLDER	2	2	2
	51	2AC12160	MIRROR FRAME B	1	1	1
	52	35912360	GUIDE FFC2	1	1	1
◉	53	2AC12150	MIRROR B	2	2	2
	54	75712080	MIRROR HOLDER	4	4	4
◉	55	34806150	STOPPER 5	1	1	1
	56	2AC12400	ADJUSTING PLATE B,MIRROR FRAME	1	1	1
◉	57	2A012060	MOTOR,SCANNER	1	1	1
	58	2A026180	GROUND PLATE,SCANNER FRAME	4	4	4
◉	59	35927290	SENSOR,ORIGINAL DETECTION	1		
	60	36708090	GROUND PLATE,STAY DRUM		3	3
	61	M2505170	CLAMP,GNK-2N(NIKKO)		1	1
	62	2A312020	MOUNT BASE,ORIGINAL DETECTION SENSOR	1		
	63	33927590	CORE 7-15X18		2	2
	64	18526211	GROUND PLATE A,NOISE		1	1
	65	2A026180	GROUND PLATE,SCANNER FRAME		6	6

• Parts with "•" are component parts or sub-assemblies of the assembly appearing immediately above them.
• Parts with "◉" indicates the Service parts.

• Parts with "• •" are component parts or sub-assembly with "•" appearing immediately above them.

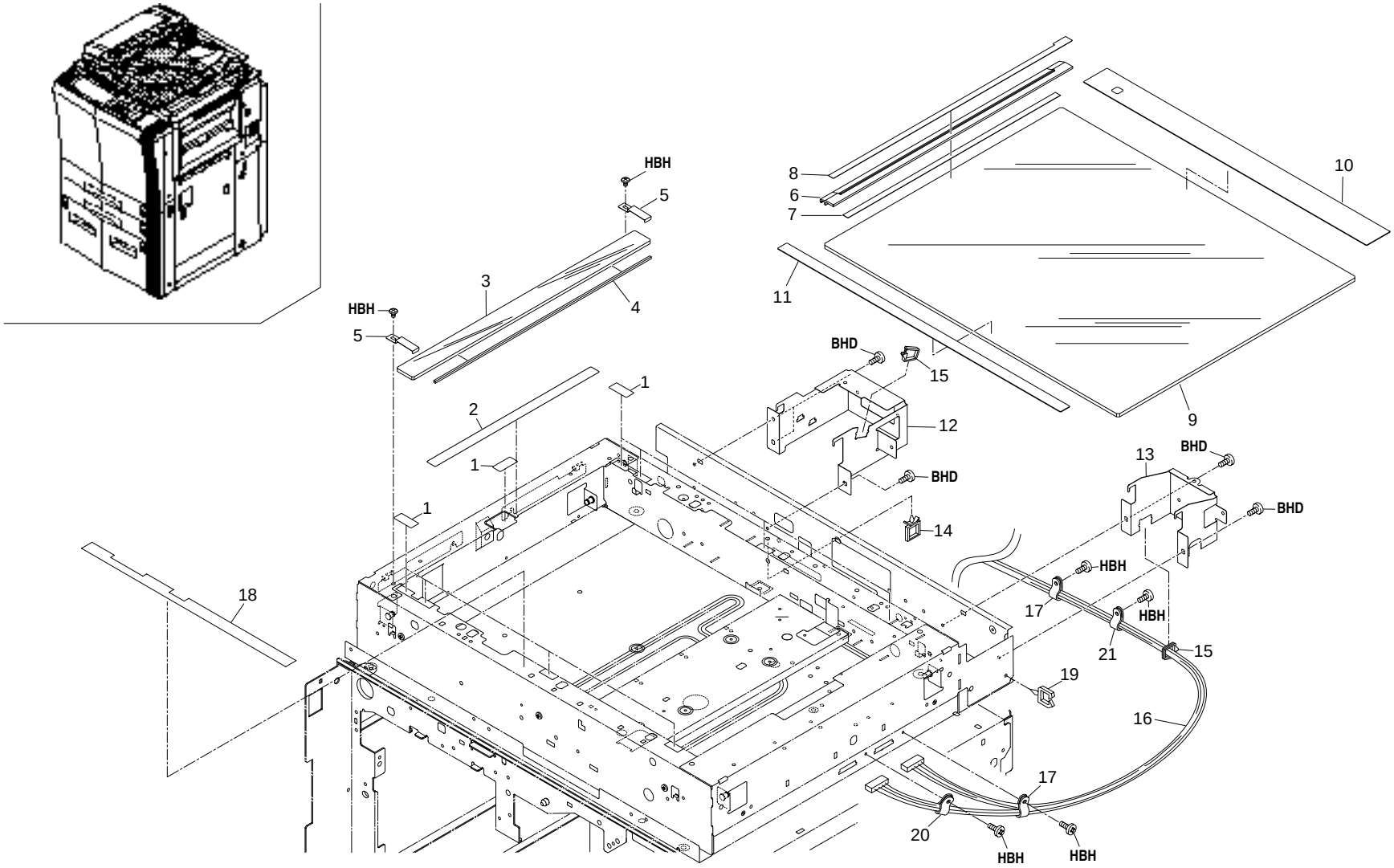
HBH
5
3
4
HBH
5
8
6
7
10
11
9
BHD
15
12
1
2
1
1
BHD
14
13
BHD
BHD
HBH
HBH
17
21
15
19
16
18
17
20
HBH
HBH

FIG. 11 OPTICAL SECTION II

SP	Ref. No.	Part. No.	Description	Quantity		
				120V	230V	240V
◉	1	29812291	CUSHION,CONTACT GLASS	9	9	9
◉	2	2AC12430	FILM,GLASS DUST SHIELD	1	1	1
◉	3	35911450	CONTACT GLASS,ADF	1	1	1
◉	4	35912531	SPONGE,ORIGINAL SIZE INDICATOR	1	1	1
	5	2AC12280	HOLDER,ADF CONTACT GLASS	2	2	2
◉	6	2A305070	LEFT ORIGINAL SIZE INDICATOR	1	1	1
◉	7	2BC12130	STANDARD PLATE,SHADING	1	1	1
◉	8	2AV12481	LABEL,ORIGINAL SIZE INDICATOR(METRIC)		1	1
◉	8	2AV12491	LABEL,ORIGINAL SIZE INDICATOR(INCH)	1		
◉	9	35912010	CONTACT GLASS	1	1	1
◉	10	2AV12460	REAR ORIGINAL SIZE INDICATOR(METRIC)		1	1
◉	10	2AV12470	REAR ORIGINAL SIZE INDICATOR(INCH)	1		
◉	11	35912490	FRONT ORIGINAL SIZE INDICATOR	1	1	1
	12	2BC26100	MOUNT,DF CONNECTOR	1	1	1
	13	2BC26130	UPPER RETAINER,SEQUENCE	1	1	1
	14	M2109210	LOCKING WIRE SADDLE,LWS-8S-2.5W	1	1	1
	15	M2104250	EDGING,EDS-17L(KITAGAWA)	2	2	2
	16	2BC27320	JUNCTION WIRING 1,CCD	1	1	1
	17	M2505190	CLAMP,GNK-4N(NIKKO)	2	2	2
	18	2BC12160	UPPER FILM,SCANNER	1	1	1
	19	M2109010	WIRE SADDLE,WS-2NS	1	1	1
	20	M2505170	CLAMP,GNK-2N(NIKKO)		1	1
	21	M2505190	CLAMP,GNK-4N(NIKKO)		1	1

- Parts with "•" are component parts or sub-assemblies of the assembly appearing immediately above them.
- Parts with "◉" indicates the Service parts.
- Parts with "• •" are component parts or sub-assembly with "•" appearing immediately above them.

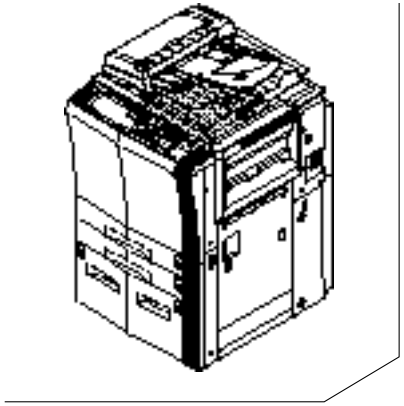

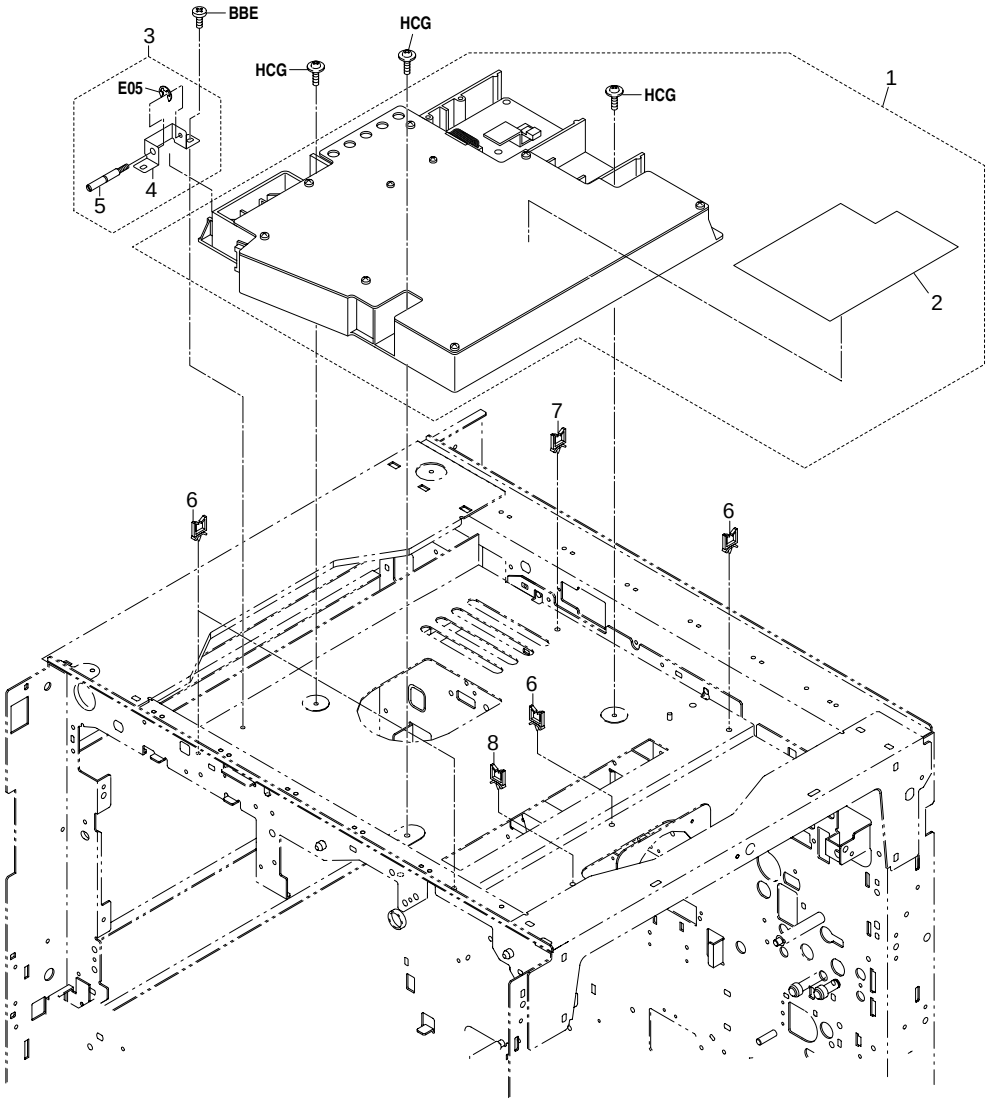
BBE
HCG
HCG
HCG
E05
1
2
3
4
5
6
6
6
7
8

FIG. 12 LASER SCANNER UNIT

SP	Ref. No.	Part. No.	Description	Quantity		
				120V	230V	240V
◉	1	2BC93150	PARTS,ASS'Y LSU(SP)	1	1	1
◉	2	•2BC13180	VIBRATION INSULATOR 2,COVER	1	1	1
	3	2AC00700	LSU ADJUSTMENT ASS'Y	1	1	1
	4	•2AC13040	MOUNT,LSU ADJUSTMENT	1	1	1
	5	•2AC13030	PIN,LSU ADJUSTMENT	1	1	1
	6	M2109010	WIRE SADDLE,WS-2NS	4	4	4
	7	M2109270	WIRE SADDLE,LWS-5S-2W(KITAGAWA)	1	1	1
	8	M2109000	WIRE SADDLE,WS-1NS	1	1	1

• Parts with "•" are component parts or sub-assemblies of the assembly appearing immediately above them.
• Parts with "◉" indicates the Service parts.

• Parts with "• •" are component parts or sub-assembly with "•" appearing immediately above them.

FIG. 13 DEVELOPING SECTION

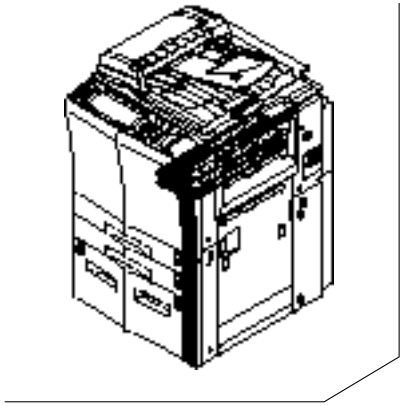

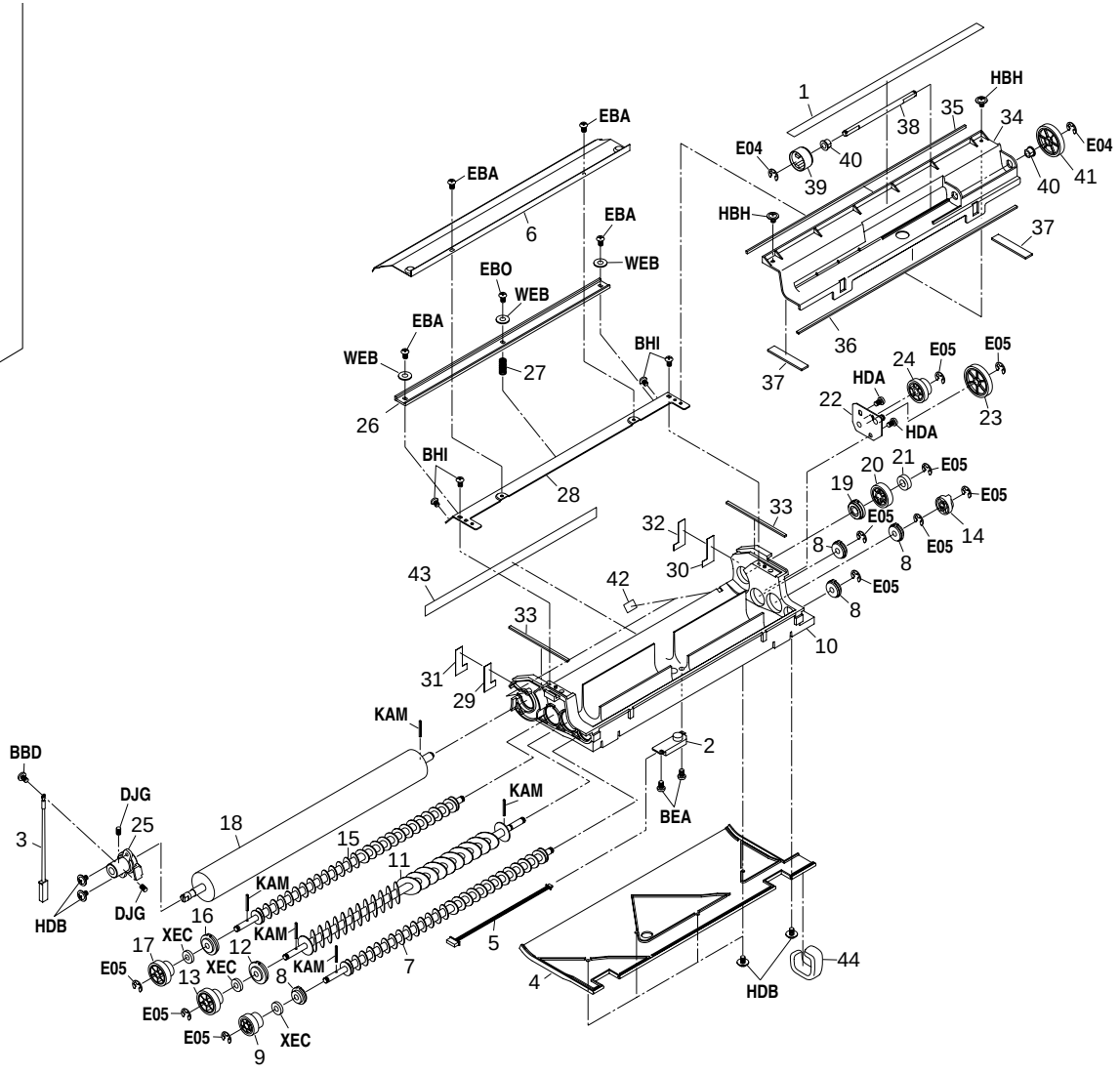

FIG. 13 DEVELOPING SECTION

SP	Ref. No.	Part. No.	Description	Quantity		
				120V	230V	240V
◉		2BC93040	PARTS,ASS'Y DEVELOPING,SP	1	1	1
	1	•2BC05150	LABEL,UNIT REPLACEMENT	1	1	1
◉	2	•33914190	TONER SENSOR	1	1	1
	3	•33927460	WIRE,TONER CONTROL SENSOR	1	1	1
	4	•2BC14120	LOWER COVER,DEVELOPING	1	1	1
	5	•2BC27490	WIRE,DEVELOPING UNIT	1	1	1
◉	6	•2BC14150	UPPER SEAL,DEVELOPING	1	1	1
	7	•33914090	SPIRAL C,DEVELOP	1	1	1
◉	8	•75915090	BUSHING AGITATION ROTOR SHAFT	4	4	4
◉	9	•33914150	GEAR C,SPIRAL	1	1	1
	10	•2BC14010	HOUSING,DEVELOPING	1	1	1
	11	•33914080	SPIRAL B,DEVELOPING	1	1	1
◉	12	•71814130	BUSHING 6-23,MAIN UNIT	1	1	1
◉	13	•33914140	FRONT GEAR B,SPIRAL	1	1	1
	14	•2BC14110	COUPLING,SPIRAL	1	1	1
	15	•33914070	SPIRAL A,DEVELOPING	1	1	1
◉	16	•71814100	BUSHING 6-21,MAIN UNIT	1	1	1
◉	17	•33914130	GEAR A,SPIRAL	1	1	1
	18	•2BC14020	MAGNET,DEVELOPING	1	1	1
◉	19	•2BC14230	BUSHING 8-19,DEVELOPING	1	1	1
◉	20	•2BC14240	GEAR,DEVELOPING SLEEVE	1	1	1
◉	21	•G3006880	BEARING #688ZZ	1	1	1
	22	•2BC14070	MOUNT,DEVELOPING INPUT	1	1	1
◉	23	•2BC14080	GEAR,DEVELOPING IDLE	1	1	1
◉	24	•2BC14250	GEAR,DEVELOPING INPUT	1	1	1
	25	•2BC14050	FRONT BUSHING,SLEEVE	1	1	1
	26	•2BC14030	DOCTOR BLADE,DEVELOPING	1	1	1
	27	•2AC14150	SPRING,DOCTOR BLADE ADJUSTMENT	1	1	1
	28	•2BC14040	REINFORCEMENT,DOCTOR BLADE	1	1	1
◉	29	•33914340	FRONT SEAL,DEVELOPING UNIT	1	1	1
◉	30	•33914350	REAR SEAL,DEVELOPING UNIT	1	1	1
◉	31	•33914290	FRONT FILM,DEVELOPING	1	1	1
◉	32	•33914300	REAR FILM,DEVELOPING	1	1	1
◉	33	•2BC14210	SPONGE A,DEVELOPING	2	2	2
	34	•2BC14060	COVER,DEVELOPING	1	1	1
◉	35	•33914310	SPONGE A,COVER DEVELOPING	1	1	1
◉	36	•33914330	SPONGE C,COVER DEVELOPING	1	1	1
◉	37	•2BC14220	SPONGE B,COVER DEVELOPING	2	2	2
	38	•2BC14100	SHAFT,TONER SUPPLY	1	1	1
	39	•33914370	COUPLING,SUB HOPPER DRIVE	1	1	1
◉	40	•29717230	BUSHING 6,FEED BACK	2	2	2
◉	41	•2BC14090	GEAR,TONER SUPPLY	1	1	1
◉	42	•2AC08300	LOWER SHIELD,IMAGE FORMATION GUIDE	2	2	2
	43	•2BC14280	LOWER FILM,DEVELOPING	1	1	1
	44	•2BC14290	SPONGE,DEVELOPING JOINT	1	1	1

• Parts with "•" are component parts or sub-assemblies of the assembly appearing immediately above them.
• Parts with "◉" indicates the Service parts.

• Parts with "• •" are component parts or sub-assembly with "•" appearing immediately above them.

FIG. 14 CLEANING SECTION I

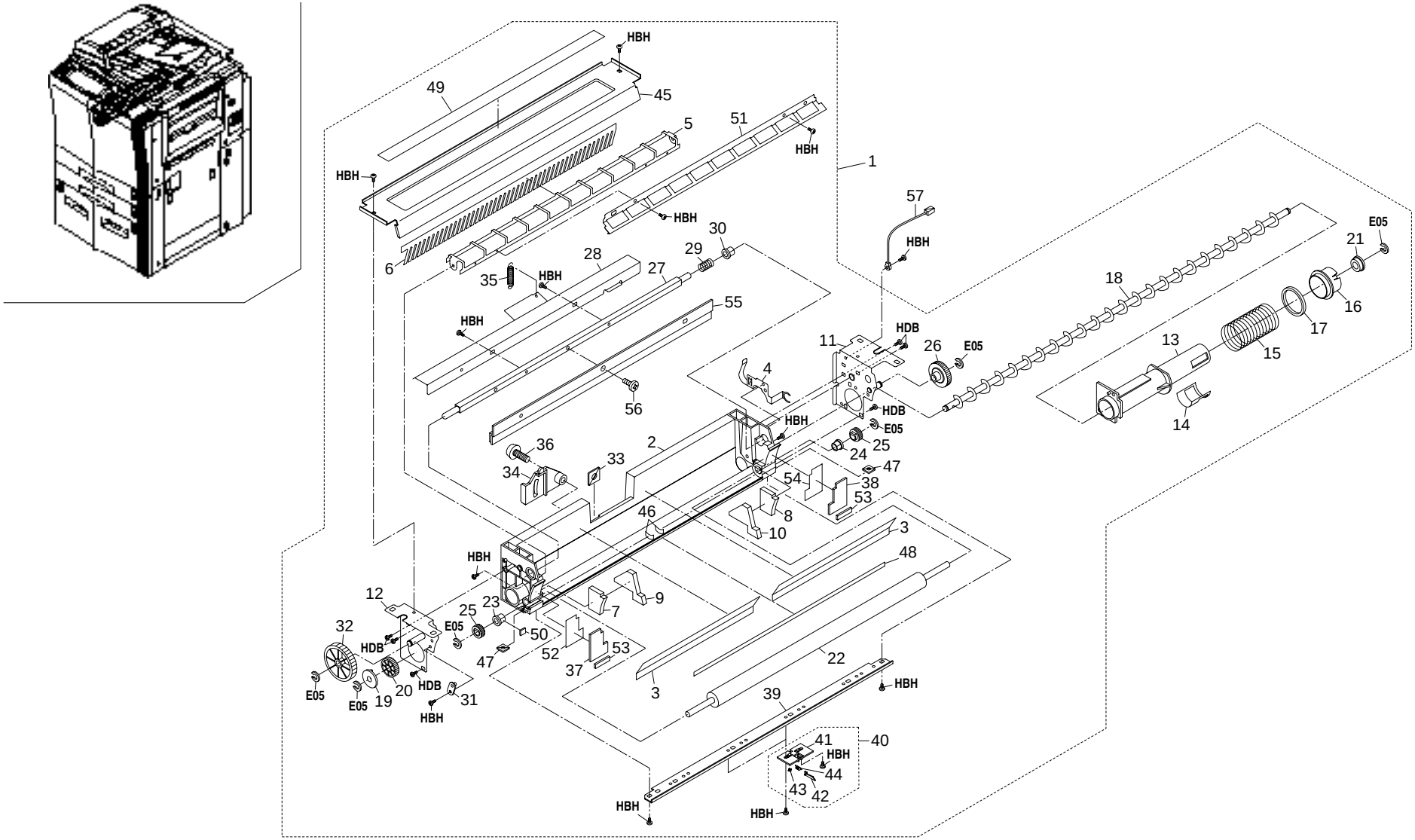

FIG. 14 CLEANING SECTION I

2BC/2BD

SP	Ref. No.	Part. No.	Description	Quantity		
				120V	230V	240V
◉	1	2BC93050	PARTS,CLEANING ASS'Y,SP	1	1	1
	2	•2BC18010	HOUSING,CLEANING	1	1	1
◉	3	•2BC18410	FILM,CLEANING	2	2	2
	4	•2BC18180	REAR GROUND PLATE,CLEANING	1	1	1
	5	•2BC18220	SCRAPER,BRUSH	1	1	1
	6	•2BC18450	SCRAPER,SPIRAL	1	1	1
◉	7	•2BC18340	FRONT SPONGE,BLADE SIDE	1	1	1
◉	8	•2BC18350	REAR SPONGE,BLADE SIDE	1	1	1
◉	9	•2BC18390	FRONT SPONGE,CLEANING	1	1	1
◉	10	•2BC18400	REAR SPONGE,CLEANING	1	1	1
	11	•2BC18040	REAR FRAME,CLEANING	1	1	1
	12	•2BC18030	FRONT FRAME,CLEANING	1	1	1
	13	•2BC18240	REAR STAY,SPIRAL	1	1	1
◉	14	•2BC18440	SEAL,TONER BLOWER	1	1	1
	15	•36718150	SPRING,SHUTTER	1	1	1
	16	•2BC18230	SHUTTER,CLEANING	1	1	1
◉	17	•2BC18430	SPONGE,SHUTTER	1	1	1
	18	•2BC18170	SPIRAL,CLEANING	1	1	1
◉	19	•2AR18380	BUSHING,CLEANING	1	1	1
◉	20	•2BC18660	GEAR 23B,CLEANING SPIRAL	1	1	1
◉	21	•49028116	BUSHING 6,CLEANING UNIT	1	1	1
◉	22	•2BC18190	BRUSH,CLEANING	1	1	1
◉	23	•29717230	BUSHING 6,FEED BACK	1	1	1
◉	24	•73210450	BUSH, 6	1	1	1
◉	25	•2BC18650	GEAR 14B,FUR BRUSH	2	2	2
◉	26	•2BC18670	GEAR B,CLEANING DRIVE	1	1	1
	27	•2BC18090	SHAFT,CLEANING BLADE	1	1	1
	28	•2BC18110	PRESSING PLATE,CLEANING BLADE	1	1	1
	29	•2BC18260	SPRING,THRUST	1	1	1
◉	30	•29822140	BUSHING,DRUM SHAFT	1	1	1
◉	31	•66015220	BUSHING 6,SPACER	1	1	1
◉	32	•2BC18680	GEAR 45B,THRUST	1	1	1
	33	•2AR07180	RETAINER M4	1	1	1
	34	•2BC18100	LEVER,BLADE RELEASE	1	1	1
◉	35	•2BC18120	SPRING,CLEANING	1	1	1
	36	•2BC04510	LOWER REAR RIGHT RETAINING PIN,COVER	1	1	1
◉	37	•2BC18320	FRONT SEAL,BLADE SIDE	1	1	1
◉	38	•2BC18330	REAR SEAL,BLADE SIDE	1	1	1
◉	39	•2BC18070	LOWER SEAL,CLEANING	1	1	1
◉	40	•2BC93130	PARTS,ASS'Y SEPARATION CLAW(SP)	2	2	2
	41	••2BC18080	MOUNT BASE,SEPARATION CLAW	2	2	2
	42	••2AR18240	CLAW,SEPARATION	2	2	2
	43	••2AR18260	PULLEY,CLAW SEPARATION	2	2	2
	44	••2AR18280	SPRING,CLAW SEPARATION	2	2	2
	45	•2BC18060	COVER,CLEANING	1	1	1
	46	•2BC18470	LOWER SPONGE,FUR BRUSH	2	2	2
	47	•2AR09200	MOUNT M3A	2	2	2
◉	48	•2BC18490	LOWER SPONGE,SEAL	1	1	1
	49	•2BC05150	LABEL,UNIT REPLACEMENT	1	1	1
	50	•2BC18700	SPONGE,BRUSH BUSHING	1	1	1
	51	•2BC18750	SCRAPER B,FUR BRUSH	1	1	1
◉	52	•2BC18720	UPPER FRONT FILM,BLADE	1	1	1
	53	•2BC18770	LOWER SPONGE,LOWER SEAL	2	2	2
◉	54	•2BC18740	UPPER REAR FILM,BLADE	1	1	1
◉	55	•2BC18460	BLADE,CLEANING	1	1	1
	56	•29820110	FRONT PIN,FULCRUM	1	1	1
	57	2BC27880	WIRE,CLEANING GROUND	1	1	1

• Parts with "•" are component parts or sub-assemblies of the assembly appearing immediately above them.
• Parts with "◉" indicates the Service parts.

• Parts with "• •" are component parts or sub-assembly with "•" appearing immediately above them.

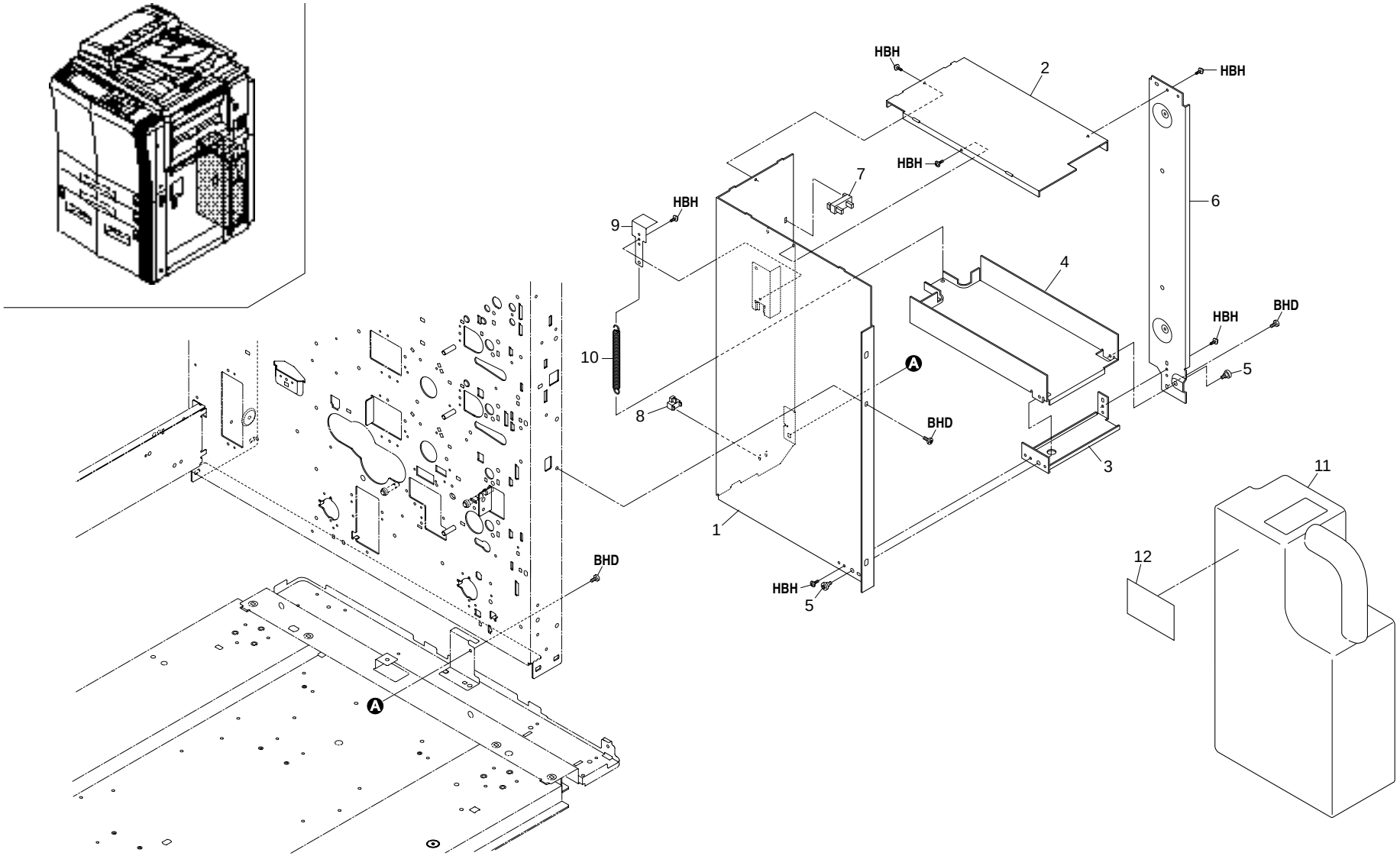
HBH
2
HBH
HBH
7
6
HBH
9
4
HBH
BHD
10
5
A
8
BHD
3
11
1
12
BHD
HBH
5
A

FIG. 15 CLEANING SECTION II

SP	Ref. No.	Part. No.	Description	Quantity		
				120V	230V	240V
	1	2BC18550	PARTITION,DISPOSAL TANK	1	1	1
	2	2BC18570	UPPER PARTITION,DISPOSAL TANK	1	1	1
	3	2BC18590	MOUNT,SUPPORT PLATE DISPOSAL TANK	1	1	1
	4	2BC18560	SUPPORT PLATE,DISPOSAL TANK	1	1	1
	5	34920170	FULCRUM PIN,FIXING	2	2	2
	6	2BC18630	REINFORCEMENT,PARTITION DISPOSAL TANK	1	1	1
◉	7	74718390	OVERFLOW SENSOR	1	1	1
◉	8	66127010	SWITCH,COVER OPEN	1	1	1
	9	2BC18640	ADJUSTING PLATE,SPRING DISPOSAL TANK	1	1	1
	10	2BC18610	SPRING,DISPOSAL TANK	1	1	1
	11	2BC60010	DISPOSAL TANK ASS'Y	1	1	1
	12	74318310	TAPE,TONER DISPOSAL TANK	1	1	1

- Parts with "•" are component parts or sub-assemblies of the assembly appearing immediately above them.
- Parts with "◉" indicates the Service parts.
- Parts with "• •" are component parts or sub-assembly with "•" appearing immediately above them.

FIG. 16 CONVEYING SECTION I

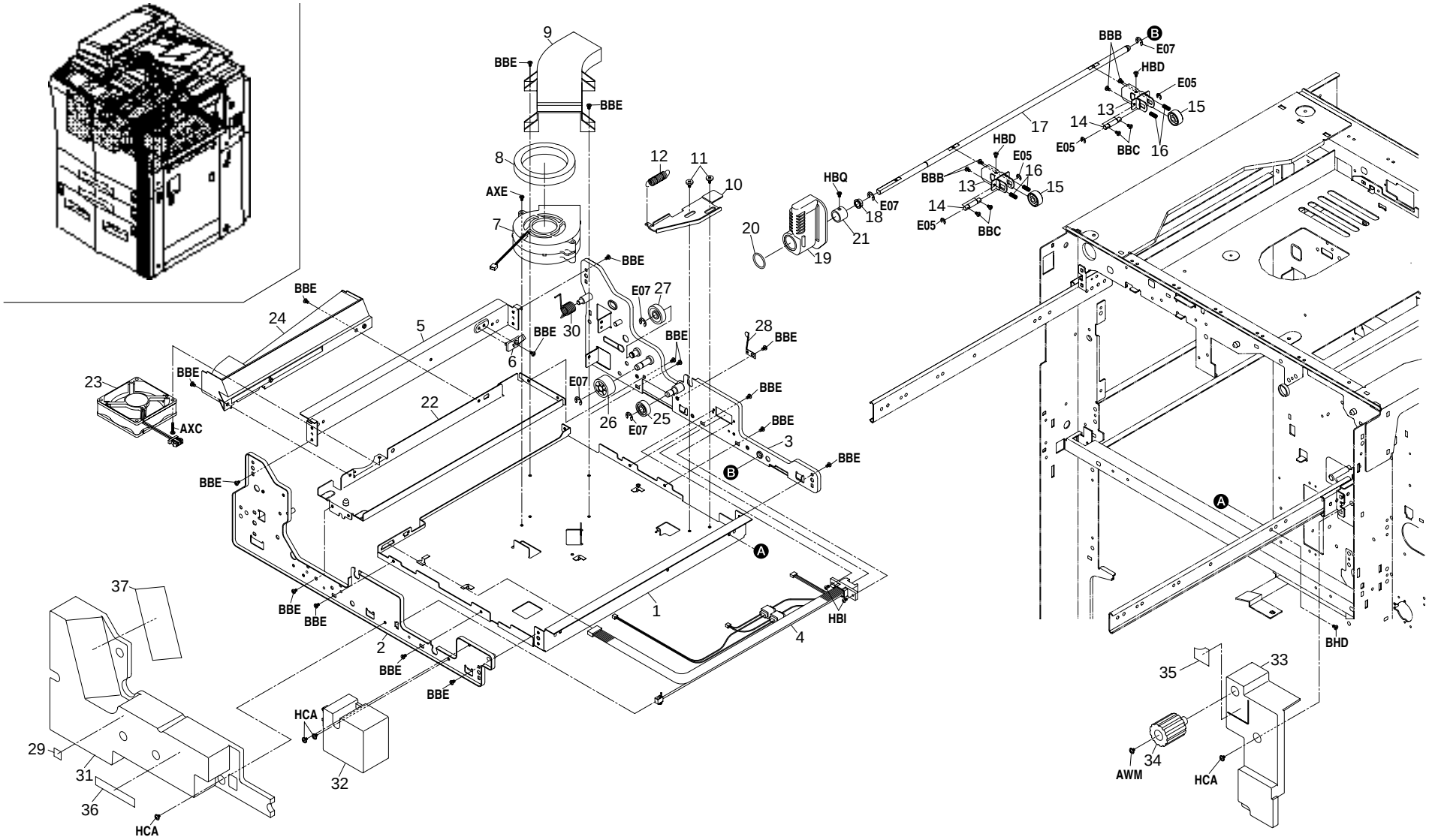

FIG. 16 CONVEYING SECTION I

SP	Ref. No.	Part. No.	Description	Quantity		
				120V	230V	240V
	1	2BC16070	BASE,CONVEYING RELEASE	1	1	1
	2	2BC16080	FRONT FRAME,CONVEYING RELEASE	1	1	1
	3	2BC16090	REAR FRAME,CONVEYING RELEASE	1	1	1
	4	2BC27370	WIRE,CONVEYING UNIT	1	1	1
	5	2BC16050	LEFT STAY,CONVEYING UNIT	1	1	1
	6	2BC20250	STOPPER,FIXING EJECT GUIDE	1	1	1
◉	7	2AC16180	FAN,CONVEYING	1	1	1
◉	8	2BC16270	SPACER,CONVEYING FAN	1	1	1
	9	2BC16300	DUCT,CONVEYING BLOWER	1	1	1
	10	2BC16180	HOOK,TRANSFER RELEASE	1	1	1
	11	71802210	PIN,DRUM LIFT	2	2	2
	12	2BC16490	SPRING,CONVEYING RELEASE	1	1	1
	13	2BC16170	SUPPORT PLATE,TRANSFER RELEASE	2	2	2
	14	36716110	SHAFT,RELEASE PULLEY	2	2	2
◉	15	48927324	PULLEY,CLEANING UNIT	2	2	2
	16	36716330	SPRING,TRANSFER PRESSING	4	4	4
	17	2BC16160	SHAFT,TRANSFER RELEASE	1	1	1
◉	18	67322230	BUSHING 8	1	1	1
◉	19	36716031	HANDLE,CONVEYING	1	1	1
◉	20	2BC05120	LABEL 2,JAM RELEASE	1	1	1
	21	36716600	SPACER,CONVEYING HANDLE	1	1	1
	22	2BC16040	MOUNT,FIXING UNIT	1	1	1
◉	23	2BC27780	FAN,FIXING	1	1	1
	24	2BC20500	LOWER DUCT,FIXING EJECT	1	1	1
◉	25	45729403	GEAR 19,S.B	1	1	1
◉	26	33921140	GEAR 26,EJECT DRIVE	1	1	1
◉	27	72622050	GEAR 25,FEED LOOP	1	1	1
◉	28	68721840	GROUND PLATE,DUPLEX	1	1	1
◉	29	2BC05110	LABEL 1,JAM RELEASE	1	1	1
	30	2BC20470	SPRING,FIXING EJECT DAMPER	1	1	1
◉	31	2BC04220	LEFT COVER,CONVEYING	1	1	1
◉	32	2BC04210	RIGHT COVER,CONVEYING	1	1	1
◉	33	2BC04200	RIGHT INNER COVER	1	1	1
◉	34	2BC06590	DIAL,FEED	1	1	1
◉	35	2BC05130	LABEL 3,JAM RELEASE	1	1	1
◉	36	2A005060	LABEL,HIGH VOLTAGE CAUTION(EUR)	1	1	1
◉	37	2BC05070	LABEL,HIGH TEMPERATURE CAUTION	1	1	1

- Parts with "•" are component parts or sub-assemblies of the assembly appearing immediately above them.
- Parts with "◉" indicates the Service parts.
- Parts with "• •" are component parts or sub-assembly with "•" appearing immediately above them.

SERVICE INFORMATION

No. P-2BC-002
02/04/17

MODEL: KM-4530/5530

SUBJECT: Corection of Parts List

DETAILS:

The following parts has been corrected in Parts List .
Use this item number when placing orders.

FIG.16 CONVEYING SECTION I

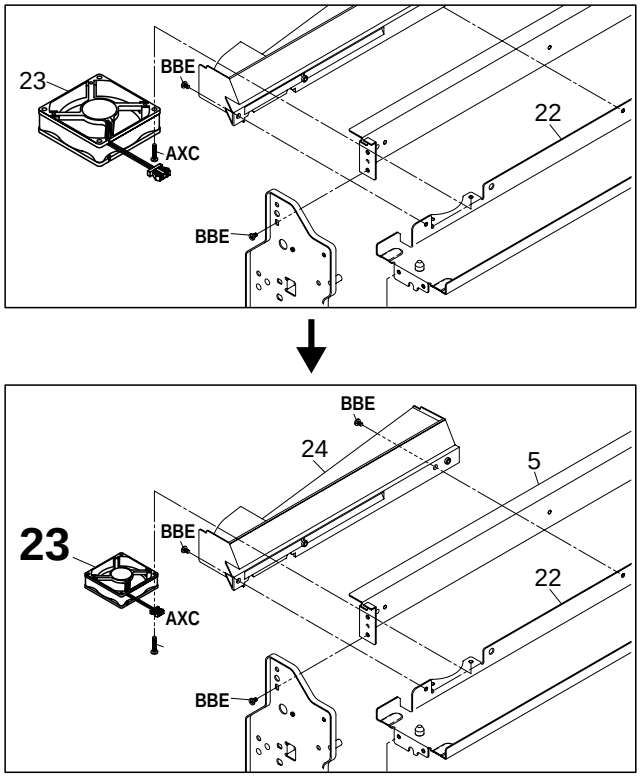

FIG.16 CONVEYING SECTION I

SP	Ref.	Part.No.	Description	Qty 120	230	240
◉	23	2BC27780	FAN,FIXING	1	1	1
◉	**23**	**2BC27790**	**FAN,COOLING**	**1**	**1**	**1**

FIG. 17 CONVEYING SECTION II

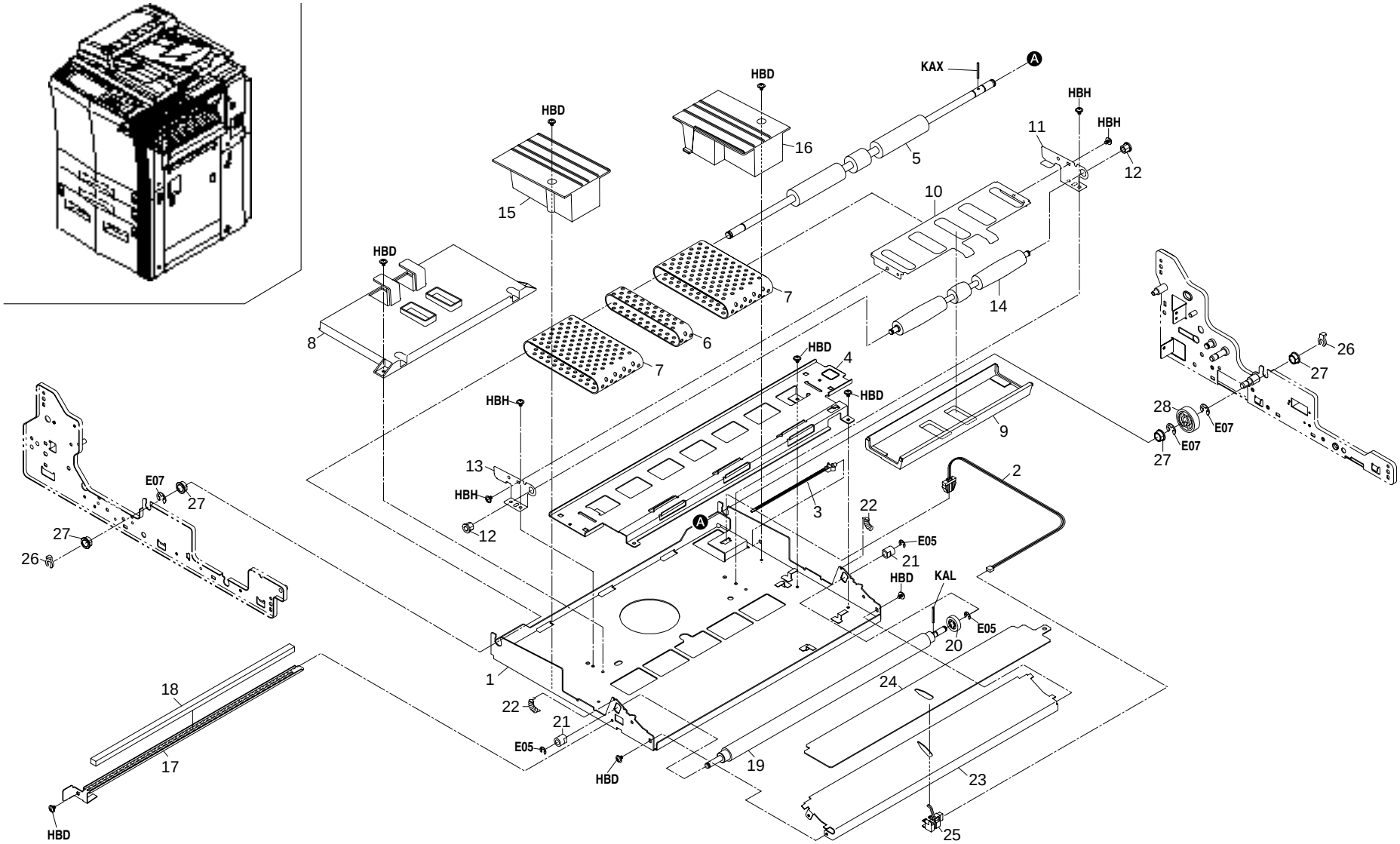

FIG. 17 CONVEYING SECTION II

SP	Ref. No.	Part. No.	Description	Quantity		
				120V	230V	240V
	1	2BC16010	BASE,CONVEYING UNIT	1	1	1
	2	2BC27360	JUNCTION WIRING,REGISTRATION	1	1	1
	3	M2107120	BINDING BAND SG-130	1	1	1
	4	2BC16100	LOWER STAY,TRANSFER	1	1	1
◉	5	2BC16120	ROLLER,CONVEYING	1	1	1
◉	6	2BC16480	BELT B,CONVEYING MIDDLE	1	1	1
◉	7	2BC16130	BELT,CONVEYING	2	2	2
	8	2BC16230	DUCT,CONVEYING JUNCTION	1	1	1
	9	2BC16240	DUCT,CONVEYING INHALATION	1	1	1
	10	2BC16210	GUIDE,CONVEYING	1	1	1
	11	2BC16260	REAR RETAINER,INHALATION DUCT	1	1	1
◉	12	29806810	BUSHING,6 REGISTRATION	2	2	2
	13	2BC16250	FRONT RETAINER,INHALATION DUCT	1	1	1
◉	14	2BC16110	ROLLER,CONVEYING IDLE	1	1	1
	15	2BC16200	FRONT GUIDE,CONVEYING	1	1	1
	16	2BC16220	REAR GUIDE,CONVEYING	1	1	1
◉	17	2BC16290	LOWER MOUNT,REGISTRATION CLEANER	1	1	1
◉	18	34817240	LOWER CLEANER,REGISTRATION	1	1	1
◉	19	2AC06300	LOWER ROLLER,REGISTRATION	1	1	1
◉	20	66006810	GEAR,16 BYPASS PULLEY	1	1	1
◉	21	72107160	BUSHING 6,LOWER REGISTRATION ROLLER	2	2	2
	22	77706461	PRESSING SPRING	2	2	2
	23	2BC16060	LOWER GUIDE,REGISTRATION	1	1	1
	24	2BC16190	FILM,REGISTRATION	1	1	1
◉	25	2BC27010	SWITCH,CONVEYING	1	1	1
◉	26	33973300	STOPPER 7,CARTRIDGE	2	2	2
◉	27	67322230	BUSHING 8	4	4	4
◉	28	45727303	GEAR 26,CLUTCH	1	1	1

• Parts with "•" are component parts or sub-assemblies of the assembly appearing immediately above them.
• Parts with "◉" indicates the Service parts.

• Parts with "• •" are component parts or sub-assembly with "•" appearing immediately above them.

FIG. 18 CONVEYING SECTION III

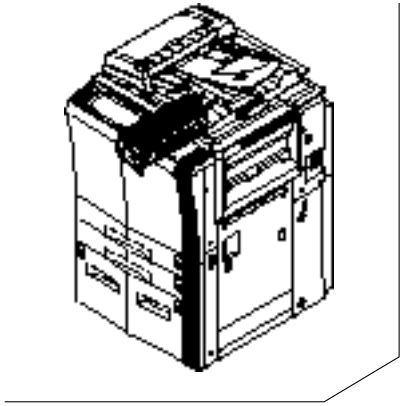

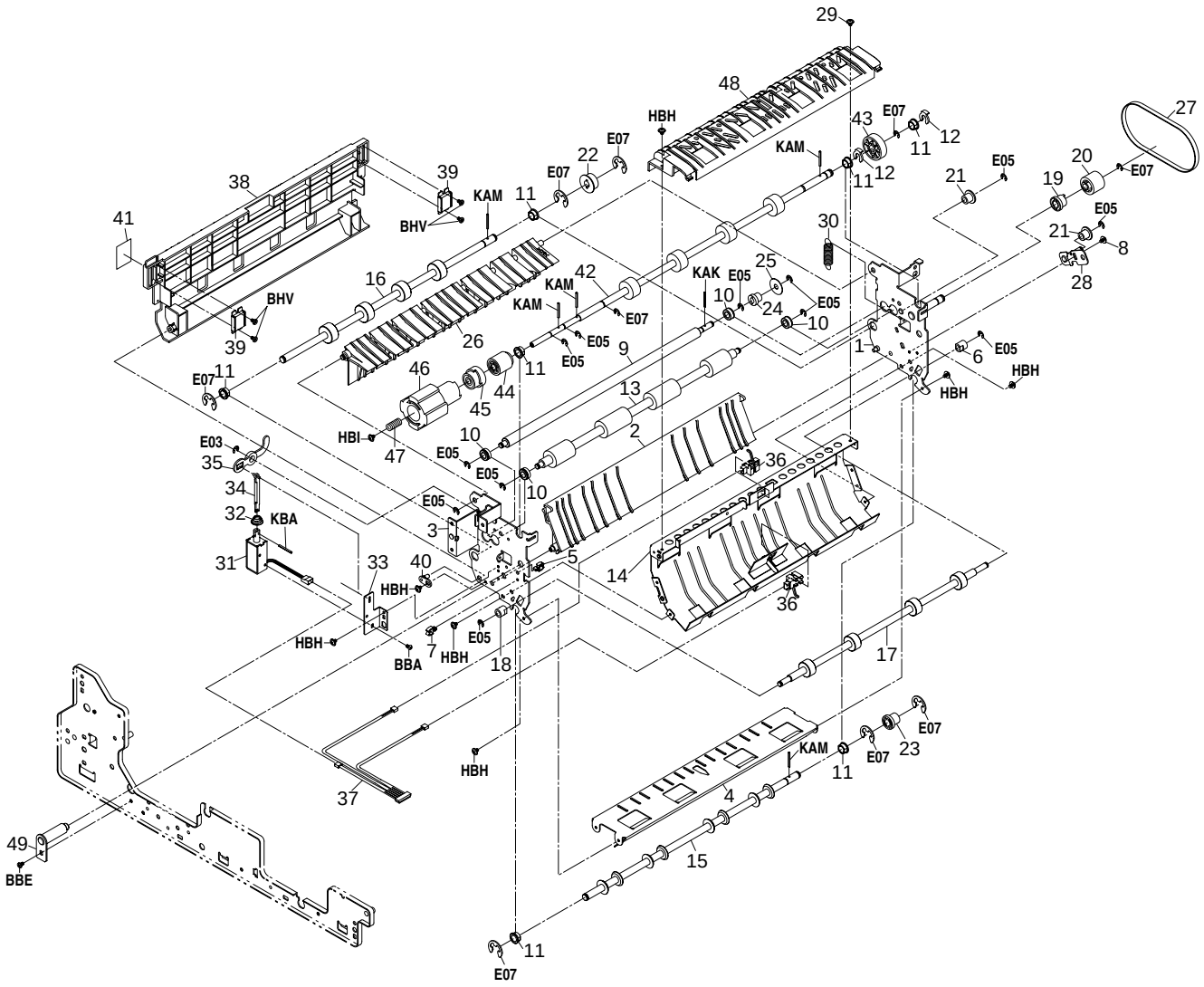

FIG. 18 CONVEYING SECTION III

SP	Ref. No.	Part. No.	Description	Quantity		
				120V	230V	240V
	1	2BC21220	REAR FRAME,FEED SHIFT	1	1	1
	2	2BC21320	LEFT GUIDE,FEED SHIFT MIDDLE	1	1	1
	3	2BC21210	FRONT FRAME,FEED SHIFT	1	1	1
	4	2BC21330	LOWER LEFT GUIDE,FEED SHIFT	1	1	1
	5	M2104260	EDGING,EDS-0607U(KITAGAWA)	1	1	1
◉	6	72107160	BUSHING 6,LOWER REGISTRATION ROLLER	1	1	1
	7	M2105740	MINIATURE CLAMP,UAMS-05S-2	1	1	1
	8	72918050	PIN,BLADE ARM	1	1	1
◉	9	2BC21240	LEFT ROLLER,FEED SHIFT	1	1	1
◉	10	74808080	BEARING,686ZZNR	4	4	4
◉	11	67322230	BUSHING 8	7	7	7
◉	12	33973300	STOPPER 7,CARTRIDGE	2	2	2
◉	13	2BC93100	PARTS,ROLLER,FEED SHIFT(SP)	1	1	1
	14	2BC21310	LOWER RIGHT GUIDE,FEED SHIFT	1	1	1
◉	15	2BC21250	LOWER RIGHT ROLLER,FEED SHIFT	1	1	1
◉	16	2BC21260	RIGHT ROLLER,TURN OVER FEED	1	1	1
◉	17	2BC21370	UPPER LEFT ROLLER,FEED SHIFT	1	1	1
◉	18	72107760	BUSHING 6,REGISTRATION ROLLER	1	1	1
◉	19	2AC21650	PULLEY 22,FEED SHIFT	1	1	1
◉	20	2BC21440	GEAR,FIXING EJECT DRIVE	1	1	1
◉	21	18308260	PULLEY,CONVEYING BELT	2	2	2
◉	22	78918320	PULLEY 30	1	1	1
◉	23	2BC21420	PULLEY 20,SWITCH BACK	1	1	1
◉	24	35911520	PULLEY 16,ADF	1	1	1
	25	34922530	COLLAR,PULLEY	1	1	1
	26	2BC21270	GUIDE,FEED SHIFT	1	1	1
◉	27	2BC21350	BELT,FEED SHIFT	1	1	1
	28	2BC21390	TENSION PLATE,FEED SHIFT	1	1	1
	29	60116080	PIN RAIL DEV.	1	1	1
	30	72418140	SPRING, BLADE	1	1	1
◉	31	18327130	SOLENOID,STOPPER	1	1	1
	32	73226040	SPRING,REVERSE SOLENOID	1	1	1
	33	2BC21450	MOUNT,FEED SHIFT SOLENOID	1	1	1
	34	68720120	LEVER B,FEED SHIFT SOLENOID	1	1	1
	35	2AC21630	LEVER A,FEED SHIFT SOLENOID	1	1	1
◉	36	2BL27410	SWITCH CONVEYING	2	2	2
	37	2BC27540	JUNCTION WIRING,FEED SHIFT	1	1	1
	38	2BC21340	RIGHT GUIDE,TURN OVER	1	1	1
	39	62207620	MAGNET, FEED SHIFT	2	2	2
	40	63202120	SUPPORT PLATE,COVER	1	1	1
	41	2BC05180	LABEL,FEED SHIFT RELEASE	1	1	1
◉	42	2BC21470	ROLLER B,FIXING EJECT	1	1	1
◉	43	36720390	GEAR,FIXING EJECT JOINT	1	1	1
◉	44	3AK20130	GEAR,WORM MAIN TRAY	1	1	1
◉	45	33920320	JOINT,FIXING DRIVE	1	1	1
◉	46	33920310	DIAL,FIXING DRIVE	1	1	1
	47	33920330	SPRING,FIXING DRIVE	1	1	1
	48	2BC21290	LOWER GUIDE,FEED SHIFT	1	1	1
	49	2BC21430	FULCRUM PIN,FEED SHIFT	1	1	1

• Parts with "•" are component parts or sub-assemblies of the assembly appearing immediately above them.
• Parts with "◉" indicates the Service parts.

• Parts with "• •" are component parts or sub-assembly with "•" appearing immediately above them.

FIG. 19 FIXING SECTION

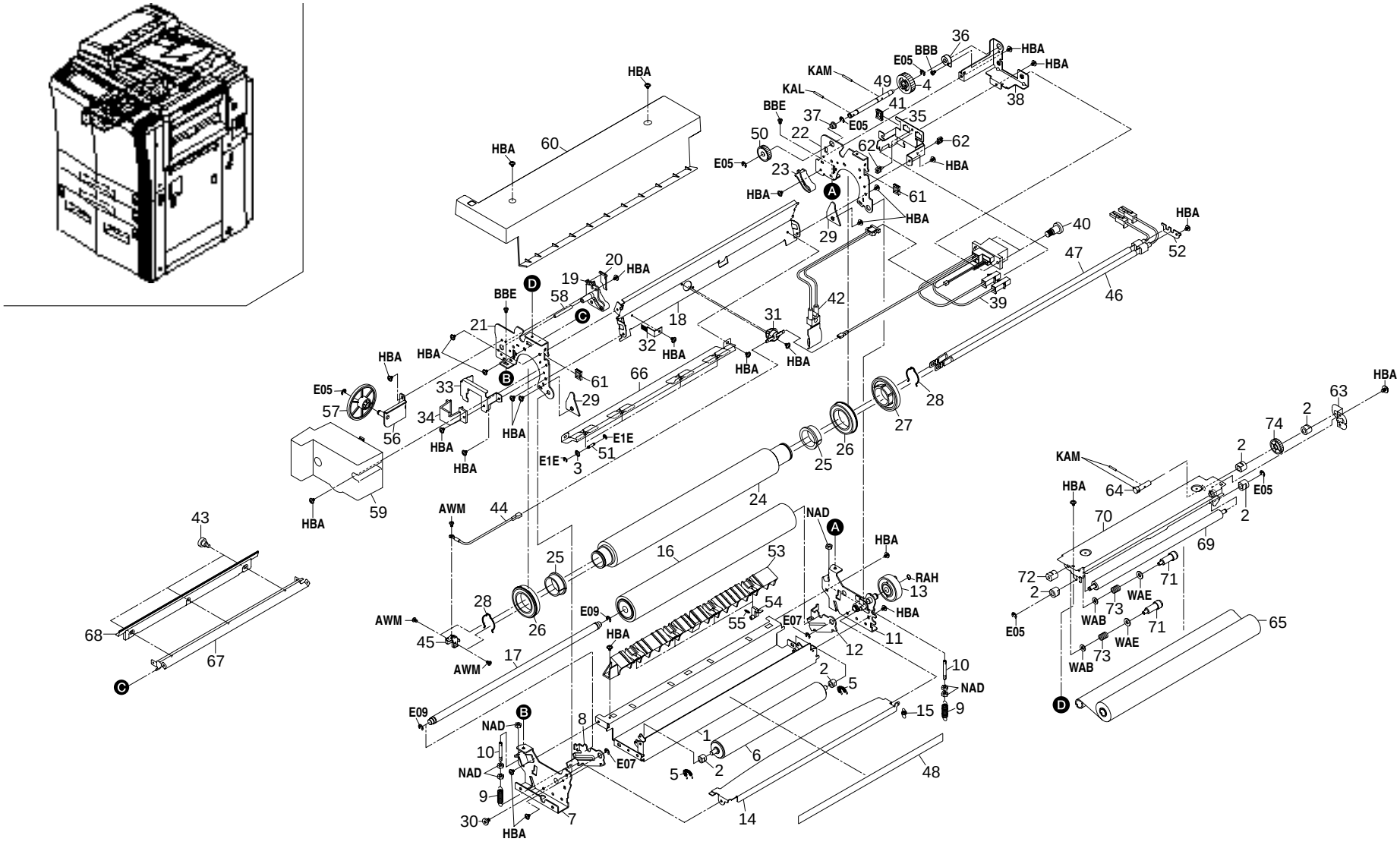

FIG. 19 FIXING SECTION

SP	Ref. No.	Part. No.	Description	Quantity		
				120V	230V	240V
◉		2BC93070	PARTS 120,ASS'Y FIXING,SP	1		
◉		2BC93080	PARTS 230,ASS'Y FIXING,SP		1	1
	1	•2BC20050	BASE,FIXING	1	1	1
◉	2	•61720460	BUSH,FIXING CLEANING	6	6	6
◉	3	•62218020	RATCHET,SEPARATION	4	4	4
◉	4	•66022131	GEAR 30,DEVELOPING DRIVE	1	1	1
	5	•29717220	PRESSING SPRING B,SB	2	2	2
◉	6	•2A020340	LOWER ROLLER,CLEANING	1	1	1
	7	•2BC20030	LOWER FRONT FRAME,FIXING	1	1	1
	8	•2BC20080	FRONT LEVER,PRESSURE	1	1	1
	9	•2A020370	SPRING,PRESSURE	2	2	2
	10	•33920190	BOLT,PRESSURE	2	2	2
	11	•2BC20040	LOWER REAR FRAME,FIXING	1	1	1
	12	•2BC20090	REAR LEVER,PRESSURE	1	1	1
◉	13	•2BC20360	GEAR,FIXING JOINT	1	1	1
	14	•2BC20560	LOWER FRONT GUIDE,FIXING	1	1	1
	15	•2BC20510	SPRING,FIXING GUIDE	1	1	1
◉	16	•2BC20260	PRESS ROLLER	1	1	1
	17	•33920170	SHAFT,PRESSURE ROLLER	1	1	1
	18	•2BC20060	STAY,FIXING	1	1	1
	19	•2BC20130	FRONT GUIDE,FIXING SEPARATION CLAW AUXIL	1	1	1
	20	•2BC20220	LEVER,SEPARATION CLAW THRUST	1	1	1
	21	•2BC20010	UPPER FRONT FRAME,FIXING	1	1	1
	22	•2BC20020	UPPER REAR FRAME,FIXING	1	1	1
	23	•2BC20140	REAR GUIDE,FIXING SEPARATION CLAW AUXILI	1	1	1
◉	24	•2BC20530	ROLLER,HEAT	1	1	1
◉	25	•33420220	BUSHING,HEAT ROLLER	2	2	2
◉	26	•33420210	BEARING,HEAT ROLLER	2	2	2
◉	27	•33920140	GEAR,HEAT ROLLER	1	1	1
	28	•2BL20200	STOPPER HEAT ROLLER	2	2	2
	29	•33920580	STOPPER,HEAT ROLLER	2	2	2
	30	•48129208	PIN,TENSION	1	1	1
◉	31	•33920800	THERMOSTAT 150,FIXING(B)	1	1	1
◉	32	•75720070	STATIC ELIMINATOR HEAT ROLLER	1	1	1
	33	•2BC20330	FRONT SUPPORT PLATE,HEATER	1	1	1
	34	•2BC20450	FRONT HOLDER,HEATER	1	1	1
	35	•2BC20340	REAR SUPPORT PLATE,HEATER	1	1	1
	36	•66222140	BUSHING,BYPASS CAM	1	1	1
◉	37	•73210450	BUSH, 6	1	1	1
	38	•2BC20160	MOUNT,FIXING DRAWER	1	1	1
	39	•2BC27380	WIRE,FIXING UNIT	1	1	1
	40	•2BC20520	PIN,FIXING DRAWER	2	2	2
	41	•M2104210	EDGING,EDS-2	1	1	1
◉	42	•2BC20430	THERMISTOR,FIXING	1	1	1
	43	•29820420	PIN,BEARING	3	3	3
	44	•2BC27620	JUNCTION WIRING,THERMOSTAT	1	1	1
◉	45	•2BC20440	FRONT TERMINAL,HEATER	1	1	1
◉	46	•2BC20290	HEATER M,FIXING(120)	1		
◉	46	•2BC20310	HEATER M,FIXING(220 - 240)		1	1
◉	47	•2BC20300	HEATER S,FIXING(120)	1		
◉	47	•2BC20320	HEATER S,FIXING(220 - 240)		1	1
	48	•2BC05150	LABEL,UNIT REPLACEMENT	1	1	1
	49	•2BC20690	SHAFT B,FIXING CLEANING DRIVE	1	1	1
◉	50	•2BC20730	GEAR B,FIXING CLEANING DRIVE	1	1	1
	51	•2BC20750	UPPER FRONT SHAFT,FIXING GUIDE	4	4	4
	52	•2BC20460	REAR RETAINER,HEATER	1	1	1
	53	•2BC20070	LOWER GUIDE,FIXING EJECT	1	1	1
◉	54	•36720493	CLAW,PRESS ROLLER	4	4	4
	55	•68320310	SPRING,SEPARATION CLAW	4	4	4
	56	•2BC20230	MOUNT,THRUST GEAR	1	1	1
◉	57	•2BC20200	GEAR,SEPARATION CLAW THRUST	1	1	1
	58	•2BC20210	PIN,SEPARATION CLAW THRUST	1	1	1
◉	59	•2BC20370	FRONT COVER,FIXING	1	1	1
◉	60	•2BC20350	UPPER COVER,FIXING	1	1	1
	61	•M2104260	EDGING,EDS-0607U(KITAGAWA)	2	2	2
	62	•M2105740	MINIATURE CLAMP,UAMS-05S-2	2	2	2
	63	•2BC20670	RETAINER,FIXING CLEANING GEAR	1	1	1
	64	•2BC20680	SHAFT A,FIXING CLEANING DRIVE	1	1	1
◉	65	•2A020330	FELT,CLEANING	1	1	1
	66	•2BC20570	UPPER FRONT GUIDE,FIXING	1	1	1
	67	•2BC20580	LEFT STAY,FIXING	1	1	1
	68	•2BC20590	LEFT COVER,FIXING	1	1	1
◉	69	•2BC20600	ROLLER,PRESSING CLEANING	1	1	1
	70	•2BC20610	SUPPORT PLATE,FIXING CLEANING	1	1	1
	71	•2BC20620	PIN A,FIXING CLEANING RETAINING	2	2	2
	72	•2BC20630	PIN B,FIXING CLEANING RETAINING	1	1	1
	73	•2BC20650	SPRING,FIXING CLEANING DRIVE	2	2	2
◉	74	•2BC20660	GEAR,FIXING CLEANING DRIVE	1	1	1

• Parts with "•" are component parts or sub-assemblies of the assembly appearing immediately above them.
• Parts with "◉" indicates the Service parts.

• Parts with "• •" are component parts or sub-assembly with "•" appearing immediately above them.

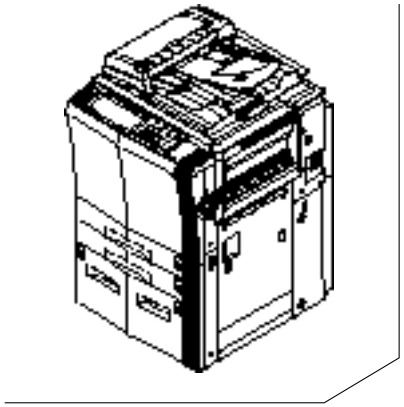

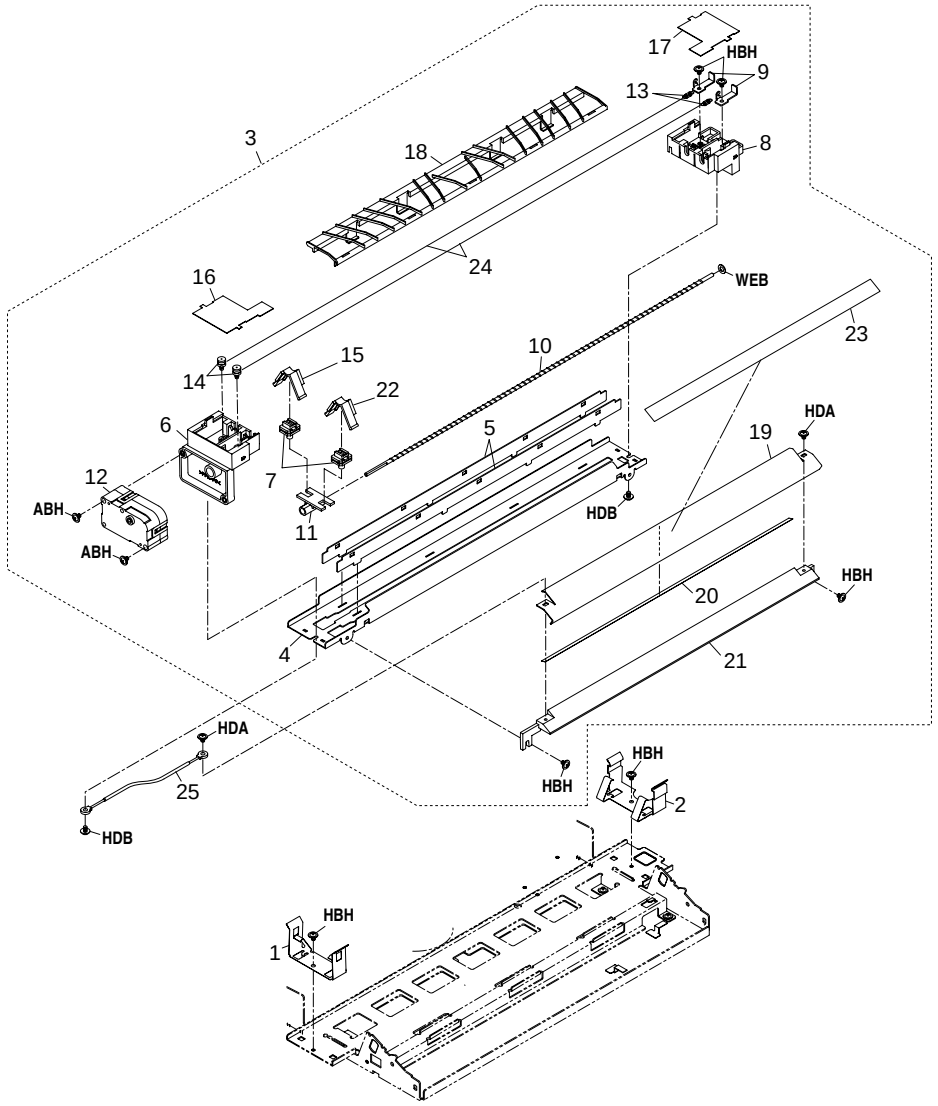
17
HBH
9
13
8
3
18
24
16
WEB
23
10
15
14
22
6
5
19
HDA
12
7
HDB
ABH
11
ABH
HBH
20
4
21
HDA
HBH
25
HBH
2
HDB
HBH
1

FIG. 20 TRANSFER SECTION

SP	Ref. No.	Part. No.	Description	Quantity		
				120V	230V	240V
◉	1	2BC17260	FRONT PLATE SPRING,TRANSFER	1	1	1
◉	2	2BC17270	REAR PLATE SPRING,TRANSFER	1	1	1
◉	3	2BC93020	PARTS,ASS'Y TRANSFER CHARGER,SP	1	1	1
	4	•2BC17010	SHIELD,TRANSFER	1	1	1
	5	•2BC17020	PARTITION,TRANSFER SHIELD	2	2	2
	6	•2BC17030	FRONT HOUSING,TRANSFER	1	1	1
	7	•33917230	SLIDER,TRANSFER CLEANING	2	2	2
	8	•2BC17040	REAR HOUSING,TRANSFER	1	1	1
◉	9	•2AC17060	TERMINAL,TRANSFER CHARGER	2	2	2
	10	•2A010081	SPIRAL,CHARGER CLEANING	1	1	1
	11	•33917211	WORK PLATE,CLEANING SLIDER	1	1	1
◉	12	•2AC16190	UNIT,CLEANING MOTOR	1	1	1
◉	13	•48527200	SPRING,CHARGER	2	2	2
◉	14	•33910230	PIN CHARGER	2	2	2
◉	15	•33900940	CLEANING PAD ASS'Y	1	1	1
	16	•2BC17090	FRONT LID,TRANSFER	1	1	1
	17	•2BC17100	REAR LID,TRANSFER	1	1	1
	18	•2BC17050	GUIDE,SEPARATION	1	1	1
	19	•2BC17060	FRONT GUIDE,TRANSFER	1	1	1
	20	•2BC17070	FRONT FILM,TRANSFER GUIDE	1	1	1
	21	•2BC17080	FRONT MOUNT BASE,TRANSFER GUIDE	1	1	1
◉	22	•2BC93220	PARTS,TRANSFER CLEANING	1	1	1
	23	•2BC17310	FRONT SHEET,TRANSFER GUIDE	1	1	1
◉	24	•74669000	TUNGSTEN WIRE(OX) S•P (50M)	2	2	2
	25	2BC27920	FRONT RESISTOR,TRANSFER GUIDE	1	1	1

- Parts with "•" are component parts or sub-assemblies of the assembly appearing immediately above them.
- Parts with "◉" indicates the Service parts.
- Parts with "• •" are component parts or sub-assembly with "•" appearing immediately above them.

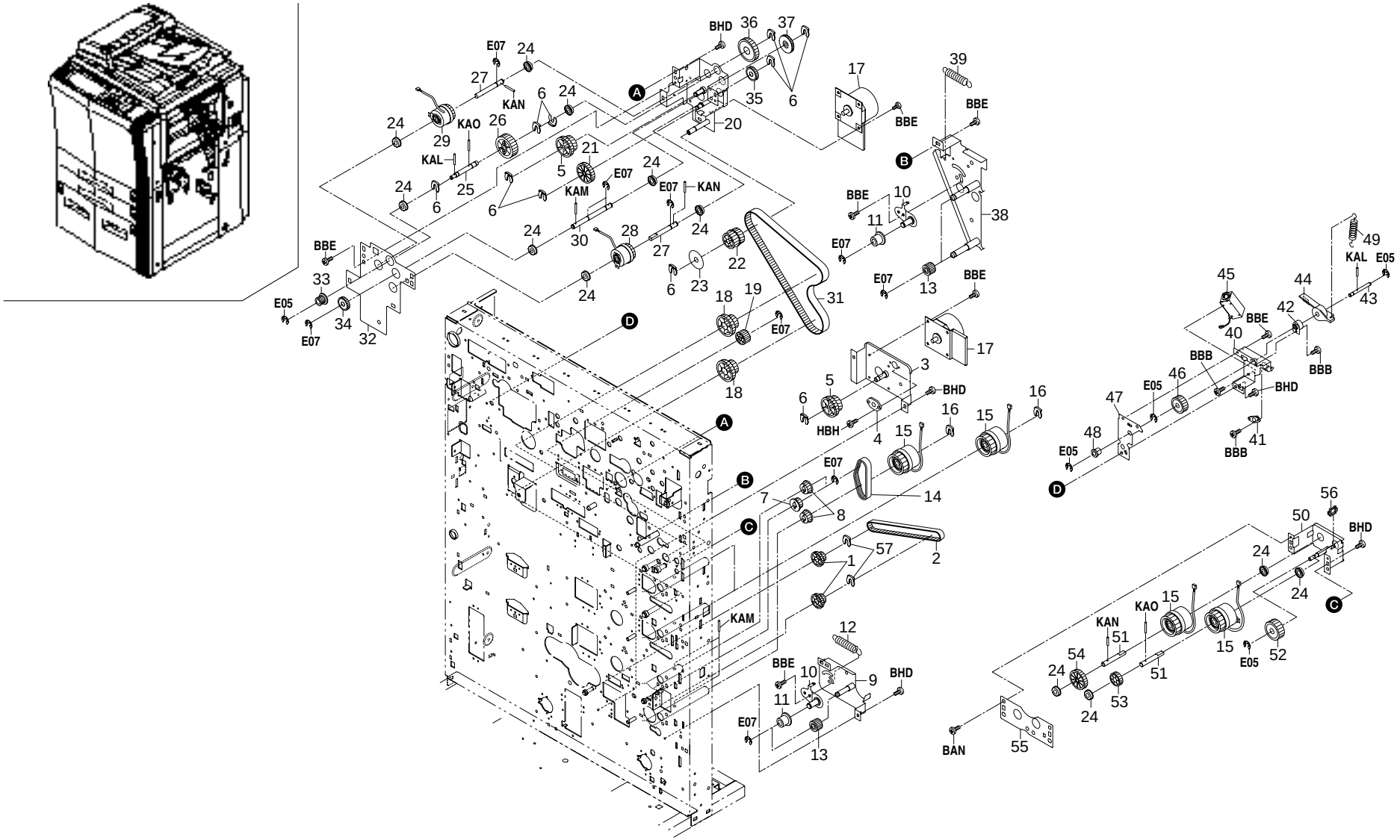
BHD
36
37
E07
24
27
KAN
6
24
A
35
6
17
39
BBE
24
KAO
29
26
20
BBE
B
KAL
25
21
5
E07
24
24
6
6
KAM
E07
KAN
BBE
10
38
24
30
28
27
24
11
E07
22
6
23
E07
13
BBE
BBE
33
E05
34
E07
32
24
18
19
31
D
E07
18
17
3
5
6
BHD
HBH
4
15
16
16
15
A
B
E07
7
8
14
C
57
1
2
KAM
12
BBE
10
9
BHD
11
E07
13
45
44
49
KAL
E05
43
BBE
42
40
BBB
BBB
46
E05
47
BHD
48
E05
41
BBB
D
56
50
BHD
24
24
C
KAO
15
KAN
51
54
15
E05
52
24
51
53
24
BAN
55

FIG. 21 DRIVING SECTION I

SP	Ref. No.	Part. No.	Description	Quantity		
				120V	230V	240V
◉	1	66008080	PULLEY,DRUM	2	2	2
◉	2	2BC22370	BELT,DECK PAPER FEED DRIVE	1	1	1
	3	2BC22340	RETAINER,DECK DRIVE	1	1	1
◉	4	33922470	BUSHING,DUPLEX DRIVE	1	1	1
◉	5	2BC22230	GEAR 49/65,FEED	2	2	2
◉	6	34806480	STOPPER 6	10	10	10
◉	7	72622130	UPPER PULLEY,CENTRAL LEAD ROLLER	1	1	1
◉	8	2BC22380	PULLEY 26,PAPER FEED	2	2	2
	9	2BC22360	RETAINER,DECK PAPER FEED DRIVE	1	1	1
	10	2BC22390	TENSION PLATE,DECK PAPER FEED DRIVE	2	2	2
◉	11	72622141	TENSION PULLEY 20	2	2	2
	12	72118141	SPRING,CLEANING BLADE	1	1	1
◉	13	36722540	GEAR 26,IDLE	3	3	3
◉	14	3AK20220	BELT,TRAY DRIVE	1	1	1
◉	15	2AC06240	CLUTCH,PAPER FEED	5	5	5
◉	16	34806150	STOPPER 5	3	3	3
◉	17	2BL27550	MOTOR SUB	2	2	2
◉	18	33922241	PULLEY 31/42,IDLE	2	2	2
◉	19	33921140	GEAR 26,EJECT DRIVE	1	1	1
	20	2BC22220	RETAINER A,FEED SHIFT DRIVE	1	1	1
◉	21	2BC22290	GEAR 68,PAPER FEED	1	1	1
◉	22	2BC22300	PULLEY 29/52,PAPER FEED DRIVE	1	1	1
	23	36723590	FLANGE 30,BELT	1	1	1
◉	24	28107400	BEARING,688ZZNR	12	12	12
	25	2BC22260	SHAFT,DEVELOPING AGITATION DRIVE	1	1	1
◉	26	33922330	GEAR 30,IDLE	1	1	1
	27	2BC22270	SHAFT A,FEED CLUTCH	2	2	2
◉	28	2BC27630	CLUTCH 34,FEED	1	1	1
◉	29	2AC06230	CLUTCH,RESISTRATION	1	1	1
	30	2BC22280	SHAFT,FEED DRIVE	1	1	1
◉	31	2BC22310	BELT,PAPER FEED DRIVE	1	1	1
	32	2BC22210	MOUNT A,FEED SHIFT DRIVE	1	1	1
◉	33	34922460	PULLEY 16	1	1	1
◉	34	71907110	GEAR 23,DUPLEX FEED PULLEY	1	1	1
◉	35	2BC22250	GEAR 27,FEED	1	1	1
◉	36	2BC22240	GEAR 42,FEED	1	1	1
◉	37	74322340	GEAR 32,DUPLEX	1	1	1
	38	2BC22320	RETAINER,PAPER FEED DRIVE	1	1	1
	39	19518260	SPRING,BLADE	1	1	1
	40	2BC20720	RETAINER,FIXING CLEANING DRIVE	1	1	1
	41	34909030	FRONT BUSHING,DRUM SHAFT	1	1	1
	42	66222140	BUSHING,BYPASS CAM	1	1	1
	43	2BC20700	SHAFT C,FIXING CLEANING DRIVE	1	1	1
	44	2A022340	LEVER,FIXING CLEANING DRIVE	1	1	1
◉	45	33906370	SOLENOID,BYPASS	1	1	1
◉	46	66018160	GEAR 19,SPIRAL ROLLER	1	1	1
	47	2BC20710	SUPPORT PLATE,FIXING CLEANING DRIVE	1	1	1
◉	48	73210450	BUSH, 6	1	1	1
	49	2AC18300	SPRING,CLEANING	1	1	1
	50	2BC22420	RETAINER B,FEED SHIFT DRIVE	1	1	1
	51	2BC22430	SHAFT B,FEED CLUTCH	2	2	2
◉	52	66018160	GEAR 19,SPIRAL ROLLER	1	1	1
◉	53	2BC22150	GEAR 24,REGISTRATION	1	1	1
◉	54	2AC22460	GEAR 40,FEED	1	1	1
	55	2BC22410	MOUNT B,FEED SHIFT DRIVE	1	1	1
	56	M2104260	EDGING,EDS-0607U(KITAGAWA)	1	1	1
◉	57	34806150	STOPPER 5	2	2	2

• Parts with "•" are component parts or sub-assemblies of the assembly appearing immediately above them.
• Parts with "◉" indicates the Service parts.

• Parts with "• •" are component parts or sub-assembly with "•" appearing immediately above them.

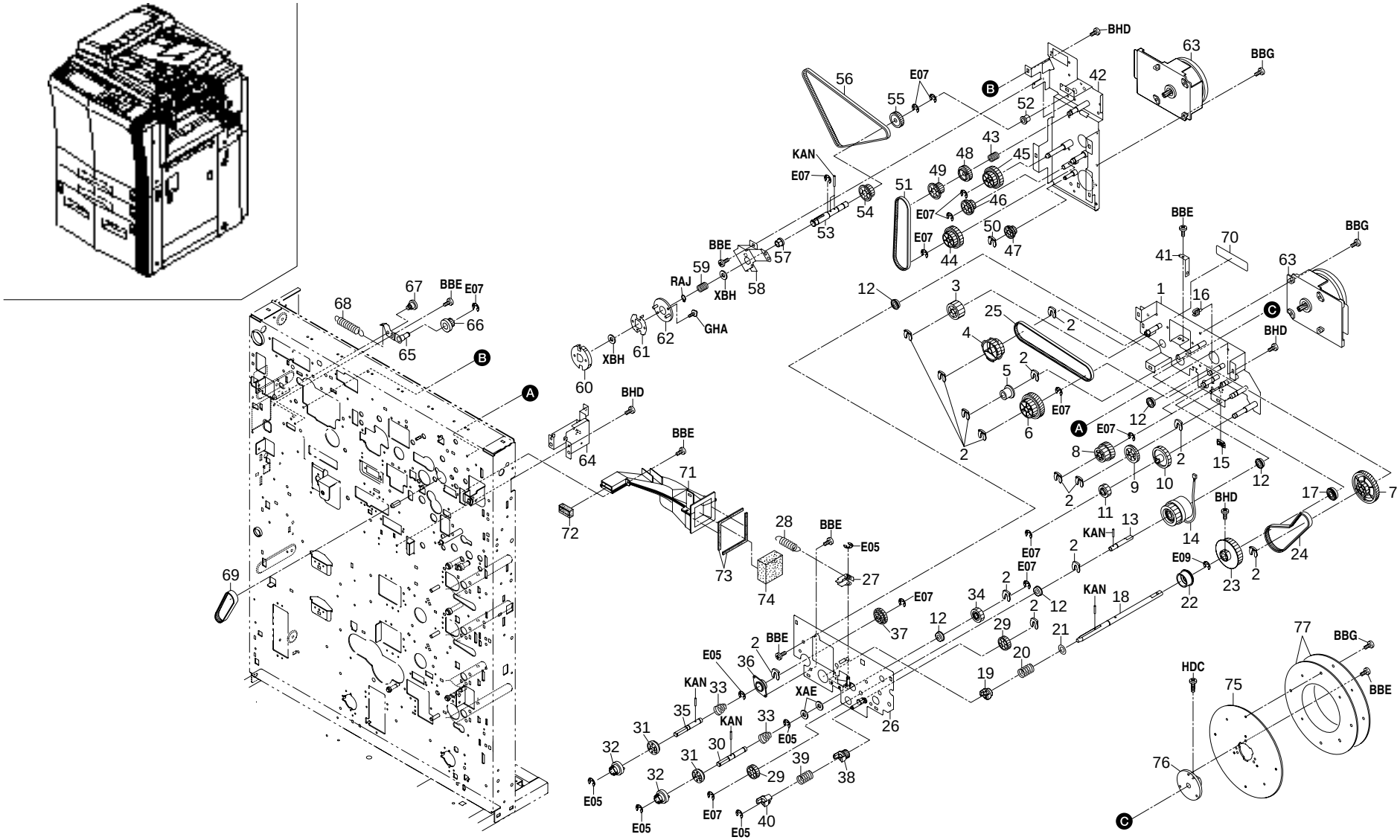
BHD
63
BBG
56
E07
55
42
52
KAN
E07
43
48
45
49
51
46
E07
54
53
E07
44
50
47
BBE
57
BBE
59
RAJ
XBH
58
GHA
67
BBE
E07
68
66
65
61
62
60
XBH
BHD
64
BBE
71
72
73
74
28
BBE
E05
27
69
E07
37
12
34
2
BBE
E05
36
KAN
33
XAE
35
KAN
33
E05
31
30
26
32
31
39
29
38
32
E05
E07
E05
40
E05
BBE
41
70
BBG
63
1
16
C
BHD
12
3
25
2
4
2
5
E07
6
2
A
E07
8
9
10
2
15
12
2
11
17
7
BHD
KAN
13
14
E07
E07
2
12
E09
23
2
24
KAN
18
22
21
20
19
77
BBG
BBE
HDC
75
76
C

FIG. 22 DRIVING SECTION II

2BC/2BD

SP	Ref. No.	Part. No.	Description	Quantity		
				120V	230V	240V
	1	2BC22020	RETAINER,IMAGE FORMATION DRIVE	1	1	1
◉	2	34806480	STOPPER 6	15	15	15
◉	3	33921140	GEAR 26,EJECT DRIVE	1	1	1
◉	4	2AC22620	PULLEY 40/28,CLEANING DRIVE	1	1	1
◉	5	71808260	PULLEY,DRUM TENSION	1	1	1
◉	6	2BC22030	PULLEY 23/84,DRUM DRIVE	1	1	1
◉	7	2AC22490	GEAR 63/35,DRUM	1	1	1
◉	8	2AC22600	GEAR 39/25,BYPASS	2	2	2
◉	9	74322340	GEAR 32,DUPLEX	1	1	1
◉	10	61722070	GEAR A,DUPLEX IDLE	1	1	1
◉	11	71807200	GEAR 20,REFEED PULLEY	1	1	1
◉	12	28107400	BEARING,688ZZNR	5	5	5
	13	2BC22100	SHAFT,REGISTRATION DRIVE	1	1	1
◉	14	2AC22170	CLUTCH 35,FEED	1	1	1
	15	M2104260	EDGING,EDS-0607U(KITAGAWA)	1	1	1
	16	M2105740	MINIATURE CLAMP,UAMS-05S-2	1	1	1
◉	17	45569005	CENTRAL BEARING	1	1	1
	18	2BC22060	SHAFT,DRUM DRIVE	1	1	1
◉	19	33922380	COUPLING,DRUM DRIVE	1	1	1
	20	2BC22070	SPRING,DRUM DRIVE	1	1	1
	21	2AC22360	COLLAR,DRUM SHAFT	1	1	1
◉	22	33922370	BUSHING,DRUM DRIVE	1	1	1
◉	23	2BC22050	PULLEY 51,DRUM	1	1	1
◉	24	2BC22040	BELT,DRUM DRIVE	1	1	1
◉	25	2BC22080	BELT,CLEANING DRIVE	1	1	1
	26	2BC22010	MOUNT,IMAGE FORMATION DRIVE	1	1	1
	27	2BC08140	HOOK,IMAGE FORMATION RETAINING	1	1	1
	28	2BC08130	SPRING,IMAGE FORMATION HOOK	1	1	1
◉	29	2BC22150	GEAR 24,REGISTRATION	2	2	2
	30	2BC22090	SHAFT,DEVELOPING DRIVE	1	1	1
◉	31	33922400	JOINT,DEVELOPING DRIVE	2	2	2
◉	32	33922390	COUPLING,DEVELOPING DRIVE	2	2	2
	33	33922460	SPRING,DEVELOPING DRIVE	2	2	2
◉	34	45729403	GEAR 19,S.B	1	1	1
	35	2BC22110	SHAFT,CLEANING DRIVE	1	1	1
	36	2BC22120	MOUNT BASE,CLEANING DRIVE	1	1	1
◉	37	45729421	GEAR 30,SEPARATION	1	1	1
◉	38	2BC22130	PULLEY 20,DEVELOPING AGITATION	1	1	1
	39	2BC22170	SPRING,DEVELOPING AGITATION	1	1	1
◉	40	2BC22140	COUPLING,DEVELOPING AGITATION	1	1	1
◉	41	2AC08160	GROUND PLATE,DRUM DRIVE	1	1	1
	42	2BC22510	RETAINER,FIXING DRIVE	1	1	1
	43	66222180	SPRING,DRUM DRIVE	1	1	1
◉	44	2BC22580	GEAR 63/32,FIXING	1	1	1
◉	45	2BC22520	GEAR 29/42,DUPLEX	1	1	1
◉	46	2BC22590	GEAR 45/30,DUPLEX	1	1	1
◉	47	72922130	GEAR 18/26	1	1	1
◉	48	2BC22550	GEAR 35,FIXING	1	1	1
◉	49	2BC22540	PULLEY 34,FIXING	1	1	1
◉	50	34806150	STOPPER 5	1	1	1
◉	51	2BC22530	BELT,FIXING DRIVE	1	1	1
◉	52	67322230	BUSHING 8	1	1	1
	53	2BC22560	SHAFT,FIXING DRIVE	1	1	1
◉	54	2AS07010	PULLEY 32,VERTICAL CONVEYING	1	1	1
◉	55	36714110	GEAR,DEVELOPING SLEEVE	1	1	1
◉	56	2BC21200	BELT,EJECT DRIVE	1	1	1
	57	49021301	BUSHING, CUTTER	1	1	1
	58	2BC22570	MOUNT,FIXING DRIVE	1	1	1
	59	73808100	SPRING, MC BRUSH	1	1	1
	60	33422301	COUPLER,DRIVE	1	1	1
	61	36723560	JUNCTION PLATE,JOINT	1	1	1
◉	62	33422290	JOINT,DRIVE	1	1	1
◉	63	2AC22500	MOTOR,MAIN	2	2	2
	64	2BC18600	LOWER MOUNT,DISPOSAL HOUSING	1	1	1
	65	2BC21460	TENSION PLATE,EJECT DRIVE	1	1	1
◉	66	63212180	PULLEY 24,EJECT	1	1	1
	67	71802210	PIN,DRUM LIFT	1	1	1
	68	72418140	SPRING, BLADE	1	1	1
◉	69	2BC22160	BELT,DEVELOPING AGITATION	1	1	1
◉	70	2A005060	LABEL,HIGH VOLTAGE CAUTION(EUR)	1	1	1
	71	2BC14130	DUCT,DEVELOPING	1	1	1
◉	72	2BC14140	SPONGE,DUCT JOINT	1	1	1
◉	73	2BC14200	SPONGE,DEVELOPING DUCT	2	2	2
◉	74	2AC14560	FILTER,DEVELOPING DUCT	1	1	1
	75	2BC22600	FLYWHEEL A	1	1	1
	76	2A022080	RETAINER,FLYWHEEL	1	1	1
	77	2BC22610	FLYWHEEL B	2	2	2

• Parts with "•" are component parts or sub-assemblies of the assembly appearing immediately above them.
• Parts with "◉" indicates the Service parts.

• Parts with "• •" are component parts or sub-assembly with "•" appearing immediately above them.

FIG. 23 DUPLEX SECTION I

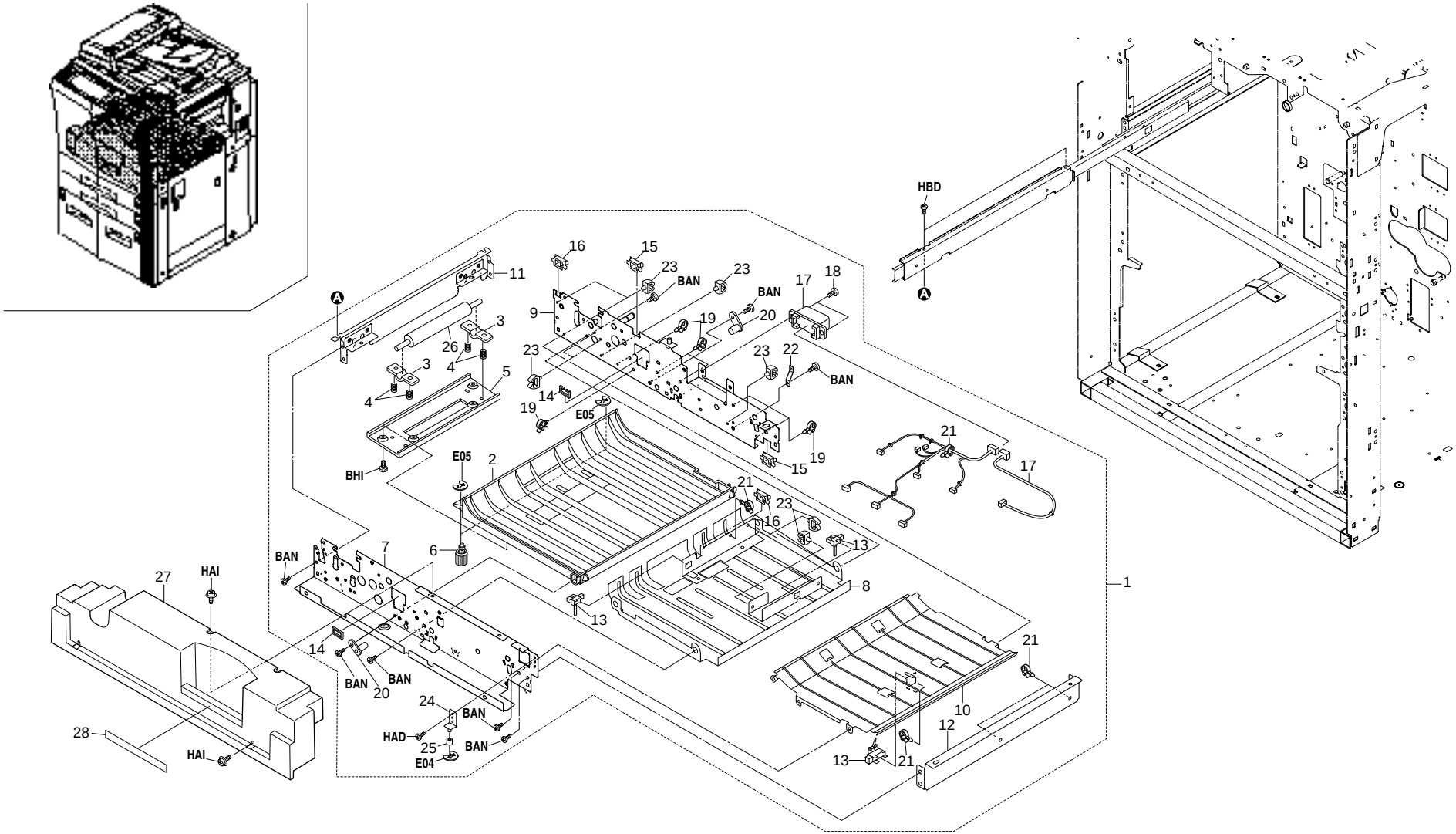

FIG. 23 DUPLEX SECTION I

SP	Ref. No.	Part. No.	Description	Quantity		
				120V	230V	240V
◉	1	2A000091	DUPLEX UNIT ASS'Y	1	1	1
	2	•2AC07231	LEFT GUIDE,DUPLEX CONVEYING	1	1	1
	3	•68721220	PRESSING PLATE,DUPLEX REGISTRATION	2	2	2
	4	•78112040	SPRING CIS	4	4	4
	5	•68721210	RETAINER,DUPLEX REGISTRATION	1	1	1
	6	•68721780	RETAINING PIN,CONVEYING	2	2	2
	7	•2A017010	FRONT FRAME,DUPLEX	1	1	1
	8	•2A017140	UPPER GUIDE,DUPLEX CONVEYING	1	1	1
	9	•2A017020	REAR FRAME,DUPLEX	1	1	1
	10	•2AC07220	RIGHT GUIDE,DUPLEX CONVEYING	1	1	1
	11	•2AC07321	LEFT SUPPORT PLATE,DUPLEX UNIT	1	1	1
	12	•2AC07330	RIGHT SUPPORT PLATE,DUPLEX UNIT	1	1	1
◉	13	•68727030	SWITCH,DUPLEX CONVEYING	3	3	3
	14	•M2104250	EDGING,EDS-17L(KITAGAWA)	2	2	2
	15	•M2104210	EDGING,EDS-2	2	2	2
	16	•M2104260	EDGING,EDS-0607U(KITAGAWA)	2	2	2
	17	•2A027400	WIRE,DUPLEX UNIT	1	1	1
	18	•72518060	PIN B,DISPOSAL TANK FULCRUM	2	2	2
	19	•M2107120	BINDING BAND SG-130	6	6	6
	20	•68721740	PIN,DUPLEX CONVEYING FULCRUM	2	2	2
	21	•M2607010	BINDING BAND,PLT1M	5	5	5
◉	22	•68721840	GROUND PLATE,DUPLEX	1	1	1
	23	•M2105740	MINIATURE CLAMP,UAMS-05S-2	8	8	8
	24	•2A017230	AUXILIARY PLATE,DUPLEX POSITION	1	1	1
	25	•28801300	BUSING, PAPER FEED	1	1	1
◉	26	•68721080	LOWER ROLLER,DUPLEX REGISTRATION	1	1	1
◉	27	2BC04460	COVER,DUPLEX UNIT	1	1	1
◉	28	2AD05060	LABEL,DUPLEX COVER	1	1	1

• Parts with "•" are component parts or sub-assemblies of the assembly appearing immediately above them.
• Parts with "◉" indicates the Service parts.

• Parts with "• •" are component parts or sub-assembly with "•" appearing immediately above them.

FIG. 24 DUPLEX SECTION II

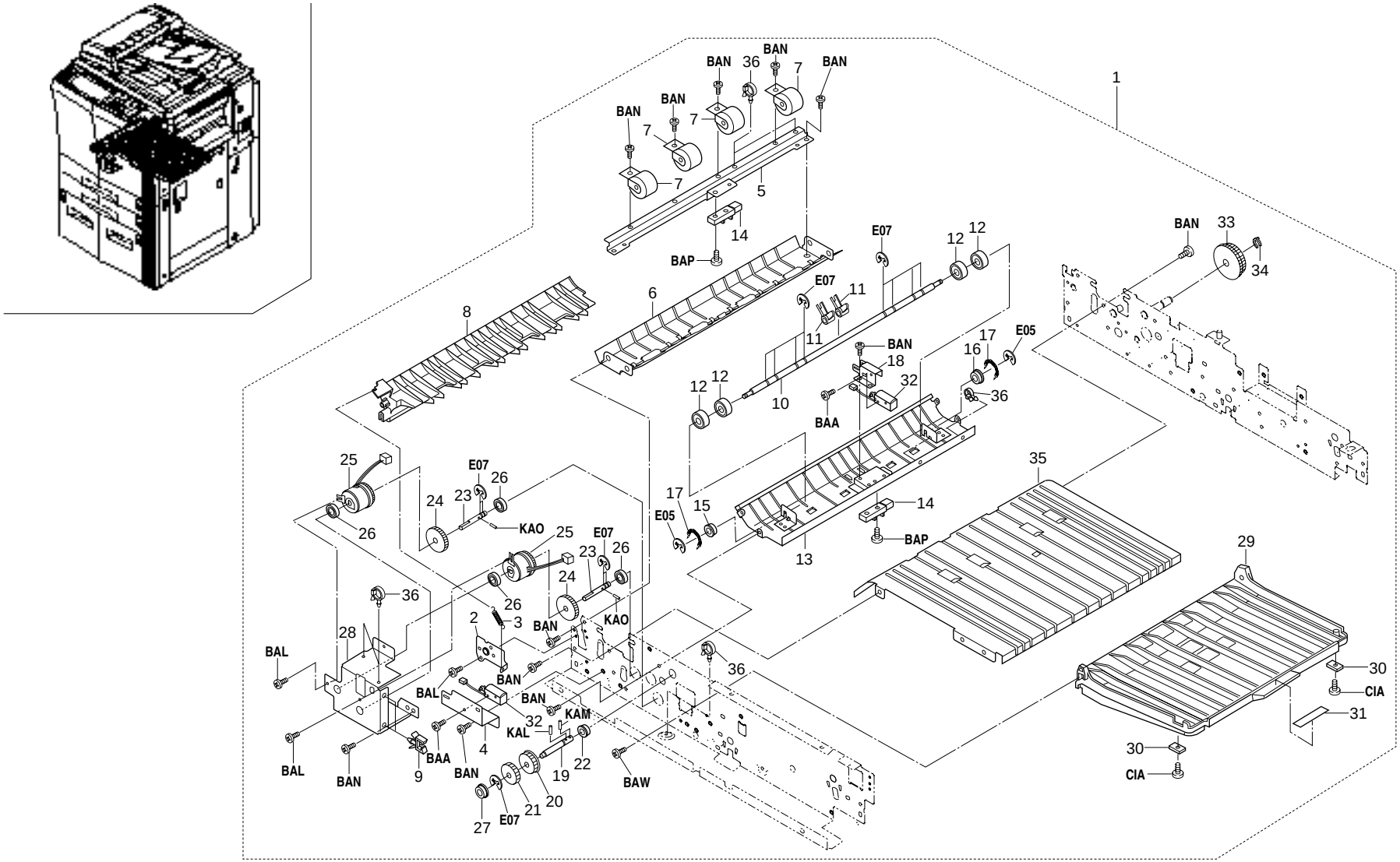

FIG. 24 DUPLEX SECTION II

SP	Ref. No.	Part. No.	Description	Quantity		
				120V	230V	240V
◉	1	2A000091	DUPLEX UNIT ASS'Y	1	1	1
	2	•2AC07120	SUPPORT PLATE,GUIDE TURN OVER FEED SHIFT	1	1	1
	3	•63213360	SPRING,PAPER EJECT HOLDER	1	1	1
	4	•2A017030	MOUNT B,FEED SHIFT SOLENOID	1	1	1
	5	•2A017070	MOUNT,REFEED PULLEY	1	1	1
	6	•2A017060	GUIDE,DUPLEX REFEED	1	1	1
◉	7	•66768200	PULLEY DUPLEX ASS'Y	4	4	4
	8	•2A017120	GUIDE,TURN OVER FEED SHIFT	1	1	1
	9	•M2105740	MINIATURE CLAMP,UAMS-05S-2	2	2	2
	10	•2A017110	SHAFT,REFEED PULLEY	1	1	1
	11	•2A017200	LEVER,SWITCHBACK RELEASE	2	2	2
◉	12	•36808230	PULLEY,ARM LARGE	4	4	4
	13	•2A017050	UPPER GUIDE,DUPLEX ADMISSION	1	1	1
◉	14	•2A027570	SWITCH,DUPLEX CONVEYING	2	2	2
◉	15	•72107760	BUSHING 6,REGISTRATION ROLLER	1	1	1
◉	16	•72107160	BUSHING 6,LOWER REGISTRATION ROLLER	1	1	1
	17	•29717150	PRESSING SPRING,FEED BACK	2	2	2
	18	•2A017210	MOUNT,SWITCHBACK RELEASE SOLENOID	1	1	1
	19	•2A017160	SHAFT,DUPLEX CONVEYING	1	1	1
◉	20	•68721630	PULLEY 40,DUPLEX CONVEYING	1	1	1
◉	21	•45727303	GEAR 26,CLUTCH	1	1	1
◉	22	•67322230	BUSHING 8	1	1	1
	23	•2A017180	SHAFT,DUPLEX CLUTCH	2	2	2
◉	24	•2AC22460	GEAR 40,FEED	2	2	2
◉	25	•2AC06240	CLUTCH,PAPER FEED	2	2	2
◉	26	•28107400	BEARING,688ZZNR	4	4	4
◉	27	•73210450	BUSH, 6	1	1	1
	28	•2A017190	MOUNT,SWITCHBACK DRIVE	1	1	1
	29	•68721771	RIGHT GUIDE,MIDDLE TRAY	1	1	1
	30	•65973030	MAGNET,CARTRIDGE	2	2	2
	31	•68705040	RIGHT LABEL,MIDDLE TRAY RELEASE	1	1	1
◉	32	•18327130	SOLENOID,STOPPER	2	2	2
◉	33	•68721600	GEAR,DUPLEX JOINT	1	1	1
◉	34	•33973300	STOPPER 7,CARTRIDGE	1	1	1
	35	•2A017040	GUIDE,MIDDLE TRAY	1	1	1
	36	•M2107120	BINDING BAND SG-130	7	7	7

• Parts with "•" are component parts or sub-assemblies of the assembly appearing immediately above them.
• Parts with "◉" indicates the Service parts.

• Parts with "• •" are component parts or sub-assembly with "•" appearing immediately above them.

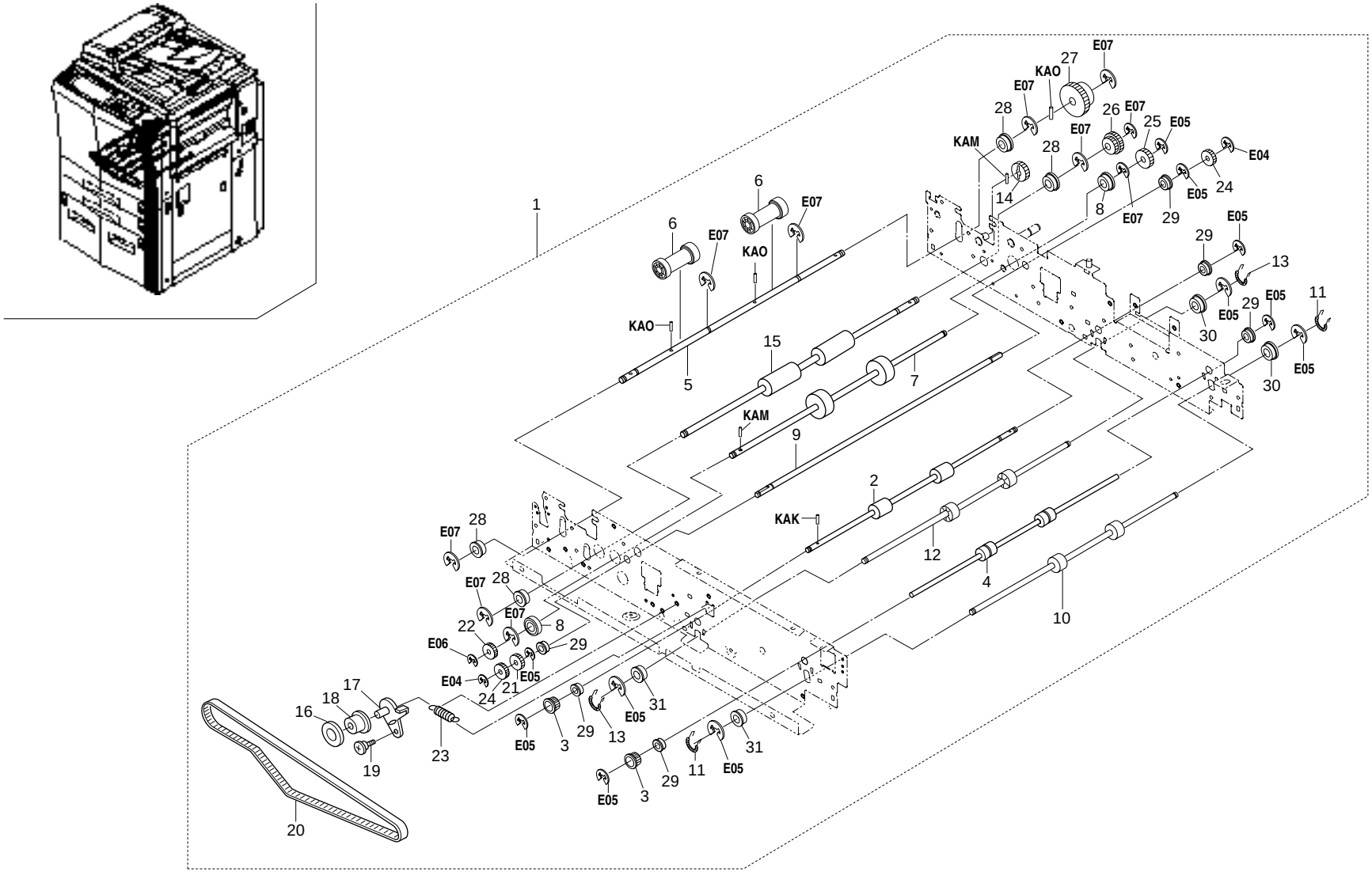
1
2
3
4
5
6
7
8
9
10
11
12
13
14
15
16
17
18
19
20
21
22
23
24
25
26
27
28
29
30
31
KAO
KAM
KAK
E04
E05
E06
E07

FIG. 25 DUPLEX SECTION III

SP	Ref. No.	Part. No.	Description	Quantity		
				120V	230V	240V
◉	1	2A000091	DUPLEX UNIT ASS'Y	1	1	1
◉	2	•68721750	ROLLER B,DUPLEX CONVEYING	1	1	1
◉	3	•68721640	PULLEY 20,DUPLEX CONVEYING	2	2	2
◉	4	•2AC07301	ROLLER C,DUPLEX CONVEYING	1	1	1
	5	•2A017100	SHAFT D,REFEED ROLLER	1	1	1
◉	6	•3AK16030	PULLEY,CONVEYING	2	2	2
◉	7	•2A017170	ROLLER,SWITCHBACK DUPLEX	1	1	1
◉	8	•28107400	BEARING,688ZZNR	2	2	2
	9	•2A017150	SHAFT D,DUPLEX DRIVE	1	1	1
◉	10	•2AC07311	LOWER ROLLER B,DUPLEX CONVEYING	1	1	1
	11	•29717220	PRESSING SPRING B,SB	2	2	2
◉	12	•2AC07210	LOWER ROLLER,DUPLEX CONVEYING	1	1	1
	13	•76007150	SPRING PAPER PAD PULLEY	2	2	2
◉	14	•45727303	GEAR 26,CLUTCH	1	1	1
◉	15	•2AC07040	UPPER ROLLER,DUPLEX REGISTRATION	1	1	1
	16	•34922530	COLLAR,PULLEY	1	1	1
	17	•68721571	TENSION PLATE,DUPLEX CONVEYING	1	1	1
◉	18	•75722252	IDLE PULLEY 15	1	1	1
	19	•48129000	PIN,ORIGINAL HOLDER	1	1	1
◉	20	•68721660	BELT 600,DUPLEX CONVEYING	1	1	1
◉	21	•68321260	GEAR 18,SWITCH BACK	1	1	1
◉	22	•45729103	GEAR 17,PF BELT ROLLER	1	1	1
	23	•68721760	SPRING,TRAILING EDGE TAPPING	1	1	1
◉	24	•72118160	GEAR 22,SPIRAL ROLLER	2	2	2
◉	25	•45728116	GEAR 28,JOINT	1	1	1
◉	26	•2AC07050	GEAR 20/30,DUPLEX REGISTRATION	1	1	1
◉	27	•45729418	DRIVE GEAR,PRE-TRANSFER	1	1	1
◉	28	•67322230	BUSHING 8	4	4	4
◉	29	•73210450	BUSH, 6	6	6	6
◉	30	•72107160	BUSHING 6,LOWER REGISTRATION ROLLER	2	2	2
◉	31	•72107760	BUSHING 6,REGISTRATION ROLLER	2	2	2

• Parts with "•" are component parts or sub-assemblies of the assembly appearing immediately above them.
• Parts with "◉" indicates the Service parts.

• Parts with "• •" are component parts or sub-assembly with "•" appearing immediately above them.

FIG. 26 EJECT SECTION

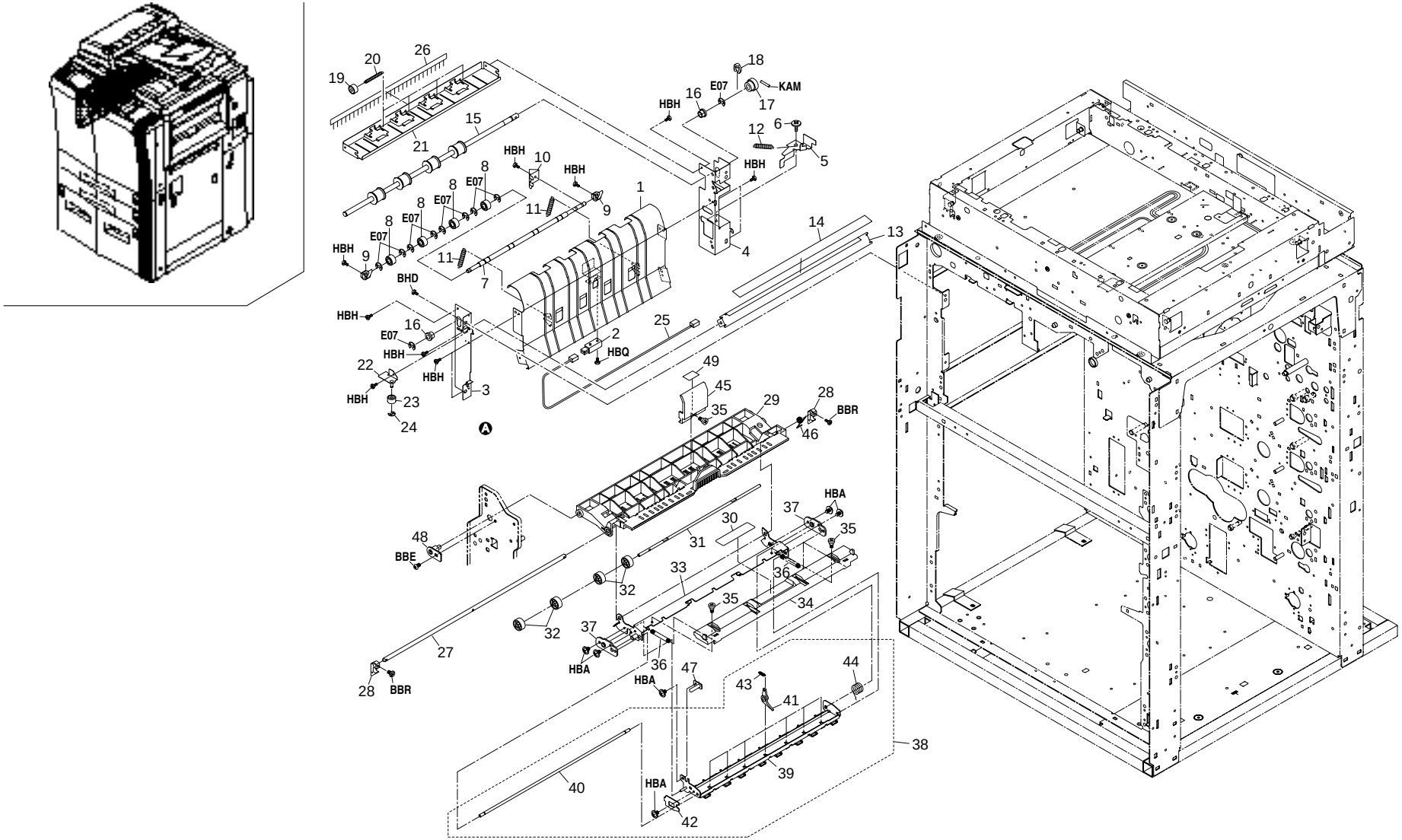

FIG. 26 EJECT SECTION

SP	Ref. No.	Part. No.	Description	Quantity		
				120V	230V	240V
	1	2BC21060	LEFT GUIDE,SWITCH BACK	1	1	1
◉	2	2BL27420	SWITCH REGISTRATION	1	1	1
	3	2BC21010	FRONT FRAME,EJECT	1	1	1
	4	2BC21020	REAR FRAME,EJECT	1	1	1
	5	2BC21140	LEVER,SWITCH BACK ROLLER RELEASE	1	1	1
	6	33918030	PIN,BLADE	1	1	1
	7	2BC21040	LEFT SHAFT,TURN OVER	1	1	1
◉	8	36808230	PULLEY,ARM LARGE	4	4	4
	9	2BC21100	LIFT PLATE,TURN OVER ROLLER RELEASE	2	2	2
	10	2BC21090	WORK PLATE,SWITCH BACK ROLLER RELEASE	1	1	1
	11	29717220	PRESSING SPRING B,SB	2	2	2
	12	48529412	SPRING,LEVER	1	1	1
	13	2BC21070	LOWER GUIDE,EJECT	1	1	1
◉	14	2BC21080	LOWER FILM,EJECT	1	1	1
◉	15	2BC21030	ROLLER,EJECT	1	1	1
◉	16	67322230	BUSHING 8	2	2	2
◉	17	65722030	PULLEY 22,FEED	1	1	1
◉	18	33973300	STOPPER 7,CARTRIDGE	1	1	1
◉	19	33421390	PULLEY,EJECT	4	4	4
	20	72907110	SPRING,PAPER GUIDE PULLEY	4	4	4
	21	2BC21050	UPPER GUIDE,EJECT	1	1	1
	22	2BC21120	MOUNT,RELEASE PULLEY	1	1	1
◉	23	66321430	FEEDBACK PULLEY	1	1	1
◉	24	65016080	STOP RING E3	1	1	1
	25	2BC27460	WIRE,EJECT	1	1	1
◉	26	2AC21250	STATIC ELIMINATOR,EJECT	1	1	1
	27	2BC20390	SHAFT,FIXING EJECT RELEASE	1	1	1
	28	33906670	RIGHT HOOK,FEED RELEASE	2	2	2
	29	2BC20170	UPPER GUIDE,FEED SHIFT	1	1	1
	30	2BC20740	SHEET,FIXING EJECT COVER	1	1	1
	31	2BC20240	SHAFT,FIXING EJECT PULLEY	1	1	1
◉	32	2BC20760	UPPER PULLEY,FIXING EJECT	4	4	4
	33	2BC20100	UPPER SUPPORT PLATE,FIXING EJECT	1	1	1
◉	34	2BC20110	UPPER COVER,FIXING EJECT	1	1	1
	35	29820420	PIN,BEARING	3	3	3
	36	2BC20490	SPRING,FIXING EJECT COVER	2	2	2
	37	2BC20120	UPPER HOLDER,FIXING EJECT	2	2	2
◉	38	2BC93090	PARTS,ASS'Y FIXING EJECT GUIDE,SP	1	1	1
	39	•2BC20150	UPPER GUIDE,FIXING EJECT	1	1	1
	40	•2BC20190	SHAFT,SEPARATION CLAW	1	1	1
◉	41	•61720750	SEPARATION CLAW B	7	7	7
	42	•2BC20380	STOPPER,SEPARATION CLAW	1	1	1
	43	•61720760	SPRING,SEPARATION CLAW	7	7	7
	44	•2BC20480	SPRING,SEPARATION CLAW THRUST	1	1	1
◉	45	2BC20400	HANDLE,FIXING EJECT RELEASE	1	1	1
	46	2BC20410	SPRING,FIXING EJECT RELEASE	1	1	1
	47	2BC20180	HOLDER,FIXING EJECT	1	1	1
	48	2BC20420	UPPER FULCRUM PIN,FEED SHIFT	1	1	1
	49	2BC05140	LABEL,FIXING EJECT RELEASE	1	1	1

• Parts with "•" are component parts or sub-assemblies of the assembly appearing immediately above them.
• Parts with "◉" indicates the Service parts.

• Parts with "• •" are component parts or sub-assembly with "•" appearing immediately above them.

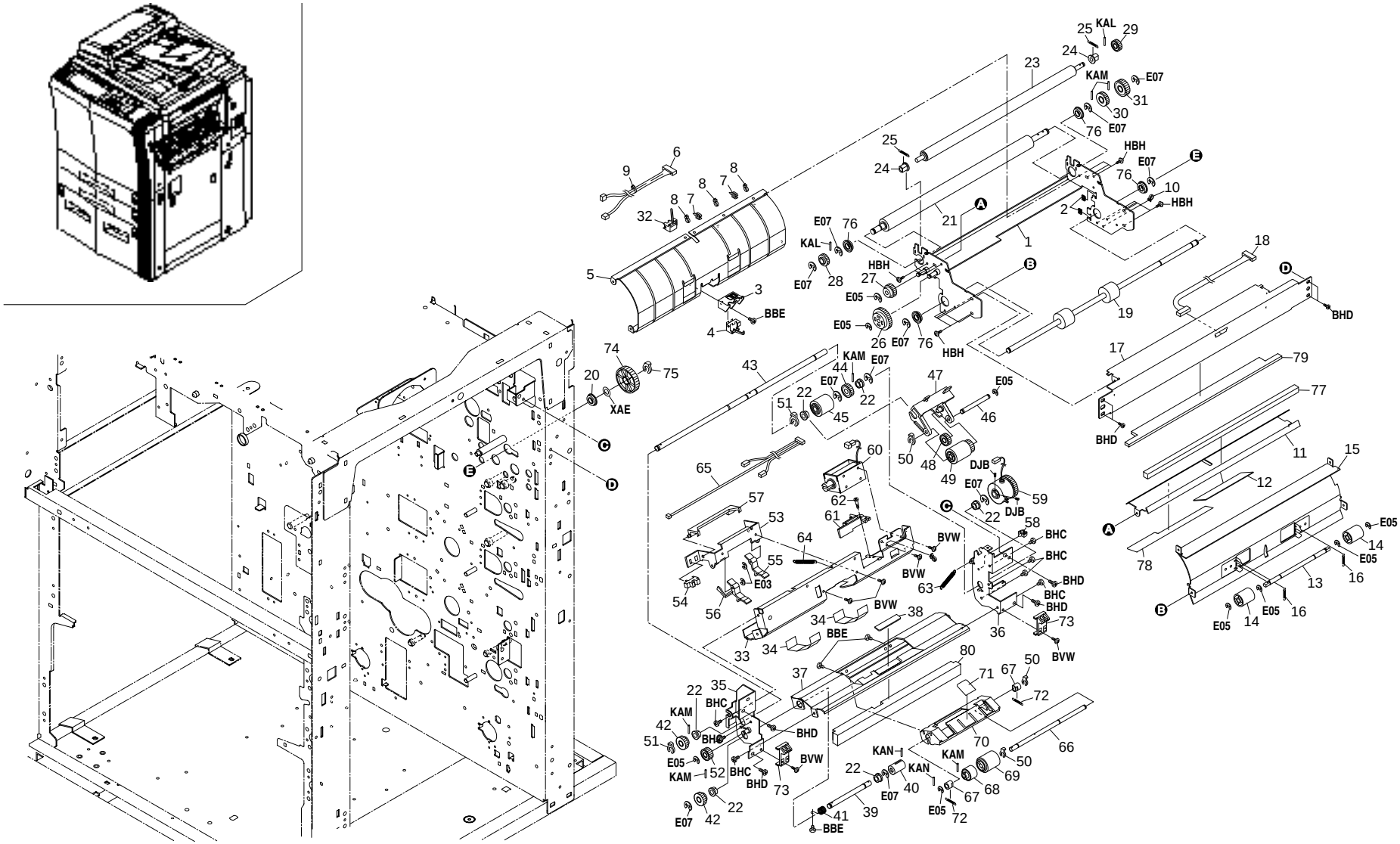
KAL
KAM
E07
HBH
BBE
XAE
BHD
DJB
BVW
BHC
E05
E03
KAN

FIG. 27 BYPASS FEED SECTION

SP	Ref. No.	Part. No.	Description	Quantity		
				120V	230V	240V
	1	2BC06250	FRAME,FEED	1	1	1
	2	M2104260	EDGING,EDS-0607U(KITAGAWA)	2	2	2
	3	33906620	MOUNT BASE,PAPER FEED SWITCH	1	1	1
◉	4	2BC27010	SWITCH,CONVEYING	1	1	1
	5	2BC06240	LOWER GUIDE,FEED	1	1	1
	6	2BC27410	WIRE A,PAPER FEED SWITCH	1	1	1
	7	M2105740	MINIATURE CLAMP,UAMS-05S-2	2	2	2
	8	M2307010	BINDING BAND,T18R	3	3	3
	9	M2107120	BINDING BAND SG-130	3	3	3
	10	M2105720	MINIATURE CLAMP,UAMS-05-2	1	1	1
	11	2BC06220	UPPER GUIDE,FEED	1	1	1
	12	2BC06290	GUIDE FILM,FEED MIDDLE	1	1	1
	13	36706150	SHAFT,FEED PULLEY	1	1	1
	14	2BC06870	PULLEY,FEED	2	2	2
	15	2BC06230	GUIDE,FEED MIDDLE	1	1	1
	16	77706461	PRESSING SPRING	2	2	2
	17	2BC06280	REINFORCEMENT,FEED	1	1	1
	18	2BC27760	JUNCTION WIRING,BYPASS	1	1	1
◉	19	2BC06260	ROLLER B,FEED	1	1	1
◉	20	33906610	BEARING,FEED	1	1	1
◉	21	2BC06270	LOWER ROLLER A,FEED	1	1	1
◉	22	67322230	BUSHING 8	6	6	6
◉	23	18506100	UPPER ROLLER A,FEED	1	1	1
◉	24	60606101	BUSHING FEED BACK ROLLER	2	2	2
	25	77706240	JOINT PAPER FEED	2	2	2
◉	26	2BC06760	GEAR,JOINT	1	1	1
◉	27	78722210	GEAR 18 EJECT	1	1	1
◉	28	29806490	GEAR 16T	1	1	1
◉	29	66006810	GEAR,16 BYPASS PULLEY	1	1	1
◉	30	45728104	GEAR 20,DEV.UNIT	1	1	1
◉	31	72622050	GEAR 25,FEED LOOP	1	1	1
	32	2BC27930	SWITCH,FEED	1	1	1
	33	33906441	UPPER GUIDE,BYPASS	1	1	1
◉	34	2AC06330	FILM,BYPASS PAPER FEED	2	2	2
	35	2BC06830	FRONT FRAME,BYPASS	1	1	1
	36	2BC06100	REAR FRAME,BYPASS	1	1	1
	37	2AC06110	LOWER GUIDE,BYPASS	1	1	1
◉	38	33906400	FRICTION PLATE,BYPASS	1	1	1
	39	33906920	SHAFT,JOINT	1	1	1
◉	40	74306520	JOINT,PULLEY DRIVE SHAFT	1	1	1
	41	33906390	SPRING,SHAFT STOPPER	1	1	1
◉	42	29814340	GEAR 18,DEVELOPER UNIT	2	2	2
	43	2BC06110	SHAFT,BYPASS PAPER FEED	1	1	1
◉	44	71815110	IDLE GEAR 18,SUB UNIT	1	1	1
◉	45	61706770	UPPER PULLEY,BYPASS	1	1	1
	46	33906950	SHAFT,LEADING FEED PULLEY BYPASS	1	1	1
	47	2AC06120	SUPPORT PLATE,LEADING FEED PULLEY BYPASS	1	1	1
◉	48	29822230	GEAR 16T,PF IDLE	1	1	1
◉	49	33906470	PULLEY,LEADING FEED	1	1	1
◉	50	63511220	STOP RING,4	3	3	3
◉	51	75706040	STOPRING PAPER FEED PULLEY	2	2	2
◉	52	29807100	GEAR 16,BYPASS	1	1	1
	53	33906941	MOUNT,STOPPER	1	1	1
◉	54	2BL27450	SWITCH PI	1	1	1
	55	2AC06160	STOPPER,PAPER	1	1	1
	56	2AC06141	LEVER,PE	1	1	1
	57	33906980	LEVER,STOPPER RELEASE	1	1	1
	58	M2505720	MINIATURE CLAMP,UAMS-05-2	1	1	1
◉	59	33906130	CLUTCH,BYPASS	1	1	1
◉	60	33906370	SOLENOID,BYPASS	1	1	1
	61	2AC06150	LEVER,BYPASS SOLENOID	1	1	1
	62	72518060	PIN B,DISPOSAL TANK FULCRUM	1	1	1
	63	63506130	SPRING,PAPER FEED	1	1	1
	64	63312120	SPRING,HOOK HAND UNIT	1	1	1
	65	2BC27450	WIRE,BYPASS PAPER FEED	1	1	1
	66	33906910	SHAFT,SEPARATION PULLEY	1	1	1
◉	67	72107160	BUSHING 6,LOWER REGISTRATION ROLLER	2	2	2
◉	68	33906430	TORQUE LIMITER,BYPASS	1	1	1
◉	69	33906060	LOWER PULLEY,PAPER FEED	1	1	1
	70	2AC06131	SUPPORT PLATE,SEPARATION PULLEY	1	1	1
◉	71	60907910	PAD,BYPASS	1	1	1
	72	29717150	PRESSING SPRING,FEED BACK	2	2	2
	73	2AC06280	STOPPER,BYPASS TABLE	2	2	2
◉	74	2AC22460	GEAR 40,FEED	1	1	1
◉	75	34806150	STOPPER 5	1	1	1
	76	60912270	BEARING,688ZZ	4	4	4
	77	2BC04560	VIBRATION INSULATOR,FEED(EUR) (KM-4530)	1	1	1
	78	2BC06940	GUIDE FILM,BYPASS PAPER FEED	1	1	1
	79	2BC04550	LOWER SPONGE,FEED(EUR) (KM-4530)	1	1	1
	80	2BC04540	UPPER SPONGE,FEED(EUR) (KM-4530)	1	1	1

• Parts with "•" are component parts or sub-assemblies of the assembly appearing immediately above them.
• Parts with "◉" indicates the Service parts.

• Parts with "• •" are component parts or sub-assembly with "•" appearing immediately above them.

FIG. 28 BYPASS & VERTICAL CONVEYING SECTION

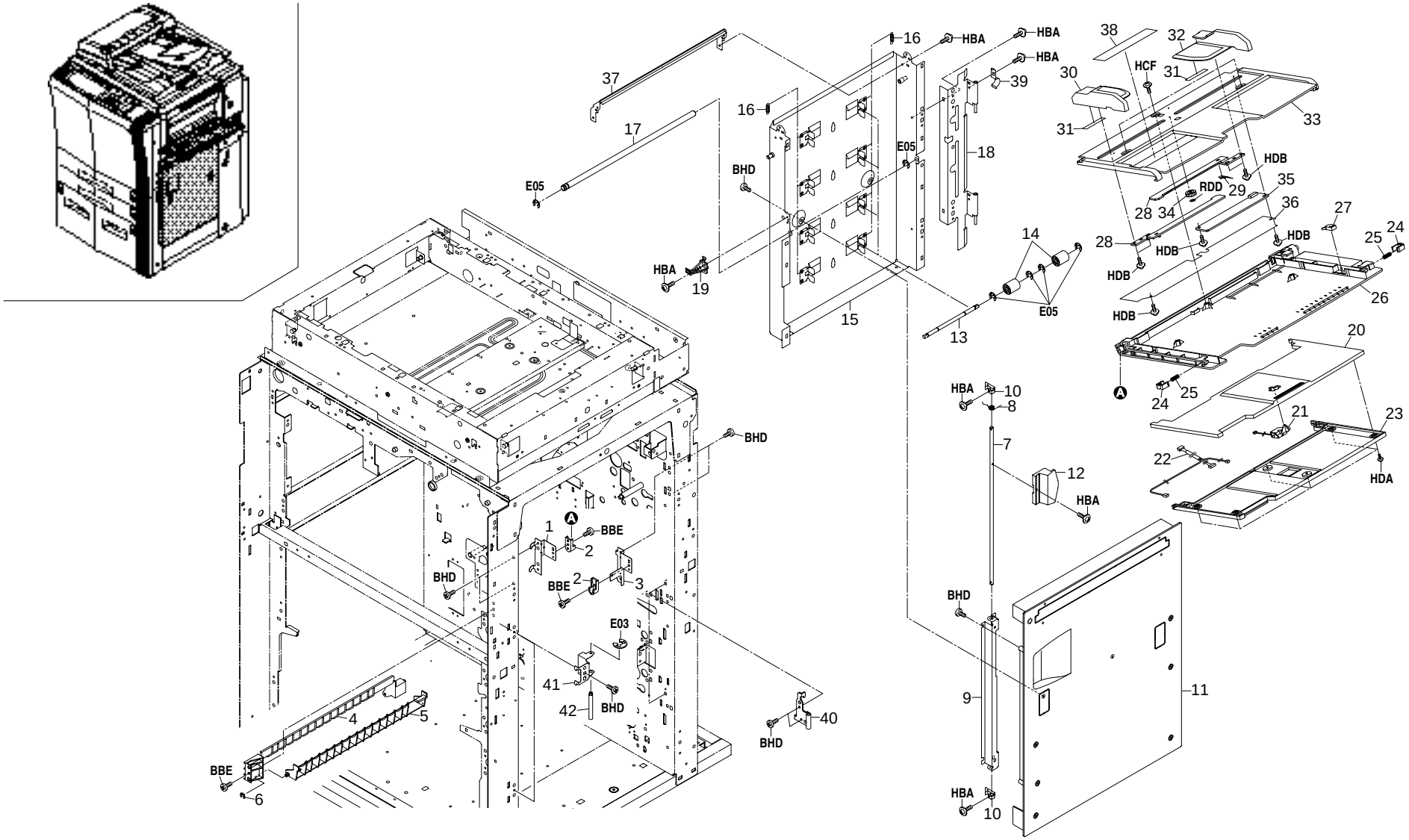

FIG. 28 BYPASS & VERTICAL CONVEYING SECTION

2BC/2BD

SP	Ref. No.	Part. No.	Description	Quantity		
				120V	230V	240V
	1	2BC06570	FRONT MOUNT,BYPASS TABLE	1	1	1
	2	2BC06620	FULCRUM PLATE,BYPASS TABLE	2	2	2
	3	2BC06580	REAR MOUNT,BYPASS TABLE	1	1	1
	4	2BC06070	UPPER GUIDE,CONFLUENCE	1	1	1
	5	2BC06080	LOWER GUIDE,CONFLUENCE	1	1	1
◉	6	5MVX111DN003	RING STOPPER	1	1	1
	7	2BC06140	RIGHT SHAFT,FEED RELEASE	1	1	1
	8	2BC06610	SPRING,VERTICAL CONVEYING HOOK	1	1	1
	9	2BC06600	MOUNT,VERTICAL CONVEYING HOOK	1	1	1
	10	33906670	RIGHT HOOK,FEED RELEASE	2	2	2
◉	11	2BC06120	COVER,VERTICAL CONVEYING	1	1	1
◉	12	2BC06160	RIGHT HANDLE,FEED RELEASE	1	1	1
	13	36706150	SHAFT,FEED PULLEY	4	4	4
◉	14	2BC06870	PULLEY,FEED	8	8	8
	15	2BC06130	GUIDE,VERTICAL CONVEYING	1	1	1
	16	77706461	PRESSING SPRING	8	8	8
	17	2BC06150	SHAFT,VERTICAL CONVEYING FULCRUM (KM-5530)	1	1	1
	18	2BC06890	HINGE B,VERTICAL CONVEYING	1	1	1
	19	2BC06480	DETECTION PLATE,HINGE INTERLOCK	1	1	1
◉	20	2BC06050	TABLE C,BYPASS	1	1	1
◉	21	33906990	SWITCH,BYPASS SIZE DETECTION	1	1	1
	22	2AC27650	WIRE,BYPASS TRAY	1	1	1
◉	23	2BC06060	TABLE D,BYPASS	1	1	1
	24	33906880	STOPPER,BYPASS TABLE	2	2	2
◉	25	63516110	SPRING,TRANSFER	2	2	2
◉	26	2BC06030	TABLE A,BYPASS	1	1	1
◉	27	76727010	ORIGINAL SIZE SWITCH	1	1	1
	28	2BC06750	RACK,CURSOR	2	2	2
	29	2BC07860	TERMINAL,PAPER SIZE DETECTION	1	1	1
◉	30	2A306020	REAR CURSOR,BYPASS	1	1	1
◉	31	33906220	PAD,BYPASS CURSOR	2	2	2
◉	32	2A306010	FRONT CURSOR,BYPASS	1	1	1
◉	33	2BC06040	TABLE B,BYPASS	1	1	1
◉	34	65914120	GEAR 18,IDLE DEVELOPING	1	1	1
◉	35	33928111	SIZE DETECTION PCB	1	1	1
	36	33906900	COVER,CURSOR	1	1	1
	37	2BC06880	STAY,VERTICAL CONVEYING	1	1	1
◉	38	18505180	ORIGINAL SIZE INDICATOR,BYPASS (INCH)	1		
◉	38	2AC05160	ORIGINAL SIZE INDICATOR,BYPASS(EUR)		1	1
	39	2BC07820	GROUND PLATE,VERTICAL CONVEYING	1	1	1
	40	2BC06470	FULCRUM PLATE,VERTICAL CONVEYING	2	2	2
	41	2BC06440	RIGHT MOUNT,FEED FULCRUM	2	2	2
	42	2BC06450	RIGHT SHAFT,FEED FULCRUM	2	2	2

• Parts with "•" are component parts or sub-assemblies of the assembly appearing immediately above them.
• Parts with "◉" indicates the Service parts.

• Parts with "• •" are component parts or sub-assembly with "•" appearing immediately above them.

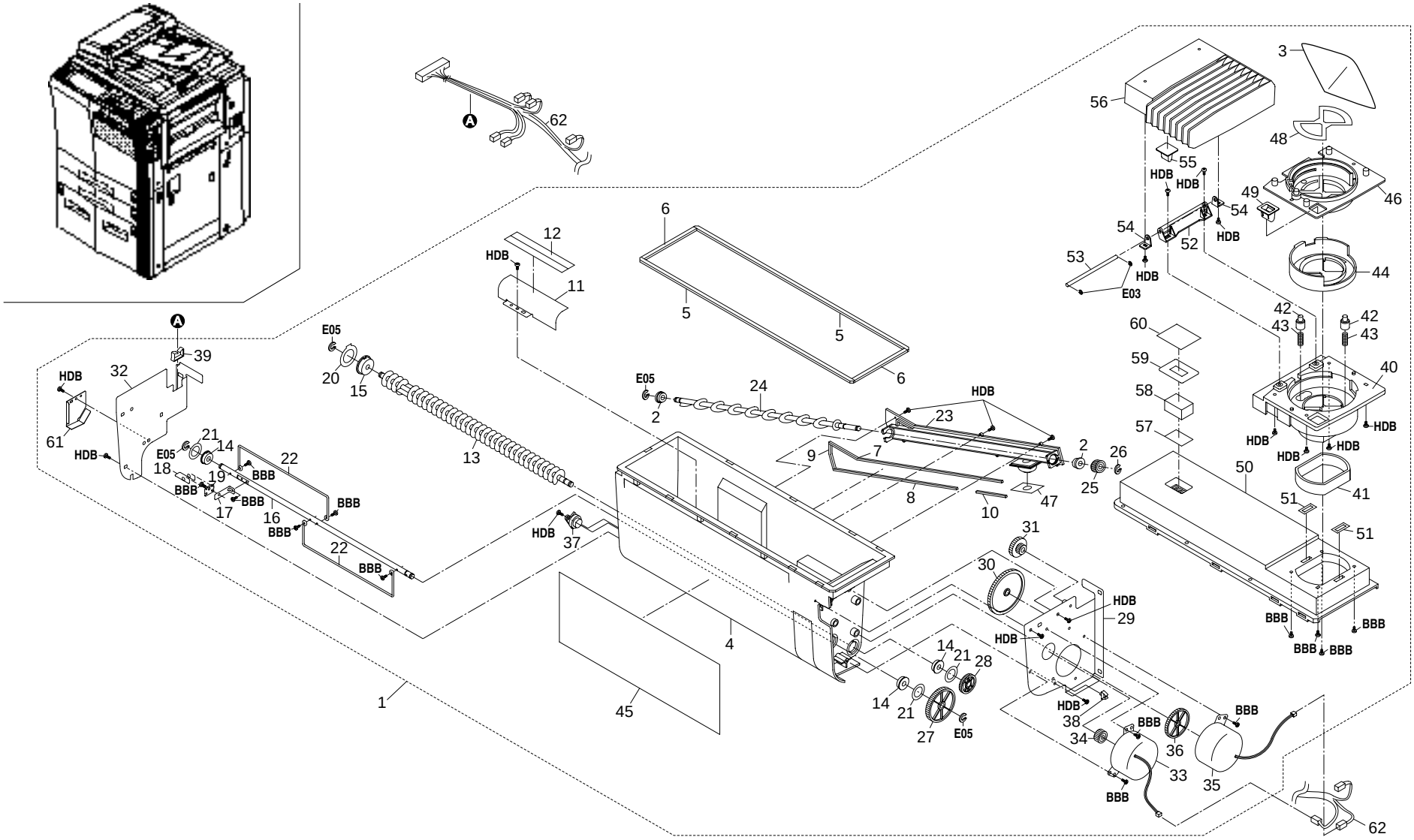
A
62
6
12
HDB
11
5
5
6
3
56
48
55
HDB
HDB
49
54
46
54
52
HDB
53
HDB
E03
44
42
43
42
43
60
59
58
57
40
HDB
HDB
HDB
HDB
50
41
51
51
BBB
BBB
BBB
BBB
A
39
HDB
32
61
HDB
E05
21
14
18
19
BBB
BBB
17
BBB
16
BBB
22
BBB
22
BBB
E05
20
15
13
E05
2
24
HDB
23
9
7
8
10
47
2
26
25
HDB
37
31
30
HDB
29
HDB
4
14
21
28
14
21
27
E05
1
45
HDB
38
34
BBB
36
BBB
33
35
BBB
62

FIG. 29 HOPPER SECTION I

2BC/2BD

SP	Ref. No.	Part. No.	Description	Quantity		
				120V	230V	240V
◉	1	2BC93110	PARTS,ASS'Y HOPPER,USA SP	1		
◉	1	2BC93120	PARTS,ASS'Y HOPPER,EUR SP		1	1
◉	2	•63814420	SEAL B,DEV. HOUSING	2	2	2
	3	•36715730	FILM,HOPPER LID	1	1	1
	4	•2BC15010	LOWER HOUSING,HOPPER	1	1	1
◉	5	•2A015080	SPONGE A,HOPPER HOUSING	2	2	2
◉	6	•2A015200	SPONGE E,HOPPER HOUSING	2	2	2
◉	7	•2BC15090	SPONGE A,TONER DRAW	1	1	1
◉	8	•2BC15110	SPONGE C,TONER DRAW	1	1	1
◉	9	•2BC15100	SPONGE B,TONER DRAW	1	1	1
◉	10	•2BC15120	SPONGE D,TONER DRAW	1	1	1
	11	•2BC15150	COVER,SUPPLY SPIRAL	1	1	1
	12	•2BC15160	SEAL,DRAW COVER	1	1	1
	13	•2BC15040	SPIRAL,TONER CONVEYING	1	1	1
◉	14	•63814070	BUSHING,SPIRAL ROLLER	3	3	3
◉	15	•71814100	BUSHING 6-21,MAIN UNIT	1	1	1
	16	•2BC15250	SHAFT,HOPPER AGITATION	1	1	1
	17	•2BC15260	MOUNT,CLEANING SPRING	1	1	1
	18	•2BC15200	SPRING,EJECT ACTUATOR	1	1	1
	19	•2BC15270	HOLDER,CLEANING SPRING	1	1	1
	20	•2A015120	FILM A,HOPPER HOUSING	1	1	1
	21	•2A015130	FILM B,HOPPER HOUSING	3	3	3
	22	•36715140	SPRING,HOPPER AGITATION	2	2	2
	23	•2BC15060	COVER,TONER DRAW	1	1	1
	24	•2BC15050	SPIRAL,TONER DRAW	1	1	1
◉	25	•36715630	GEAR 13,HOPPER DRAW	1	1	1
◉	26	•5MVX111DN003	RING STOPPER	1	1	1
◉	27	•36715380	GEAR 41,HOPPER AGITATION	1	1	1
◉	28	•36715640	GEAR 22,HOPPER	1	1	1
	29	•2BC15020	RIGHT SUPPORT PLATE,HOPPER	1	1	1
◉	30	•2BC15070	GEAR,DRAW SPIRAL	1	1	1
◉	31	•36715650	GEAR 22/13,IDLE	1	1	1
	32	•2BC15030	LEFT SUPPORT PLATE,HOPPER	1	1	1
◉	33	•36715210	MOTOR,TONER AGITATION	1	1	1
◉	34	•33415181	GEAR,TONER SUPPLY	1	1	1
◉	35	•36793270	PARTS,MOTOR TONER SUPPLY(SP)	1	1	1
◉	36	•36715660	GEAR 23/44,TONER MOTOR	1	1	1
◉	37	•33915180	TONER EMPTY DETECTION SENSOR	1	1	1
	38	•M2105740	MINIATURE CLAMP,UAMS-05S-2	1	1	1
	39	•M2104260	EDGING,EDS-0607U(KITAGAWA)	1	1	1
	40	•2BC15180	LOWER MOUNT BASE,HOPPER	1	1	1
◉	41	•36715600	SPONGE,DUCT HOPPER	1	1	1
	42	•36715560	STOPPER,HOPPER	2	2	2
	43	•36715570	SPRING,HOPPER	2	2	2
◉	44	•2BC15280	SHUTTER,HOPPER(USA)	1		
◉	44	•2BC15290	SHUTTER,HOPPER(EUR)		1	1
◉	45	•2BC05040	LABEL,JAM REMOVEMENT PAPER FEED(EUR)	1	1	1
◉	46	•2BC15210	UPPER MOUNT BASE,HOPPER(USA)	1		
◉	46	•2BC15190	UPPER MOUNT BASE,HOPPER(EUR)		1	1
◉	47	•2BC15080	SEAL,TONER SUPPLY	1	1	1
◉	48	•36715550	SEAL,HOPPER	1	1	1
	49	•75704300	CATCH FRONT COVER	1	1	1
	50	•2BC15170	UPPER HOUSING,HOPPER	1	1	1
	51	•2A015240	UPPER SPONGE,HOPPER HOUSING	2	2	2
	52	•2A004200	HINGE,TONER SUPPLY	1	1	1
	53	•36704181	SHAFT,TONER SUPPLY HINGE	1	1	1
	54	•2A004210	HOLDER,HINGE	2	2	2
	55	•77906210	CASSETTE STOPPER	1	1	1
◉	56	•2BC04240	LID,TONER SUPPLY	1	1	1
	57	•2A015170	FILTER A,HOPPER	1	1	1
	58	•2A015180	FILTER B,HOPPER	1	1	1
	59	•2A015190	FILM,HOPPER FILTER	1	1	1
	60	•36717120	GUIDE FILM,DUPLEX CONVEYING	1	1	1
	61	•2BC15310	COVER,REMAINDER DETECTION	1	1	1
	62	2BC27530	WIRE,HOPPER	1	1	1

• Parts with "•" are component parts or sub-assemblies of the assembly appearing immediately above them.
• Parts with "◉" indicates the Service parts.

• Parts with "• •" are component parts or sub-assembly with "•" appearing immediately above them.

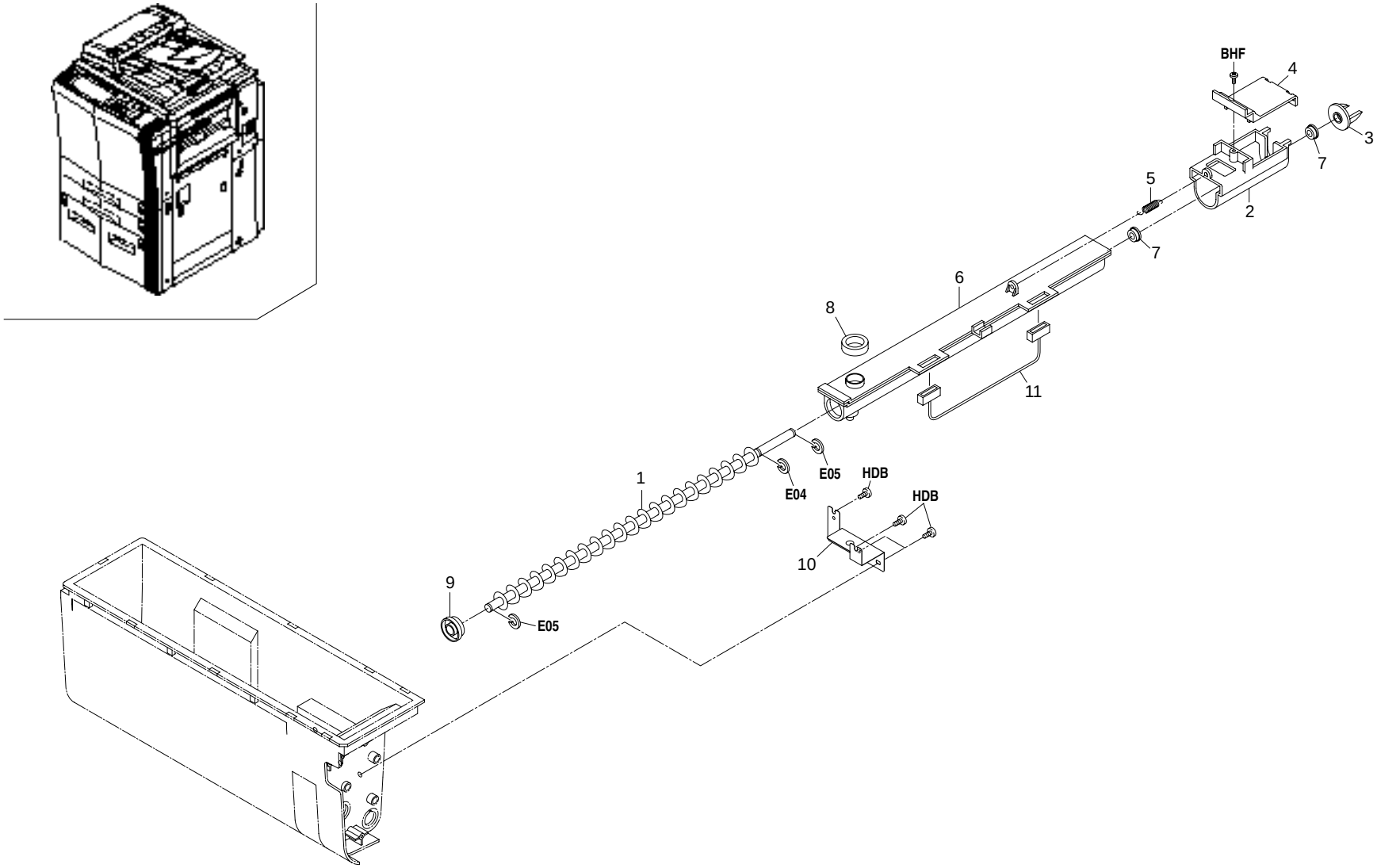
BHF
4
3
7
5
2
7
6
8
11
1
E05
HDB
E04
HDB
10
9
E05

FIG. 30 HOPPER SECTION II

SP	Ref. No.	Part. No.	Description	Quantity		
				120V	230V	240V
	1	33915530	SPIRAL,SUB HOPPER	1	1	1
	2	33915550	SHUTTER,SUB HOPPER	1	1	1
◉	3	33915540	COUPLING,SUB HOPPER	1	1	1
	4	33915560	COVER,SUB HOPPER SHUTTER	1	1	1
	5	33915570	SPRING,SUB HOPPER	1	1	1
◉	6	33900120	SUB HOPPER ASS'Y	1	1	1
◉	7	49028116	BUSHING 6,CLEANING UNIT	2	2	2
	8	2BC15300	SPONGE,SUB HOPPER	1	1	1
◉	9	65814240	FRONT BUSHING 15,AGITATION	1	1	1
	10	2BC15230	MOUNT,SUB HOPPER	1	1	1
	11	2BC27870	JUNCTION WIRING,TONER CONTROL SENSOR	1	1	1

• Parts with "•" are component parts or sub-assemblies of the assembly appearing immediately above them.
• Parts with "◉" indicates the Service parts.

• Parts with "• •" are component parts or sub-assembly with "•" appearing immediately above them.

FIG. 31 COVER SECTION (DF)

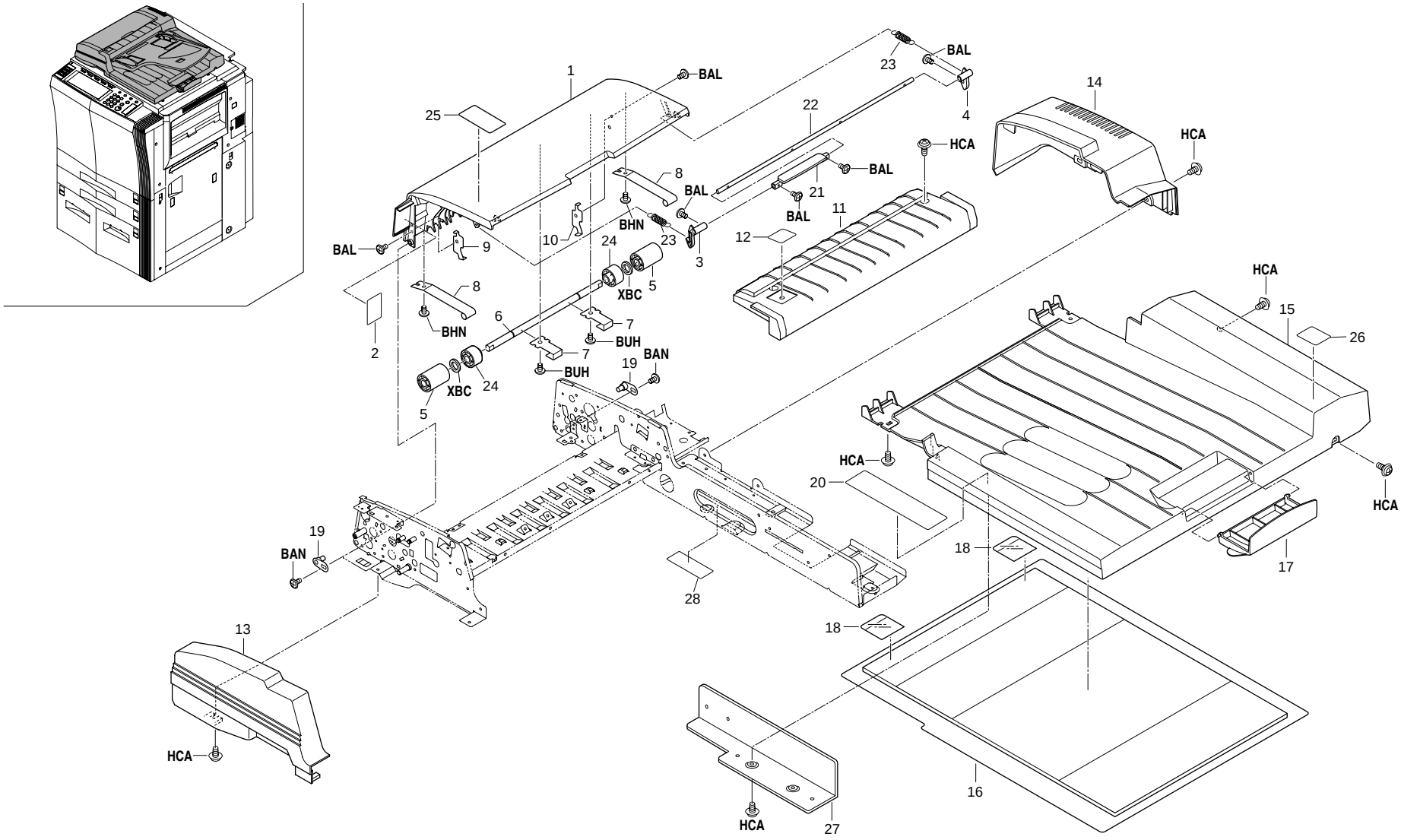

FIG. 31 COVER SECTION (DF)

SP	Ref. No.	Part. No.	Description	Quantity		
				120V	230V	240V
◉	1	3C004050	LEFT COVER	1	1	1
◉	2	3AL05090	LABEL,JAM REMOVEMENT	1	1	1
	3	3C007010	FRONT HOOK,LEFT COVER	1	1	1
	4	3C007020	REAR HOOK,LEFT COVER	1	1	1
◉	5	3AL08140	UPPER PULLEY,CONVEYING	2	2	2
	6	3AL08180	UPPER SHAFT,CONVEYING PULLEY	1	1	1
	7	3AL08220	UPPER PLATE SPRING,CONVEYING PULLEY	2	2	2
	8	3AL08270	PLATE SPRING,REGISTRATION GUIDE	2	2	2
	9	3AL08360	STOPPER,LEFT COVER FRONT	1	1	1
	10	3AL08370	STOPPER,LEFT COVER REAR	1	1	1
◉	11	3BC04011	COVER,PAPER FEED	1	1	1
◉	12	3AL05080	LABEL,ORIGINAL SET	1	1	1
◉	13	3C004010	FRONT COVER	1	1	1
◉	14	3C004020	REAR COVER	1	1	1
◉	15	3AL04110	RIGHT COVER(K M)	1	1	1
	16	3AL04060	MAT,ORIGINAL HOLDER	1	1	1
◉	17	3C004030	STOPPER,EJECT ORIGINAL	1	1	1
	18	3AL04080	FILM,ORIGINAL HOLDER	2	2	2
	19	63202120	SUPPORT PLATE,COVER	2	2	2
◉	20	3AL05111	LABEL,OPERATION	1	1	1
	21	3C004040	HANDLE,HOOK	1	1	1
	22	3AL07290	SHAFT,HOOK	1	1	1
	23	72118141	SPRING,CLEANING BLADE	2	2	2
◉	24	3AL08500	PULLEY,REGISTRATION	2	2	2
◉	25	3AL05120	LABEL,DF ORIGINAL CAUTION	1	1	1
◉	26	3C005020	LABEL,HINGE CAUTION	1	1	1
	27	3C002010	RIGHT REINFORCEMENT,COVER	1	1	1
	28	3C005030	RATING PLATE(C)	1	1	1

- Parts with "•" are component parts or sub-assemblies of the assembly appearing immediately above them.
- Parts with "◉" indicates the Service parts.

- Parts with "• •" are component parts or sub-assembly with "•" appearing immediately above them.

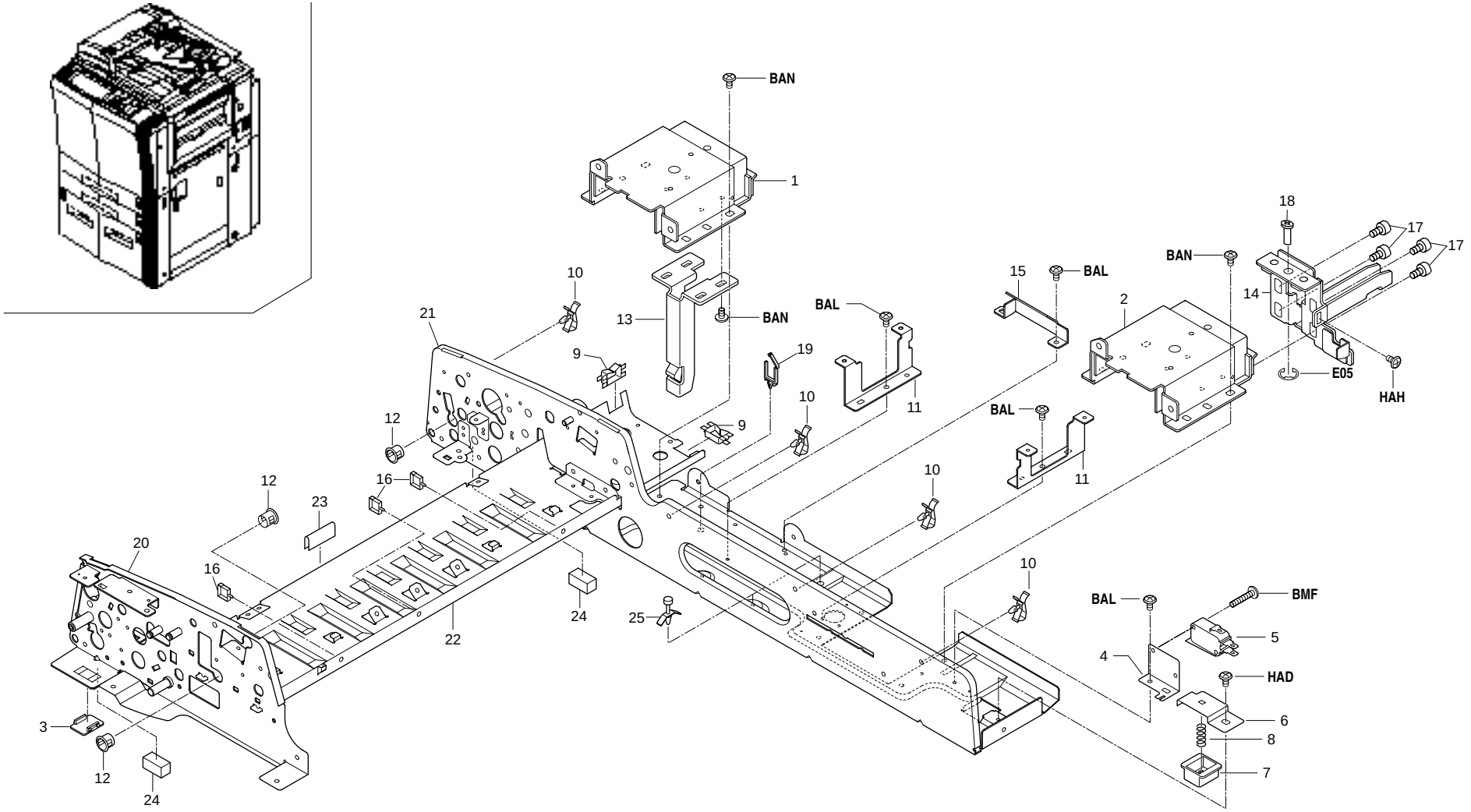
BAN
1
10
21
13
BAN
9
19
BAL
11
15
BAL
2
BAN
18
17
17
14
E05
HAH
12
9
10
BAL
11
12
16
23
10
20
16
24
25
22
10
BAL
BMF
5
4
HAD
6
8
7
3
12
24

FIG. 32 FRAME SECTION (DF)

SP	Ref. No.	Part. No.	Description	Quantity		
				120V	230V	240V
◉	1	3AL03013	LEFT HINGE	1	1	1
◉	2	3AL03023	RIGHT HINGE	1	1	1
	3	3AL02200	SPACER,SRDF	1	1	1
	4	3AL02050	MOUNT,RELEASE SWITCH	1	1	1
◉	5	36827140	SWITCH A,INTERLOCK	1	1	1
	6	3AL02080	HOLDER,SPRING	1	1	1
	7	3AL02070	STOPPER,ORIGINAL DETECTION SWITCH	1	1	1
	8	66008070	SPRING,DRUM DRIVE	1	1	1
	9	M2104200	EDGING EDS-1	2	2	2
	10	M2109260	WIRE SADDLE,YMC-05-H-0(KITAGAWA)	4	4	4
	11	3BC02040	MOUNT,DF PCB	2	2	2
	12	M1203200	OPEN BUSHING,OCB-375	3	3	3
	13	3AL03032	LEFT STAY,HINGE	1	1	1
	14	3AL03045	RIGHT STAY,HINGE	1	1	1
	15	3AL02100	GUIDE,INTERFACE WIRE	1	1	1
	16	M2105730	MINIATURE CLAMP,UAMS-07-0	3	3	3
	17	29820110	FRONT PIN,FULCRUM	4	4	4
	18	3AL03050	PIN,HINGE ADJUSTMENT(M)	1	1	1
	19	M2109080	LOCKING WIRE SADDLE,LWS-4NS	1	1	1
	20	3BC02010	FRONT FRAME	1	1	1
	21	3BC02020	REAR FRAME	1	1	1
	22	3BC02030	STAY,PAPER FEED	1	1	1
	23	65907610	SEAL,PAPER EMPTY	1	1	1
	24	23227350	SHIELD B,GASKET	2	2	2
	25	M2108950	SPACER,KGPS-18S(KITAGAWA)	2	2	2

• Parts with "•" are component parts or sub-assemblies of the assembly appearing immediately above them.
• Parts with "◉" indicates the Service parts.

• Parts with "• •" are component parts or sub-assembly with "•" appearing immediately above them.

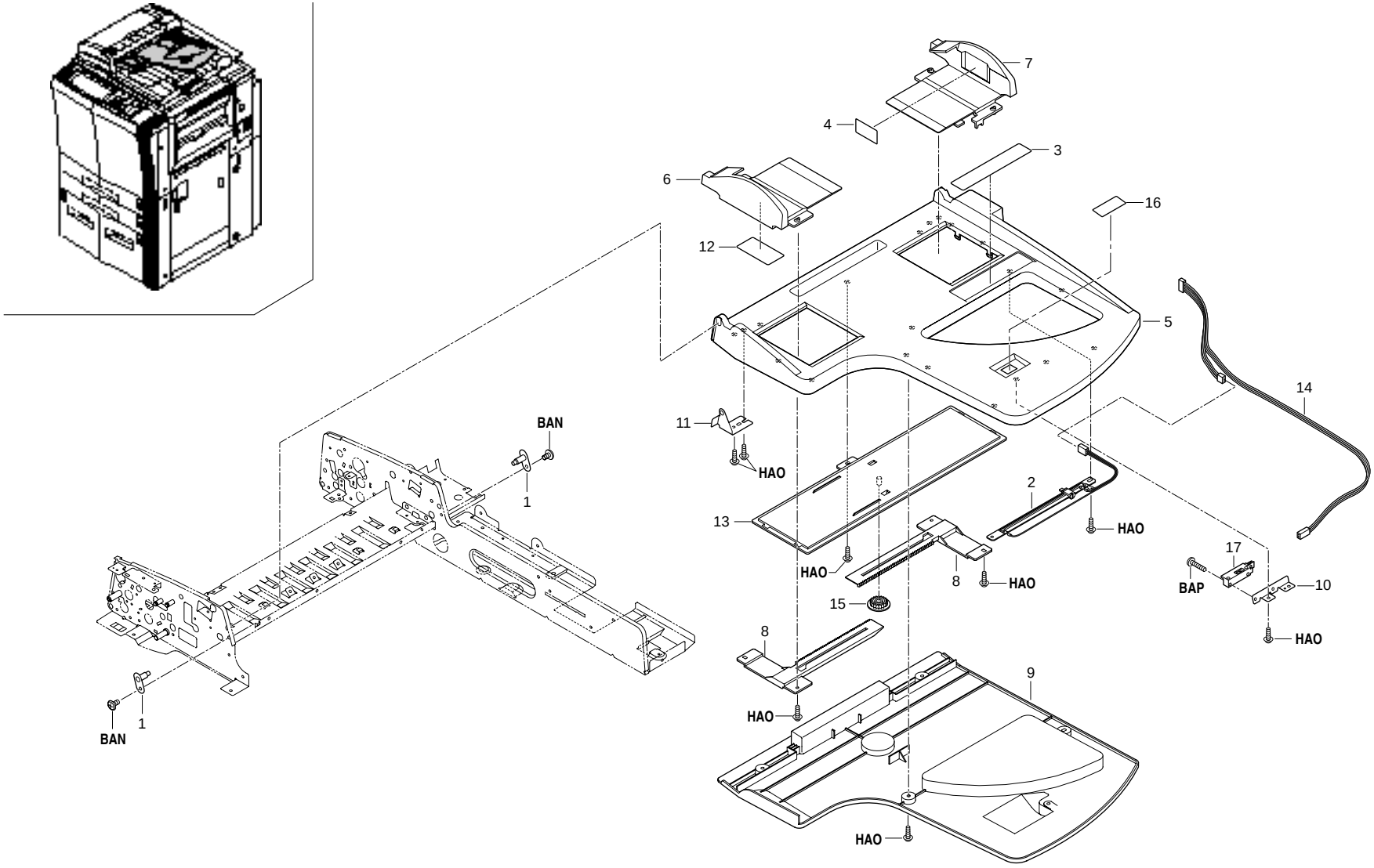
7
4
3
6
16
12
5
14
11
BAN
HAO
1
2
13
HAO
HAO
8
HAO
17
BAP
10
15
HAO
8
9
HAO
HAO
1
BAN

FIG. 33 PAPER FEED-IN SECTION (DF)

SP	Ref. No.	Part. No.	Description	Quantity		
				120V	230V	240V
	1	3AL06102	FULCRUM PIN,TABLE	2	2	2
◉	2	18327100	SWITCH,SIZE DETECTION	1	1	1
◉	3	3AL05040	LABEL,ORIGINAL SIZE(METRIC)	1	1	1
	4	3AL05060	LABEL,ORIGINAL CURSOR(METRIC)	1	1	1
◉	5	3C006010	TABLE,ORIGINAL	1	1	1
	6	3AL06130	FRONT GUIDE,ORIGINAL(K M)	1	1	1
	7	3AL06140	REAR GUIDE,ORIGINAL(K M)	1	1	1
	8	3AL06041	RACK,TABLE	2	2	2
◉	9	3C006020	COVER,TABLE	1	1	1
	10	3AL06060	MOUNT,SIZE DETECTION	1	1	1
	11	3AL06072	FRONT SUPPORT PLATE,TABLE	1	1	1
	12	3AL06090	CUSHION,ORIGINAL GUIDE	1	1	1
◉	13	3C006030	COVER,ORIGINAL GUIDE	1	1	1
	14	3AL27030	WIRE,TABLE	1	1	1
◉	15	65907210	GEAR 20,CASSETTE	1	1	1
◉	16	78706241	FILTER CF SENSOR	1	1	1
◉	17	78727110	JAM DETECTION SWITCH	1	1	1

- Parts with "•" are component parts or sub-assemblies of the assembly appearing immediately above them.
- Parts with "◉" indicates the Service parts.

- Parts with "• •" are component parts or sub-assembly with "•" appearing immediately above them.

FIG. 34 PAPER CONVEYING SECTION (DF)

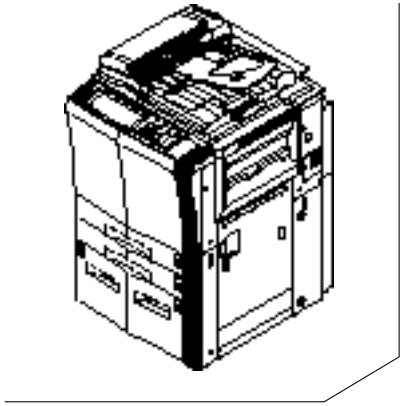

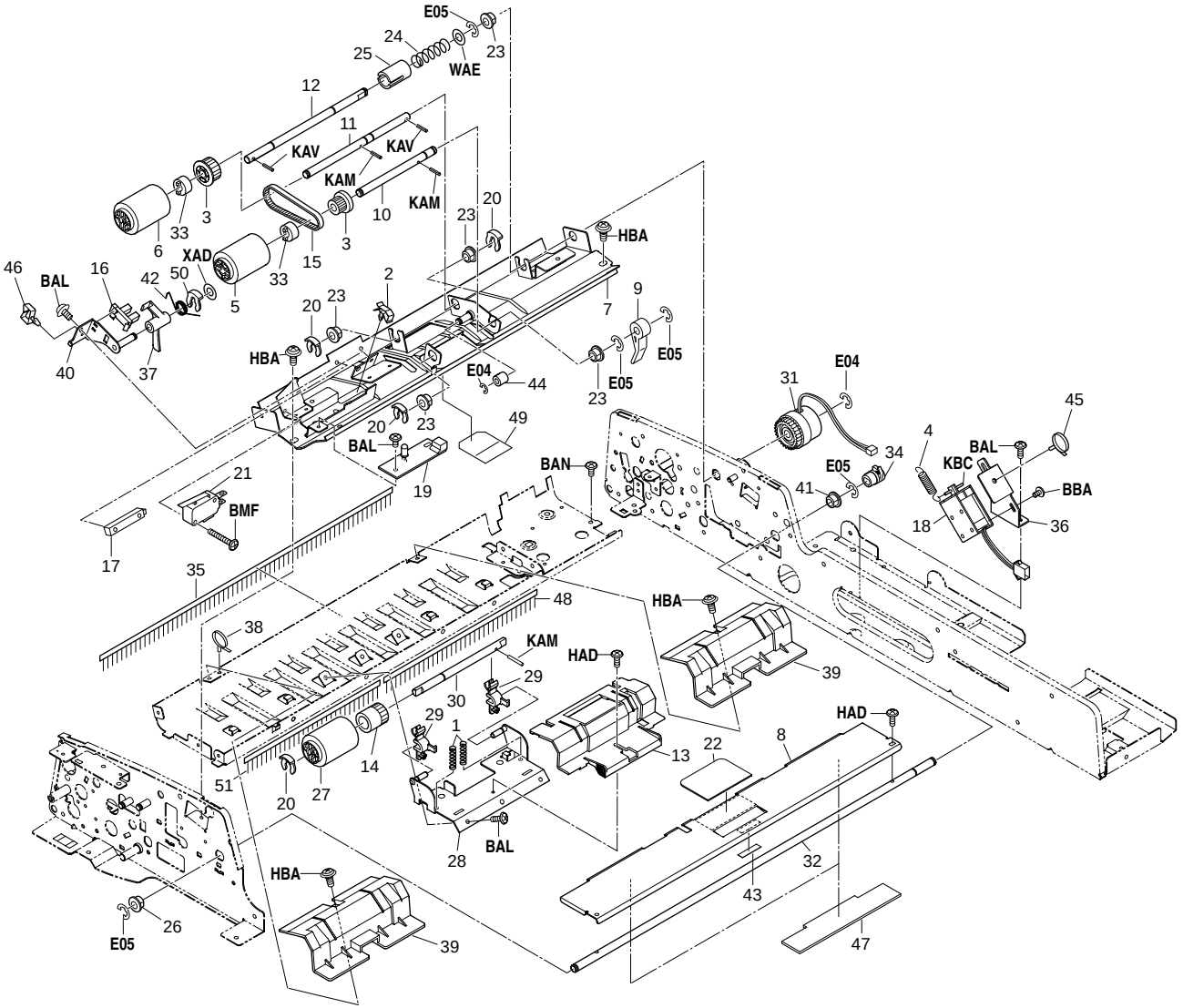

FIG. 34 PAPER CONVEYING SECTION (DF)

2BC/2BD

SP	Ref. No.	Part. No.	Description	Quantity		
				120V	230V	240V
	1	3BR07180	SPRING,SEPARATION PULLEY	2	2	2
	2	M2109350	WIRE SADDLE,YMC-15-0(KITAGAWA)	1	1	1
◉	3	66206190	LOWER PULLEY 26,FEED	2	2	2
	4	3BC07250	SPRING,LIFT PLATE	1	1	1
◉	5	3BC07010	PULLEY,LEADING FEED	1	1	1
◉	6	3BC07020	PULLEY,SEPARATION	1	1	1
	7	3BC07031	UPPER GUIDE,PAPER FEED	1	1	1
	8	3BC07050	LIFT PLATE,PAPER FEED	1	1	1
	9	3BC07260	STOPPER,ORIGINAL	1	1	1
	10	3BC07080	SHAFT,LEADING FEED	1	1	1
	11	3BC07090	FRONT SHAFT,PAPER FEED	1	1	1
	12	3BC07100	REAR SHAFT,PAPER FEED	1	1	1
	13	3BC07230	GUIDE,SEPARATION	1	1	1
◉	14	33906430	TORQUE LIMITER,BYPASS	1	1	1
◉	15	3BC07170	BELT 138,LEADING FEED	1	1	1
◉	16	35327400	SWITCH,FEED	1	1	1
◉	17	63227150	SWITCH L,FEED	1	1	1
◉	18	3AL27070	SOLENOID,LEADING FEED	1	1	1
◉	19	3AL28020	SET LED PCB	1	1	1
◉	20	34806150	STOPPER 5	4	4	4
◉	21	36827140	SWITCH A,INTERLOCK	1	1	1
◉	22	3BC07320	PAD,LIFT	1	1	1
◉	23	73210450	BUSH, 6	5	5	5
	24	73818100	SPRING, BLADE THRUST	1	1	1
	25	74306520	JOINT,PULLEY DRIVE SHAFT	1	1	1
◉	26	29806560	BUSHING 6	1	1	1
◉	27	3BC07020	PULLEY,SEPARATION	1	1	1
	28	3BC07060	MOUNT,SEPARATION PULLEY	1	1	1
	29	3BC07071	ARM,SEPARATION PULLEY	2	2	2
	30	3BC07111	SHAFT,SEPARATION	1	1	1
◉	31	3AL93010	PARTS,CLUTCH PAPER FEED,SP	1	1	1
	32	3BC07120	SHAFT,LIFT PLATE	1	1	1
◉	33	3BC07130	ONE-WAY CLUTCH 6	2	2	2
	34	3BC07300	LEVER B,LIFT	1	1	1
◉	35	63212210	STATIC ELIMINATOR,EJECT	1	1	1
	36	3BC07161	MOUNT,LIFT SOLENOID	1	1	1
◉	37	3BC07181	ACTUATOR,ORIGINAL SET	1	1	1
	38	M0207000	BINDING BAND,KB-100-1	1	1	1
	39	3BC07040	LOWER GUIDE,PAPER FEED	2	2	2
	40	3BC07200	MOUNT,SET SWITCH	1	1	1
◉	41	73210450	BUSH, 6	1	1	1
	42	3BC07210	SPRING,ACTUATOR	1	1	1
	43	65706200	SEAL B,RACK	1	1	1
◉	44	65710330	PULLEY,EJECT TENSION	1	1	1
	45	M2607010	BINDING BAND,PLT1M	1	1	1
	46	M2105720	MINIATURE CLAMP,UAMS-05-2	1	1	1
	47	3BC07270	SHEET,LIFT PLATE PAPER FEED	2	2	2
◉	48	3BC07311	STATIC ELIMINATOR,EJECT	1	1	1
	49	3BC07290	UPPER SHEET,GUIDE PAPER FEED	1	1	1
◉	50	34806140	STOPPER 4	1	1	1
◉	51	3BC07340	FRONT STATIC ELIMINATOR,EJECT	1	1	1

• Parts with "•" are component parts or sub-assemblies of the assembly appearing immediately above them.
• Parts with "◉" indicates the Service parts.

• Parts with "• •" are component parts or sub-assembly with "•" appearing immediately above them.

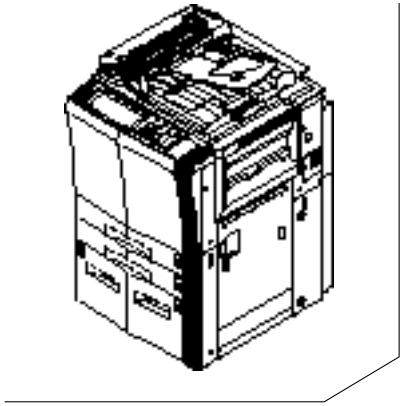

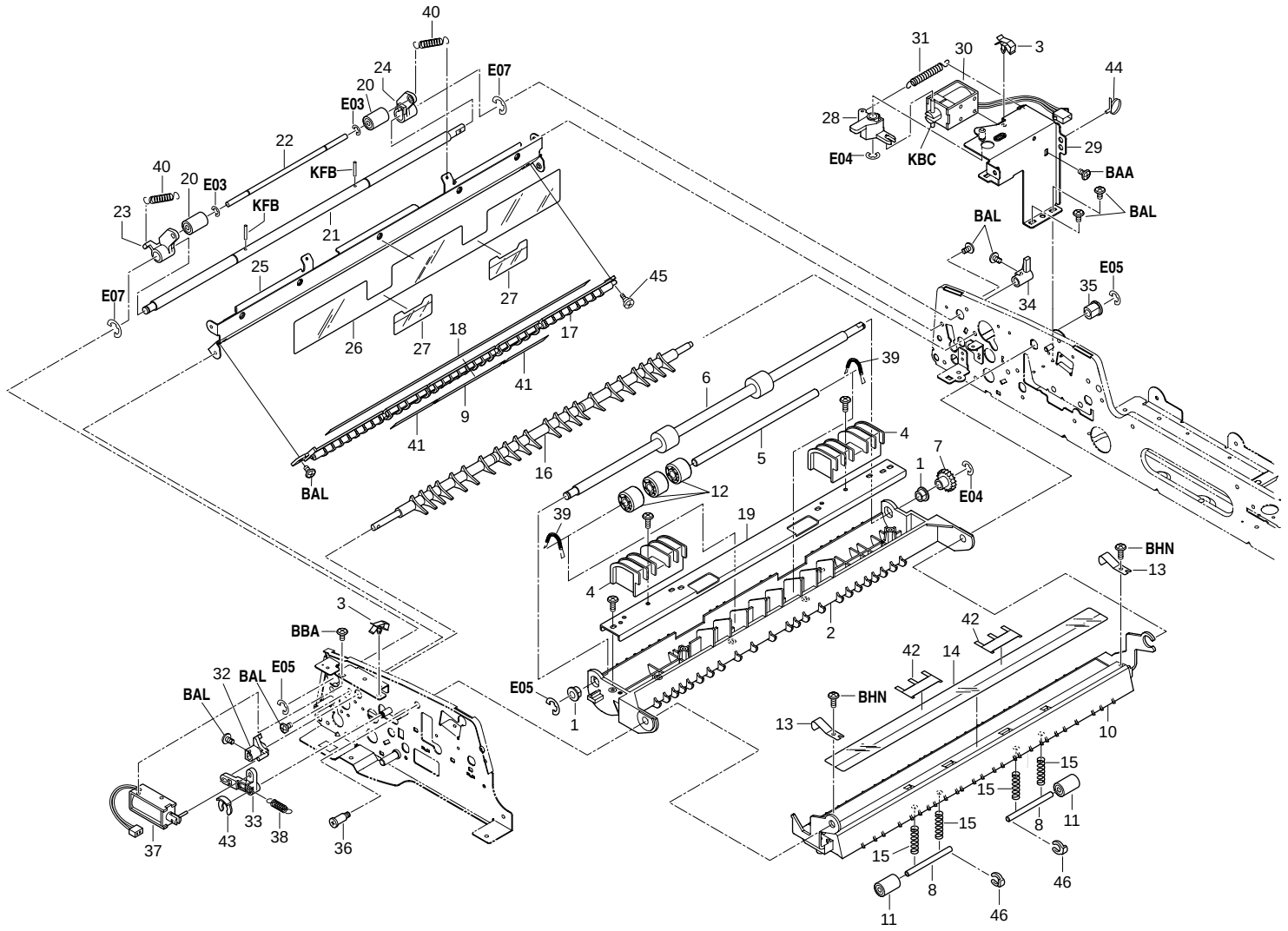
40
24
20
E03
E07
22
KFB
40
20
E03
23
KFB
21
25
E07
45
27
26
27
18
17
41
9
41
BAL
16
6
39
5
4
12
7
1
E04
39
19
4
2
E05
1
3
BBA
32
BAL
BAL
E05
37
43
33
38
36
31
30
3
44
28
29
E04
KBC
BAA
BAL
BAL
E05
35
34
BHN
13
42
42
14
BHN
13
10
15
15
8
11
15
15
8
46
11
46

FIG. 35 REVERSING SECTION (DF)

SP	Ref. No.	Part. No.	Description	Quantity		
				120V	230V	240V
◉	1	29806560	BUSHING 6	2	2	2
	2	3BC08031	GUIDE,RESISTANCE	1	1	1
	3	M2109260	WIRE SADDLE,YMC-05-H-0(KITAGAWA)	2	2	2
	4	3BC08190	HANDLE,REGISTRATION GUIDE	2	2	2
	5	3BC08090	SHAFT,REGISTRATION PULLEY	1	1	1
◉	6	3AL10020	ROLLER,LOOP	1	1	1
◉	7	33918100	GEAR 18,FUR BRUSH	1	1	1
	8	3BC08061	SHAFT,EJECT PULLEY	2	2	2
	9	3AL10281	LOWER LEFT SHEET B,GUIDE LOOP	1	1	1
	10	3BC08042	GUIDE,EJECT	1	1	1
◉	11	3AL08170	PULLEY,EJECT	2	2	2
◉	12	3BC08220	PULLEY B,REGISTRATION	3	3	3
	13	3AL08260	PLATE SPRING,EJECT GUIDE	2	2	2
	14	3AL08410	SHEET,GUIDE EJECT	1	1	1
	15	3AL08560	SPRING,EJECT PULLEY	4	4	4
	16	3AL10032	GUIDE,LOOP FEED SHIFT	1	1	1
	17	3AL10166	LEFT GUIDE,LOOP	1	1	1
	18	3AL10181	LEFT SHEET,GUIDE LOOP	1	1	1
	19	3BC08180	REINFORCEMENT,REGISTRATION GUIDE	1	1	1
◉	20	3AL08170	PULLEY,EJECT	2	2	2
	21	3AL10040	SHAFT,FULCRUM PULLEY	1	1	1
	22	3AL10060	SHAFT,LOOP PULLEY	1	1	1
	23	3AL10120	FRONT HOLDER,LOOP PULLEY	1	1	1
	24	3AL10200	REAR HOLDER,LOOP PULLEY	1	1	1
	25	3AL10011	GUIDE,LOOP	1	1	1
	26	3AL10170	SHEET,GUIDE LOOP	1	1	1
	27	3AL10210	SHEET,LOOP PULLEY	2	2	2
	28	3AL10091	LEVER,LOOP PULLEY SOLENOID	1	1	1
	29	3AL10143	MOUNT,LOOP PULLEY SOLENOID	1	1	1
◉	30	3AL27111	SOLENOID,LOOP PULLEY	1	1	1
	31	3AL10230	SPRING,LOOP PULLEY SOLENOID	1	1	1
	32	3AL10081	LEVER,LOOP FEED SHIFT	1	1	1
	33	3AL10110	LEVER,LOOP FEED SHIFT SOLENOID	1	1	1
	34	3AL10100	LEVER,LOOP PULLEY	1	1	1
	35	60606101	BUSHING FEED BACK ROLLER	1	1	1
	36	3BC07330	PIN B,PAPER FEED GUIDE	1	1	1
◉	37	3AL27080	SOLENOID,FEED SHIFT	1	1	1
	38	3AL08490	SPRING,EJECT FEED SHIFT	1	1	1
	39	3BC08130	SPRING,REGISTRATION PULLEY	2	2	2
	40	63526080	SPRING,SAFETY SWITCH LEVER	2	2	2
	41	3AL08590	UPPER SHEET B,CONVEYING PULLEY	2	2	2
	42	3BC08140	SHEET,EJECT PULLEY	2	2	2
◉	43	34806140	STOPPER 4	1	1	1
	44	M2607010	BINDING BAND,PLT1M	1	1	1
	45	3AL10290	LEFT PIN,GUIDE LOOP	1	1	1
◉	46	65016080	STOP RING E3	2	2	2

• Parts with "•" are component parts or sub-assemblies of the assembly appearing immediately above them.
• Parts with "◉" indicates the Service parts.

• Parts with "• •" are component parts or sub-assembly with "•" appearing immediately above them.

FIG. 36 PAPER EJECT SECTION (DF)

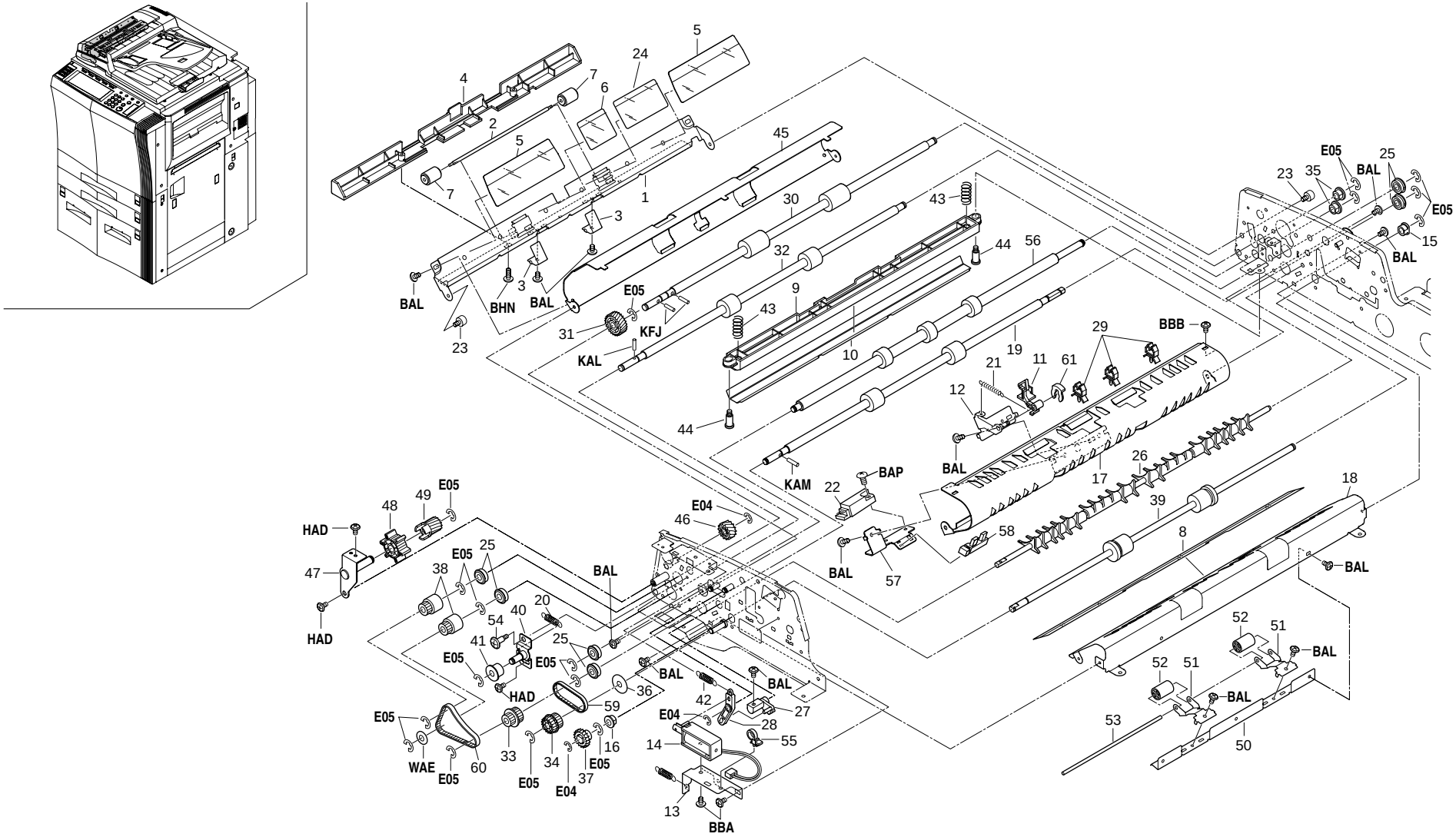

FIG. 36 PAPER EJECT SECTION (DF)

2BC/2BD

SP	Ref. No.	Part. No.	Description	Quantity		
				120V	230V	240V
	1	3AL08033	GUIDE,CONVEYING	1	1	1
	2	3AL08190	LOWER SHAFT,CONVEYING PULLEY	1	1	1
	3	3AL08240	LOWER PLATE SPRING,CONVEYING PULLEY	2	2	2
	4	3AL08302	COVER,CONVEYING PULLEY	1	1	1
	5	3AL08421	OUTER SHEET,GUIDE CONVEYING	2	2	2
	6	3AL08430	INNER SHEET,GUIDE CONVEYING	1	1	1
◉	7	3AL08480	FRONT PULLEY,READING	2	2	2
	8	3AL08451	SHEET,GUIDE PLATE EJECT	1	1	1
	9	3AL08072	GUIDE,READING	1	1	1
	10	3AL08401	SHEET,ORIGINAL HOLDER	1	1	1
	11	3AL10073	LIGHT SHIELD,LOOP	1	1	1
	12	3AL10131	MOUNT,LIGHT SHIELD	1	1	1
	13	3AL08310	MOUNT,EJECT SOLENOID	1	1	1
◉	14	3AL27080	SOLENOID,FEED SHIFT	1	1	1
◉	15	63806290	BUSHING,6	1	1	1
◉	16	73210450	BUSH, 6	1	1	1
	17	3BC08011	RIGHT GUIDE,REGISTRATION	1	1	1
	18	3BC08020	GUIDE PLATE,EJECT	1	1	1
◉	19	3BC08150	INNER ROLLER,CONVEYING	1	1	1
	20	3BC22110	SPRING,CONVEYING ROLLER	1	1	1
	21	3AL10190	SPRING,LIGHT SHIELD	1	1	1
◉	22	3C027020	SENSOR,TIMING SWITCH	1	1	1
	23	63511541	PIN,ADF	2	2	2
	24	3AL08530	INNER SHEET,GUIDE CONVEYING LARGE	1	1	1
◉	25	74808080	BEARING,686ZZNR	6	6	6
	26	3BC08160	GUIDE,EJECT FEED SHIFT	1	1	1
	27	3BC08081	LEVER,EJECT	1	1	1
	28	3AL08341	LEVER,EJECT SOLENOID	1	1	1
	29	M2105720	MINIATURE CLAMP,UAMS-05-2	3	3	3
◉	30	3AL08161	UPPER ROLLER,CONVEYING	1	1	1
◉	31	3AL02150	GEAR 24,JAM REMOVEMENT	1	1	1
◉	32	3AL08112	LOWER ROLLER,CONVEYING	1	1	1
◉	33	18307370	PULLEY 25/18P2M,PAPER FEED	1	1	1
◉	34	3AL22040	GEAR Z18/T25P2M	1	1	1
◉	35	29806560	BUSHING 6	2	2	2
	36	75714210	COLLAR DEVELOPING UNIT	1	1	1
◉	37	33918100	GEAR 18,FUR BRUSH	1	1	1
◉	38	18307550	PULLEY 18P2M,LEADING FEED	2	2	2
◉	39	3AL08130	ROLLER,EJECT	1	1	1
	40	3BC22010	TENSION PLATE,CONVEYING ROLLER	1	1	1
◉	41	48928800	PULLEY,TIMING BELT	1	1	1
	42	63814260	SPRING,DEV. SHUTTER	1	1	1
	43	72418480	SPRING, SPIRAL ROLLER	2	2	2
	44	3AL07230	PIN,PAPER FEED	2	2	2
	45	3AL08013	LEFT GUIDE,REGISTRATION	1	1	1
◉	46	3AL02160	GEAR 14,JAM REMOVEMENT	1	1	1
	47	3AL02121	MOUNT,JAM REMOVEMENT DIAL	1	1	1
	48	3AL02110	DIAL,JAM REMOVEMENT	1	1	1
◉	49	3AL02170	GEAR 14,JOINT	1	1	1
	50	3AL08280	MOUNT,CONVEYING PULLEY	1	1	1
	51	3AL08250	INNER PLATE SPRING,CONVEYING PULLEY	2	2	2
◉	52	3AL08100	INNER PULLEY,CONVEYING	2	2	2
	53	3AL08201	INNER SHAFT,CONVEYING PULLEY	1	1	1
	54	73918080	PIN,CLEANING BLADE	1	1	1
	55	M2107120	BINDING BAND SG-130	1	1	1
◉	56	3BC08050	ROLLER,REGISTRATION	1	1	1
	57	3BC08071	MOUNT,TIMING SWITCH	1	1	1
◉	58	35327400	SWITCH,FEED	1	1	1
◉	59	3BC22080	BELT 112,REGISTRATION ROLLER	1	1	1
◉	60	3BC22090	BELT 140,MIDDLE ROLLER	1	1	1
◉	61	65016080	STOP RING E3	1	1	1

• Parts with "•" are component parts or sub-assemblies of the assembly appearing immediately above them.
• Parts with "◉" indicates the Service parts.

• Parts with "• •" are component parts or sub-assembly with "•" appearing immediately above them.

FIG. 37 DRIVING SECTION (DF)

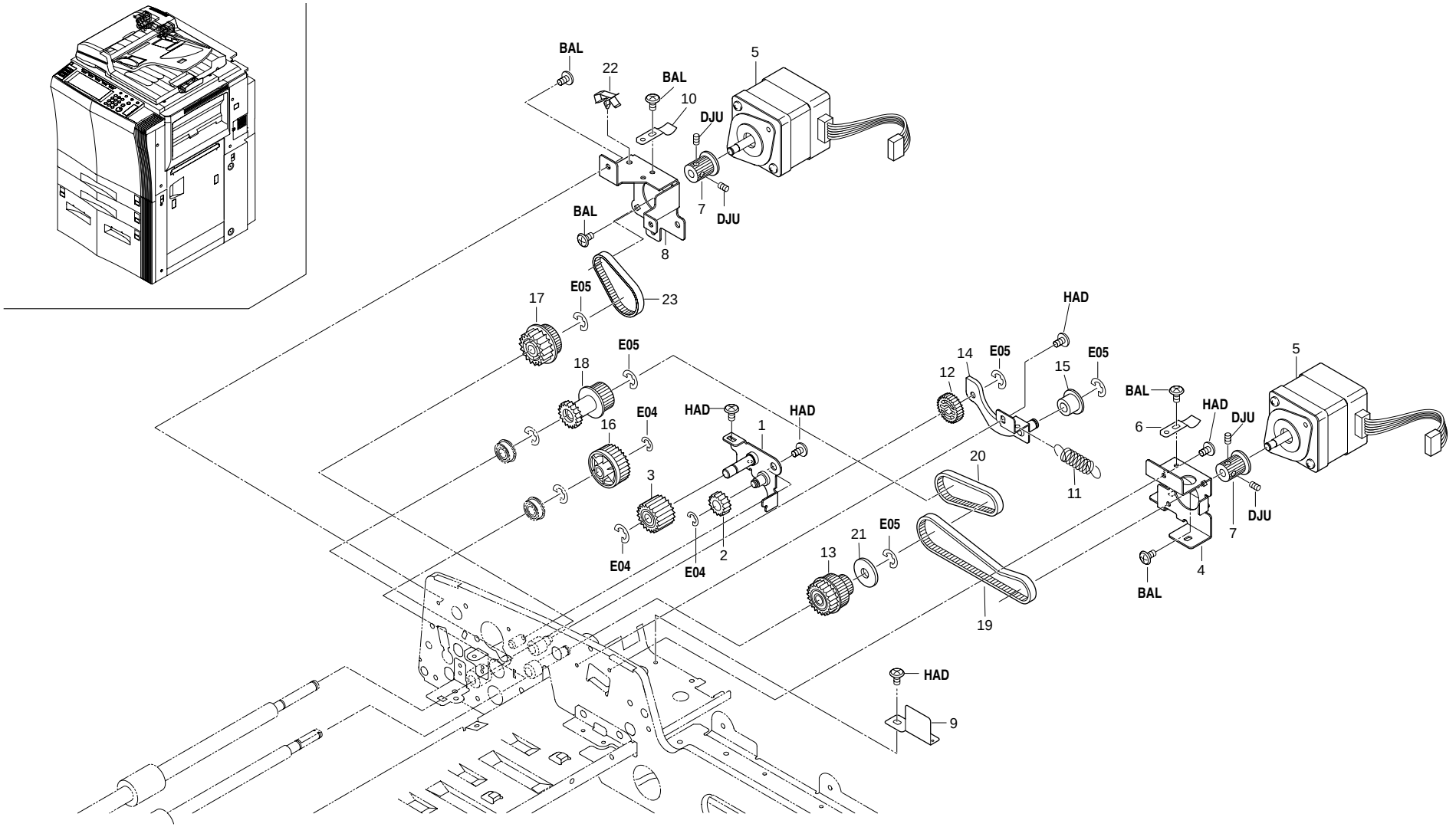

FIG. 37 DRIVING SECTION (DF)

SP	Ref. No.	Part. No.	Description	Quantity		
				120V	230V	240V
	1	3BC22020	MOUNT,IDLE GEAR	1	1	1
◉	2	63814100	IDLE GEAR 15,AGITATION	1	1	1
◉	3	65011310	GEAR 20,IDLE	1	1	1
	4	3BC22030	MOUNT,PAPER FEED MOTOR	1	1	1
◉	5	3AL27011	MOTOR,PAPER FEED	2	2	2
	6	34920190	GROUND PLATE,FIXING UNIT	1	1	1
	7	78722151	PULLEY 20	2	2	2
	8	3BC22040	MOUNT,CONVEYING MOTOR	1	1	1
	9	3AL02190	GUIDE B,WIRE PAPER FEED MOTOR	1	1	1
	10	34920190	GROUND PLATE,FIXING UNIT	1	1	1
	11	75018250	SPRING CLEANING SOLENOID	1	1	1
◉	12	66018180	GEAR 26,SPIRAL ROLLER	1	1	1
◉	13	3AL22010	PULLEY T35/T22/Z22	1	1	1
	14	3BC22050	TENSION PLATE,PAPER FEED MOTOR	1	1	1
	15	48928800	PULLEY,TIMING BELT	1	1	1
◉	16	76221040	GEAR 28 FD	1	1	1
◉	17	3AL22030	GEAR Z22/T35P2M	1	1	1
◉	18	3AL22020	PULLEY T28/Z18	1	1	1
◉	19	3BC22070	BELT 190,PAPER FEED MOTOR	1	1	1
◉	20	3BC22080	BELT 112,REGISTRATION ROLLER	1	1	1
	21	75714210	COLLAR DEVELOPING UNIT	1	1	1
	22	M2109260	WIRE SADDLE,YMC-05-H-0(KITAGAWA)	1	1	1
◉	23	3BC22100	BELT 100,CONVEYING	1	1	1

• Parts with "•" are component parts or sub-assemblies of the assembly appearing immediately above them.
• Parts with "◉" indicates the Service parts.

• Parts with "• •" are component parts or sub-assembly with "•" appearing immediately above them.

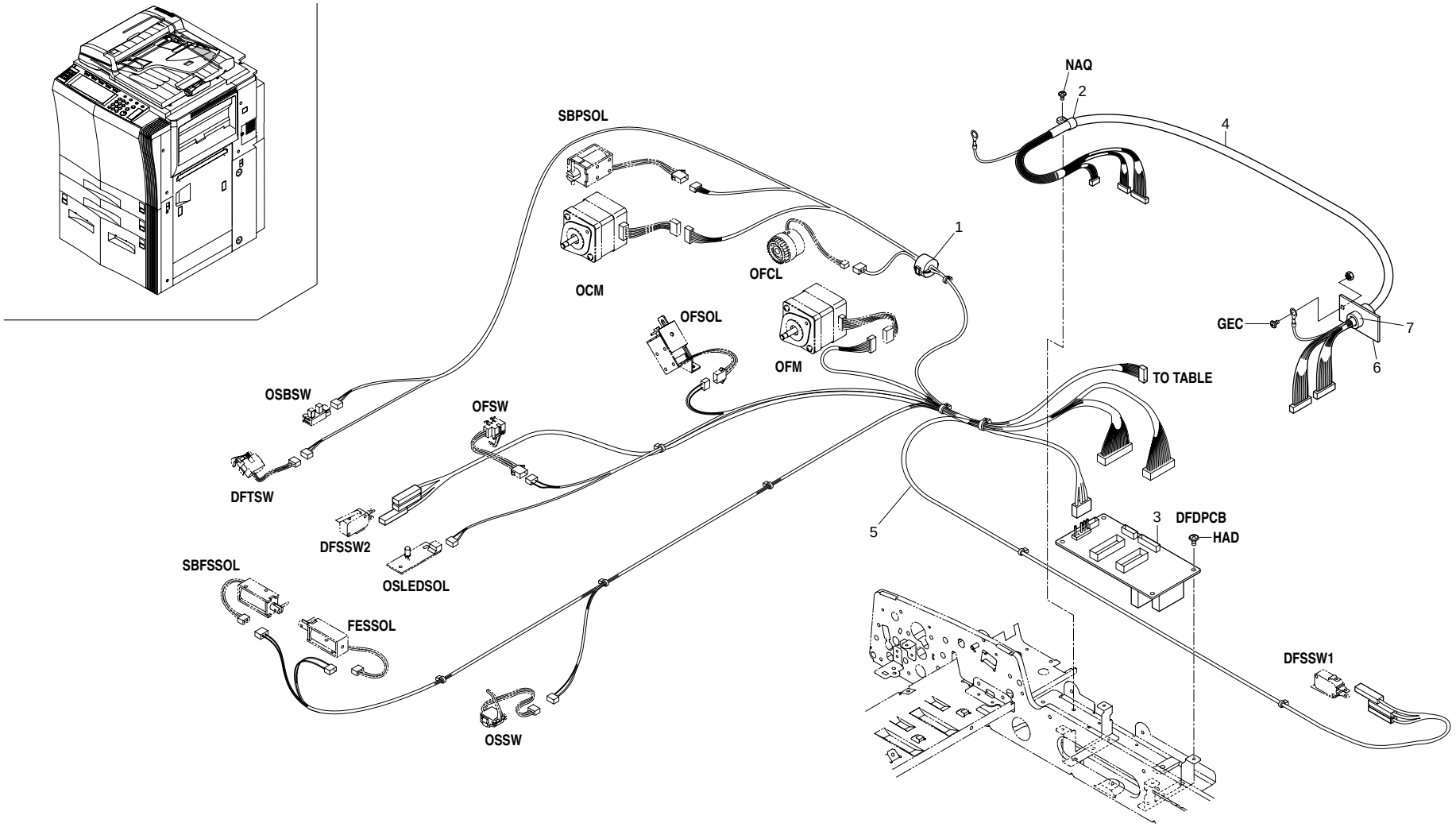
NAQ
2
4
SBPSOL
1
OCM
OFCL
OFSOL
OFM
GEC
7
6
TO TABLE
OSBSW
OFSW
DFTSW
3
DFDPCB
HAD
5
DFSSW2
OSLEDSOL
SBFSSOL
FESSOL
DFSSW1
OSSW

FIG. 38 ELECTRICAL SECTION (DF)

SP	Ref. No.	Part. No.	Description	Quantity		
				120V	230V	240V
	1	65027470	CORE,7-15X18	1	1	1
	2	M2105040	NYLON CLAMP 6N,NK-6N	1	1	1
◉	3	3AL93020	PARTS,DRIVER PCB,SP	1	1	1
	4	3BC27020	WIRE,INTERFACE	1	1	1
	5	3BC27013	WIRE,PAPER FEED	1	1	1
	6	3BC22060	MOUNT,DF WIRE	1	1	1
	7	M1203550	STRAIN RELEAF BUSHING,SR-7W-2	1	1	1

• Parts with "•" are component parts or sub-assemblies of the assembly appearing immediately above them.
• Parts with "◉" indicates the Service parts.

• Parts with "• •" are component parts or sub-assembly with "•" appearing immediately above them.

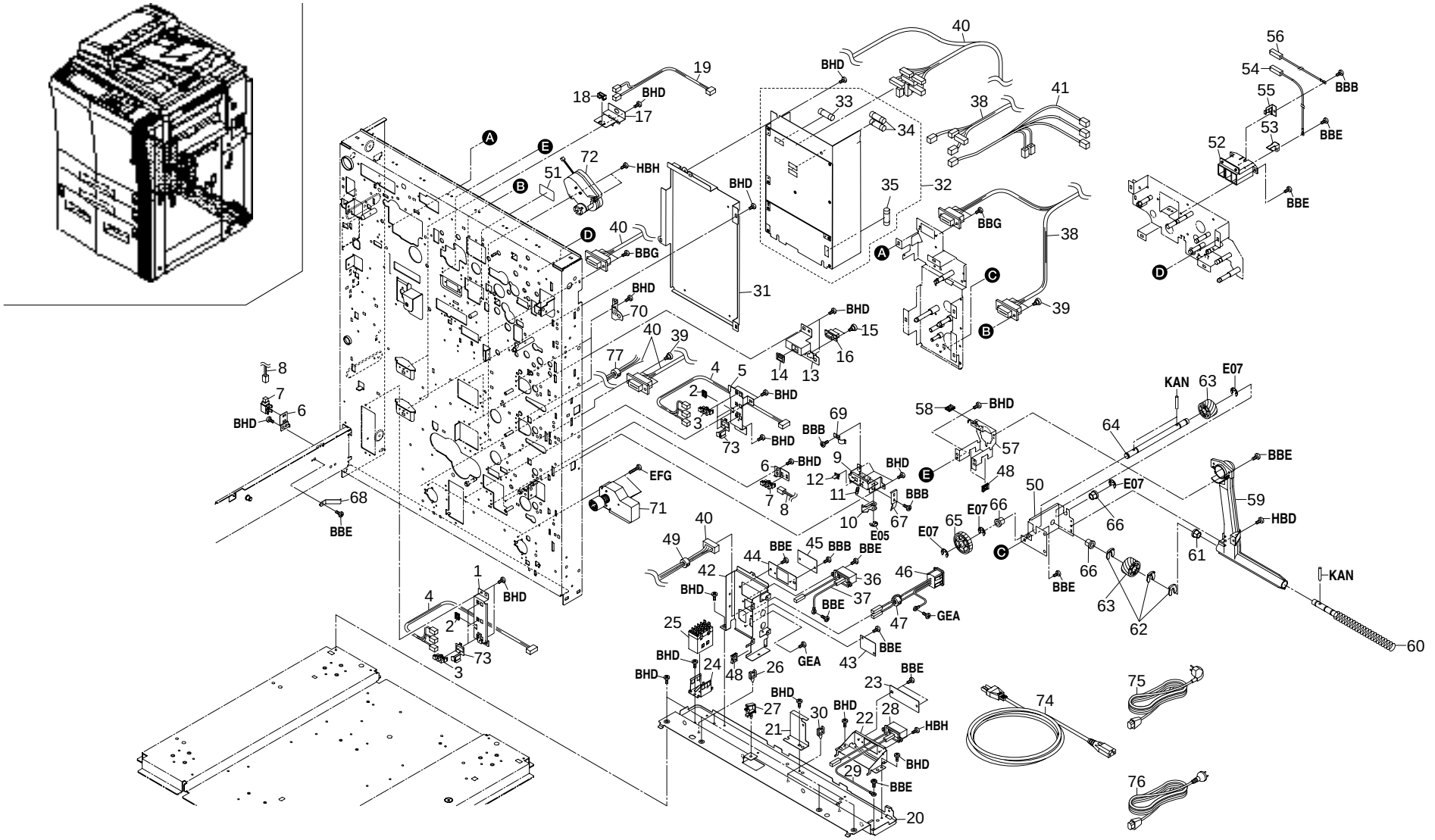
1
2
3
4
5
6
7
8
9
10
11
12
13
14
15
16
17
18
19
20
21
22
23
24
25
26
27
28
29
30
31
32
33
34
35
36
37
38
39
40
41
42
43
44
45
46
47
48
49
50
51
52
53
54
55
56
57
58
59
60
61
62
63
64
65
66
67
68
69
70
71
72
73
74
75
76
77
BHD
BBB
BBE
BBG
HBH
EFG
GEA
E07
E05
KAN
HBD

FIG. 39 ELECTRICAL SECTION I

2BC/2BD

SP	Ref. No.	Part. No.	Description	Quantity		
				120V	230V	240V
	1	2BC26210	MOUNT B,DECK REMAINING DETECTION	1	1	1
	2	M2104260	EDGING,EDS-0607U(KITAGAWA)	2	2	2
◉	3	2BC27080	SWITCH,PAPER REMAINING DETECTION	6	6	6
	4	2BC27550	WIRE A,DECK REMAINDER DETECTION	2	2	2
	5	2BC26200	MOUNT A,DECK REMAINING DETECTION	1	1	1
	6	2BC26250	MOUNT,DECK DETECTION	2	2	2
◉	7	2BL27450	SWITCH PI	2	2	2
	8	2BC27770	WIRE,DECK DETECTION	2	2	2
	9	2BC07720	MOUNT,DECK LOCK	1	1	1
	10	2AC07360	HOOK,DUPLEX LOCK	1	1	1
	11	72418140	SPRING, BLADE	1	1	1
	12	77906200	CASSETTE CATCHER	1	1	1
	13	2BC26120	MOUNT,CASSETTE DRAWER	2	2	2
	14	75704300	CATCH FRONT COVER	2	2	2
	15	33927450	RETAINING PIN,DRAWER	4	4	4
	16	J0464080	RECEPTACLE,QR/P15-8S-C(02)(HIROSE)	2	2	2
	17	2BC26190	MOUNT,PAPER SIZE DETECTION	2	2	2
◉	18	66127010	SWITCH,COVER OPEN	2	2	2
	19	2BC27520	REAR WIRE,CASSETTE SWITCH	1	1	1
	20	2BC02150	REAR REINFORCEMENT,BASE	1	1	1
	21	2BC02210	MOUNT,DISPOSAL TANK	1	1	1
	22	2BC26110	MOUNT,DECK CONNECTOR	1	1	1
◉	23	2BC04230	LID,INTERFACE (KM-4530)	1	1	1
	24	34027120	MOUNT BASE,POWER RELAY	1	1	1
◉	25	34027070	RELAY 4P,POWER	1	1	1
	26	M2109010	WIRE SADDLE,WS-2NS	2	2	2
	27	M2109210	LOCKING WIRE SADDLE,LWS-8S-2.5W	1	1	1
	28	2BC27640	WIRE GND,FINISHER (KM-5530)	1	1	1
	29	2AC27880	WIRE FG,FINISHER (KM-5530)	1	1	1
	30	M2109010	WIRE SADDLE,WS-2NS (KM-5530)	2	2	2
	31	2BC26080	MOUNT,POWER SOURCE	1	1	1
◉	32	2BC01040	POWER SOURCE ASS'Y(100)	1		
◉	32	2BC01050	POWER SOURCE ASS'Y(200)		1	1
◉	33	•M1654020	FUSE,237004(LITTEL FUSE)	1		
◉	33	•M1654030	FUSE,218004(LITTLE-FUSE)		1	1
◉	34	•M1658020	FUSE,237008(LITTLE-FUSE)	2		
◉	34	•M1658010	FUSE,218008(LITTEL-FUSE)		2	2
◉	35	•M1661000	FUSE 15A,314015	1		
◉	35	•M1658030	FUSE,215008(LITTEL-FUSE)		1	1
	36	2BC27640	WIRE GND,FINISHER	1	1	1
	37	2AC27880	WIRE FG,FINISHER	1	1	1
	38	2BC27310	WIRE,PRIMARY	1	1	1
	39	2BC27050	RETAINING PIN B,DRAWER	4	4	4
	40	2BC27300	WIRE,MAIN (KM-4530)	1	1	1
	40	2BD27010	WIRE,MAIN (KM-5530)	1	1	1
	41	2BC27580	JUNCTION WIRING,DEHUMIDIFIER HEATER	1	1	1
	42	2BC26220	MOUNT,POWER SOURCE SUPPLY(100)	1		
	42	2BC26240	MOUNT,POWER SOURCE SUPPLY(230)		1	1
	43	77502090	LID FINISHER CABLE	1	1	1
	44	36526440	MOUNT,VENDOR CONNECTOR	1	1	1
	45	36726140	LID,VENDOR	1	1	1
	46	2BC01080	INLET ASS'Y	1		
	46	2BC01090	INLET ASS'Y(200)		1	1
	47	2A627940	CORE 10-20X10	1	1	1
	48	M2104250	EDGING,EDS-17L(KITAGAWA)	3	3	3
	49	2AV27440	CORE 15-26X13	1	1	1
	50	2BC18530	MOUNT,TONER DISPOSAL DRIVE	1	1	1
◉	51	2A005060	LABEL,HIGH VOLTAGE CAUTION(EUR)	1	1	1
	52	2BC10020	TERMINAL BASE,MAIN CHARGER HIGH VOLTAGE	1	1	1
◉	53	36710220	TERMINAL,MAIN HIGH VOLTAGE	1	1	1
	54	2BC27470	WIRE,HIGH VOLTAGE	1	1	1
◉	55	61710610	TERMINAL,GRID CATCHER	1	1	1
	56	2BC27480	WIRE,GRID	1	1	1
	57	2BC18580	UPPER MOUNT,DISPOSAL HOUSING	1	1	1
	58	M2104260	EDGING,EDS-0607U(KITAGAWA)	1	1	1
	59	2BC18510	HOUSING,DISPOSAL	1	1	1
	60	2BC18520	SPRING,DISPOSAL	1	1	1
◉	61	74318070	BUSHING 8,TONER DISPOSAL	1	1	1
◉	62	33973300	STOPPER 7,CARTRIDGE	3	3	3
◉	63	74318080	GEAR 25,TONER DISPOSAL	2	2	2
	64	2BC18540	SHAFT A,CLEANING DISPOSAL	1	1	1
◉	65	61522040	DRIVE GEAR,FIXING SECTION	1	1	1
◉	66	67322230	BUSHING 8	3	3	3
	67	2BC07800	GROUND PLATE A,DECK	1	1	1
	68	2BC07810	GROUND PLATE B,DECK	1	1	1
	69	2BC07820	GROUND PLATE,VERTICAL CONVEYING	1	1	1
	70	2BC02190	SUPPORT PLATE,PRIMARY PAPER FEED DRIVE	2	2	2
◉	71	2A027590	MOTOR,DECK	2	2	2
◉	72	2BC27120	MOTOR B,LIFT CASSETTE	2	2	2
	73	2BC07790	FEED GUIDE,REMAINDER DETECTION	4	4	4
	74	19527400	POWER CORD(120)	1		
	75	2AR27800	POWER CORD(230)		1	
	76	29927231	POWER CODE AS(240)			1
	77	2AV27440	CORE 15-26X13		1	1

• Parts with "•" are component parts or sub-assemblies of the assembly appearing immediately above them.
• Parts with "◉" indicates the Service parts.

• Parts with "• •" are component parts or sub-assembly with "•" appearing immediately above them.

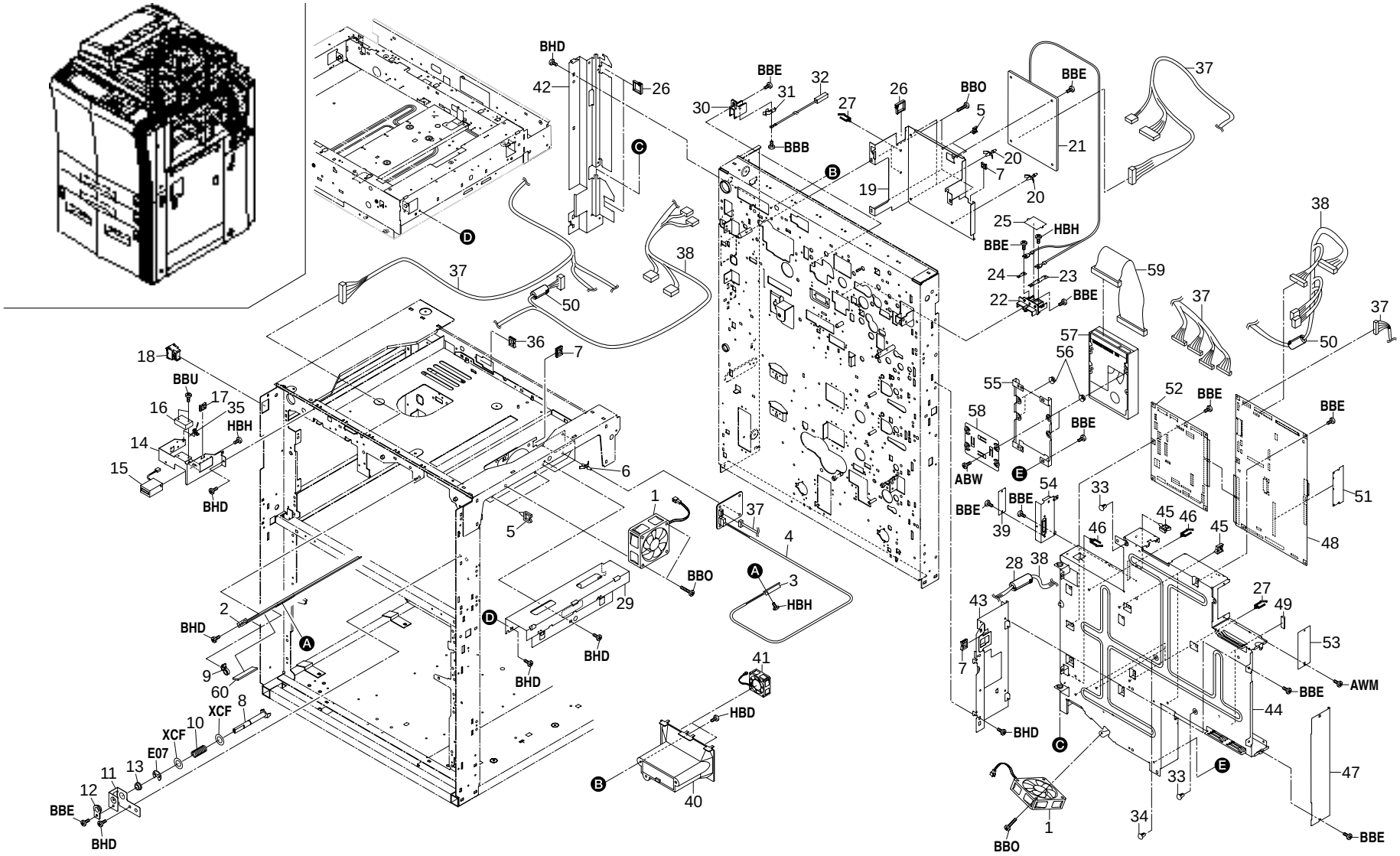
BHD
42
26
BBE
32
31
30
BBB
27
26
BBO
5
BBE
37
21
20
7
20
19
25
HBH
BBE
24
23
22
BBE
59
38
37
50
37
50
37
57
56
55
52
BBE
BBE
58
BBE
ABW
54
33
51
BBE
39
46
45
46
45
48
28
38
43
27
49
53
7
BBE
AWM
44
BHD
47
33
34
BBE
1
BBO
18
BBU
17
16
35
HBH
14
15
BHD
36
7
6
5
1
37
4
BBO
3
HBH
29
BHD
BHD
BHD
2
BHD
9
60
8
XCF
10
XCF
E07
13
11
12
BBE
BHD
41
HBD
40

FIG. 40 ELECTRICAL SECTION II

SP	Ref. No.	Part. No.	Description	Quantity		
				120V	230V	240V
◉	1	2BC27780	FAN,FIXING	2	2	2
	2	2BC10030	MOUNT,POTENTIAL SENSOR	1	1	1
	3	34010301	MOUNT,POTENTIAL SENSOR	1	1	1
◉	4	34093331	PARTS SENSOR SURFACE POTENTIAL(SP)	1	1	1
	5	M2109000	WIRE SADDLE,WS-1NS	4	4	4
	6	M2108000	SPACER,KGLS-3S	4	4	4
	7	M2104210	EDGING,EDS-2	3	3	3
	8	2BC06770	SHAFT,JOINT	1	1	1
	9	M2307010	BINDING BAND,T18R	2	2	2
	10	2AC06400	SPRING,FEED	1	1	1
	11	2BC06780	MOUNT,DIAL FEED	1	1	1
◉	12	74718091	BUSHING CLEANING UNIT	1	1	1
◉	13	67322230	BUSHING 8	1	1	1
	14	2BC04290	MOUNT,SAFETY SWITCH	1	1	1
◉	15	2AC27330	TOTAL COUNTER	1	1	1
◉	16	2BC27800	INTERLOCK SWITCH A	1	1	1
	17	M2104260	EDGING,EDS-0607U(KITAGAWA)	1	1	1
◉	18	2BC27750	SWITCH,MAIN	1	1	1
	19	2BC26090	MOUNT,HIGH VOLTAGE PCB	1	1	1
	20	M2108120	SPACER,KGLS-4S	3	3	3
◉	21	2BC28050	MAIN HIGH VOLTAGE PCB	1	1	1
	22	2BC17130	HOUSING,TRANSFER CONNECTOR	1	1	1
◉	23	34817260	TERMINAL,TRANSFER CONNECTOR	1	1	1
◉	24	34817270	TERMINAL,SEPARATION CONNECTOR	1	1	1
	25	2BC17140	LID,TRANSFER CONNECTOR	1	1	1
	26	M2104280	EDGING,EDS-25L(KITAGAWA)	3	3	3
	27	M2109210	LOCKING WIRE SADDLE,LWS-8S-2.5W	5	5	5
	28	2A627930	CORE 11-25X14	1	1	1
	29	2BC04400	UPPER RIGHT MOUNT,COVER	1	1	1
	30	2AC14080	HOUSING DB,CONNECTOR	1	1	1
◉	31	2AC10210	TERMINAL,GRID CATCH	1	1	1
	32	2BC27440	WIRE,DEVELOPING BIAS	1	1	1
	33	M2108930	SPACER,KGLS-8RT(KITAGAWA)	2	2	2
	34	M2108850	SPACER,KGPS-8RF(KITAGAWA)	1	1	1
	35	M2607010	BINDING BAND,PLT1M	1	1	1
	36	M2104220	EDGING,EDS-1717U	1	1	1
	37	2BC27740	WIRE,ENGINE PCB	1	1	1
	38	2BC27340	WIRE,MAIN PCB	1	1	1
◉	39	2BC04230	LID,INTERFACE	1	1	1
	40	2BC23010	DUCT,COOLING	1	1	1
◉	41	2BC27790	FAN,COOLING	2	2	2
	42	2BC26050	SUPPORT PLATE,SEQUENCE	1	1	1
	43	2BC26060	RETAINER,SEQUENCE	1	1	1
	44	2BC26010	MOUNT,SEQUENCE	1	1	1
	45	M2109010	WIRE SADDLE,WS-2NS	3	3	3
	46	M2109030	WIRE SADDLE,WS-3NS	2	2	2
	47	2BC26070	LID,CONTROLLER	1	1	1
◉	48	2BC01010	MAIN PCB ASS'Y	1	1	1
	49	2BC27860	SHIELD B,GASKET PRINTER		2	2
	50	2AV27430	CORE 8-18X13		2	2
◉	51	2BC27100	IC DIMM	1	1	1
◉	52	2BC01020	ENGINE OUTPUT ASS'Y	1	1	1
	53	2A626120	LID,NIC	1	1	1
	54	2BC26040	MOUNT,INTERFACE	1	1	1
	55	2BC26270	MOUNT,HDD	1	1	1
	56	72114870	V-RING 6 DIA	4	4	4
◉	57	2A027830	UNIT,HDD(S3)	1	1	1
	58	2BC26280	GROUND PLATE,HDD	1	1	1
	59	2BC27510	WIRE,HDD	1	1	1
	60	2BC10060	UPPER SPONGE,POTENTIAL SENSOR	1	1	1

• Parts with "•" are component parts or sub-assemblies of the assembly appearing immediately above them.
• Parts with "◉" indicates the Service parts.

• Parts with "• •" are component parts or sub-assembly with "•" appearing immediately above them.

SERVICE INFORMATION

No. P-2BC-001
02/04/17

MODEL: KM-4530/5530

SUBJECT: Corection of Parts List

DETAILS:

The following parts has been corrected in Parts List .
Use this item number when placing orders.

FIG.40 ELECTRICAL SECTION II

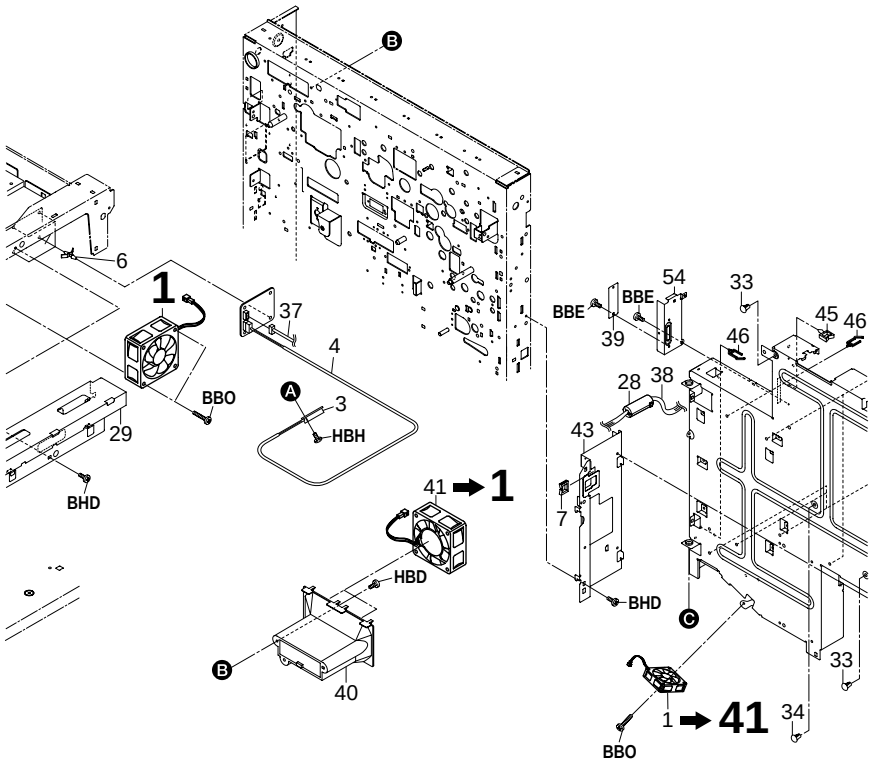

FIG.40 ELECTRICAL SECTION II

SP	Ref.	Part.No.	Description	Qty 120	Qty 230	Qty 240
◉	1	2BC27780	FAN,FIXING	2	2	2
◉	41	2BC27790	FAN,COOLING	2	2	2
◉	**1**	**2BC27780**	**FAN,FIXING**	**3**	**3**	**3**
◉	**41**	**2BC27950**	**FAN,HDD**	**1**	**1**	**1**

FIG. 41 OPERATION SECTION

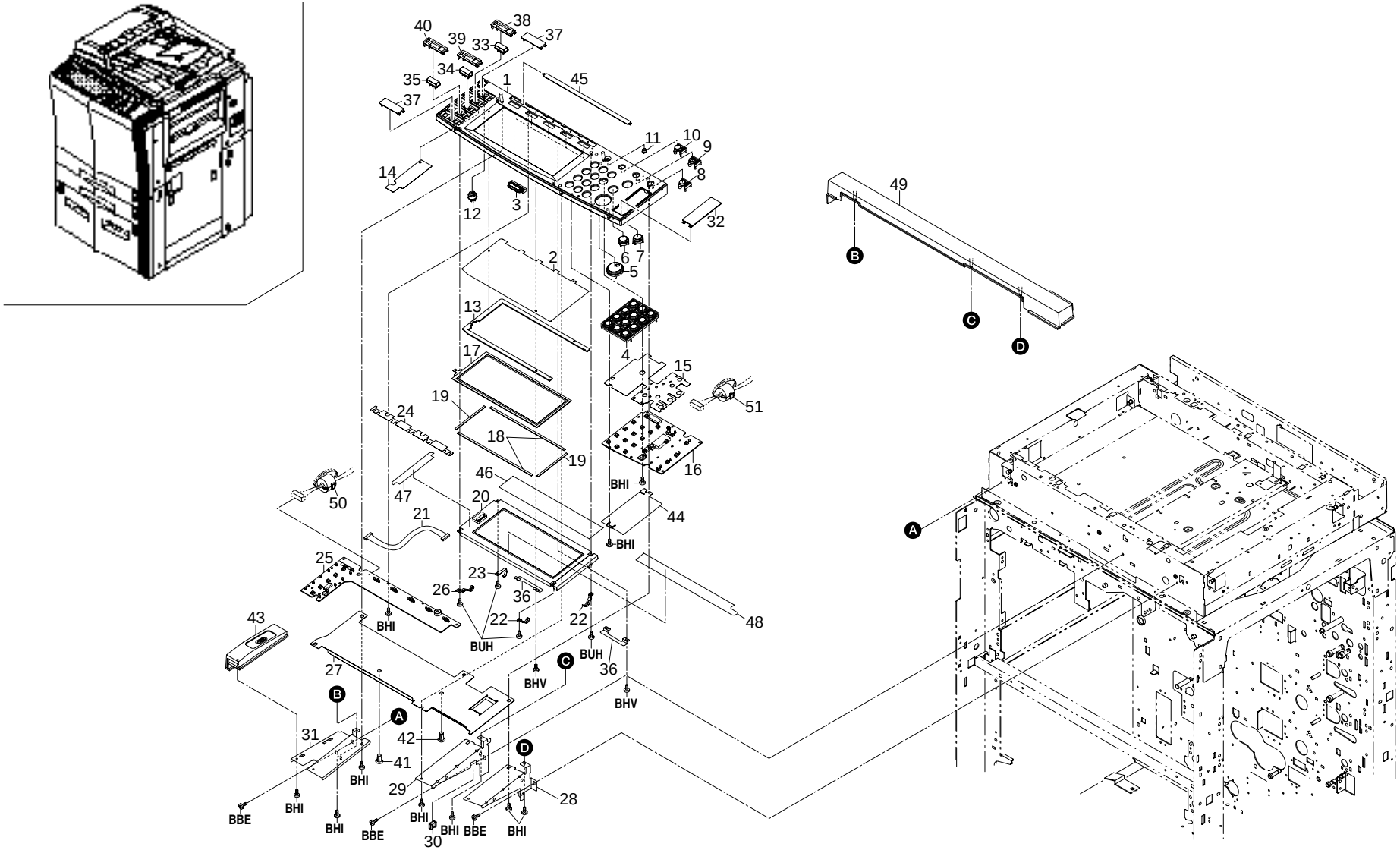

FIG. 41 OPERATION SECTION

2BC/2BD

SP	Ref. No.	Part. No.	Description	Quantity		
				120V	230V	240V
◉	1	2BJ25290	COVER OPE UNIT E	1	1	1
◉	2	2BJ25370	SHEET TABLET	1	1	1
◉	3	2BJ25100	UPPER KEY FUNCTION	5	5	5
◉	4	2BJ25020	KEY OPERATION 10	1	1	1
◉	5	2BJ25300	KEY PRINT E	1	1	1
◉	6	2BJ25040	KEY STOP	1	1	1
◉	7	2BJ25050	KEY RESET	1	1	1
◉	8	2BJ25060	KEY SAVER	1	1	1
◉	9	2BJ25070	KEY INTERRUPT	1	1	1
◉	10	2BJ25080	KEY CONTROL	1	1	1
◉	11	2BJ25090	KEY INIT	1	1	1
◉	12	2BJ25250	VOLUME OPE UNIT	1	1	1
◉	13	2BJ25240	BARRIER TABLET	1	1	1
◉	14	2BJ25230	RIGHT DUST SHIELD	1	1	1
◉	15	2BJ25210	LEFT DUST SHIELD	1	1	1
◉	16	2BJ01071	OPERATION ASS'Y B	1	1	1
◉	17	2BJ27060	TABLET OPERATION	1	1	1
◉	18	2BJ25270	SPONGE LCD A	2	2	2
◉	19	2BJ25280	SPONGE LCD B	2	2	2
◉	20	2BJ28030	LCD PCB	1	1	1
	21	2BJ27140	WIRE LCD	1	1	1
	22	2BJ04220	GROUND PLATE LCD A	2	2	2
	23	2BJ04240	GROUND PLATE LCD C	1	1	1
◉	24	2BJ25220	CENTER DUST SHIELD	1	1	1
◉	25	2BJ01031	OPERATION ASS'Y A	1	1	1
	26	2BJ04230	GROUND PLATE LCD B	1	1	1
	27	2BJ04210	SHIELD LCD	1	1	1
	28	2BC26140	RIGHT MOUNT,OPERATION UNIT	1	1	1
	29	2BC26150	INNER MOUNT,OPERATION UNIT	1	1	1
	30	M2104260	EDGING,EDS-0607U(KITAGAWA)	1	1	1
	31	2BC26160	LEFT MOUNT,OPERATION UNIT	1	1	1
◉	32	2BJ25200	RIGHT LID OPE UNIT	1	1	1
◉	33	2BJ25310	LEFT KEY COPIER E	1	1	1
◉	34	2BJ25320	LEFT KEY PRINTER E	1	1	1
◉	35	2BJ25330	LEFT KEY SCANNER E	1	1	1
	36	2BJ25390	RETAINER LCD	2	2	2
◉	37	2BJ25150	LEFT LID OPE UNIT	2	2	2
◉	38	2BJ25160	LEFT LID COPIER	1	1	1
◉	39	2BJ25170	LEFT LID PRINTER	1	1	1
◉	40	2BJ25180	LEFT LID SCANNER	1	1	1
	41	M2108850	SPACER,KGPS-8RF(KITAGAWA)	1	1	1
	42	M2108880	SPACER,KGPS-5RF(KITAGAWA)	1	1	1
◉	43	2BC04440	LEFT COVER,OPERATION UNIT	1	1	1
	44	2BJ25380	SHEET OPERATION PCB	1	1	1
◉	45	2BC25020	SHEET FUNCTION (EXP)	1	1	1
	46	2BJ25400	SHEET LCD A	1	1	1
	47	2BJ25410	SHEET LCD B	1	1	1
	48	2BJ25420	SHEET LCD C	1	1	1
◉	49	2BC04040	COVER,OPERATION UNIT	1	1	1
	50	2AV27430	CORE 8-18X13	1	1	1
	51	2AV27430	CORE 8-18X13		1	1

• Parts with "•" are component parts or sub-assemblies of the assembly appearing immediately above them.
• Parts with "◉" indicates the Service parts.

• Parts with "• •" are component parts or sub-assembly with "•" appearing immediately above them.

ACCESSORY

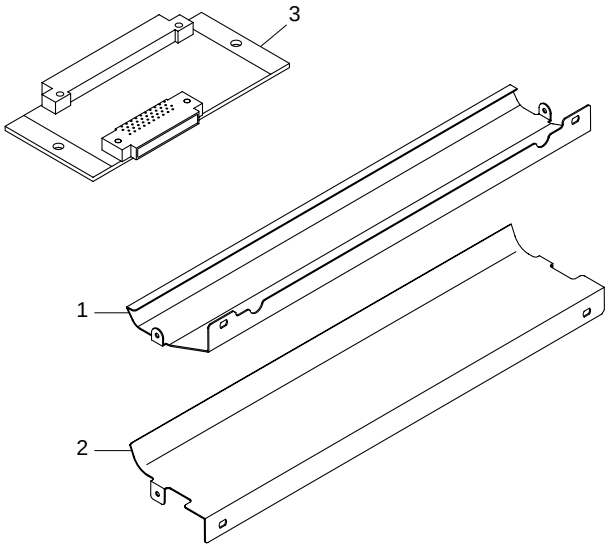

TOOL

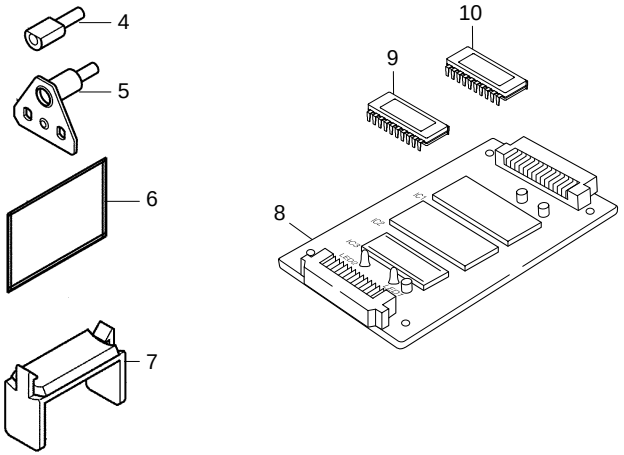

FIG. 42 ACCESSORIES & TOOLS

SP	Ref. No.	Part. No.	Description	Quantity		
				120V	230V	240V
◉	1	2BD60010	UPPER GUIDE,CONFLUENCE	1	1	1
◉	2	2BD60020	LOWER GUIDE,CONFLUENCE	1	1	1
◉	3	2BC60020	JUNCTION PCB ASS'Y	2	2	2
◉	4	18568120	PIN B,POSITIONING	2	2	2
◉	5	2AC68230	SPECIAL TOOL,FRAME RETAINING	2	2	2
◉	6	2AC68241	SHEET,SCANNER ADJUSTMENT	1	1	1
◉	7	35968110	STOPPER WIRE ASS'Y SP	2	2	2
◉	8	35968010	FLASH JIG PCB	1	1	1
◉	9	2BC68150	IC ROM MAIN	1	1	1
◉	10	2BC68160	IC ROM MMI	1	1	1

• Parts with "•" are component parts or sub-assemblies of the assembly appearing immediately above them.
• Parts with "◉" indicates the Service parts.

• Parts with "• •" are component parts or sub-assembly with "•" appearing immediately above them.

KEY COUNTOR

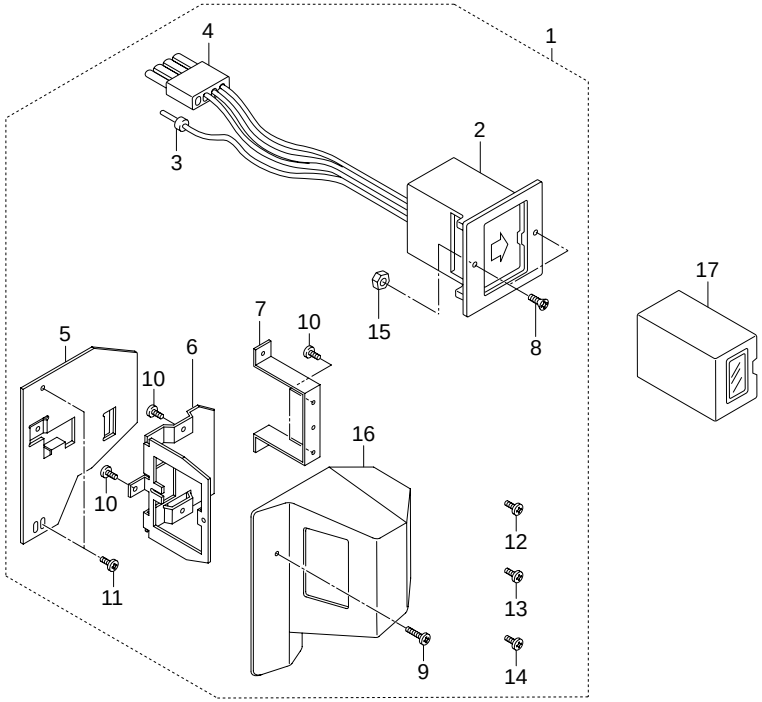

ATTACHMENT MK-1

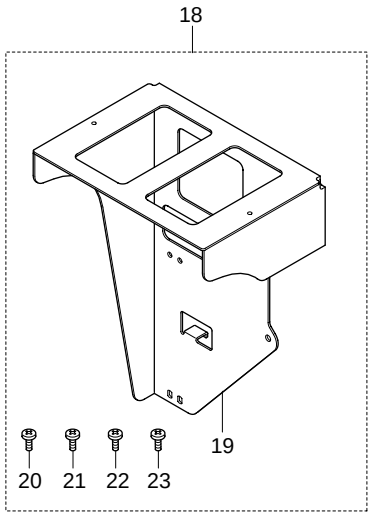

FIG. 43 OPTION

SP	Ref. No.	Part. No.	Description	Quantity		
				120V	230V	240V
◉	1	2A369703	SET PARTS KEYCOUNTER NEW COLOR	1	1	1
	2	•41529210	SOCKET ASS'Y,KEY COUNTER	1	1	1
	3	••J0220040	PLUG EL 4P,ELP-04V	1	1	1
	4	••41525016	SOCKET,KEY COUNTER	2	2	2
	5	•66060022	RETAINER,KEY COUNTER COVER	1	1	1
	6	•66060030	RETAINER,KEY COUNTER	1	1	1
	7	•66060040	MOUNT,KEY COUNTER	1	1	1
	8	•B2303060	COUNTER-SUNK HEAD SCREW BFHM3X6 (BLACK)	2	2	2
	9	•B1304300	BINDING SCREW BVM4X30 (BLACK)	1	1	1
	10	•B4304060	TRIPLE SCREW M4X6 (BLACK)	4	4	4
	11	•B4304100	TRIPLE SCREW M4X10 (BLACK)	2	2	2
	12	•B1303080	BINDING SCREW BVM3X8 (BLACK)	1	1	1
	13	•B4104060	TRIPLE SCREW M4X6(CHROMIUM)	1	1	1
	14	•B4304200	TRIPLE SCREW M4X20(BLACK)	1	1	1
	15	•C2303000	NUT BNM3 (BLACK)	1	1	1
	16	•2A360010	COVER,KEY COUNTER	1	1	1
◉	17	82142540	KEY COUNTER	1	1	1
◉	18	2A382010	SET,ATTACHMENT MK-1	1	1	1
	19	•2A360020	MOUNT MK-1	1	1	1
	20	•B1104120	BINDING SCREW VM4X12 (CR)	4	4	4
	21	•B1104200	BINDING SCREW VM4X20(CR)	1	1	1
	22	•B1243080	BINDING SCREW WITH LOCK TVM3X8	1	1	1
	23	•B4144120	TRIPLE TAP-TITE P SCREW M4X12(CHROMIUM)	2	2	2

• Parts with "•" are component parts or sub-assemblies of the assembly appearing immediately above them.
• Parts with "◉" indicates the Service parts.

• Parts with "• •" are component parts or sub-assembly with "•" appearing immediately above them.

SP	Part. No.	Description	Quantity			Fig. No.
			120V	230V	240V	
◉	18307370	PULLEY 25/18P2M,PAPER FEED	1	1	1	36
◉	18307550	PULLEY 18P2M,LEADING FEED	2	2	2	36
◉	18308260	PULLEY,CONVEYING BELT	2	2	2	18
◉	18314080	PULLEY,MOVING IDLE	2	2	2	10
◉	18327100	SWITCH,SIZE DETECTION	1	1	1	33
◉	18327130	SOLENOID,STOPPER	3	3	3	18,24
	18502160	HANDLE,MACHINE	4	4	4	2
◉	18505180	ORIGINAL SIZE INDICATOR,BYPASS (IN	1			28
◉	18506100	UPPER ROLLER A,FEED	1	1	1	27
	18526211	GROUND PLATE A,NOISE		1	1	10
	18526240	PLATE SPRING A,GROUND REINFORCEMEN		3	3	1
◉	18568120	PIN B,POSITIONING	2	2	2	42
	19518260	SPRING,BLADE	1	1	1	21
	19527400	POWER CORD(120)	1			39
	2AC00700	LSU ADJUSTMENT ASS'Y	1	1	1	12
	2AC02110	MOUNT,RAIL DUPLEX	1	1	1	2
◉	2AC05160	ORIGINAL SIZE INDICATOR,BYPASS(EUR		1	1	28
	2AC06110	LOWER GUIDE,BYPASS	1	1	1	27
	2AC06120	SUPPORT PLATE,LEADING FEED PULLEY	1	1	1	27
	2AC06131	SUPPORT PLATE,SEPARATION PULLEY	1	1	1	27
	2AC06141	LEVER,PE	1	1	1	27
	2AC06150	LEVER,BYPASS SOLENOID	1	1	1	27
	2AC06160	STOPPER,PAPER	1	1	1	27
◉	2AC06230	CLUTCH,RESISTRATION	1	1	1	21
◉	2AC06240	CLUTCH,PAPER FEED	12	12	12	6,7,21,24
	2AC06280	STOPPER,BYPASS TABLE	2	2	2	27
◉	2AC06300	LOWER ROLLER,REGISTRATION	1	1	1	17
◉	2AC06330	FILM,BYPASS PAPER FEED	2	2	2	27
	2AC06400	SPRING,FEED	1	1	1	40
◉	2AC07040	UPPER ROLLER,DUPLEX REGISTRATION	1	1	1	25
◉	2AC07050	GEAR 20/30,DUPLEX REGISTRATION	1	1	1	25
	2AC07120	SUPPORT PLATE,GUIDE TURN OVER FEED	1	1	1	24
◉	2AC07210	LOWER ROLLER,DUPLEX CONVEYING	1	1	1	25
	2AC07220	RIGHT GUIDE,DUPLEX CONVEYING	1	1	1	23
	2AC07231	LEFT GUIDE,DUPLEX CONVEYING	1	1	1	23
◉	2AC07301	ROLLER C,DUPLEX CONVEYING	1	1	1	25
◉	2AC07311	LOWER ROLLER B,DUPLEX CONVEYING	1	1	1	25
	2AC07321	LEFT SUPPORT PLATE,DUPLEX UNIT	1	1	1	23
	2AC07330	RIGHT SUPPORT PLATE,DUPLEX UNIT	1	1	1	23
	2AC07360	HOOK,DUPLEX LOCK	1	1	1	39

SP	Part. No.	Description	Quantity			Fig. No.
			120V	230V	240V	
◉	2AC08160	GROUND PLATE,DRUM DRIVE	1	1	1	22
	2AC08170	PIN,IMAGE FORMATION UNIT	4	4	4	2
◉	2AC08300	LOWER SHIELD,IMAGE FORMATION GUIDE	2	2	2	13
◉	2AC10210	TERMINAL,GRID CATCH	1	1	1	40
	2AC12110	UPPER MIRROR FRAME A,SCANNER	1	1	1	10
	2AC12121	LOWER MIRROR FRAME A,SCANNER	1	1	1	10
	2AC12130	REFLECTOR,SCANNER	1	1	1	10
◉	2AC12140	MIRROR A	1	1	1	10
◉	2AC12150	MIRROR B	2	2	2	10
	2AC12160	MIRROR FRAME B	1	1	1	10
◉	2AC12170	WIRE,SCANNER	1	1	1	10
	2AC12210	SHAFT,SCANNER DRIVE	1	1	1	10
	2AC12230	MOUNT,RELEASE SWITCH	1	1	1	10
	2AC12240	COVER,INVERTER	1	1	1	10
	2AC12250	MOUNT,SCANNER MOTOR	1	1	1	10
	2AC12261	LIGHT SHIELD,PI	1	1	1	10
	2AC12270	GUIDE FFC1	1	1	1	10
	2AC12280	HOLDER,ADF CONTACT GLASS	2	2	2	11
	2AC12300	HOLDER FFC	1	1	1	10
	2AC12360	GUIDE,RELEASE SWITCH	1	1	1	10
	2AC12370	SWITCH,RELEASE DETECTION	1	1	1	10
	2AC12380	SPRING,RELEASE SWITCH	1	1	1	10
	2AC12400	ADJUSTING PLATE B,MIRROR FRAME	1	1	1	10
◉	2AC12420	WIRE S,SCANNER	1	1	1	10
◉	2AC12430	FILM,GLASS DUST SHIELD	1	1	1	11
	2AC12440	GROUND PLATE,INVERTER	1	1	1	10
	2AC13030	PIN,LSU ADJUSTMENT	1	1	1	12
	2AC13040	MOUNT,LSU ADJUSTMENT	1	1	1	12
	2AC14080	HOUSING DB,CONNECTOR	1	1	1	40
	2AC14150	SPRING,DOCTOR BLADE ADJUSTMENT	1	1	1	13
◉	2AC14560	FILTER,DEVELOPING DUCT	1	1	1	22
◉	2AC16180	FAN,CONVEYING	1	1	1	16
◉	2AC16190	UNIT,CLEANING MOTOR	2	2	2	9,20
◉	2AC17060	TERMINAL,TRANSFER CHARGER	2	2	2	20
	2AC18300	SPRING,CLEANING	1	1	1	21
◉	2AC21250	STATIC ELIMINATOR,EJECT	1	1	1	26
	2AC21630	LEVER A,FEED SHIFT SOLENOID	1	1	1	18
◉	2AC21650	PULLEY 22,FEED SHIFT	1	1	1	18
◉	2AC22170	CLUTCH 35,FEED	1	1	1	22
	2AC22360	COLLAR,DRUM SHAFT	1	1	1	22

• Parts with "◉" indicates the Service parts.

SP	Part. No.	Description	Quantity			Fig. No.
			120V	230V	240V	
◉	2AC22460	GEAR 40,FEED	4	4	4	21,24,27
◉	2AC22490	GEAR 63/35,DRUM	1	1	1	22
◉	2AC22500	MOTOR,MAIN	2	2	2	22
◉	2AC22600	GEAR 39/25,BYPASS	2	2	2	22
◉	2AC22620	PULLEY 40/28,CLEANING DRIVE	1	1	1	22
	2AC26320	HOLDER,GROUND	3	3	3	1
◉	2AC27330	TOTAL COUNTER	1	1	1	40
	2AC27650	WIRE,BYPASS TRAY	1	1	1	28
	2AC27800	WIRE,SCANNER INVERTER	1	1	1	10
	2AC27880	WIRE FG,FINISHER	2	2	2	39
◉	2AC68230	SPECIAL TOOL,FRAME RETAINING	2	2	2	42
◉	2AC68241	SHEET,SCANNER ADJUSTMENT	1	1	1	42
◉	2AD05060	LABEL,DUPLEX COVER	1	1	1	23
	2AR07180	RETAINER M4	4	4	4	1,3,14
	2AR09200	MOUNT M3A	2	2	2	14
◉	2AR12200	FILM,FFC	1	1	1	10
	2AR18240	CLAW,SEPARATION	2	2	2	14
	2AR18260	PULLEY,CLAW SEPARATION	2	2	2	14
	2AR18280	SPRING,CLAW SEPARATION	2	2	2	14
◉	2AR18380	BUSHING,CLEANING	1	1	1	14
◉	2AR27031	LAMP,CLEANING LAMP	1	1	1	9
	2AR27800	POWER CORD(230)		1		39
◉	2AS07010	PULLEY 32,VERTICAL CONVEYING	1	1	1	22
◉	2AV12450	SLIDER,SCANNER	8	8	8	10
◉	2AV12460	REAR ORIGINAL SIZE INDICATOR(METRI		1	1	11
◉	2AV12470	REAR ORIGINAL SIZE INDICATOR(INCH)	1			11
◉	2AV12481	LABEL,ORIGINAL SIZE INDICATOR(METR		1	1	11
◉	2AV12491	LABEL,ORIGINAL SIZE INDICATOR(INCH	1			11
	2AV27430	CORE 8-18X13	1	4	4	40,41
	2AV27440	CORE 15-26X13	1	2	2	39
◉	2A000091	DUPLEX UNIT ASS'Y	1	1	1	23,24,25
	2A002170	CASTER,UA	4	4	4	2
	2A004200	HINGE,TONER SUPPLY	1	1	1	29
	2A004210	HOLDER,HINGE	2	2	2	29
◉	2A005060	LABEL,HIGH VOLTAGE CAUTION(EUR)	4	4	4	1,16,22
						39
	2A010020	SHIELD,MAIN CHARGER	1	1	1	9
	2A010030	INNER SHIELD,MC	1	1	1	9
	2A010060	FRONT POSITIONING PLATE,MAIN CHARG	1	1	1	8
	2A010081	SPIRAL,CHARGER CLEANING	2	2	2	9,20
	2A010140	PULLEY,MAIN CHARGER ADJUSTMENT	1	1	1	9

SP	Part. No.	Description	Quantity			Fig. No.
			120V	230V	240V	
	2A010150	MOVING BASE,MAIN CHARGER ADJUSTMEN	1	1	1	9
	2A010180	PAD,MC WIRE CLEANING	2	2	2	9
◉	2A012060	MOTOR,SCANNER	1	1	1	10
	2A012130	MOUNT,SCANNER PULLEY	2	2	2	10
◉	2A015080	SPONGE A,HOPPER HOUSING	2	2	2	29
	2A015120	FILM A,HOPPER HOUSING	1	1	1	29
	2A015130	FILM B,HOPPER HOUSING	3	3	3	29
	2A015170	FILTER A,HOPPER	1	1	1	29
	2A015180	FILTER B,HOPPER	1	1	1	29
	2A015190	FILM,HOPPER FILTER	1	1	1	29
◉	2A015200	SPONGE E,HOPPER HOUSING	2	2	2	29
	2A015240	UPPER SPONGE,HOPPER HOUSING	2	2	2	29
	2A017010	FRONT FRAME,DUPLEX	1	1	1	23
	2A017020	REAR FRAME,DUPLEX	1	1	1	23
	2A017030	MOUNT B,FEED SHIFT SOLENOID	1	1	1	24
	2A017040	GUIDE,MIDDLE TRAY	1	1	1	24
	2A017050	UPPER GUIDE,DUPLEX ADMISSION	1	1	1	24
	2A017060	GUIDE,DUPLEX REFEED	1	1	1	24
	2A017070	MOUNT,REFEED PULLEY	1	1	1	24
	2A017100	SHAFT D,REFEED ROLLER	1	1	1	25
	2A017110	SHAFT,REFEED PULLEY	1	1	1	24
	2A017120	GUIDE,TURN OVER FEED SHIFT	1	1	1	24
	2A017140	UPPER GUIDE,DUPLEX CONVEYING	1	1	1	23
	2A017150	SHAFT D,DUPLEX DRIVE	1	1	1	25
	2A017160	SHAFT,DUPLEX CONVEYING	1	1	1	24
◉	2A017170	ROLLER,SWITCHBACK DUPLEX	1	1	1	25
	2A017180	SHAFT,DUPLEX CLUTCH	2	2	2	24
	2A017190	MOUNT,SWITCHBACK DRIVE	1	1	1	24
	2A017200	LEVER,SWITCHBACK RELEASE	2	2	2	24
	2A017210	MOUNT,SWITCHBACK RELEASE SOLENOID	1	1	1	24
	2A017230	AUXILIARY PLATE,DUPLEX POSITION	1	1	1	23
◉	2A020330	FELT,CLEANING	1	1	1	19
◉	2A020340	LOWER ROLLER,CLEANING	1	1	1	19
	2A020370	SPRING,PRESSURE	2	2	2	19
	2A022080	RETAINER,FLYWHEEL	1	1	1	22
	2A022340	LEVER,FIXING CLEANING DRIVE	1	1	1	21
	2A026180	GROUND PLATE,SCANNER FRAME	4	10	10	10
	2A027400	WIRE,DUPLEX UNIT	1	1	1	23
◉	2A027570	SWITCH,DUPLEX CONVEYING	2	2	2	24
◉	2A027590	MOTOR,DECK	2	2	2	39

• Parts with "◉" indicates the Service parts.

SP	Part. No.	Description	Quantity			Fig. No.
			120V	230V	240V	
◉	2A027830	UNIT,HDD(S3)	1	1	1	40
◉	2A068171	GRID ASS'Y	1	1	1	9
◉	2A068220	MC CLEANING PAD ASS'Y	2	2	2	9
◉	2A068240	WIRE,MAIN CHARGER	1	1	1	9
	2A105180	LABEL,CAUTION CONTACT GLASS	1	1	1	10
◉	2A304190	COPY TRAY(EXP)	1	1	1	1
◉	2A305070	LEFT ORIGINAL SIZE INDICATOR	1	1	1	11
◉	2A306010	FRONT CURSOR,BYPASS	1	1	1	28
◉	2A306020	REAR CURSOR,BYPASS	1	1	1	28
	2A312020	MOUNT BASE,ORIGINAL DETECTION SENS	2	1	1	10
◉	2A327010	SENSOR,HUMIDITY	1	1	1	3
	2A327360	WIRE,ORIGINAL SIZE DETECTION(METRI		1	1	10
	2A327400	WIRE A,SCANNER DRIVE	1	1	1	10
	2A360010	COVER,KEY COUNTER	1	1	1	43
	2A360020	MOUNT MK-1	1	1	1	43
◉	2A369703	SET PARTS KEYCOUNTER NEW COLOR	1	1	1	43
◉	2A382010	SET,ATTACHMENT MK-1	1	1	1	43
	2A626120	LID,NIC	1	1	1	40
	2A627930	CORE 11-25X14	1	1	1	40
	2A627940	CORE 10-20X10	1	1	1	39
◉	2A727480	HEATER,DEHUMIDIFIER(120)	3			2
◉	2A727490	HEATER,DEHUMIDIFIER(240)		3	3	2
◉	2BC01010	MAIN PCB ASS'Y	1	1	1	40
◉	2BC01020	ENGINE OUTPUT ASS'Y	1	1	1	40
◉	2BC01040	POWER SOURCE ASS'Y(100)	1			39
◉	2BC01050	POWER SOURCE ASS'Y(200)		1	1	39
◉	2BC01070	SCANNER DRIVE PCB ASS'Y	1	1	1	10
	2BC01080	INLET ASS'Y	1			39
	2BC01090	INLET ASS'Y(200)		1	1	39
	2BC02100	LOWER LEFT REINFORCEMENT	1	1	1	2
	2BC02120	UPPER REINFORCEMENT,DECK	1	1	1	2
	2BC02130	FRONT MOUNT,HANDLE	2	2	2	2
	2BC02140	REAR MOUNT,HANDLE	2	2	2	2
	2BC02150	REAR REINFORCEMENT,BASE	1	1	1	39
	2BC02170	UPPER PARTITION,FIXING	1	1	1	2
	2BC02180	INNER LEFT REINFORCEMENT	1	1	1	3
	2BC02190	SUPPORT PLATE,PRIMARY PAPER FEED D	2	2	2	39
	2BC02210	MOUNT,DISPOSAL TANK	1	1	1	39
	2BC02230	SHIELD,CONVEYING DUCT	1	1	1	2
	2BC02240	SHIELD PLATE,BASE	1	1	1	2

SP	Part. No.	Description	Quantity			Fig. No.
			120V	230V	240V	
◉	2BC04010	FRONT COVER	1	1	1	1
◉	2BC04020	UPPER RIGHT FRONT COVER	1	1	1	1
◉	2BC04030	LOWER RIGHT FRONT COVER	1	1	1	1
◉	2BC04040	COVER,OPERATION UNIT	1	1	1	41
◉	2BC04050	UPPER RIGHT COVER	1	1	1	1
◉	2BC04070	RIGHT COVER,MIDDLE	1	1	1	1
◉	2BC04080	LOWER FRONT RIGHT COVER	1	1	1	1
◉	2BC04090	LOWER REAR RIGHT COVER	1	1	1	1
◉	2BC04100	UPPER LEFT COVER	1	1	1	1
◉	2BC04110	LEFT COVER,MIDDLE	1	1	1	1
◉	2BC04120	LOWER LEFT COVER	1	1	1	1
◉	2BC04130	UPPER REAR COVER	1	1	1	1
◉	2BC04150	REAR COVER A,MIDDLE	1	1	1	1
◉	2BC04160	LOWER REAR COVER	1	1	1	1
◉	2BC04180	LOWER INNER RIGHT COVER	1	1	1	1
◉	2BC04190	INNER COVER	1	1	1	1
◉	2BC04200	RIGHT INNER COVER	1	1	1	16
◉	2BC04210	RIGHT COVER,CONVEYING	1	1	1	16
◉	2BC04220	LEFT COVER,CONVEYING	1	1	1	16
◉	2BC04230	LID,INTERFACE	2	2	2	39,40
◉	2BC04240	LID,TONER SUPPLY	1	1	1	29
	2BC04250	FRONT MOUNT,COVER HINGE	1	1	1	1
	2BC04260	FRONT HINGE,COVER MACHINE	1	1	1	1
	2BC04270	FRONT HINGE A,COVER	1	1	1	1
	2BC04280	FRONT HINGE B,COVER	1	1	1	1
	2BC04290	MOUNT,SAFETY SWITCH	1	1	1	40
◉	2BC04300	LID,DEVELOPING DUCT	1	1	1	1
◉	2BC04310	COVER,CASSETTE	2	2	2	3
◉	2BC04330	COVER A,DECK	1	1	1	4
	2BC04340	MOUNT A,DECK COVER	1	1	1	4
◉	2BC04350	COVER B,DECK	1	1	1	5
	2BC04360	MOUNT B,DECK COVER	1	1	1	5
	2BC04370	LOWER MOUNT,MAGNET	1	1	1	1
◉	2BC04380	HANDLE,DECK	2	2	2	4,5
	2BC04390	PIN,HINGE STOP	1	1	1	1
	2BC04400	UPPER RIGHT MOUNT,COVER	1	1	1	40
◉	2BC04410	REAR COVER B,MIDDLE	1	1	1	1
◉	2BC04420	REAR COVER C,MIDDLE	1	1	1	1
◉	2BC04430	LID,CONVEYING DUCT	1	1	1	1
◉	2BC04440	LEFT COVER,OPERATION UNIT	1	1	1	41

• Parts with "◉" indicates the Service parts.

SP	Part. No.	Description	Quantity			Fig. No.
			120V	230V	240V	
	2BC04450	LOWER RIGHT FRONT MOUNT,COVER	2	2	2	1
◉	2BC04460	COVER,DUPLEX UNIT	1	1	1	23
	2BC04470	LOWER REAR RIGHT MOUNT,COVER	1	1	1	1
	2BC04480	LEFT COVER,IMAGE FORMATION	1	1	1	1
	2BC04490	REAR MOUNT C,MIDDLE COVER	1	1	1	1
	2BC04500	FRONT ADJUSTING PLATE,COVER	1	1	1	1
	2BC04510	LOWER REAR RIGHT RETAINING PIN,COV	4	4	4	1,6,14
	2BC04520	LOWER REAR RIGHT SPONGE,COVER	1	1	1	1
◉	2BC04530	FRONT MAGNET,COVER	1	1	1	1
	2BC04540	UPPER SPONGE,FEED(EUR)	1	1	1	27
	2BC04550	LOWER SPONGE,FEED(EUR)	1	1	1	27
	2BC04560	VIBRATION INSULATOR,FEED(EUR)	1	1	1	27
	2BC04570	LOWER LEFT SPONGE,COVER(EUR)		1		1
	2BC04580	LEFT SPONGE A,MIDDLE COVER(EUR)		1		1
	2BC04590	LEFT SPONGE B,MIDDLE COVER(EUR)		3		1
	2BC04600	REAR SPONGE,COVER	2	2	2	1
◉	2BC05040	LABEL,JAM REMOVEMENT PAPER FEED(EU	1	1	1	29
◉	2BC05050	LABEL,TONER SUPPLY OPERATION(EUR)	1	1	1	1
◉	2BC05060	LABEL,DECK CONVEYING COVER	1	1	1	6
◉	2BC05070	LABEL,HIGH TEMPERATURE CAUTION	1	1	1	16
◉	2BC05110	LABEL 1,JAM RELEASE	1	1	1	16
◉	2BC05120	LABEL 2,JAM RELEASE	1	1	1	16
◉	2BC05130	LABEL 3,JAM RELEASE	1	1	1	16
	2BC05140	LABEL,FIXING EJECT RELEASE	1	1	1	26
	2BC05150	LABEL,UNIT REPLACEMENT	4	4	4	9,13,14,19
	2BC05180	LABEL,FEED SHIFT RELEASE	1	1	1	18
	2BC05220	LABEL,PAPER SUPPLY OPERATION	2	2	2	4,5
	2BC06010	UPPER HOUSING,PAPER FEED	3	3	3	7
	2BC06020	LOWER HOUSING,PAPER FEED	3	3	3	7
◉	2BC06030	TABLE A,BYPASS	1	1	1	28
◉	2BC06040	TABLE B,BYPASS	1	1	1	28
◉	2BC06050	TABLE C,BYPASS	1	1	1	28
◉	2BC06060	TABLE D,BYPASS	1	1	1	28
	2BC06070	UPPER GUIDE,CONFLUENCE	1	1	1	28
	2BC06080	LOWER GUIDE,CONFLUENCE	1	1	1	28
	2BC06090	WORK PLATE,LIFT CASSETTE	2	2	2	3
	2BC06100	REAR FRAME,BYPASS	1	1	1	27
	2BC06110	SHAFT,BYPASS PAPER FEED	1	1	1	27
◉	2BC06120	COVER,VERTICAL CONVEYING	1	1	1	28
	2BC06130	GUIDE,VERTICAL CONVEYING	1	1	1	28

SP	Part. No.	Description	Quantity			Fig. No.
			120V	230V	240V	
	2BC06140	RIGHT SHAFT,FEED RELEASE	1	1	1	28
	2BC06150	SHAFT,VERTICAL CONVEYING FULCRUM	1	1	1	28
◉	2BC06160	RIGHT HANDLE,FEED RELEASE	1	1	1	28
	2BC06190	MOUNT,INTERLOCK SWITCH	1	1	1	2
	2BC06220	UPPER GUIDE,FEED	1	1	1	27
	2BC06230	GUIDE,FEED MIDDLE	1	1	1	27
	2BC06240	LOWER GUIDE,FEED	1	1	1	27
	2BC06250	FRAME,FEED	1	1	1	27
◉	2BC06260	ROLLER B,FEED	1	1	1	27
◉	2BC06270	LOWER ROLLER A,FEED	1	1	1	27
	2BC06280	REINFORCEMENT,FEED	1	1	1	27
	2BC06290	GUIDE FILM,FEED MIDDLE	1	1	1	27
	2BC06300	SUPPORT PLATE,LEADING FEED PULLEY	4	4	4	6,7
	2BC06310	FRONT FRAME,PAPER FEED	3	3	3	7
	2BC06320	REAR FRAME,PAPER FEED	3	3	3	7
	2BC06340	UPPER SHAFT,PAPER FEED	3	3	3	7
	2BC06350	UPPER REINFORCEMENT,HOUSING PAPER	3	3	3	7
	2BC06360	LOWER REINFORCEMENT,HOUSING PAPER	3	3	3	7
◉	2BC06380	ACTUATOR,PAPER EMPTY	4	4	4	6,7
◉	2BC06390	ROLLER C,FEED	3	3	3	7
◉	2BC06400	ROLLER D,FEED	1	1	1	7
	2BC06430	LEFT GUIDE,FEED	4	4	4	7
	2BC06440	RIGHT MOUNT,FEED FULCRUM	2	2	2	28
	2BC06450	RIGHT SHAFT,FEED FULCRUM	2	2	2	28
	2BC06460	GUIDE,CONFLUENCE	3	3	3	7
	2BC06470	FULCRUM PLATE,VERTICAL CONVEYING	2	2	2	28
	2BC06480	DETECTION PLATE,HINGE INTERLOCK	1	1	1	28
	2BC06490	RIGHT MOUNT,RAIL	2	2	2	3
	2BC06500	RIGHT REINFORCEMENT	2	2	2	3
	2BC06530	SUPPORT PLATE,PAPER FEED CLUTCH	3	3	3	7
	2BC06540	LEFT MOUNT,RAIL	2	2	2	3
	2BC06550	FRONT STAY,CASSETTE	2	2	2	3
◉	2BC06560	COVER,INTERLOCK	1	1	1	7
	2BC06570	FRONT MOUNT,BYPASS TABLE	1	1	1	28
	2BC06580	REAR MOUNT,BYPASS TABLE	1	1	1	28
◉	2BC06590	DIAL,FEED	1	1	1	16
	2BC06600	MOUNT,VERTICAL CONVEYING HOOK	1	1	1	28
	2BC06610	SPRING,VERTICAL CONVEYING HOOK	1	1	1	28
	2BC06620	FULCRUM PLATE,BYPASS TABLE	2	2	2	28
	2BC06630	RAIL C,CURSOR	2	2	2	3

• Parts with "◉" indicates the Service parts.

SP	Part. No.	Description	Quantity			Fig. No.
			120V	230V	240V	
	2BC06640	LID,PAPER SIZE DETECTION	2			3
	2BC06650	DETECTION PLATE,PAPER SIZE	2			3
	2BC06660	PLATE SPRING,GUIDE CONFLUENCE	2	2	2	7
	2BC06670	UPPER PLATE SPRING,GUIDE CONFLUENC	1	1	1	7
	2BC06700	CASSETTE	2	2	2	3
	2BC06710	SHAFT,LIFT CASSETTE	2	2	2	3
	2BC06720	RAIL A,CURSOR	2	2	2	3
◉	2BC06730	CURSOR A,CASSETTE	2	2	2	3
◉	2BC06740	CURSOR B,CASSETTE	2	2	2	3
	2BC06750	RACK,CURSOR	6	6	6	3,28
◉	2BC06760	GEAR,JOINT	1	1	1	27
	2BC06770	SHAFT,JOINT	1	1	1	40
	2BC06780	MOUNT,DIAL FEED	1	1	1	40
◉	2BC06790	UPPER GEAR,PAPER FEED	4	4	4	6,7
	2BC06800	HOLDER,VERTICAL CONVEYING	2	2	2	7
◉	2BC06810	PULLEY,LEADING FEED	4	4	4	6,7
	2BC06820	LOWER SHAFT,PAPER FEED	3	3	3	7
	2BC06830	FRONT FRAME,BYPASS	1	1	1	27
	2BC06850	LOWER MOUNT,PAPER FEED	1	1	1	7
	2BC06860	FULCRUM PLATE,GUIDE CONFLUENCE	3	3	3	7
◉	2BC06870	PULLEY,FEED	10	10	10	27,28
	2BC06880	STAY,VERTICAL CONVEYING	1	1	1	28
	2BC06890	HINGE B,VERTICAL CONVEYING	1	1	1	28
◉	2BC06900	PULLEY,PAPER FEED	4	4	4	6,7
	2BC06920	PROTECTING PLATE,PAPER FEED DRIVE	1	1	1	3
	2BC06930	PROTECTING PLATE,PAPER FEED UNIT D	3	3	3	7
	2BC06940	GUIDE FILM,BYPASS PAPER FEED	1	1	1	27
◉	2BC06950	SPRING,CURSOR	4	4	4	3
	2BC07010	SHAFT,LIFT DRIVE	2	2	2	4,5
◉	2BC07020	FRONT PULLEY,LIFT DRIVE	4	4	4	4,5
◉	2BC07030	DAMPER,DECK LIFT PLATE	2	2	2	4,5
	2BC07040	HOLDER,WIRE	4	4	4	4,5
◉	2BC07050	PULLEY,LIFT WIRE	10	10	10	4,5
	2BC07060	HOLDER,WIRE PULLEY	10	10	10	4,5
	2BC07070	BASE A,DECK	1	1	1	4
	2BC07080	FRONT FRAME A,DECK	1	1	1	4
	2BC07090	REAR FRAME A,DECK	1	1	1	4
	2BC07100	MOUNT,DECK DAMPER	2	2	2	4,5
◉	2BC07110	GEAR 20	2	2	2	4,5
	2BC07120	SPACER,DECK LIFT	4	4	4	4,5

SP	Part. No.	Description	Quantity			Fig. No.
			120V	230V	240V	
	2BC07130	ACTUATOR A,REMAINING DETECTION	1	1	1	4
	2BC07140	FRONT CURSOR A,DECK	1	1	1	4
	2BC07150	REAR CURSOR A,DECK	1	1	1	4
	2BC07160	STOPPER A,TRAILING EDGE HOLDER DEC		1	1	4
	2BC07170	LIFT PLATE,DECK	2	2	2	4,5
◉	2BC07180	RIGHT WIRE A,LIFT	2	2	2	4
◉	2BC07190	RIGHT WIRE B,LIFT	2	2	2	4
	2BC07210	SPACER,DECK LEADING FEED	2	2	2	6
	2BC07220	BASE B,DECK	1	1	1	5
	2BC07230	FRONT FRAME B,DECK	1	1	1	5
	2BC07240	REAR FRAME B,DECK	1	1	1	5
	2BC07250	PAD,LIFT	2	2	2	4,5
	2BC07280	ADJUSTING PLATE A,DECK	1	1	1	4
	2BC07290	FRONT CURSOR B,DECK	1	1	1	5
	2BC07300	REAR CURSOR B,DECK	1	1	1	5
	2BC07310	STOPPER B,TRAILING EDGE HOLDER DEC		1	1	5
◉	2BC07330	LEFT WIRE A,LIFT	2	2	2	5
◉	2BC07340	LEFT WIRE B,LIFT	2	2	2	5
	2BC07370	MOUNT,DECK RETARD PULLEY	1	1	1	6
	2BC07380	SPRING 400,DECK RETARD	2	2	2	6
◉	2BC07390	RIGHT ROLLER,DECK CONVEYING	1	1	1	6
◉	2BC07400	LEFT ROLLER,DECK CONVEYING	1	1	1	6
◉	2BC07410	BELT,DECK CONVEYING	1	1	1	6
	2BC07420	UPPER GUIDE,DECK PAPER FEED	1	1	1	6
	2BC07430	LOWER GUIDE,DECK PAPER FEED	1	1	1	6
	2BC07440	UPPER GUIDE,DECK CONVEYING	1	1	1	6
	2BC07450	LOWER GUIDE,DECK CONVEYING	1	1	1	6
	2BC07460	MOUNT B,PE SWITCH DECK	1	1	1	6
	2BC07470	ACTUATOR B,REMAINING DETECTION	1	1	1	5
◉	2BC07480	COVER,DECK CONVEYING	1	1	1	6
◉	2BC07490	GEAR 27/45,DECK	1	1	1	6
	2BC07500	LEFT MOUNT,DECK CONVEYING SLIDER	1	1	1	2
	2BC07510	RIGHT MOUNT,DECK CONVEYING SLIDER	1	1	1	2
◉	2BC07520	UPPER PULLEY,DECK CONVEYING	4	4	4	6
	2BC07540	SPRING,DECK CONVEYING PULLEY	1	1	1	6
	2BC07560	SHAFT,DECK PAPER FEED	1	1	1	6
	2BC07570	SHAFT,RETARD SUPPORT PLATE	1	1	1	6
	2BC07580	SHAFT,DECK RETARD	1	1	1	6
	2BC07590	SHAFT,DECK CONVEYING PULLEY	2	2	2	6
◉	2BC07600	FILM,DECK RETARD	1	1	1	6

• Parts with "◉" indicates the Service parts.

SP	Part. No.	Description	Quantity			Fig. No.
			120V	230V	240V	
	2BC07610	SPONGE,DECK CONVEYING	2	2	2	6
	2BC07620	FRONT FRAME,DECK CONVEYING	1	1	1	6
	2BC07630	REAR FRAME,DECK CONVEYING	1	1	1	6
	2BC07640	UPPER GUIDE,DECK CONFLUENCE	1	1	1	7
◉	2BC07660	SLIDER,DECK CONVEYING	2	2	2	2
	2BC07670	RIGHT MOUNT,SLIDER DECK	2	2	2	2
◉	2BC07680	SLIDER,DECK	6	6	6	2,3
	2BC07700	LEFT MOUNT,SLIDER DECK	2	2	2	2
	2BC07720	MOUNT,DECK LOCK	1	1	1	39
	2BC07730	LEFT MOUNT,DECK MACHINE	1	1	1	2
	2BC07740	LEFT MOUNT A,DECK MACHINE	1	1	1	2
	2BC07750	RIGHT MOUNT A,DECK MACHINE	1	1	1	2
	2BC07760	ADJUSTING PLATE B,DECK	1	1	1	5
	2BC07770	LEFT STAY,DECK CONVEYING	1	1	1	6
	2BC07780	RIGHT STAY,DECK CONVEYING	1	1	1	6
	2BC07790	FEED GUIDE,REMAINDER DETECTION	4	4	4	39
	2BC07800	GROUND PLATE A,DECK	1	1	1	39
	2BC07810	GROUND PLATE B,DECK	1	1	1	39
	2BC07820	GROUND PLATE,VERTICAL CONVEYING	2	2	2	28,39
	2BC07830	GROUND PLATE,CASSETTE	2	2	2	3
	2BC07840	TENSION PLATE,DECK CONVEYING	1	1	1	6
	2BC07850	MOUNT B,PE ACTUATOR	1	1	1	6
	2BC07860	TERMINAL,PAPER SIZE DETECTION	3	1	1	3,28
◉	2BC07870	SPRING A,DECK CONVEYING PULLEY	1	1	1	6
◉	2BC07880	GEAR 15,JOINT	1	1	1	6
	2BC07890	PROTECTING PLATE,DECK DAMPER	1	1	1	5
	2BC07900	REINFORCEMENT,GUIDE HANDLE	1	1	1	6
	2BC08010	FRONT RETAINER,DRUM	1	1	1	8
	2BC08020	REAR RETAINER,DRUM	1	1	1	8
	2BC08030	FRONT FRAME,IMAGE FORMATION	1	1	1	8
	2BC08040	REAR FRAME,IMAGE FORMATION	1	1	1	8
	2BC08050	FRONT REINFORCEMENT,IMAGE FORMATIO	1	1	1	8
	2BC08060	REAR REINFORCEMENT,IMAGE FORMATION	1	1	1	8
	2BC08070	RIGHT REINFORCEMENT,IMAGE FORMATIO	1	1	1	8
	2BC08080	LEFT REINFORCEMENT,IMAGE FORMATION	1	1	1	8
	2BC08090	MOUNT,IMAGE FORMATION SLIDER	1	1	1	2
◉	2BC08100	SLIDER,IMAGE FORMATION	2	2	2	2
	2BC08110	TERMINAL,BIAS JOINT	1	1	1	8
	2BC08120	TERMINAL BASE,DEVELOPING BIAS	1	1	1	8
	2BC08130	SPRING,IMAGE FORMATION HOOK	1	1	1	22
	2BC08140	HOOK,IMAGE FORMATION RETAINING	1	1	1	22
	2BC08150	FRONT MOUNT BASE PCL	1	1	1	8
	2BC08160	REAR MOUNT BASE PCL	1	1	1	8
	2BC08170	LEFT MOUNT,IMAGE FORMATION SLIDER	1	1	1	2
◉	2BC08500	UPPER ROLLER,REGISTRATION	1	1	1	8
◉	2BC08520	UPPER GUIDE,REGISTRATION	1	1	1	8
	2BC08600	UPPER FRONT GUIDE,TRANSFER	1	1	1	8
	2BC08620	RETAINER,TORQUE LIMITER	1	1	1	8
◉	2BC08650	MOUNT,REGISTRATION SEAL	1	1	1	8
	2BC10010	BASE,MAIN CHARGER	1	1	1	9
	2BC10020	TERMINAL BASE,MAIN CHARGER HIGH VO	1	1	1	39
	2BC10030	MOUNT,POTENTIAL SENSOR	1	1	1	40
	2BC10040	RAIL,CLEANING LAMP	1	1	1	9
	2BC10050	ADJUSTING PLATE,MAIN CHARGER	1	1	1	8
	2BC10060	UPPER SPONGE,POTENTIAL SENSOR	1	1	1	40
	2BC12100	COVER,ISU	1	1	1	10
	2BC12110	MOUNT,SCANNER SWITCH	1	1	1	10
◉	2BC12120	PULLEY,SCANNER	8	8	8	10
◉	2BC12130	STANDARD PLATE,SHADING	1	1	1	11
◉	2BC12150	LAMP,SCANNER	1	1	1	10
	2BC12160	UPPER FILM,SCANNER	1	1	1	11
◉	2BC13180	VIBRATION INSULATOR 2,COVER	1	1	1	12
	2BC14010	HOUSING,DEVELOPING	1	1	1	13
	2BC14020	MAGNET,DEVELOPING	1	1	1	13
	2BC14030	DOCTOR BLADE,DEVELOPING	1	1	1	13
	2BC14040	REINFORCEMENT,DOCTOR BLADE	1	1	1	13
	2BC14050	FRONT BUSHING,SLEEVE	1	1	1	13
	2BC14060	COVER,DEVELOPING	1	1	1	13
	2BC14070	MOUNT,DEVELOPING INPUT	1	1	1	13
◉	2BC14080	GEAR,DEVELOPING IDLE	1	1	1	13
◉	2BC14090	GEAR,TONER SUPPLY	1	1	1	13
	2BC14100	SHAFT,TONER SUPPLY	1	1	1	13
	2BC14110	COUPLING,SPIRAL	1	1	1	13
	2BC14120	LOWER COVER,DEVELOPING	1	1	1	13
	2BC14130	DUCT,DEVELOPING	1	1	1	22
◉	2BC14140	SPONGE,DUCT JOINT	1	1	1	22
◉	2BC14150	UPPER SEAL,DEVELOPING	1	1	1	13
	2BC14160	HOLDER,DEVELOPING	2	2	2	8
	2BC14170	HOLDER,SUB HOPPER	1	1	1	8
	2BC14180	TERMINAL,DEVELOPING BIAS	2	2	2	8

• Parts with "◉" indicates the Service parts.

SP	Part. No.	Description	Quantity			Fig. No.
			120V	230V	240V	
◉	2BC14200	SPONGE,DEVELOPING DUCT	2	2	2	22
◉	2BC14210	SPONGE A,DEVELOPING	2	2	2	13
◉	2BC14220	SPONGE B,COVER DEVELOPING	2	2	2	13
◉	2BC14230	BUSHING 8-19,DEVELOPING	1	1	1	13
◉	2BC14240	GEAR,DEVELOPING SLEEVE	1	1	1	13
◉	2BC14250	GEAR,DEVELOPING INPUT	1	1	1	13
	2BC14280	LOWER FILM,DEVELOPING	1	1	1	13
	2BC14290	SPONGE,DEVELOPING JOINT	1	1	1	13
	2BC15010	LOWER HOUSING,HOPPER	1	1	1	29
	2BC15020	RIGHT SUPPORT PLATE,HOPPER	1	1	1	29
	2BC15030	LEFT SUPPORT PLATE,HOPPER	1	1	1	29
	2BC15040	SPIRAL,TONER CONVEYING	1	1	1	29
	2BC15050	SPIRAL,TONER DRAW	1	1	1	29
	2BC15060	COVER,TONER DRAW	1	1	1	29
◉	2BC15070	GEAR,DRAW SPIRAL	1	1	1	29
◉	2BC15080	SEAL,TONER SUPPLY	1	1	1	29
◉	2BC15090	SPONGE A,TONER DRAW	1	1	1	29
◉	2BC15100	SPONGE B,TONER DRAW	1	1	1	29
◉	2BC15110	SPONGE C,TONER DRAW	1	1	1	29
◉	2BC15120	SPONGE D,TONER DRAW	1	1	1	29
	2BC15150	COVER,SUPPLY SPIRAL	1	1	1	29
	2BC15160	SEAL,DRAW COVER	1	1	1	29
	2BC15170	UPPER HOUSING,HOPPER	1	1	1	29
	2BC15180	LOWER MOUNT BASE,HOPPER	1	1	1	29
◉	2BC15190	UPPER MOUNT BASE,HOPPER(EUR)		1	1	29
	2BC15200	SPRING,EJECT ACTUATOR	1	1	1	29
◉	2BC15210	UPPER MOUNT BASE,HOPPER(USA)	1			29
	2BC15230	MOUNT,SUB HOPPER	1	1	1	30
	2BC15250	SHAFT,HOPPER AGITATION	1	1	1	29
	2BC15260	MOUNT,CLEANING SPRING	1	1	1	29
	2BC15270	HOLDER,CLEANING SPRING	1	1	1	29
◉	2BC15280	SHUTTER,HOPPER(USA)	1			29
◉	2BC15290	SHUTTER,HOPPER(EUR)		1	1	29
	2BC15300	SPONGE,SUB HOPPER	1	1	1	30
	2BC15310	COVER,REMAINDER DETECTION	1	1	1	29
	2BC16010	BASE,CONVEYING UNIT	1	1	1	17
	2BC16040	MOUNT,FIXING UNIT	1	1	1	16
	2BC16050	LEFT STAY,CONVEYING UNIT	1	1	1	16
	2BC16060	LOWER GUIDE,REGISTRATION	1	1	1	17
	2BC16070	BASE,CONVEYING RELEASE	1	1	1	16

SP	Part. No.	Description	Quantity			Fig. No.
			120V	230V	240V	
	2BC16080	FRONT FRAME,CONVEYING RELEASE	1	1	1	16
	2BC16090	REAR FRAME,CONVEYING RELEASE	1	1	1	16
	2BC16100	LOWER STAY,TRANSFER	1	1	1	17
◉	2BC16110	ROLLER,CONVEYING IDLE	1	1	1	17
◉	2BC16120	ROLLER,CONVEYING	1	1	1	17
◉	2BC16130	BELT,CONVEYING	2	2	2	17
◉	2BC16150	SLIDER,IMAGE FORMATION	2	2	2	2
	2BC16160	SHAFT,TRANSFER RELEASE	1	1	1	16
	2BC16170	SUPPORT PLATE,TRANSFER RELEASE	2	2	2	16
	2BC16180	HOOK,TRANSFER RELEASE	1	1	1	16
	2BC16190	FILM,REGISTRATION	1	1	1	17
	2BC16200	FRONT GUIDE,CONVEYING	1	1	1	17
	2BC16210	GUIDE,CONVEYING	1	1	1	17
	2BC16220	REAR GUIDE,CONVEYING	1	1	1	17
	2BC16230	DUCT,CONVEYING JUNCTION	1	1	1	17
	2BC16240	DUCT,CONVEYING INHALATION	1	1	1	17
	2BC16250	FRONT RETAINER,INHALATION DUCT	1	1	1	17
	2BC16260	REAR RETAINER,INHALATION DUCT	1	1	1	17
◉	2BC16270	SPACER,CONVEYING FAN	1	1	1	16
◉	2BC16290	LOWER MOUNT,REGISTRATION CLEANER	1	1	1	17
	2BC16300	DUCT,CONVEYING BLOWER	1	1	1	16
	2BC16310	MOUNT,CONVEYING SLIDER	2	2	2	2
	2BC16330	DUCT,CONVEYING	1	1	1	2
◉	2BC16350	FILTER,OZONE	1	1	1	1
	2BC16450	MOUNT,CONVEYING HOOK	1	1	1	2
	2BC16460	HOOK,CONVEYING RETAINING	1	1	1	2
	2BC16470	SPRING,CONVEYING HOOK	1	1	1	2
◉	2BC16480	BELT B,CONVEYING MIDDLE	1	1	1	17
	2BC16490	SPRING,CONVEYING RELEASE	1	1	1	16
	2BC17010	SHIELD,TRANSFER	1	1	1	20
	2BC17020	PARTITION,TRANSFER SHIELD	2	2	2	20
	2BC17030	FRONT HOUSING,TRANSFER	1	1	1	20
	2BC17040	REAR HOUSING,TRANSFER	1	1	1	20
	2BC17050	GUIDE,SEPARATION	1	1	1	20
	2BC17060	FRONT GUIDE,TRANSFER	1	1	1	20
	2BC17070	FRONT FILM,TRANSFER GUIDE	1	1	1	20
	2BC17080	FRONT MOUNT BASE,TRANSFER GUIDE	1	1	1	20
	2BC17090	FRONT LID,TRANSFER	1	1	1	20
	2BC17100	REAR LID,TRANSFER	1	1	1	20
	2BC17130	HOUSING,TRANSFER CONNECTOR	1	1	1	40

• Parts with "◉" indicates the Service parts.

SP	Part. No.	Description	Quantity			Fig. No.
			120V	230V	240V	
	2BC17140	LID,TRANSFER CONNECTOR	1	1	1	40
◉	2BC17160	SEAL,PRE TRANSFER CHARGE	1	1	1	8
◉	2BC17260	FRONT PLATE SPRING,TRANSFER	1	1	1	20
◉	2BC17270	REAR PLATE SPRING,TRANSFER	1	1	1	20
	2BC17310	FRONT SHEET,TRANSFER GUIDE	1	1	1	20
	2BC18010	HOUSING,CLEANING	1	1	1	14
	2BC18030	FRONT FRAME,CLEANING	1	1	1	14
	2BC18040	REAR FRAME,CLEANING	1	1	1	14
	2BC18060	COVER,CLEANING	1	1	1	14
◉	2BC18070	LOWER SEAL,CLEANING	1	1	1	14
	2BC18080	MOUNT BASE,SEPARATION CLAW	2	2	2	14
	2BC18090	SHAFT,CLEANING BLADE	1	1	1	14
	2BC18100	LEVER,BLADE RELEASE	1	1	1	14
	2BC18110	PRESSING PLATE,CLEANING BLADE	1	1	1	14
◉	2BC18120	SPRING,CLEANING	1	1	1	14
	2BC18170	SPIRAL,CLEANING	1	1	1	14
	2BC18180	REAR GROUND PLATE,CLEANING	1	1	1	14
◉	2BC18190	BRUSH,CLEANING	1	1	1	14
	2BC18220	SCRAPER,BRUSH	1	1	1	14
	2BC18230	SHUTTER,CLEANING	1	1	1	14
	2BC18240	REAR STAY,SPIRAL	1	1	1	14
	2BC18260	SPRING,THRUST	1	1	1	14
◉	2BC18320	FRONT SEAL,BLADE SIDE	1	1	1	14
◉	2BC18330	REAR SEAL,BLADE SIDE	1	1	1	14
◉	2BC18340	FRONT SPONGE,BLADE SIDE	1	1	1	14
◉	2BC18350	REAR SPONGE,BLADE SIDE	1	1	1	14
◉	2BC18390	FRONT SPONGE,CLEANING	1	1	1	14
◉	2BC18400	REAR SPONGE,CLEANING	1	1	1	14
◉	2BC18410	FILM,CLEANING	2	2	2	14
◉	2BC18430	SPONGE,SHUTTER	1	1	1	14
◉	2BC18440	SEAL,TONER BLOWER	1	1	1	14
	2BC18450	SCRAPER,SPIRAL	1	1	1	14
◉	2BC18460	BLADE,CLEANING	1	1	1	14
	2BC18470	LOWER SPONGE,FUR BRUSH	2	2	2	14
◉	2BC18490	LOWER SPONGE,SEAL	1	1	1	14
	2BC18510	HOUSING,DISPOSAL	1	1	1	39
	2BC18520	SPRING,DISPOSAL	1	1	1	39
	2BC18530	MOUNT,TONER DISPOSAL DRIVE	1	1	1	39
	2BC18540	SHAFT A,CLEANING DISPOSAL	1	1	1	39
	2BC18550	PARTITION,DISPOSAL TANK	1	1	1	15
	2BC18560	SUPPORT PLATE,DISPOSAL TANK	1	1	1	15
	2BC18570	UPPER PARTITION,DISPOSAL TANK	1	1	1	15
	2BC18580	UPPER MOUNT,DISPOSAL HOUSING	1	1	1	39
	2BC18590	MOUNT,SUPPORT PLATE DISPOSAL TANK	1	1	1	15
	2BC18600	LOWER MOUNT,DISPOSAL HOUSING	1	1	1	22
	2BC18610	SPRING,DISPOSAL TANK	1	1	1	15
	2BC18630	REINFORCEMENT,PARTITION DISPOSAL T	1	1	1	15
	2BC18640	ADJUSTING PLATE,SPRING DISPOSAL TA	1	1	1	15
◉	2BC18650	GEAR 14B,FUR BRUSH	2	2	2	14
◉	2BC18660	GEAR 23B,CLEANING SPIRAL	1	1	1	14
◉	2BC18670	GEAR B,CLEANING DRIVE	1	1	1	14
◉	2BC18680	GEAR 45B,THRUST	1	1	1	14
	2BC18700	SPONGE,BRUSH BUSHING	1	1	1	14
◉	2BC18720	UPPER FRONT FILM,BLADE	1	1	1	14
◉	2BC18740	UPPER REAR FILM,BLADE	1	1	1	14
	2BC18750	SCRAPER B,FUR BRUSH	1	1	1	14
	2BC18770	LOWER SPONGE,LOWER SEAL	2	2	2	14
	2BC20010	UPPER FRONT FRAME,FIXING	1	1	1	19
	2BC20020	UPPER REAR FRAME,FIXING	1	1	1	19
	2BC20030	LOWER FRONT FRAME,FIXING	1	1	1	19
	2BC20040	LOWER REAR FRAME,FIXING	1	1	1	19
	2BC20050	BASE,FIXING	1	1	1	19
	2BC20060	STAY,FIXING	1	1	1	19
	2BC20070	LOWER GUIDE,FIXING EJECT	1	1	1	19
	2BC20080	FRONT LEVER,PRESSURE	1	1	1	19
	2BC20090	REAR LEVER,PRESSURE	1	1	1	19
	2BC20100	UPPER SUPPORT PLATE,FIXING EJECT	1	1	1	26
◉	2BC20110	UPPER COVER,FIXING EJECT	1	1	1	26
	2BC20120	UPPER HOLDER,FIXING EJECT	2	2	2	26
	2BC20130	FRONT GUIDE,FIXING SEPARATION CLAW	1	1	1	19
	2BC20140	REAR GUIDE,FIXING SEPARATION CLAW	1	1	1	19
	2BC20150	UPPER GUIDE,FIXING EJECT	1	1	1	26
	2BC20160	MOUNT,FIXING DRAWER	1	1	1	19
	2BC20170	UPPER GUIDE,FEED SHIFT	1	1	1	26
	2BC20180	HOLDER,FIXING EJECT	1	1	1	26
	2BC20190	SHAFT,SEPARATION CLAW	1	1	1	26
◉	2BC20200	GEAR,SEPARATION CLAW THRUST	1	1	1	19
	2BC20210	PIN,SEPARATION CLAW THRUST	1	1	1	19
	2BC20220	LEVER,SEPARATION CLAW THRUST	1	1	1	19
	2BC20230	MOUNT,THRUST GEAR	1	1	1	19

• Parts with "◉" indicates the Service parts.

SP	Part. No.	Description	Quantity			Fig. No.
			120V	230V	240V	
	2BC20240	SHAFT,FIXING EJECT PULLEY	1	1	1	26
	2BC20250	STOPPER,FIXING EJECT GUIDE	1	1	1	16
◉	2BC20260	PRESS ROLLER	1	1	1	19
◉	2BC20290	HEATER M,FIXING(120)	1			19
◉	2BC20300	HEATER S,FIXING(120)	1			19
◉	2BC20310	HEATER M,FIXING(220 - 240)		1	1	19
◉	2BC20320	HEATER S,FIXING(220 - 240)		1	1	19
	2BC20330	FRONT SUPPORT PLATE,HEATER	1	1	1	19
	2BC20340	REAR SUPPORT PLATE,HEATER	1	1	1	19
◉	2BC20350	UPPER COVER,FIXING	1	1	1	19
◉	2BC20360	GEAR,FIXING JOINT	1	1	1	19
◉	2BC20370	FRONT COVER,FIXING	1	1	1	19
	2BC20380	STOPPER,SEPARATION CLAW	1	1	1	26
	2BC20390	SHAFT,FIXING EJECT RELEASE	1	1	1	26
◉	2BC20400	HANDLE,FIXING EJECT RELEASE	1	1	1	26
	2BC20410	SPRING,FIXING EJECT RELEASE	1	1	1	26
	2BC20420	UPPER FULCRUM PIN,FEED SHIFT	1	1	1	26
◉	2BC20430	THERMISTOR,FIXING	1	1	1	19
◉	2BC20440	FRONT TERMINAL,HEATER	1	1	1	19
	2BC20450	FRONT HOLDER,HEATER	1	1	1	19
	2BC20460	REAR RETAINER,HEATER	1	1	1	19
	2BC20470	SPRING,FIXING EJECT DAMPER	1	1	1	16
	2BC20480	SPRING,SEPARATION CLAW THRUST	1	1	1	26
	2BC20490	SPRING,FIXING EJECT COVER	2	2	2	26
	2BC20500	LOWER DUCT,FIXING EJECT	1	1	1	16
	2BC20510	SPRING,FIXING GUIDE	1	1	1	19
	2BC20520	PIN,FIXING DRAWER	2	2	2	19
◉	2BC20530	ROLLER,HEAT	1	1	1	19
	2BC20560	LOWER FRONT GUIDE,FIXING	1	1	1	19
	2BC20570	UPPER FRONT GUIDE,FIXING	1	1	1	19
	2BC20580	LEFT STAY,FIXING	1	1	1	19
	2BC20590	LEFT COVER,FIXING	1	1	1	19
◉	2BC20600	ROLLER,PRESSING CLEANING	1	1	1	19
	2BC20610	SUPPORT PLATE,FIXING CLEANING	1	1	1	19
	2BC20620	PIN A,FIXING CLEANING RETAINING	2	2	2	19
	2BC20630	PIN B,FIXING CLEANING RETAINING	1	1	1	19
	2BC20650	SPRING,FIXING CLEANING DRIVE	2	2	2	19
◉	2BC20660	GEAR,FIXING CLEANING DRIVE	1	1	1	19
	2BC20670	RETAINER,FIXING CLEANING GEAR	1	1	1	19
	2BC20680	SHAFT A,FIXING CLEANING DRIVE	1	1	1	19

SP	Part. No.	Description	Quantity			Fig. No.
			120V	230V	240V	
	2BC20690	SHAFT B,FIXING CLEANING DRIVE	1	1	1	19
	2BC20700	SHAFT C,FIXING CLEANING DRIVE	1	1	1	21
	2BC20710	SUPPORT PLATE,FIXING CLEANING DRIV	1	1	1	21
	2BC20720	RETAINER,FIXING CLEANING DRIVE	1	1	1	21
◉	2BC20730	GEAR B,FIXING CLEANING DRIVE	1	1	1	19
	2BC20740	SHEET,FIXING EJECT COVER	1	1	1	26
	2BC20750	UPPER FRONT SHAFT,FIXING GUIDE	4	4	4	19
◉	2BC20760	UPPER PULLEY,FIXING EJECT	4	4	4	26
	2BC21010	FRONT FRAME,EJECT	1	1	1	26
	2BC21020	REAR FRAME,EJECT	1	1	1	26
◉	2BC21030	ROLLER,EJECT	1	1	1	26
	2BC21040	LEFT SHAFT,TURN OVER	1	1	1	26
	2BC21050	UPPER GUIDE,EJECT	1	1	1	26
	2BC21060	LEFT GUIDE,SWITCH BACK	1	1	1	26
	2BC21070	LOWER GUIDE,EJECT	1	1	1	26
◉	2BC21080	LOWER FILM,EJECT	1	1	1	26
	2BC21090	WORK PLATE,SWITCH BACK ROLLER RELE	1	1	1	26
	2BC21100	LIFT PLATE,TURN OVER ROLLER RELEAS	2	2	2	26
	2BC21120	MOUNT,RELEASE PULLEY	1	1	1	26
	2BC21140	LEVER,SWITCH BACK ROLLER RELEASE	1	1	1	26
◉	2BC21200	BELT,EJECT DRIVE	1	1	1	22
	2BC21210	FRONT FRAME,FEED SHIFT	1	1	1	18
	2BC21220	REAR FRAME,FEED SHIFT	1	1	1	18
◉	2BC21240	LEFT ROLLER,FEED SHIFT	1	1	1	18
◉	2BC21250	LOWER RIGHT ROLLER,FEED SHIFT	1	1	1	18
◉	2BC21260	RIGHT ROLLER,TURN OVER FEED	1	1	1	18
	2BC21270	GUIDE,FEED SHIFT	1	1	1	18
	2BC21290	LOWER GUIDE,FEED SHIFT	1	1	1	18
	2BC21310	LOWER RIGHT GUIDE,FEED SHIFT	1	1	1	18
	2BC21320	LEFT GUIDE,FEED SHIFT MIDDLE	1	1	1	18
	2BC21330	LOWER LEFT GUIDE,FEED SHIFT	1	1	1	18
	2BC21340	RIGHT GUIDE,TURN OVER	1	1	1	18
◉	2BC21350	BELT,FEED SHIFT	1	1	1	18
◉	2BC21370	UPPER LEFT ROLLER,FEED SHIFT	1	1	1	18
	2BC21390	TENSION PLATE,FEED SHIFT	1	1	1	18
◉	2BC21420	PULLEY 20,SWITCH BACK	1	1	1	18
	2BC21430	FULCRUM PIN,FEED SHIFT	1	1	1	18
◉	2BC21440	GEAR,FIXING EJECT DRIVE	1	1	1	18
	2BC21450	MOUNT,FEED SHIFT SOLENOID	1	1	1	18
	2BC21460	TENSION PLATE,EJECT DRIVE	1	1	1	22

• Parts with "◉" indicates the Service parts.

SP	Part. No.	Description	Quantity			Fig. No.
			120V	230V	240V	
◉	2BC21470	ROLLER B,FIXING EJECT	1	1	1	18
	2BC21500	HOOK,DUPLEX RETAINING	1	1	1	2
	2BC21510	MOUNT,DUPLEX HOOK	1	1	1	2
	2BC21520	LEFT MOUNT,DUPLEX SLIDER	1	1	1	2
	2BC21530	RIGHT MOUNT,DUPLEX SLIDER	1	1	1	2
	2BC22010	MOUNT,IMAGE FORMATION DRIVE	1	1	1	22
	2BC22020	RETAINER,IMAGE FORMATION DRIVE	1	1	1	22
◉	2BC22030	PULLEY 23/84,DRUM DRIVE	1	1	1	22
◉	2BC22040	BELT,DRUM DRIVE	1	1	1	22
◉	2BC22050	PULLEY 51,DRUM	1	1	1	22
	2BC22060	SHAFT,DRUM DRIVE	1	1	1	22
	2BC22070	SPRING,DRUM DRIVE	1	1	1	22
◉	2BC22080	BELT,CLEANING DRIVE	1	1	1	22
	2BC22090	SHAFT,DEVELOPING DRIVE	1	1	1	22
	2BC22100	SHAFT,REGISTRATION DRIVE	1	1	1	22
	2BC22110	SHAFT,CLEANING DRIVE	1	1	1	22
	2BC22120	MOUNT BASE,CLEANING DRIVE	1	1	1	22
◉	2BC22130	PULLEY 20,DEVELOPING AGITATION	1	1	1	22
◉	2BC22140	COUPLING,DEVELOPING AGITATION	1	1	1	22
◉	2BC22150	GEAR 24,REGISTRATION	3	3	3	21,22
◉	2BC22160	BELT,DEVELOPING AGITATION	1	1	1	22
	2BC22170	SPRING,DEVELOPING AGITATION	1	1	1	22
	2BC22210	MOUNT A,FEED SHIFT DRIVE	1	1	1	21
	2BC22220	RETAINER A,FEED SHIFT DRIVE	1	1	1	21
◉	2BC22230	GEAR 49/65,FEED	2	2	2	21
◉	2BC22240	GEAR 42,FEED	1	1	1	21
◉	2BC22250	GEAR 27,FEED	1	1	1	21
	2BC22260	SHAFT,DEVELOPING AGITATION DRIVE	1	1	1	21
	2BC22270	SHAFT A,FEED CLUTCH	2	2	2	21
	2BC22280	SHAFT,FEED DRIVE	1	1	1	21
◉	2BC22290	GEAR 68,PAPER FEED	1	1	1	21
◉	2BC22300	PULLEY 29/52,PAPER FEED DRIVE	1	1	1	21
◉	2BC22310	BELT,PAPER FEED DRIVE	1	1	1	21
	2BC22320	RETAINER,PAPER FEED DRIVE	1	1	1	21
	2BC22340	RETAINER,DECK DRIVE	1	1	1	21
	2BC22360	RETAINER,DECK PAPER FEED DRIVE	1	1	1	21
◉	2BC22370	BELT,DECK PAPER FEED DRIVE	1	1	1	21
◉	2BC22380	PULLEY 26,PAPER FEED	2	2	2	21
	2BC22390	TENSION PLATE,DECK PAPER FEED DRIV	2	2	2	21
	2BC22400	SUPPORT PLATE,DECK PAPER FEED DRIV	1	1	1	2
	2BC22410	MOUNT B,FEED SHIFT DRIVE	1	1	1	21
	2BC22420	RETAINER B,FEED SHIFT DRIVE	1	1	1	21
	2BC22430	SHAFT B,FEED CLUTCH	2	2	2	21
	2BC22510	RETAINER,FIXING DRIVE	1	1	1	22
◉	2BC22520	GEAR 29/42,DUPLEX	1	1	1	22
◉	2BC22530	BELT,FIXING DRIVE	1	1	1	22
◉	2BC22540	PULLEY 34,FIXING	1	1	1	22
◉	2BC22550	GEAR 35,FIXING	1	1	1	22
	2BC22560	SHAFT,FIXING DRIVE	1	1	1	22
	2BC22570	MOUNT,FIXING DRIVE	1	1	1	22
◉	2BC22580	GEAR 63/32,FIXING	1	1	1	22
◉	2BC22590	GEAR 45/30,DUPLEX	1	1	1	22
	2BC22600	FLYWHEEL A	1	1	1	22
	2BC22610	FLYWHEEL B	2	2	2	22
	2BC23010	DUCT,COOLING	1	1	1	40
◉	2BC23020	FILTER,MAIN	1	1	1	1
◉	2BC25020	SHEET FUNCTION (EXP)	1	1	1	41
	2BC26010	MOUNT,SEQUENCE	1	1	1	40
	2BC26020	UPPER LID,SEQUENCE	1	1	1	1
	2BC26030	LOWER LID,SEQUENCE	1	1	1	1
	2BC26040	MOUNT,INTERFACE	1	1	1	40
	2BC26050	SUPPORT PLATE,SEQUENCE	1	1	1	40
	2BC26060	RETAINER,SEQUENCE	1	1	1	40
	2BC26070	LID,CONTROLLER	1	1	1	40
	2BC26080	MOUNT,POWER SOURCE	1	1	1	39
	2BC26090	MOUNT,HIGH VOLTAGE PCB	1	1	1	40
	2BC26100	MOUNT,DF CONNECTOR	1	1	1	11
	2BC26110	MOUNT,DECK CONNECTOR	1	1	1	39
	2BC26120	MOUNT,CASSETTE DRAWER	2	2	2	39
	2BC26130	UPPER RETAINER,SEQUENCE	1	1	1	11
	2BC26140	RIGHT MOUNT,OPERATION UNIT	1	1	1	41
	2BC26150	INNER MOUNT,OPERATION UNIT	1	1	1	41
	2BC26160	LEFT MOUNT,OPERATION UNIT	1	1	1	41
	2BC26190	MOUNT,PAPER SIZE DETECTION	2	2	2	39
	2BC26200	MOUNT A,DECK REMAINING DETECTION	1	1	1	39
	2BC26210	MOUNT B,DECK REMAINING DETECTION	1	1	1	39
	2BC26220	MOUNT,POWER SOURCE SUPPLY(100)	1			39
	2BC26240	MOUNT,POWER SOURCE SUPPLY(230)		1	1	39
	2BC26250	MOUNT,DECK DETECTION	2	2	2	39
	2BC26260	LOWER RIGHT SHIELD PLATE	1	1	1	2

• Parts with "◉" indicates the Service parts.

SP	Part. No.	Description	Quantity			Fig. No.
			120V	230V	240V	
	2BC26270	MOUNT,HDD	1	1	1	40
	2BC26280	GROUND PLATE,HDD	1	1	1	40
	2BC26300	REAR GROUND PLATE,COVER	3	3	3	1
◉	2BC27010	SWITCH,CONVEYING	6	6	6	7,17,27
	2BC27050	RETAINING PIN B,DRAWER	4	4	4	39
◉	2BC27080	SWITCH,PAPER REMAINING DETECTION	6	6	6	39
◉	2BC27090	LAMP PCL	2	2	2	8
◉	2BC27100	IC DIMM	1	1	1	40
◉	2BC27120	MOTOR B,LIFT CASSETTE	2	2	2	39
	2BC27300	WIRE,MAIN	1	1	1	39
	2BC27310	WIRE,PRIMARY	1	1	1	39
	2BC27320	JUNCTION WIRING 1,CCD	1	1	1	11
	2BC27330	JUNCTION WIRING,INTERLOCK	1	1	1	2
	2BC27340	WIRE,MAIN PCB	1	1	1	40
	2BC27360	JUNCTION WIRING,REGISTRATION	1	1	1	17
	2BC27370	WIRE,CONVEYING UNIT	1	1	1	16
	2BC27380	WIRE,FIXING UNIT	1	1	1	19
	2BC27390	WIRE,DECK CONVEYING UNIT	1	1	1	6
	2BC27400	WIRE,PAPER FEED UNIT	3	3	3	7
	2BC27410	WIRE A,PAPER FEED SWITCH	1	1	1	27
	2BC27420	WIRE B,PAPER FEED SWITCH	4	4	4	7
	2BC27440	WIRE,DEVELOPING BIAS	1	1	1	40
	2BC27450	WIRE,BYPASS PAPER FEED	1	1	1	27
	2BC27460	WIRE,EJECT	1	1	1	26
	2BC27470	WIRE,HIGH VOLTAGE	1	1	1	39
	2BC27480	WIRE,GRID	1	1	1	39
	2BC27490	WIRE,DEVELOPING UNIT	1	1	1	13
	2BC27500	JUNCTION WIRING,DEVELOPING BIAS	1	1	1	8
	2BC27510	WIRE,HDD	1	1	1	40
	2BC27520	REAR WIRE,CASSETTE SWITCH	1	1	1	39
	2BC27530	WIRE,HOPPER	1	1	1	29
	2BC27540	JUNCTION WIRING,FEED SHIFT	1	1	1	18
	2BC27550	WIRE A,DECK REMAINDER DETECTION	2	2	2	39
	2BC27580	JUNCTION WIRING,DEHUMIDIFIER HEATE	1	1	1	39
	2BC27590	WIRE B,SCANNER DRIVE	1	1	1	10
	2BC27620	JUNCTION WIRING,THERMOSTAT	1	1	1	19
◉	2BC27630	CLUTCH 34,FEED	1	1	1	21
	2BC27640	WIRE GND,FINISHER	2	2	2	39
	2BC27650	WIRE,ORIGINAL SIZE DETECTION(INCH)	1			10
	2BC27740	WIRE,ENGINE PCB	1	1	1	40

SP	Part. No.	Description	Quantity			Fig. No.
			120V	230V	240V	
◉	2BC27750	SWITCH,MAIN	1	1	1	40
	2BC27760	JUNCTION WIRING,BYPASS	1	1	1	27
	2BC27770	WIRE,DECK DETECTION	2	2	2	39
◉	2BC27780	FAN,FIXING	3	3	3	16,40
◉	2BC27790	FAN,COOLING	2	2	2	40
◉	2BC27800	INTERLOCK SWITCH A	2	2	2	2,40
	2BC27860	SHIELD B,GASKET PRINTER		2	2	40
	2BC27870	JUNCTION WIRING,TONER CONTROL SENS	1	1	1	30
	2BC27880	WIRE,CLEANING GROUND	1	1	1	14
	2BC27920	FRONT RESISTOR,TRANSFER GUIDE	1	1	1	20
	2BC27930	SWITCH,FEED	1	1	1	27
◉	2BC28050	MAIN HIGH VOLTAGE PCB	1	1	1	40
◉	2BC28120	INVERTER PCB	1	1	1	10
	2BC60010	DISPOSAL TANK ASS'Y	1	1	1	15
◉	2BC60020	JUNCTION PCB ASS'Y	2	2	2	42
◉	2BC68150	IC ROM MAIN	1	1	1	42
◉	2BC68160	IC ROM MMI	1	1	1	42
◉	2BC82020	SET,DRUM	1	1	1	8
◉	2BC93010	PARTS,ASS'Y PRIMARY PAPER FEED,SP	3	3	3	7
◉	2BC93020	PARTS,ASS'Y TRANSFER CHARGER,SP	1	1	1	20
◉	2BC93030	PARTS,ASS'Y MAIN CHARGER,SP	1	1	1	9
◉	2BC93040	PARTS,ASS'Y DEVELOPING,SP	1	1	1	13
◉	2BC93050	PARTS,CLEANING ASS'Y,SP	1	1	1	14
◉	2BC93070	PARTS 120,ASS'Y FIXING,SP	1			19
◉	2BC93080	PARTS 230,ASS'Y FIXING,SP		1	1	19
◉	2BC93090	PARTS,ASS'Y FIXING EJECT GUIDE,SP	1	1	1	26
◉	2BC93100	PARTS,ROLLER,FEED SHIFT(SP)	1	1	1	18
◉	2BC93110	PARTS,ASS'Y HOPPER,USA SP	1			29
◉	2BC93120	PARTS,ASS'Y HOPPER,EUR SP		1	1	29
◉	2BC93130	PARTS,ASS'Y SEPARATION CLAW(SP)	2	2	2	14
◉	2BC93140	PARTS,ASS'Y ISU,SP	1	1	1	10
◉	2BC93150	PARTS,ASS'Y LSU(SP)	1	1	1	12
◉	2BC93220	PARTS,TRANSFER CLEANING	1	1	1	20
◉	2BD04010	FRONT COVER	1	1	1	1
	2BD27010	WIRE,MAIN	1	1	1	39
◉	2BD60010	UPPER GUIDE,CONFLUENCE	1	1	1	42
◉	2BD60020	LOWER GUIDE,CONFLUENCE	1	1	1	42
◉	2BJ01031	OPERATION ASS'Y A	1	1	1	41
◉	2BJ01071	OPERATION ASS'Y B	1	1	1	41
	2BJ04210	SHIELD LCD	1	1	1	41

• Parts with "◉" indicates the Service parts.

SP	Part. No.	Description	Quantity			Fig. No.
			120V	230V	240V	
	2BJ04220	GROUND PLATE LCD A	2	2	2	41
	2BJ04230	GROUND PLATE LCD B	1	1	1	41
	2BJ04240	GROUND PLATE LCD C	1	1	1	41
◉	2BJ25020	KEY OPERATION 10	1	1	1	41
◉	2BJ25040	KEY STOP	1	1	1	41
◉	2BJ25050	KEY RESET	1	1	1	41
◉	2BJ25060	KEY SAVER	1	1	1	41
◉	2BJ25070	KEY INTERRUPT	1	1	1	41
◉	2BJ25080	KEY CONTROL	1	1	1	41
◉	2BJ25090	KEY INIT	1	1	1	41
◉	2BJ25100	UPPER KEY FUNCTION	5	5	5	41
◉	2BJ25150	LEFT LID OPE UNIT	2	2	2	41
◉	2BJ25160	LEFT LID COPIER	1	1	1	41
◉	2BJ25170	LEFT LID PRINTER	1	1	1	41
◉	2BJ25180	LEFT LID SCANNER	1	1	1	41
◉	2BJ25200	RIGHT LID OPE UNIT	1	1	1	41
◉	2BJ25210	LEFT DUST SHIELD	1	1	1	41
◉	2BJ25220	CENTER DUST SHIELD	1	1	1	41
◉	2BJ25230	RIGHT DUST SHIELD	1	1	1	41
◉	2BJ25240	BARRIER TABLET	1	1	1	41
◉	2BJ25250	VOLUME OPE UNIT	1	1	1	41
◉	2BJ25270	SPONGE LCD A	2	2	2	41
◉	2BJ25280	SPONGE LCD B	2	2	2	41
◉	2BJ25290	COVER OPE UNIT E	1	1	1	41
◉	2BJ25300	KEY PRINT E	1	1	1	41
◉	2BJ25310	LEFT KEY COPIER E	1	1	1	41
◉	2BJ25320	LEFT KEY PRINTER E	1	1	1	41
◉	2BJ25330	LEFT KEY SCANNER E	1	1	1	41
◉	2BJ25370	SHEET TABLET	1	1	1	41
	2BJ25380	SHEET OPERATION PCB	1	1	1	41
	2BJ25390	RETAINER LCD	2	2	2	41
	2BJ25400	SHEET LCD A	1	1	1	41
	2BJ25410	SHEET LCD B	1	1	1	41
	2BJ25420	SHEET LCD C	1	1	1	41
◉	2BJ27060	TABLET OPERATION	1	1	1	41
	2BJ27140	WIRE LCD	1	1	1	41
◉	2BJ28030	LCD PCB	1	1	1	41
◉	2BL04160	HANDLE CASSETTE	2	2	2	3
◉	2BL04310	PLATE NUMBER	1	1	1	3
◉	2BL04370	PLATE NUMBER 2	1	1	1	3

SP	Part. No.	Description	Quantity			Fig. No.
			120V	230V	240V	
◉	2BL07940	CLEANER REGISTRATION	1	1	1	8
	2BL20200	STOPPER HEAT ROLLER	2	2	2	19
◉	2BL27410	SWITCH CONVEYING	5	5	5	6,18
◉	2BL27420	SWITCH REGISTRATION	1	1	1	26
◉	2BL27450	SWITCH PI	11	11	11	6,7,10,27 39
◉	2BL27550	MOTOR SUB	2	2	2	21
◉	2BL27700	FAN COOLING(60-25)	1	1	1	1
	20305130	LABEL L,HIGH TEMPERATURE CAUTION(E	3	3	3	2
	23227350	SHIELD B,GASKET	2	2	2	32
◉	28107400	BEARING,688ZZNR	25	25	25	10,21,22 24,25
	28801300	BUSING, PAPER FEED	1	1	1	23
	29717150	PRESSING SPRING,FEED BACK	4	4	4	24,27
	29717220	PRESSING SPRING B,SB	6	6	6	19,25,26
◉	29717230	BUSHING 6,FEED BACK	3	3	3	13,14
◉	29806490	GEAR 16T	1	1	1	27
◉	29806560	BUSHING 6	5	5	5	34,35,36
◉	29806810	BUSHING,6 REGISTRATION	2	2	2	17
◉	29807100	GEAR 16,BYPASS	1	1	1	27
◉	29812291	CUSHION,CONTACT GLASS	9	9	9	11
◉	29814340	GEAR 18,DEVELOPER UNIT	2	2	2	27
	29820110	FRONT PIN,FULCRUM	5	5	5	14,32
	29820420	PIN,BEARING	6	6	6	19,26
◉	29822140	BUSHING,DRUM SHAFT	1	1	1	14
◉	29822230	GEAR 16T,PF IDLE	2	2	2	6,27
	29912420	HOLDER,WIRE ROPE	2	2	2	10
	29927231	POWER CODE AS(240)			1	39
◉	3AK16030	PULLEY,CONVEYING	2	2	2	25
	3AK16240	TORQUE LIMITER,MIDDLE DRIVE	1	1	1	8
◉	3AK20130	GEAR,WORM MAIN TRAY	1	1	1	18
◉	3AK20220	BELT,TRAY DRIVE	1	1	1	21
	3AL02050	MOUNT,RELEASE SWITCH	1	1	1	32
	3AL02070	STOPPER,ORIGINAL DETECTION SWITCH	1	1	1	32
	3AL02080	HOLDER,SPRING	1	1	1	32
	3AL02100	GUIDE,INTERFACE WIRE	1	1	1	32
	3AL02110	DIAL,JAM REMOVEMENT	1	1	1	36
	3AL02121	MOUNT,JAM REMOVEMENT DIAL	1	1	1	36
◉	3AL02150	GEAR 24,JAM REMOVEMENT	1	1	1	36
◉	3AL02160	GEAR 14,JAM REMOVEMENT	1	1	1	36

• Parts with "◉" indicates the Service parts.

SP	Part. No.	Description	Quantity			Fig. No.
			120V	230V	240V	
◉	3AL02170	GEAR 14,JOINT	1	1	1	36
	3AL02190	GUIDE B,WIRE PAPER FEED MOTOR	1	1	1	37
	3AL02200	SPACER,SRDF	1	1	1	32
◉	3AL03013	LEFT HINGE	1	1	1	32
◉	3AL03023	RIGHT HINGE	1	1	1	32
	3AL03032	LEFT STAY,HINGE	1	1	1	32
	3AL03045	RIGHT STAY,HINGE	1	1	1	32
	3AL03050	PIN,HINGE ADJUSTMENT(M)	1	1	1	32
	3AL04060	MAT,ORIGINAL HOLDER	1	1	1	31
	3AL04080	FILM,ORIGINAL HOLDER	2	2	2	31
◉	3AL04110	RIGHT COVER(K M)	1	1	1	31
◉	3AL05040	LABEL,ORIGINAL SIZE(METRIC)	1	1	1	33
	3AL05060	LABEL,ORIGINAL CURSOR(METRIC)	1	1	1	33
◉	3AL05080	LABEL,ORIGINAL SET	1	1	1	31
◉	3AL05090	LABEL,JAM REMOVEMENT	1	1	1	31
◉	3AL05111	LABEL,OPERATION	1	1	1	31
◉	3AL05120	LABEL,DF ORIGINAL CAUTION	1	1	1	31
	3AL06041	RACK,TABLE	2	2	2	33
	3AL06060	MOUNT,SIZE DETECTION	1	1	1	33
	3AL06072	FRONT SUPPORT PLATE,TABLE	1	1	1	33
	3AL06090	CUSHION,ORIGINAL GUIDE	1	1	1	33
	3AL06102	FULCRUM PIN,TABLE	2	2	2	33
	3AL06130	FRONT GUIDE,ORIGINAL(K M)	1	1	1	33
	3AL06140	REAR GUIDE,ORIGINAL(K M)	1	1	1	33
	3AL07230	PIN,PAPER FEED	2	2	2	36
	3AL07290	SHAFT,HOOK	1	1	1	31
	3AL08013	LEFT GUIDE,REGISTRATION	1	1	1	36
	3AL08033	GUIDE,CONVEYING	1	1	1	36
	3AL08072	GUIDE,READING	1	1	1	36
◉	3AL08100	INNER PULLEY,CONVEYING	2	2	2	36
◉	3AL08112	LOWER ROLLER,CONVEYING	1	1	1	36
◉	3AL08130	ROLLER,EJECT	1	1	1	36
◉	3AL08140	UPPER PULLEY,CONVEYING	2	2	2	31
◉	3AL08161	UPPER ROLLER,CONVEYING	1	1	1	36
◉	3AL08170	PULLEY,EJECT	4	4	4	35
	3AL08180	UPPER SHAFT,CONVEYING PULLEY	1	1	1	31
	3AL08190	LOWER SHAFT,CONVEYING PULLEY	1	1	1	36
	3AL08201	INNER SHAFT,CONVEYING PULLEY	1	1	1	36
	3AL08220	UPPER PLATE SPRING,CONVEYING PULLE	2	2	2	31
	3AL08240	LOWER PLATE SPRING,CONVEYING PULLE	2	2	2	36
	3AL08250	INNER PLATE SPRING,CONVEYING PULLE	2	2	2	36
	3AL08260	PLATE SPRING,EJECT GUIDE	2	2	2	35
	3AL08270	PLATE SPRING,REGISTRATION GUIDE	2	2	2	31
	3AL08280	MOUNT,CONVEYING PULLEY	1	1	1	36
	3AL08302	COVER,CONVEYING PULLEY	1	1	1	36
	3AL08310	MOUNT,EJECT SOLENOID	1	1	1	36
	3AL08341	LEVER,EJECT SOLENOID	1	1	1	36
	3AL08360	STOPPER,LEFT COVER FRONT	1	1	1	31
	3AL08370	STOPPER,LEFT COVER REAR	1	1	1	31
	3AL08401	SHEET,ORIGINAL HOLDER	1	1	1	36
	3AL08410	SHEET,GUIDE EJECT	1	1	1	35
	3AL08421	OUTER SHEET,GUIDE CONVEYING	2	2	2	36
	3AL08430	INNER SHEET,GUIDE CONVEYING	1	1	1	36
	3AL08451	SHEET,GUIDE PLATE EJECT	1	1	1	36
◉	3AL08480	FRONT PULLEY,READING	2	2	2	36
	3AL08490	SPRING,EJECT FEED SHIFT	1	1	1	35
◉	3AL08500	PULLEY,REGISTRATION	2	2	2	31
	3AL08530	INNER SHEET,GUIDE CONVEYING LARGE	1	1	1	36
	3AL08560	SPRING,EJECT PULLEY	4	4	4	35
	3AL08590	UPPER SHEET B,CONVEYING PULLEY	2	2	2	35
	3AL10011	GUIDE,LOOP	1	1	1	35
◉	3AL10020	ROLLER,LOOP	1	1	1	35
	3AL10032	GUIDE,LOOP FEED SHIFT	1	1	1	35
	3AL10040	SHAFT,FULCRUM PULLEY	1	1	1	35
	3AL10060	SHAFT,LOOP PULLEY	1	1	1	35
	3AL10073	LIGHT SHIELD,LOOP	1	1	1	36
	3AL10081	LEVER,LOOP FEED SHIFT	1	1	1	35
	3AL10091	LEVER,LOOP PULLEY SOLENOID	1	1	1	35
	3AL10100	LEVER,LOOP PULLEY	1	1	1	35
	3AL10110	LEVER,LOOP FEED SHIFT SOLENOID	1	1	1	35
	3AL10120	FRONT HOLDER,LOOP PULLEY	1	1	1	35
	3AL10131	MOUNT,LIGHT SHIELD	1	1	1	36
	3AL10143	MOUNT,LOOP PULLEY SOLENOID	1	1	1	35
	3AL10166	LEFT GUIDE,LOOP	1	1	1	35
	3AL10170	SHEET,GUIDE LOOP	1	1	1	35
	3AL10181	LEFT SHEET,GUIDE LOOP	1	1	1	35
	3AL10190	SPRING,LIGHT SHIELD	1	1	1	36
	3AL10200	REAR HOLDER,LOOP PULLEY	1	1	1	35
	3AL10210	SHEET,LOOP PULLEY	2	2	2	35
	3AL10230	SPRING,LOOP PULLEY SOLENOID	1	1	1	35

• Parts with "◉" indicates the Service parts.

SP	Part. No.	Description	Quantity			Fig. No.
			120V	230V	240V	
	3AL10281	LOWER LEFT SHEET B,GUIDE LOOP	1	1	1	35
	3AL10290	LEFT PIN,GUIDE LOOP	1	1	1	35
◉	3AL22010	PULLEY T35/T22/Z22	1	1	1	37
◉	3AL22020	PULLEY T28/Z18	1	1	1	37
◉	3AL22030	GEAR Z22/T35P2M	1	1	1	37
◉	3AL22040	GEAR Z18/T25P2M	1	1	1	36
◉	3AL27011	MOTOR,PAPER FEED	2	2	2	37
	3AL27030	WIRE,TABLE	1	1	1	33
◉	3AL27070	SOLENOID,LEADING FEED	1	1	1	34
◉	3AL27080	SOLENOID,FEED SHIFT	2	2	2	35,36
◉	3AL27111	SOLENOID,LOOP PULLEY	1	1	1	35
◉	3AL28020	SET LED PCB	1	1	1	34
◉	3AL93010	PARTS,CLUTCH PAPER FEED,SP	1	1	1	34
◉	3AL93020	PARTS,DRIVER PCB,SP	1	1	1	38
	3BC02010	FRONT FRAME	1	1	1	32
	3BC02020	REAR FRAME	1	1	1	32
	3BC02030	STAY,PAPER FEED	1	1	1	32
	3BC02040	MOUNT,DF PCB	2	2	2	32
◉	3BC04011	COVER,PAPER FEED	1	1	1	31
◉	3BC07010	PULLEY,LEADING FEED	1	1	1	34
◉	3BC07020	PULLEY,SEPARATION	2	2	2	34
	3BC07031	UPPER GUIDE,PAPER FEED	1	1	1	34
	3BC07040	LOWER GUIDE,PAPER FEED	2	2	2	34
	3BC07050	LIFT PLATE,PAPER FEED	1	1	1	34
	3BC07060	MOUNT,SEPARATION PULLEY	1	1	1	34
	3BC07071	ARM,SEPARATION PULLEY	2	2	2	34
	3BC07080	SHAFT,LEADING FEED	1	1	1	34
	3BC07090	FRONT SHAFT,PAPER FEED	1	1	1	34
	3BC07100	REAR SHAFT,PAPER FEED	1	1	1	34
	3BC07111	SHAFT,SEPARATION	1	1	1	34
	3BC07120	SHAFT,LIFT PLATE	1	1	1	34
◉	3BC07130	ONE-WAY CLUTCH 6	2	2	2	34
	3BC07161	MOUNT,LIFT SOLENOID	1	1	1	34
◉	3BC07170	BELT 138,LEADING FEED	1	1	1	34
	3BC07181	ACTUATOR,ORIGINAL SET	1	1	1	34
	3BC07200	MOUNT,SET SWITCH	1	1	1	34
	3BC07210	SPRING,ACTUATOR	1	1	1	34
	3BC07230	GUIDE,SEPARATION	1	1	1	34
	3BC07250	SPRING,LIFT PLATE	1	1	1	34
	3BC07260	STOPPER,ORIGINAL	1	1	1	34
	3BC07270	SHEET,LIFT PLATE PAPER FEED	2	2	2	34
	3BC07290	UPPER SHEET,GUIDE PAPER FEED	1	1	1	34
	3BC07300	LEVER B,LIFT	1	1	1	34
◉	3BC07311	STATIC ELIMINATOR,EJECT	1	1	1	34
◉	3BC07320	PAD,LIFT	1	1	1	34
	3BC07330	PIN B,PAPER FEED GUIDE	1	1	1	35
◉	3BC07340	FRONT STATIC ELIMINATOR,EJECT	1	1	1	34
	3BC08011	RIGHT GUIDE,REGISTRATION	1	1	1	36
	3BC08020	GUIDE PLATE,EJECT	1	1	1	36
	3BC08031	GUIDE,RESISTANCE	1	1	1	35
	3BC08042	GUIDE,EJECT	1	1	1	35
◉	3BC08050	ROLLER,REGISTRATION	1	1	1	36
	3BC08061	SHAFT,EJECT PULLEY	2	2	2	35
	3BC08071	MOUNT,TIMING SWITCH	1	1	1	36
	3BC08081	LEVER,EJECT	1	1	1	36
	3BC08090	SHAFT,REGISTRATION PULLEY	1	1	1	35
	3BC08130	SPRING,REGISTRATION PULLEY	2	2	2	35
	3BC08140	SHEET,EJECT PULLEY	2	2	2	35
◉	3BC08150	INNER ROLLER,CONVEYING	1	1	1	36
	3BC08160	GUIDE,EJECT FEED SHIFT	1	1	1	36
	3BC08180	REINFORCEMENT,REGISTRATION GUIDE	1	1	1	35
	3BC08190	HANDLE,REGISTRATION GUIDE	2	2	2	35
◉	3BC08220	PULLEY B,REGISTRATION	3	3	3	35
	3BC22010	TENSION PLATE,CONVEYING ROLLER	1	1	1	36
	3BC22020	MOUNT,IDLE GEAR	1	1	1	37
	3BC22030	MOUNT,PAPER FEED MOTOR	1	1	1	37
	3BC22040	MOUNT,CONVEYING MOTOR	1	1	1	37
	3BC22050	TENSION PLATE,PAPER FEED MOTOR	1	1	1	37
	3BC22060	MOUNT,DF WIRE	1	1	1	38
◉	3BC22070	BELT 190,PAPER FEED MOTOR	1	1	1	37
◉	3BC22080	BELT 112,REGISTRATION ROLLER	2	2	2	36,37
◉	3BC22090	BELT 140,MIDDLE ROLLER	1	1	1	36
◉	3BC22100	BELT 100,CONVEYING	1	1	1	37
	3BC22110	SPRING,CONVEYING ROLLER	1	1	1	36
	3BC27013	WIRE,PAPER FEED	1	1	1	38
	3BC27020	WIRE,INTERFACE	1	1	1	38
	3BR07180	SPRING,SEPARATION PULLEY	2	2	2	34
◉	3CF04050	PLATE NUMBER 3	1	1	1	4
◉	3CF04060	PLATE NUMBER4	1	1	1	5
	3C002010	RIGHT REINFORCEMENT,COVER	1	1	1	31

• Parts with "◉" indicates the Service parts.

SP	Part. No.	Description	Quantity			Fig. No.
			120V	230V	240V	
◉	3C004010	FRONT COVER	1	1	1	31
◉	3C004020	REAR COVER	1	1	1	31
◉	3C004030	STOPPER,EJECT ORIGINAL	1	1	1	31
	3C004040	HANDLE,HOOK	1	1	1	31
◉	3C004050	LEFT COVER	1	1	1	31
◉	3C005020	LABEL,HINGE CAUTION	1	1	1	31
	3C005030	RATING PLATE(C)	1	1	1	31
◉	3C006010	TABLE,ORIGINAL	1	1	1	33
◉	3C006020	COVER,TABLE	1	1	1	33
◉	3C006030	COVER,ORIGINAL GUIDE	1	1	1	33
	3C007010	FRONT HOOK,LEFT COVER	1	1	1	31
	3C007020	REAR HOOK,LEFT COVER	1	1	1	31
◉	3C027020	SENSOR,TIMING SWITCH	1	1	1	36
◉	33415181	GEAR,TONER SUPPLY	1	1	1	29
◉	33420210	BEARING,HEAT ROLLER	2	2	2	19
◉	33420220	BUSHING,HEAT ROLLER	2	2	2	19
◉	33421390	PULLEY,EJECT	4	4	4	26
◉	33422290	JOINT,DRIVE	1	1	1	22
	33422301	COUPLER,DRIVE	1	1	1	22
◉	33522100	BELT 117,VERTICAL CONVEYING	1	1	1	10
◉	33900120	SUB HOPPER ASS'Y	1	1	1	30
◉	33900940	CLEANING PAD ASS'Y	1	1	1	20
	33902120	HOOK,CASSETTE RETAINING	3	3	3	2,3
	33902130	SPRING,CASSETTE HOOK	3	3	3	2,3
◉	33906060	LOWER PULLEY,PAPER FEED	5	5	5	6,7,27
◉	33906070	TORQUE LIMITER,PAPER FEED	4	4	4	6,7
	33906080	SHAFT,LEADING FEED PULLEY	4	4	4	6,7
	33906090	LOWER LEVER,PAPER FEED PULLEY RELE	3	3	3	7
◉	33906130	CLUTCH,BYPASS	1	1	1	27
◉	33906160	GEAR 16,PAPER FEED	4	4	4	6,7
	33906180	WEIGHT,LEADING FEED PULLEY	4	4	4	6,7
◉	33906211	VIBRATION INSULATOR,RELEASE LEVER	6	6	6	7
◉	33906220	PAD,BYPASS CURSOR	2	2	2	28
◉	33906370	SOLENOID,BYPASS	2	2	2	21,27
	33906390	SPRING,SHAFT STOPPER	1	1	1	27
◉	33906400	FRICTION PLATE,BYPASS	1	1	1	27
◉	33906430	TORQUE LIMITER,BYPASS	2	2	2	27,34
	33906441	UPPER GUIDE,BYPASS	1	1	1	27
◉	33906470	PULLEY,LEADING FEED	1	1	1	27
	33906551	LOWER SPRING B,PAPER FEED	3	3	3	7

SP	Part. No.	Description	Quantity			Fig. No.
			120V	230V	240V	
◉	33906610	BEARING,FEED	9	9	9	7,27
	33906620	MOUNT BASE,PAPER FEED SWITCH	5	5	5	7,27
◉	33906630	STOPPER 5,RING	15	15	15	6,7
	33906670	RIGHT HOOK,FEED RELEASE	4	4	4	26,28
	33906880	STOPPER,BYPASS TABLE	2	2	2	28
	33906900	COVER,CURSOR	1	1	1	28
	33906910	SHAFT,SEPARATION PULLEY	1	1	1	27
	33906920	SHAFT,JOINT	1	1	1	27
	33906941	MOUNT,STOPPER	1	1	1	27
	33906950	SHAFT,LEADING FEED PULLEY BYPASS	1	1	1	27
	33906980	LEVER,STOPPER RELEASE	1	1	1	27
◉	33906990	SWITCH,BYPASS SIZE DETECTION	1	1	1	28
	33907020	WORK PLATE,CASSETTE	2	2	2	3
◉	33907080	LEVER,CASSETTE CURSOR	4	4	4	3
◉	33907090	LID A,CURSOR	2	2	2	3
◉	33907130	CURSOR C,CASSETTE	2	2	2	3
	33907140	LID C,CURSOR	2	2	2	3
	33907180	DETECTION PLATE,CASSETTE		2	2	3
	33907210	CUSHION,CASSETTE WORK PLATE	4	4	4	3
◉	33910230	PIN CHARGER	3	3	3	9,20
	33914070	SPIRAL A,DEVELOPING	1	1	1	13
	33914080	SPIRAL B,DEVELOPING	1	1	1	13
	33914090	SPIRAL C,DEVELOP	1	1	1	13
◉	33914130	GEAR A,SPIRAL	1	1	1	13
◉	33914140	FRONT GEAR B,SPIRAL	1	1	1	13
◉	33914150	GEAR C,SPIRAL	1	1	1	13
◉	33914190	TONER SENSOR	1	1	1	13
	33914250	PRESSING PLATE,DEVELOPING	1	1	1	8
	33914261	RAIL,IMAGE FORMATION	1	1	1	8
◉	33914290	FRONT FILM,DEVELOPING	1	1	1	13
◉	33914300	REAR FILM,DEVELOPING	1	1	1	13
◉	33914310	SPONGE A,COVER DEVELOPING	1	1	1	13
◉	33914330	SPONGE C,COVER DEVELOPING	1	1	1	13
◉	33914340	FRONT SEAL,DEVELOPING UNIT	1	1	1	13
◉	33914350	REAR SEAL,DEVELOPING UNIT	1	1	1	13
	33914370	COUPLING,SUB HOPPER DRIVE	1	1	1	13
◉	33915180	TONER EMPTY DETECTION SENSOR	1	1	1	29
	33915530	SPIRAL,SUB HOPPER	1	1	1	30
◉	33915540	COUPLING,SUB HOPPER	1	1	1	30
	33915550	SHUTTER,SUB HOPPER	1	1	1	30

• Parts with "◉" indicates the Service parts.

SP	Part. No.	Description	Quantity			Fig. No.
			120V	230V	240V	
	33915560	COVER,SUB HOPPER SHUTTER	1	1	1	30
	33915570	SPRING,SUB HOPPER	1	1	1	30
	33917211	WORK PLATE,CLEANING SLIDER	2	2	2	9,20
	33917230	SLIDER,TRANSFER CLEANING	2	2	2	20
	33918030	PIN,BLADE	1	1	1	26
◉	33918100	GEAR 18,FUR BRUSH	2	2	2	35,36
◉	33920140	GEAR,HEAT ROLLER	1	1	1	19
	33920170	SHAFT,PRESSURE ROLLER	1	1	1	19
	33920190	BOLT,PRESSURE	2	2	2	19
◉	33920310	DIAL,FIXING DRIVE	1	1	1	18
◉	33920320	JOINT,FIXING DRIVE	1	1	1	18
	33920330	SPRING,FIXING DRIVE	1	1	1	18
	33920580	STOPPER,HEAT ROLLER	2	2	2	19
◉	33920800	THERMOSTAT 150,FIXING(B)	1	1	1	19
◉	33921140	GEAR 26,EJECT DRIVE	3	3	3	16,21,22
◉	33922241	PULLEY 31/42,IDLE	2	2	2	21
◉	33922330	GEAR 30,IDLE	1	1	1	21
◉	33922370	BUSHING,DRUM DRIVE	1	1	1	22
◉	33922380	COUPLING,DRUM DRIVE	1	1	1	22
◉	33922390	COUPLING,DEVELOPING DRIVE	2	2	2	22
◉	33922400	JOINT,DEVELOPING DRIVE	2	2	2	22
	33922460	SPRING,DEVELOPING DRIVE	2	2	2	22
◉	33922470	BUSHING,DUPLEX DRIVE	2	2	2	2,21
	33927210	WIRE,CASSETTE UNIT	2	2	2	3
	33927450	RETAINING PIN,DRAWER	4	4	4	39
	33927460	WIRE,TONER CONTROL SENSOR	1	1	1	13
	33927590	CORE 7-15X18		2	2	10
◉	33928111	SIZE DETECTION PCB	3	1	1	3,28
◉	33973300	STOPPER 7,CARTRIDGE	10	10	10	6,17,18 24,26,39
	34010301	MOUNT,POTENTIAL SENSOR	1	1	1	40
◉	34027070	RELAY 4P,POWER	1	1	1	39
	34027120	MOUNT BASE,POWER RELAY	1	1	1	39
◉	34093331	PARTS SENSOR SURFACE POTENTIAL(SP)	1	1	1	40
◉	34806140	STOPPER 4	2	2	2	34,35
◉	34806150	STOPPER 5	16	16	16	6,10,21 22,27,34
◉	34806480	STOPPER 6	25	25	25	21,22
◉	34817240	LOWER CLEANER,REGISTRATION	1	1	1	17
◉	34817260	TERMINAL,TRANSFER CONNECTOR	1	1	1	40

SP	Part. No.	Description	Quantity			Fig. No.
			120V	230V	240V	
◉	34817270	TERMINAL,SEPARATION CONNECTOR	1	1	1	40
	34909030	FRONT BUSHING,DRUM SHAFT	1	1	1	21
	34920170	FULCRUM PIN,FIXING	2	2	2	15
	34920190	GROUND PLATE,FIXING UNIT	2	2	2	37
◉	34922220	GEAR 18,RETARD	4	4	4	6,7
◉	34922460	PULLEY 16	1	1	1	21
	34922530	COLLAR,PULLEY	2	2	2	18,25
◉	35327400	SWITCH,FEED	2	2	2	34,36
◉	35911450	CONTACT GLASS,ADF	1	1	1	11
◉	35911520	PULLEY 16,ADF	1	1	1	18
◉	35912010	CONTACT GLASS	1	1	1	11
◉	35912060	PULLEY,SCANNER DRUM	2	2	2	10
	35912210	SPRING,MIRROR HOLDER	2	2	2	10
◉	35912340	PULLEY,SCANNER DRIVE	1	1	1	10
	35912360	GUIDE FFC2	1	1	1	10
◉	35912490	FRONT ORIGINAL SIZE INDICATOR	1	1	1	11
◉	35912531	SPONGE,ORIGINAL SIZE INDICATOR	1	1	1	11
◉	35927290	SENSOR,ORIGINAL DETECTION	2	1	1	10
◉	35968010	FLASH JIG PCB	1	1	1	42
◉	35968110	STOPPER WIRE ASS'Y SP	2	2	2	42
	36526440	MOUNT,VENDOR CONNECTOR	1	1	1	39
	36704181	SHAFT,TONER SUPPLY HINGE	1	1	1	29
	36706150	SHAFT,FEED PULLEY	5	5	5	27,28
◉	36706310	BUSHING,PAPER FEED	4	4	4	6,7
	36707881	RIGHT MOUNT,RAIL	1	1	1	2
	36708090	GROUND PLATE,STAY DRUM	2	5	5	10
	36710041	FRONT HOUSING,MC	1	1	1	9
	36710050	REAR HOUSING,MC	1	1	1	9
	36710061	FRONT HOUSING,GRID	1	1	1	9
	36710070	REAR HOUSING,GRID	1	1	1	9
◉	36710100	TERMINAL,MAIN CHARGER	1	1	1	9
◉	36710111	SLIDER,MC CLEANING PAD	2	2	2	9
◉	36710120	LEVER,MC CLEANING PAD	2	2	2	9
	36710131	HOLDER,GRID CLEANING PAD	1	1	1	9
	36710140	PAD,GRID WIRE CLEANING	1	1	1	9
◉	36710220	TERMINAL,MAIN HIGH VOLTAGE	1	1	1	39
	36710271	RETAINING PIN,MAIN CHARGER	1	1	1	9
	36710290	PLATE SPRING,MC HOLDER	2	2	2	8
◉	36714110	GEAR,DEVELOPING SLEEVE	1	1	1	22
	36715140	SPRING,HOPPER AGITATION	2	2	2	29

• Parts with "◉" indicates the Service parts.

SP	Part. No.	Description	Quantity			Fig. No.
			120V	230V	240V	
◉	36715210	MOTOR,TONER AGITATION	1	1	1	29
◉	36715380	GEAR 41,HOPPER AGITATION	1	1	1	29
◉	36715550	SEAL,HOPPER	1	1	1	29
	36715560	STOPPER,HOPPER	2	2	2	29
	36715570	SPRING,HOPPER	2	2	2	29
◉	36715600	SPONGE,DUCT HOPPER	1	1	1	29
◉	36715630	GEAR 13,HOPPER DRAW	1	1	1	29
◉	36715640	GEAR 22,HOPPER	1	1	1	29
◉	36715650	GEAR 22/13,IDLE	1	1	1	29
◉	36715660	GEAR 23/44,TONER MOTOR	1	1	1	29
	36715730	FILM,HOPPER LID	1	1	1	29
◉	36716031	HANDLE,CONVEYING	1	1	1	16
	36716110	SHAFT,RELEASE PULLEY	2	2	2	16
	36716330	SPRING,TRANSFER PRESSING	4	4	4	16
	36716600	SPACER,CONVEYING HANDLE	1	1	1	16
	36716670	SPRING,TRANSFER ELECTRODE	1	1	1	9
	36717120	GUIDE FILM,DUPLEX CONVEYING	1	1	1	29
	36718150	SPRING,SHUTTER	1	1	1	14
◉	36720390	GEAR,FIXING EJECT JOINT	1	1	1	18
◉	36720493	CLAW,PRESS ROLLER	4	4	4	19
◉	36722540	GEAR 26,IDLE	3	3	3	21
	36723560	JUNCTION PLATE,JOINT	1	1	1	22
	36723590	FLANGE 30,BELT	1	1	1	21
	36726140	LID,VENDOR	1	1	1	39
◉	36768081	GRID CLEANING PAD ASS'Y	1	1	1	9
◉	36793270	PARTS,MOTOR TONER SUPPLY(SP)	1	1	1	29
◉	36808230	PULLEY,ARM LARGE	8	8	8	24,26
◉	36827140	SWITCH A,INTERLOCK	2	2	2	32,34
	41525016	SOCKET,KEY COUNTER	2	2	2	43
	41529210	SOCKET ASS'Y,KEY COUNTER	1	1	1	43
◉	45569005	CENTRAL BEARING	1	1	1	22
◉	45727303	GEAR 26,CLUTCH	3	3	3	17,24,25
◉	45727501	GEAR,TONER FEED ROLLER	3	3	3	7
◉	45728104	GEAR 20,DEV.UNIT	1	1	1	27
◉	45728116	GEAR 28,JOINT	1	1	1	25
◉	45728802	TENSION GEAR 15	1	1	1	6
◉	45729103	GEAR 17,PF BELT ROLLER	1	1	1	25
◉	45729403	GEAR 19,S.B	2	2	2	16,22
◉	45729418	DRIVE GEAR,PRE-TRANSFER	1	1	1	25
◉	45729421	GEAR 30,SEPARATION	1	1	1	22

SP	Part. No.	Description	Quantity			Fig. No.
			120V	230V	240V	
	48129000	PIN,ORIGINAL HOLDER	1	1	1	25
	48129208	PIN,TENSION	1	1	1	19
◉	48527200	SPRING,CHARGER	3	3	3	9,20
	48529412	SPRING,LEVER	1	1	1	26
◉	48927324	PULLEY,CLEANING UNIT	2	2	2	16
◉	48928800	PULLEY,TIMING BELT	2	2	2	36,37
	49021301	BUSHING, CUTTER	1	1	1	22
◉	49028116	BUSHING 6,CLEANING UNIT	3	3	3	14,30
◉	5MVX111DN003	RING STOPPER	15	15	15	4,5,6,28
						29
	60116080	PIN RAIL DEV.	1	1	1	18
◉	60606101	BUSHING FEED BACK ROLLER	3	3	3	27,35
◉	60804120	MAGNET CATCH	1	1	1	1
◉	60907170	CUSHION,CASSETTE R	4	4	4	3
◉	60907880	BUSHING,BYPASS SHAFT	7	7	7	6,7
◉	60907910	PAD,BYPASS	1	1	1	27
	60912270	BEARING,688ZZ	4	4	4	27
◉	61522040	DRIVE GEAR,FIXING SECTION	1	1	1	39
◉	61705110	LABEL,PAPER UPPER LIMIT	2	2	2	3
◉	61706770	UPPER PULLEY,BYPASS	1	1	1	27
	61710190	HOLDER,MC CLEANING PAD	2	2	2	9
	61710330	WIRE,GRID(SUS)	1	1	1	9
◉	61710610	TERMINAL,GRID CATCHER	1	1	1	39
◉	61720460	BUSH,FIXING CLEANING	6	6	6	19
◉	61720750	SEPARATION CLAW B	7	7	7	26
	61720760	SPRING,SEPARATION CLAW	7	7	7	26
◉	61722070	GEAR A,DUPLEX IDLE	1	1	1	22
	62207620	MAGNET, FEED SHIFT	4	4	4	6,18
◉	62218020	RATCHET,SEPARATION	4	4	4	19
	63202120	SUPPORT PLATE,COVER	3	3	3	18,31
◉	63212180	PULLEY 24,EJECT	1	1	1	22
◉	63212210	STATIC ELIMINATOR,EJECT	1	1	1	34
	63213360	SPRING,PAPER EJECT HOLDER	1	1	1	24
◉	63227150	SWITCH L,FEED	1	1	1	34
	63312120	SPRING,HOOK HAND UNIT	1	1	1	27
	63506130	SPRING,PAPER FEED	1	1	1	27
◉	63511220	STOP RING,4	8	8	8	6,7,27
	63511541	PIN,ADF	2	2	2	36
◉	63516110	SPRING,TRANSFER	2	2	2	28
	63526080	SPRING,SAFETY SWITCH LEVER	2	2	2	35

• Parts with "◉" indicates the Service parts.

SP	Part. No.	Description	Quantity			Fig. No.
			120V	230V	240V	
◉	63806290	BUSHING,6	4	4	4	7,36
◉	63814070	BUSHING,SPIRAL ROLLER	3	3	3	29
◉	63814100	IDLE GEAR 15,AGITATION	1	1	1	37
	63814260	SPRING,DEV. SHUTTER	1	1	1	36
◉	63814420	SEAL B,DEV. HOUSING	2	2	2	29
◉	63822220	GEAR,41	2	2	2	4,5
	65004171	HOLDER,SAFETY SWITCH	1	1	1	1
	65009050	SPRING,DEVELOPING ROCK	1	1	1	8
◉	65011310	GEAR 20,IDLE	1	1	1	37
◉	65016080	STOP RING E3	4	4	4	26,35,36
	65027470	CORE,7-15X18	1	1	1	38
	65706200	SEAL B,RACK	1	1	1	34
◉	65710330	PULLEY,EJECT TENSION	1	1	1	34
◉	65722030	PULLEY 22,FEED	1	1	1	26
◉	65814240	FRONT BUSHING 15,AGITATION	1	1	1	30
◉	65907210	GEAR 20,CASSETTE	1	1	1	33
	65907610	SEAL,PAPER EMPTY	1	1	1	32
◉	65914120	GEAR 18,IDLE DEVELOPING	3	3	3	3,28
	65973030	MAGNET,CARTRIDGE	2	2	2	24
◉	66006810	GEAR,16 BYPASS PULLEY	2	2	2	17,27
	66007310	PIN,CASSETTE WORK PLATE	2	2	2	3
	66008070	SPRING,DRUM DRIVE	1	1	1	32
◉	66008080	PULLEY,DRUM	2	2	2	21
◉	66015220	BUSHING 6,SPACER	1	1	1	14
◉	66018160	GEAR 19,SPIRAL ROLLER	3	3	3	8,21
◉	66018180	GEAR 26,SPIRAL ROLLER	1	1	1	37
◉	66022131	GEAR 30,DEVELOPING DRIVE	1	1	1	19
◉	66022190	GEAR,21 DEVELOPING	1	1	1	6
	66060022	RETAINER,KEY COUNTER COVER	1	1	1	43
	66060030	RETAINER,KEY COUNTER	1	1	1	43
	66060040	MOUNT,KEY COUNTER	1	1	1	43
	66106080	SPRING,PAD	2			3
◉	66107084	SLIDER,CASSETTE	4	4	4	2,3
◉	66107100	PAD,CASSETTE	2	2	2	3
◉	66127010	SWITCH,COVER OPEN	3	3	3	15,39
◉	66206190	LOWER PULLEY 26,FEED	2	2	2	34
	66222140	BUSHING,BYPASS CAM	2	2	2	19,21
	66222180	SPRING,DRUM DRIVE	1	1	1	22
◉	66321430	FEEDBACK PULLEY	1	1	1	26
◉	66768200	PULLEY DUPLEX ASS'Y	4	4	4	24

SP	Part. No.	Description	Quantity			Fig. No.
			120V	230V	240V	
◉	67322230	BUSHING 8	46	46	46	4,5,6,7,8 16,17,18 22,24,25 26,27,39 40
	68320310	SPRING,SEPARATION CLAW	4	4	4	19
◉	68321260	GEAR 18,SWITCH BACK	1	1	1	25
	68705040	RIGHT LABEL,MIDDLE TRAY RELEASE	1	1	1	24
◉	68707020	LOWER GUIDE,DUPLEX FEED	1	1	1	7
	68720120	LEVER B,FEED SHIFT SOLENOID	1	1	1	18
◉	68721080	LOWER ROLLER,DUPLEX REGISTRATION	1	1	1	23
	68721210	RETAINER,DUPLEX REGISTRATION	1	1	1	23
	68721220	PRESSING PLATE,DUPLEX REGISTRATION	2	2	2	23
	68721571	TENSION PLATE,DUPLEX CONVEYING	1	1	1	25
◉	68721600	GEAR,DUPLEX JOINT	1	1	1	24
◉	68721630	PULLEY 40,DUPLEX CONVEYING	1	1	1	24
◉	68721640	PULLEY 20,DUPLEX CONVEYING	5	5	5	6,25
◉	68721660	BELT 600,DUPLEX CONVEYING	1	1	1	25
	68721740	PIN,DUPLEX CONVEYING FULCRUM	2	2	2	23
◉	68721750	ROLLER B,DUPLEX CONVEYING	1	1	1	25
	68721760	SPRING,TRAILING EDGE TAPPING	1	1	1	25
	68721771	RIGHT GUIDE,MIDDLE TRAY	1	1	1	24
	68721780	RETAINING PIN,CONVEYING	2	2	2	23
◉	68721840	GROUND PLATE,DUPLEX	2	2	2	16,23
◉	68727030	SWITCH,DUPLEX CONVEYING	3	3	3	23
	71802210	PIN,DRUM LIFT	3	3	3	16,22
◉	71807200	GEAR 20,REFEED PULLEY	1	1	1	22
◉	71808260	PULLEY,DRUM TENSION	1	1	1	22
◉	71814100	BUSHING 6-21,MAIN UNIT	2	2	2	13,29
◉	71814130	BUSHING 6-23,MAIN UNIT	1	1	1	13
◉	71815110	IDLE GEAR 18,SUB UNIT	5	5	5	7,8,27
◉	71821390	IDLE GEAR 48	1	1	1	6
◉	71907110	GEAR 23,DUPLEX FEED PULLEY	1	1	1	21
◉	72107160	BUSHING 6,LOWER REGISTRATION ROLLE	8	8	8	17,18,24 25,27
◉	72107760	BUSHING 6,REGISTRATION ROLLER	4	4	4	18,24,25
	72112520	TENSION SPRING,SCANNER WIRE	2	2	2	10
	72114870	V-RING 6 DIA	4	4	4	40
	72118141	SPRING,CLEANING BLADE	3	3	3	21,31
◉	72118160	GEAR 22,SPIRAL ROLLER	2	2	2	25

• Parts with "◉" indicates the Service parts.

SP	Part. No.	Description	Quantity			Fig. No.
			120V	230V	240V	
◉	72127100	PI SWITCH,OPTICAL SECTION	1	1	1	10
	72418140	SPRING, BLADE	4	4	4	2,18,22,39
	72418480	SPRING, SPIRAL ROLLER	2	2	2	36
	72518060	PIN B,DISPOSAL TANK FULCRUM	3	3	3	23,27
◉	72622050	GEAR 25,FEED LOOP	2	2	2	16,27
◉	72622060	GEAR,CENTRAL LEAD ROLLER	1	1	1	6
◉	72622130	UPPER PULLEY,CENTRAL LEAD ROLLER	1	1	1	21
◉	72622141	TENSION PULLEY 20	2	2	2	21
	72907110	SPRING,PAPER GUIDE PULLEY	4	4	4	26
	72918050	PIN,BLADE ARM	1	1	1	18
◉	72922130	GEAR 18/26	1	1	1	22
◉	73210450	BUSH, 6	25	25	25	6,7,14,19
						21,24,25
						34,36
	73226040	SPRING,REVERSE SOLENOID	1	1	1	18
	73808100	SPRING, MC BRUSH	1	1	1	22
	73818100	SPRING, BLADE THRUST	1	1	1	34
◉	73905191	LABEL,SUPPLY(E,F,S)	1	1	1	1
	73918080	PIN,CLEANING BLADE	4	4	4	8,36
◉	74306520	JOINT,PULLEY DRIVE SHAFT	2	2	2	27,34
◉	74318070	BUSHING 8,TONER DISPOSAL	1	1	1	39
◉	74318080	GEAR 25,TONER DISPOSAL	2	2	2	39
	74318310	TAPE,TONER DISPOSAL TANK	1	1	1	15
◉	74322340	GEAR 32,DUPLEX	2	2	2	21,22
◉	74669000	TUNGSTEN WIRE(OX) S•P (50M)	2	2	2	20
◉	74718091	BUSHING CLEANING UNIT	1	1	1	40
◉	74718390	OVERFLOW SENSOR	1	1	1	15
◉	74808080	BEARING,686ZZNR	10	10	10	18,36
	75018250	SPRING CLEANING SOLENOID	1	1	1	37
	75704300	CATCH FRONT COVER	3	3	3	29,39
◉	75706040	STOPRING PAPER FEED PULLEY	2	2	2	27
	75712080	MIRROR HOLDER	4	4	4	10
	75714210	COLLAR DEVELOPING UNIT	2	2	2	36,37
◉	75720070	STATIC ELIMINATOR HEAT ROLLER	1	1	1	19
◉	75722252	IDLE PULLEY 15	1	1	1	25
◉	75915090	BUSHING AGITATION ROTOR SHAFT	4	4	4	13
	76007150	SPRING PAPER PAD PULLEY	2	2	2	25
◉	76221040	GEAR 28 FD	1	1	1	37
	76610320	PIN TENSION PULLEY	4	4	4	10
◉	76727010	ORIGINAL SIZE SWITCH	1	1	1	28

SP	Part. No.	Description	Quantity			Fig. No.
			120V	230V	240V	
	77502090	LID FINISHER CABLE	1	1	1	39
	77706240	JOINT PAPER FEED	2	2	2	27
	77706461	PRESSING SPRING	12	12	12	17,27,28
	77906200	CASSETTE CATCHER	1	1	1	39
	77906210	CASSETTE STOPPER	4	4	4	3,6,29
	78112040	SPRING CIS	4	4	4	23
	78607460	KNOB CONVEYING SECTION	1	1	1	6
◉	78706241	FILTER CF SENSOR	1	1	1	33
	78722151	PULLEY 20	2	2	2	37
◉	78722210	GEAR 18 EJECT	1	1	1	27
◉	78727110	JAM DETECTION SWITCH	1	1	1	33
◉	78918320	PULLEY 30	1	1	1	18
◉	82142540	KEY COUNTER	1	1	1	43
	B1104120	BINDING SCREW VM4X12 (CR)	4	4	4	43
	B1104200	BINDING SCREW VM4X20(CR)	1	1	1	43
	B1243080	BINDING SCREW WITH LOCK TVM3X8	1	1	1	43
	B1303080	BINDING SCREW BVM3X8 (BLACK)	1	1	1	43
	B1304300	BINDING SCREW BVM4X30 (BLACK)	1	1	1	43
	B2303060	COUNTER-SUNK HEAD SCREW BFHM3X6 (B	2	2	2	43
	B4104060	TRIPLE SCREW M4X6(CHROMIUM)	1	1	1	43
	B4144120	TRIPLE TAP-TITE P SCREW M4X12(CHRO	2	2	2	43
	B4304060	TRIPLE SCREW M4X6 (BLACK)	4	4	4	43
	B4304100	TRIPLE SCREW M4X10 (BLACK)	2	2	2	43
	B4304200	TRIPLE SCREW M4X20(BLACK)	1	1	1	43
	C2303000	NUT BNM3 (BLACK)	1	1	1	43
◉	G3006880	BEARING #688ZZ	1	1	1	13
	J0144080	CASE,175694-8(AMP)	3	3	3	7
	J0220040	PLUG EL 4P,ELP-04V	1	1	1	43
	J0463080	PLUG,QR/P15-8S-C(HIROSE)	2			3
	J0464080	RECEPTACLE,QR/P15-8S-C(02)(HIROSE)	2	2	2	39
	M0207000	BINDING BAND,KB-100-1	1	1	1	34
	M1203200	OPEN BUSHING,OCB-375	3	3	3	32
	M1203550	STRAIN RELEAF BUSHING,SR-7W-2	1	1	1	38
◉	M1654020	FUSE,237004(LITTEL FUSE)	1			39
◉	M1654030	FUSE,218004(LITTLE-FUSE)		1	1	39
◉	M1658010	FUSE,218008(LITTEL-FUSE)		2	2	39
◉	M1658020	FUSE,237008(LITTLE-FUSE)	2			39
◉	M1658030	FUSE,215008(LITTEL-FUSE)		1	1	39
◉	M1661000	FUSE 15A,314015	1			39
	M2104200	EDGING EDS-1	5	5	5	7,32

• Parts with "◉" indicates the Service parts.

SP	Part. No.	Description	Quantity			Fig. No.
			120V	230V	240V	
	M2104210	EDGING,EDS-2	6	6	6	19,23,40
	M2104220	EDGING,EDS-1717U	1	1	1	40
	M2104250	EDGING,EDS-17L(KITAGAWA)	7	7	7	11,23,39
	M2104260	EDGING,EDS-0607U(KITAGAWA)	24	24	24	6,7,8,18 19,21,22 23,27,29 39,40,41
	M2104280	EDGING,EDS-25L(KITAGAWA)	3	3	3	40
	M2105040	NYLON CLAMP 6N,NK-6N	1	1	1	38
	M2105720	MINIATURE CLAMP,UAMS-05-2	5	5	5	27,34,36
	M2105730	MINIATURE CLAMP,UAMS-07-0	9	6	6	10,32
	M2105740	MINIATURE CLAMP,UAMS-05S-2	26	26	26	6,8,18,19 22,23,24 27,29
	M2105770	CLAMP,UAMS-09-0(KITAGAWA)	2	2	2	2,6
	M2107120	BINDING BAND SG-130	24	24	24	2,6,17,23 24,27,36
	M2108000	SPACER,KGLS-3S	8	8	8	3,10,40
	M2108120	SPACER,KGLS-4S	3	3	3	40
	M2108850	SPACER,KGPS-8RF(KITAGAWA)	2	2	2	40,41
	M2108880	SPACER,KGPS-5RF(KITAGAWA)	1	1	1	41
	M2108930	SPACER,KGLS-8RT(KITAGAWA)	2	2	2	40
	M2108950	SPACER,KGPS-18S(KITAGAWA)	2	2	2	32
	M2109000	WIRE SADDLE,WS-1NS	10	10	10	2,12,40
	M2109010	WIRE SADDLE,WS-2NS	22	22	22	2,10,11 12,39,40
	M2109030	WIRE SADDLE,WS-3NS	2	2	2	40
	M2109080	LOCKING WIRE SADDLE,LWS-4NS	1	1	1	32
	M2109210	LOCKING WIRE SADDLE,LWS-8S-2.5W	12	12	12	2,11,39,40
	M2109260	WIRE SADDLE,YMC-05-H-0(KITAGAWA)	7	7	7	32,35,37
	M2109270	WIRE SADDLE,LWS-5S-2W(KITAGAWA)	1	1	1	12
	M2109350	WIRE SADDLE,YMC-15-0(KITAGAWA)	1	1	1	34
	M2307010	BINDING BAND,T18R	17	17	17	7,27,40
	M2505170	CLAMP,GNK-2N(NIKKO)		2	2	10,11
	M2505190	CLAMP,GNK-4N(NIKKO)	2	3	3	11
	M2505720	MINIATURE CLAMP,UAMS-05-2	1	1	1	27
	M2607010	BINDING BAND,PLT1M	8	8	8	23,34,35 40

• Parts with "◉" indicates the Service parts.

CLASSIFICATION OF THE SCREWS IN ILLUSTRATION

REF.	ITEM #	DESCRIPTION
AAJ	B0003200	ROUND HEAD SCREW M3X20
ABH	B0304300	ROUND HEAD SCREW M4X30 (BLACK)
ABW	B0300930	THREAD FORMING SCREW 6-32X0.25(INCH)
AFM	B0703100	ROUND HEAD SCREW M3X10 (STAINLESS)
AWM	B0323050	ROUND HEAD SCREW WITH SW.W M3X5 (BLACK)
AXC	B0004300	ROUND HEAD SCREW M4X30
AXE	B0004400	ROUND HEAD SCREW M4X40
BAL	B1003050	BINDING SCREW CVM3X5
BAN	B1004060	BINDING SCREW CVM4X6
BBA	B1303040	BINDING SCREW BVM3X4 (BLACK)
BBB	B1303050	BINDING SCREW BVM3X5 (BLACK)
BBC	B1303100	BINDING SCREW BVM3X10 (BLACK)
BBD	B1304040	BINDING SCREW BVM4X4 (BLACK)
BBE	B1304060	BINDING SCREW BVM4X6 (BLACK)
BBG	B1304100	BINDING SCREW BVM4X10 (BLACK)
BBM	B1304120	BINDING SCREW BVM4X12 (BLACK)
BBO	B1304300	BINDING SCREW BVM4X30 (BLACK)
BBP	B1303120	BINDING SCREW BVM3X12 (BLACK)
BBR	B1303080	BINDING SCREW BVM3X8 (BLACK)
BBU	B1303140	BINDING SCREW BVM3X14 (BLACK)
BEA	B1603050	BINDING SCREW M3X5 (BRASS,NI)
BEO	B1603140	BINDING SCREW M3X14(BRASS NI)
BHC	B3024060	BINDING TAP-TIGHT SCREW M4X6
BHD	B3024080	BINDING TAP-TIGHT SCREW M4X8
BHF	B3314080	BINDING TAP-TITE P SCREW M4X08
BHI	B3313080	BINDING TAP-TITE SCREW M3X08
BHV	B3313060	+BINDING TAP-TIGHT P BRONZE SCREW M3X06
BVV	B1324080	BINDING SCREW WITH SW (BLACK) M4X8
BVW	B1304050	CROSS-RECESSED BINDING HEAD BRONZE SCREW M4X05
BVX	B1325080	BINDING SCREW WITH SW (BLACK) M5X08
CHA	B2803060	COUNTER-SUNK HEAD POLYESTER SCREW FHPVM3X6
CHB	B2803100	COUNTER-SUNK HEAD POLYESTER SCREW FHPVM3X10
DJB	B5003040	HEX. SOCKET HEAD SCREW HHM3X4
DJG	B5004060	HEX. SOCKET HEAD SCREW HHM4X6
EDB	B9094060	SPECIAL TRUSS HEAD SCREW M4X06
EFG	B3003200	TAPPING SCREW M3X20(B-TYP)
E03	D1000300	STOP RING (E-3)
E04	D1000400	STOP RING (E-4)
E05	D1000500	STOP RING (E-5)
E07	D1000700	STOP RING (E-7)
E09	D1000900	STOP RING (E-9)
GEA	B9604080	GROUNDING SCREW M4X8 (BRASS,N;)
GHA	B9082080	SHOLDEK,M2X6+2
HAK	B4003060	TRIPLE SEREW M3X6
HBA	B4303050	TRIPLE SCREW M3X5 (BLACK)
HBD	B4304060	TRIPLE SCREW M4X6 (BLACK)
HBH	B4303060	TRIPLE SCREW M3X6 (BLACK)
HBI	B4303080	TRIPLE SCREW M3X8(BLACK)
HBQ	B4303120	TRIPLE SCREW M3X12(BLACK)
HCA	B4104060	TRIPLE SCREW M4X6(CHROMIUM)
HCF	B4104080	TRIPLE SCREW M4X08(CHROMIUM)
HCL	B4103060	TRIPLE SCREW M3X06(CHROMIUM)
HDA	B4343060	TRIPLE TAP-TITE P SCREW M3X06(BLACK)
HDB	B4343080	TRIPLE TAP-TITE P SCREW M3X08(BLACK)
HDC	B4344080	TRIPLE TAP-TITE P SCREW M4X08(BLACK)
KAK	E0020080	SPRING PIN 2X8
KAL	E0020100	SPRING PIN 2X10
KAM	E0020120	SPRING PIN 2X12
KAN	E0020140	SPRING PIN 2X14
KAO	E0020160	SPRING PIN 2X16
KAX	E0030140	SPRING PIN 3X14
KBA	E0120120	SPRING PIN 2X12 (SUS)
KKB	E0030240	SPRING PIN 3X24
KKJ	E0025250	SPRING PIN 2.5X25
NAD	C1004000	NUT NM4
RAH	D2000800	STOP RING S8
RAJ	D2001000	CIRCLIP 10 (2123011)
RDD	D4000400	STOP RING CSTW-4
RDE	D4000500	STOP RING CSTW-5
TGB	C4204000	CROWN WASHER TWM4
WEB	C2603080	PLAIN WASHER M3-8 (BRASS,N:)
WPB	C2806120	POLYESTER SLIDER WASHER 6.2X12X0.5T
XAE	C2895150	SHIM 8.2X1.0T
XBH	C2896110	SHIM,10.2-0.25T
XCF	C2895130	SHIM 8.2-0.5T
XEC	C2895950	SHIM 6.2-1.0T

KYOCERA MITA EUROPE B.V.
Hoeksteen 40, 2132 MS Hoofddorp,
The Netherlands
Phone: (020) 6540000
Home page: http://www.kyoceramita-europe.com
Email: info@kyoceramita-europe.com

KYOCERA MITA NEDERLAND B.V.
Hoeksteen 40, 2132 MS Hoofddorp,
The Netherlands
Phone: (020) 5877200

KYOCERA MITA (UK) LIMITED
8 Beacontree Plaza
Gillette Way,
Reading RG2 0BS UK
Phone: (0118) 931 1500

KYOCERA MITA ITALIA S.P.A.
Via Verdi 89/91 20063 Cernusco sul Naviglio
(Milano) Italy
Phone: 02-92179 1

S.A. KYOCERA MITA BELGIUM N.V.
Hermesstraat 8A, 1930 Zaventem, Belgium
Phone: (02) 7209270

KYOCERA MITA FRANCE S.A.
Parc les Algorithmes
SAINT AUBIN
91194 GIF-SUR-YVETTE
France
Phone: (01) 69852600

KYOCERA MITA ESPAÑA S.A.
Edificio Kyocera, Avda. De Manacor Nº2,
Urb. Parque Rozas, Apartado de Correos 76,
28230 Las Rozas, Madrid, Spain
Phone: (91) 631-8392

KYOCERA MITA FINLAND OY
Kirvesmiehenkatu 4, 00810 Helsinki,
Finland
Phone: (09) 478-05200

KYOCERA MITA (SCHWEIZ) AG
Industriestrasse 28,
8604 Volketswil, Switzerland
Phone: (01) 908 4949

KYOCERA MITA DEUTSCHLAND GMBH
Mollsfeld 12 40670 Meerbusch,
Germany
Phone: 02159-918120

KYOCERA MITA GMBH AUSTRIA
Eduard-Kittenberger-Gasse 95,
1230, Wien, Austria
Phone: (01) 86338-0

KYOCERA MITA SVENSKA AB
Siktgatan 2,
162 50 Vällingby, Sweden
Phone: (08) 4719999

KYOCERA MITA DANMARK A/S
Industrivej 11, DK-4632 Bjæverskov,
Denmark
Phone: 56871100

KYOCERA MITA PORTUGAL LDA.
CASCAISTOCK-Armazem nº8,
Rua das Fisgas, Alcoitão,
2765 Estoril, Portugal
Phone: (21) 4602221

KYOCERA MITA SOUTH AFRICA (PTY) LTD.
UNIT 3, "Kyalami Crescent,"
Kyalami Business Park,
1685 Midrand, South Africa
Phone: (11) 466-3290

KYOCERA MITA AMERICA, INC.
Headquarters:
225 Sand Road, P.O. Box 40008,
Fairfield, New Jersey 07004-0008,
U.S.A.
Phone: (973) 808-8444

KYOCERA MITA AUSTRALIA PTY. LTD.
Level 3, 6-10 Talavera Road, North Ryde,
N.S.W. 2113 Australia
Phone: (02) 9888-9999

KYOCERA MITA NEW ZEALAND LTD.
1-3 Parkhead Place,
Albany, Auckland,
New Zealand
Phone: (09) 415-4517

KYOCERA MITA (THAILAND) CORP., LTD.
9/209 Ratchada-Prachachem Road,
Bang Sue, Bangkok 10800, Thailand
Phone: (02) 586-0320

KYOCERA MITA SINGAPORE PTE LTD.
121 Genting Lane, 3rd Level,
Singapore 349572
Phone: (65) 7418733

KYOCERA MITA HONG KONG LIMITED
11/F., Mita Centre,
552-566, Castle Peak Road,
Tsuen Wan, New Territories,
Hong Kong
Phone: (852) 24297422

KYOCERA MITA CORPORATION
2-28, 1-chome, Tamatsukuri, Chuo-ku
Osaka 540-8585, Japan
Phone: (06) 6764-3555

© 2001 KYOCERA MITA CORPORATION

KYOCERA is a trademark of Kyocera Corporation

mita is a registered trademark of KYOCERA MITA CORPORATION

Printed in Holland