KYOCERA mita

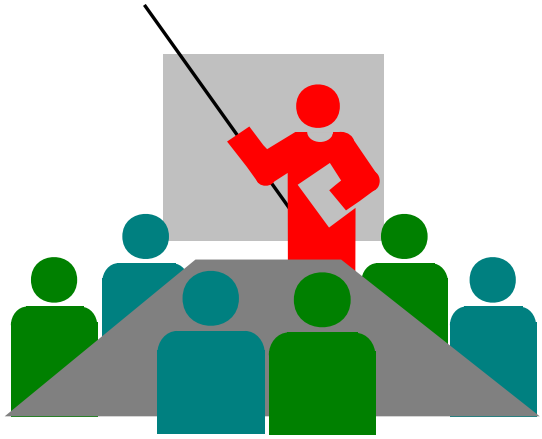

Handout

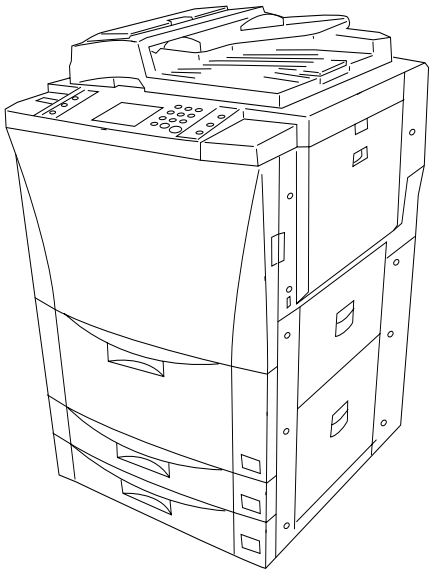

KM 6230

© KME Training dept

Specifications

KM6230-1

• Copy paper size	max. A3, min. A6R (duplex copying: min. A5R)
• Magnification ratio	manual mode: 25 - 400% DF: 25 - 200%
• Copy speed	A4: 62 ppm A4R: 44 ppm A3: 32 ppm
• First copy time	within 3.6 sec.
• Warm-up time	within 360 sec.
• Paper feed system	paper deck: 3000 sheets (A4) 2 drawers: 500 sheets (A3 ~ A5) bypass: 100 sheets (A3 ~ A6)
• Photoconductor	a-Si, 84 mm drum diameter drum potential: 450 V
• Developing system	dry, reverse developing, double roller developing bias: 350 V
• Developer	2-component, 2 x 850 gr., N32D
• Toner	N32T, 1260 gr./ctg
• Scanning system	flatbed by CCD image sensor, 600 x 600 dpi
• Light source	Inert gas, 24 W
• Transfer	Belt system
• Fixing system	halogen heaters (main: 1350 W, sub: 380 W) cleaning web
• Control temperature	195°C
• Eject method	face-up/down ejection

Specifications

KM6230-2

• Printing method	semi-conductor laser (Twin Beam)
• Resolution	600 x 600 dpi
• Gradation	bi-level, 256 gray-scales
• Bitmap memory	64 MB
• Page memory	HDD 10.2 GB
• Image capacity	15.400 pages, A4, 6%
• Power consumption	2040 W
• Options	large paper deck ST-11 (4000 sheets) finisher: F-4220, F-4330 Set attachment for F 4330 mailbox: M-2107 key counter copy tray tandem kit: TS-1 print/scan system (L) network card: NC-110

- Drive system

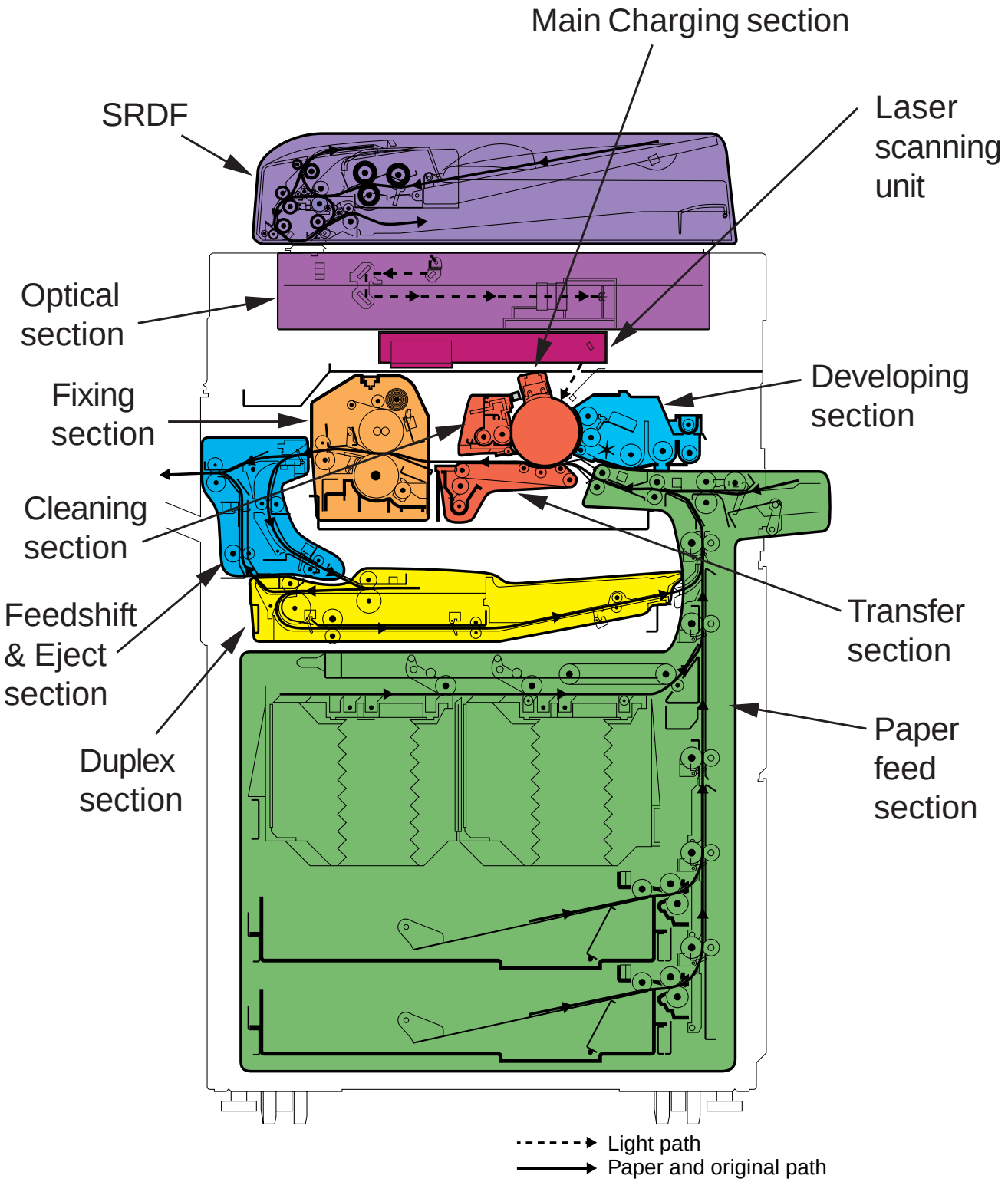

Paper feed section

- Cross view

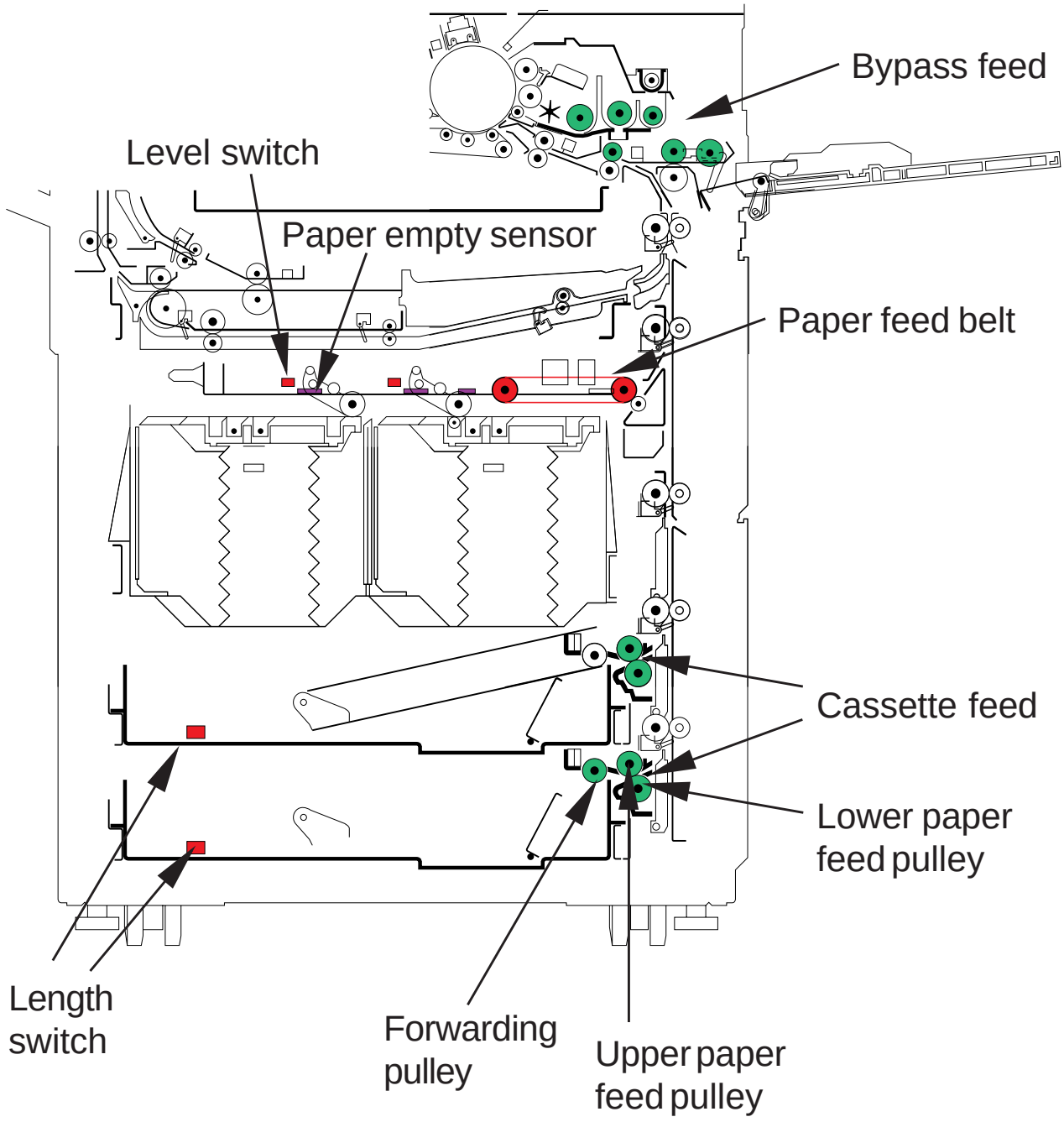

Main charging section

KM6230-20

- Cross view

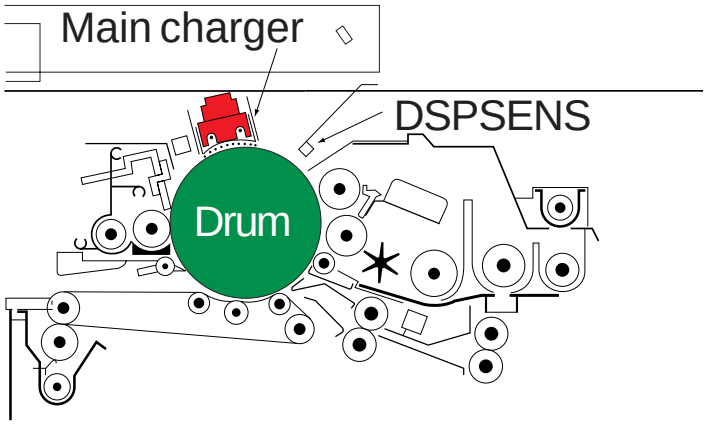

- Main charger

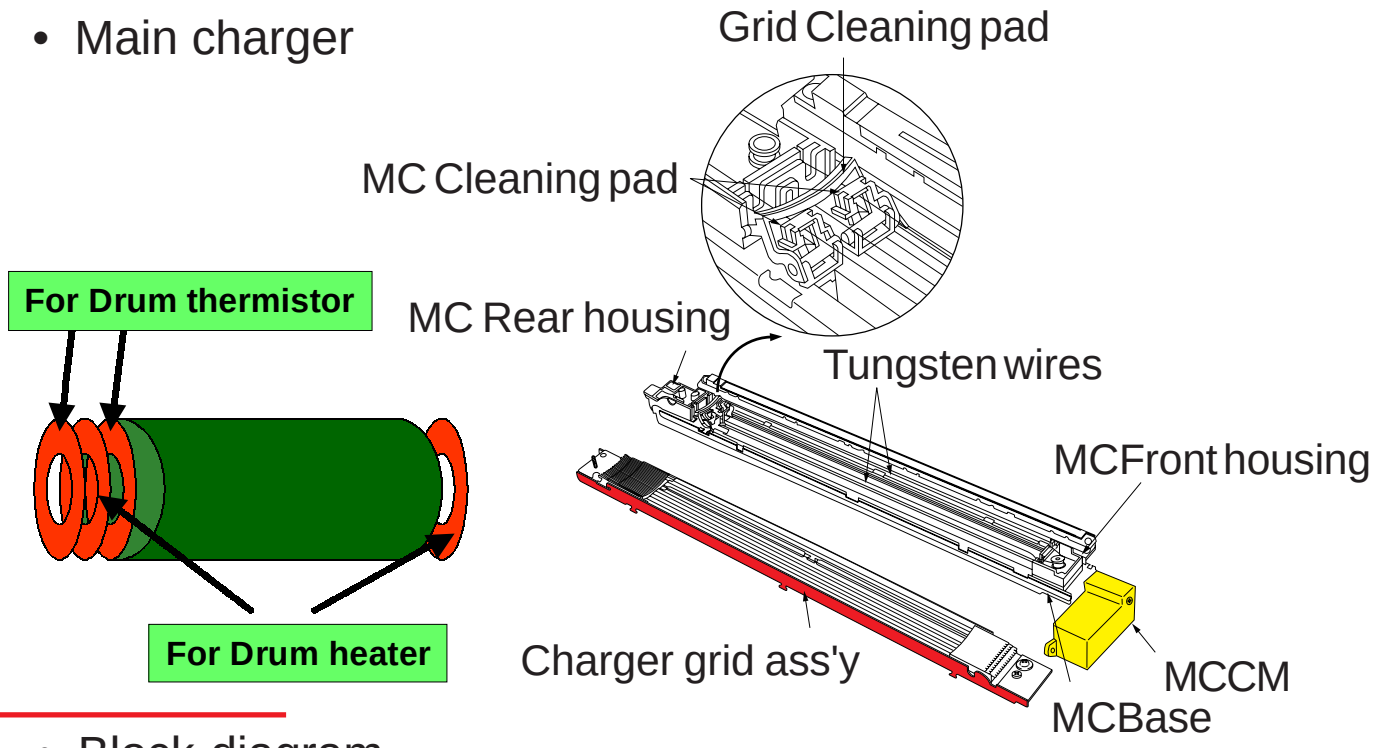

- Block diagram

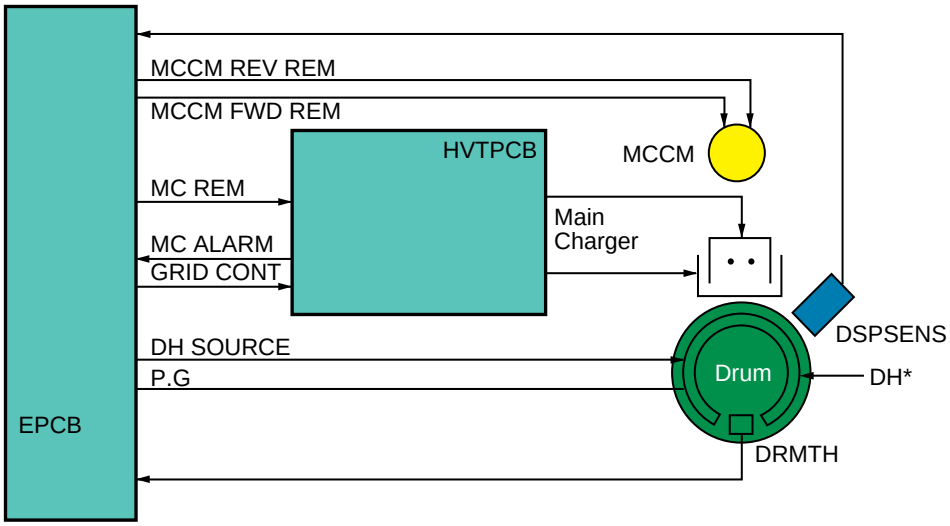

Exposure section KM6230-21

- Cross view

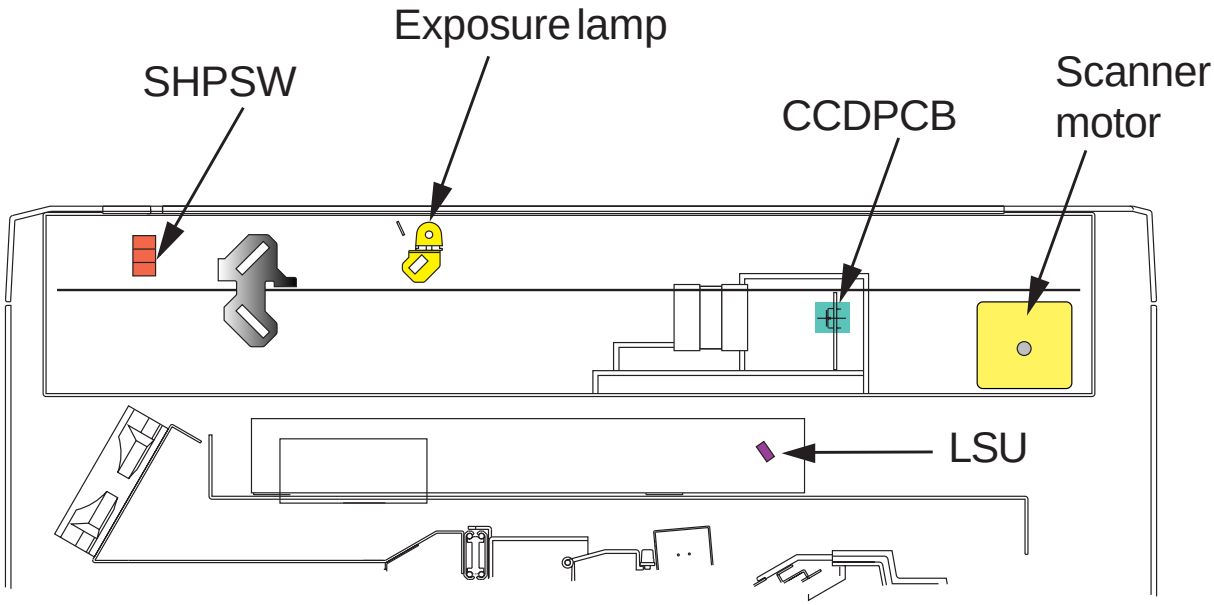

- Block diagram

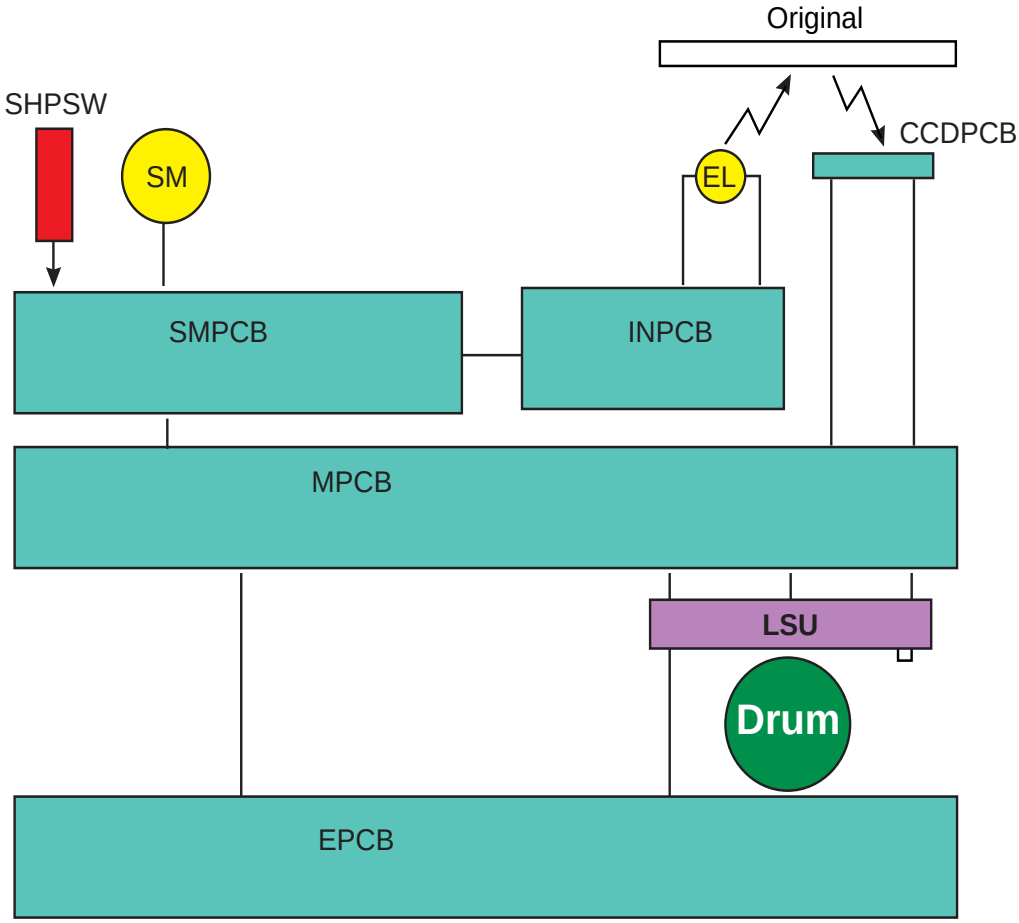

Developing section

KM6230-26

- Cross view

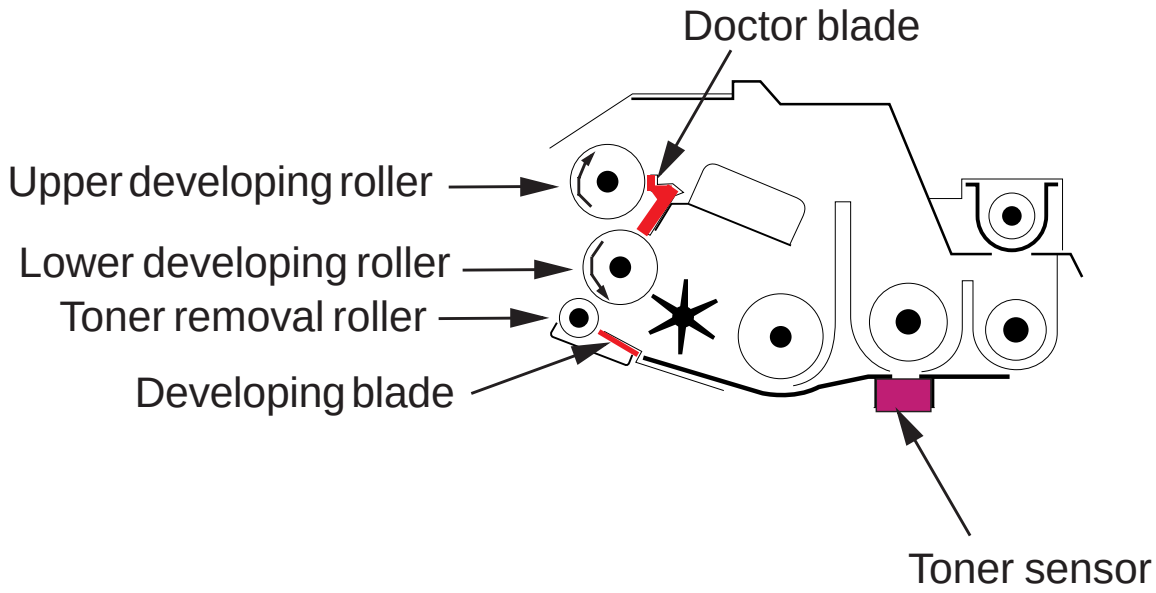

- Block diagram

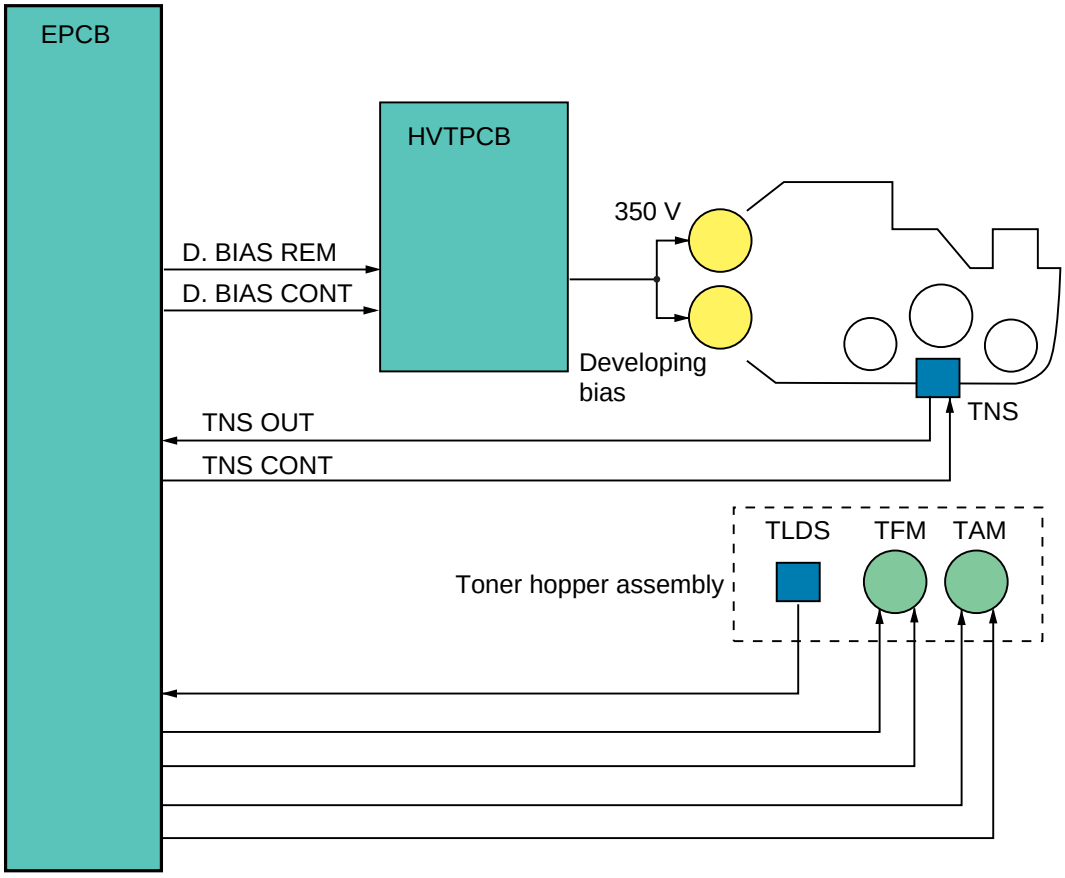

- Toner control level

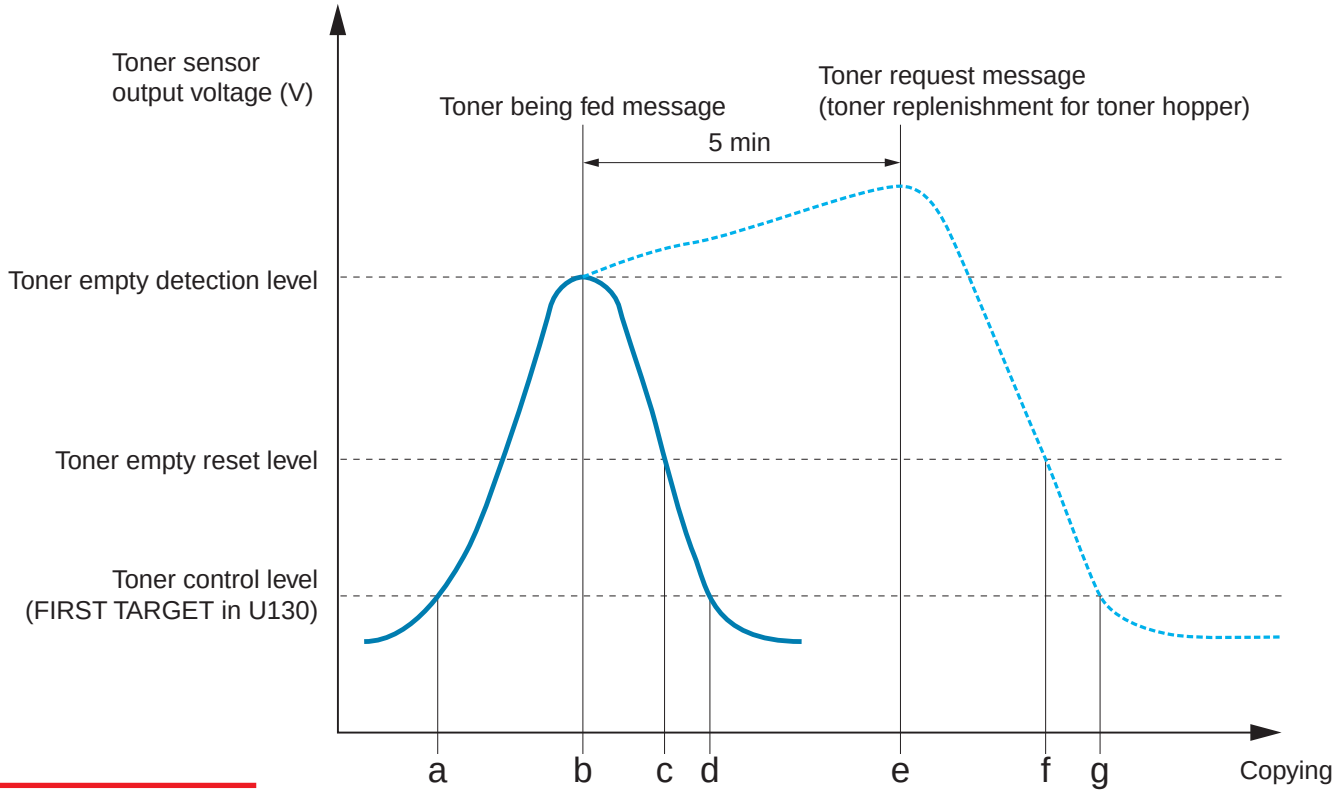

- Toner control level corrections

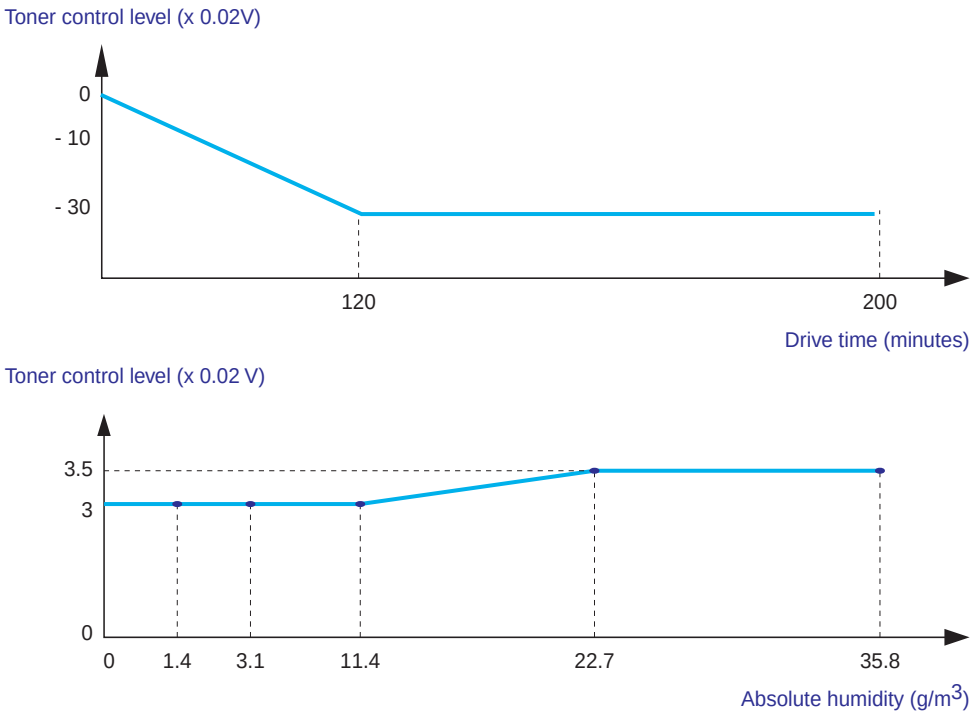

- Cross view

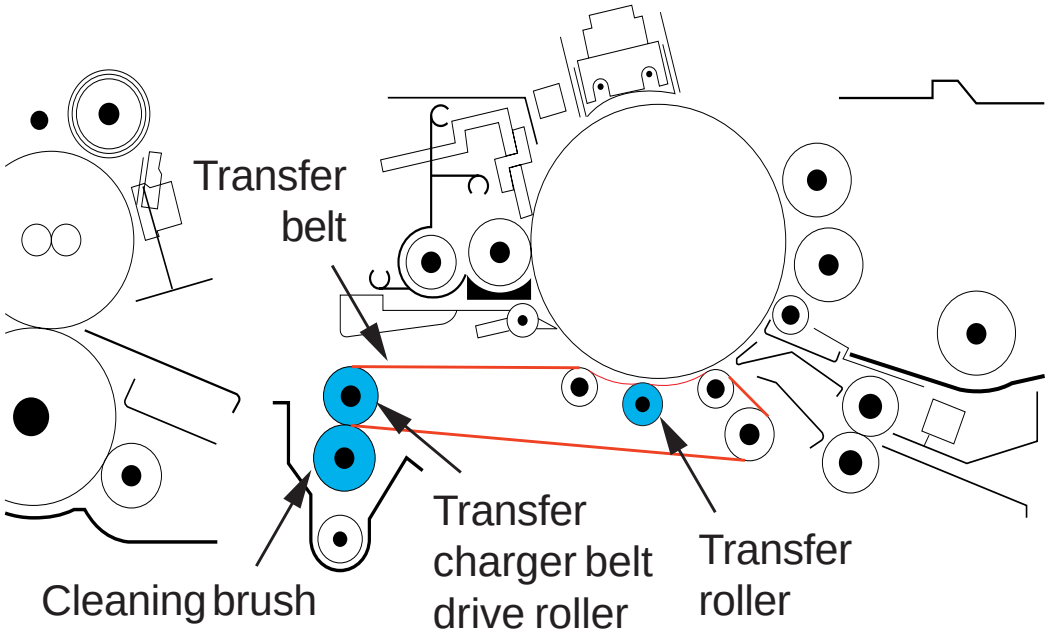

- Block diagram

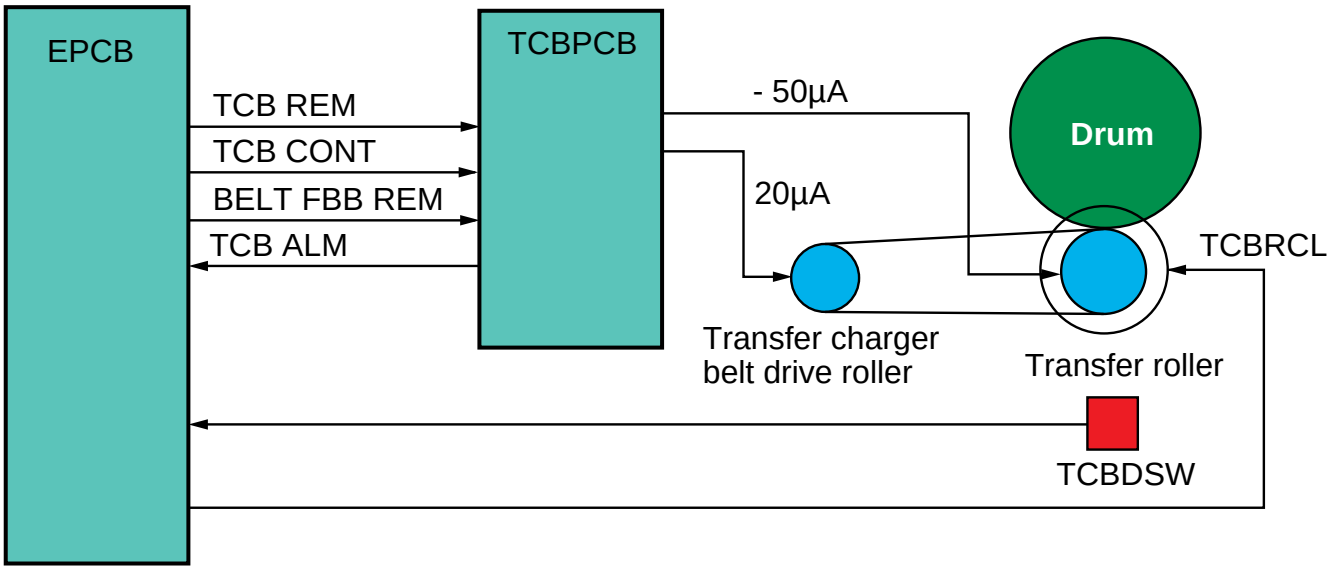

- Cross view

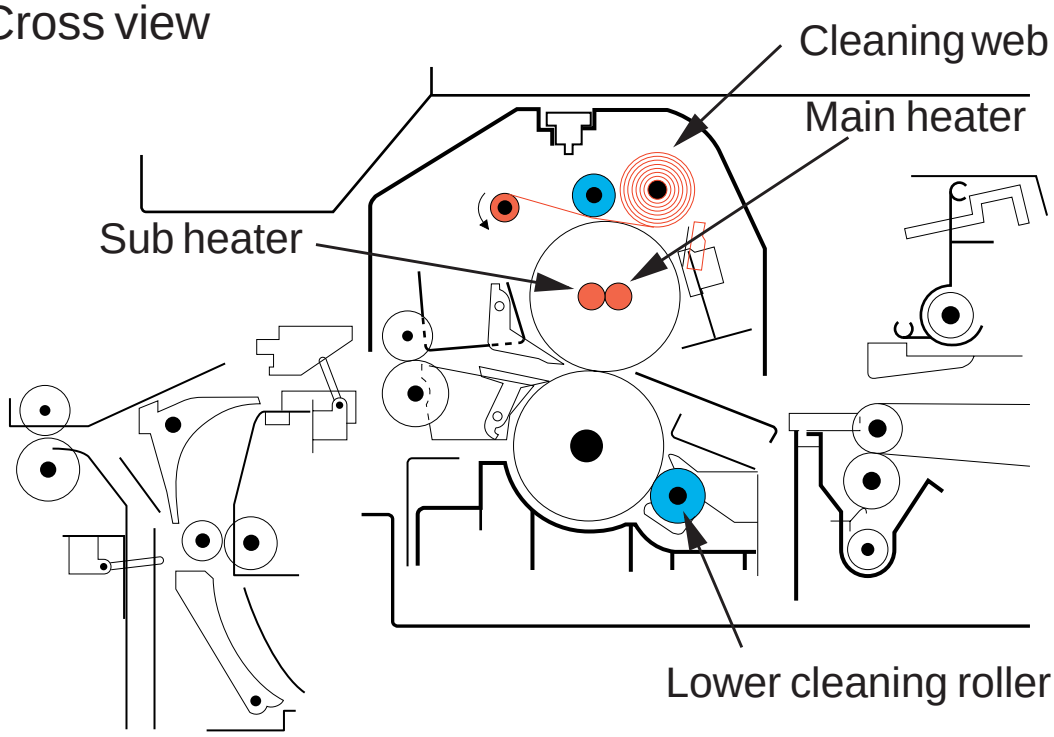

- Block diagram

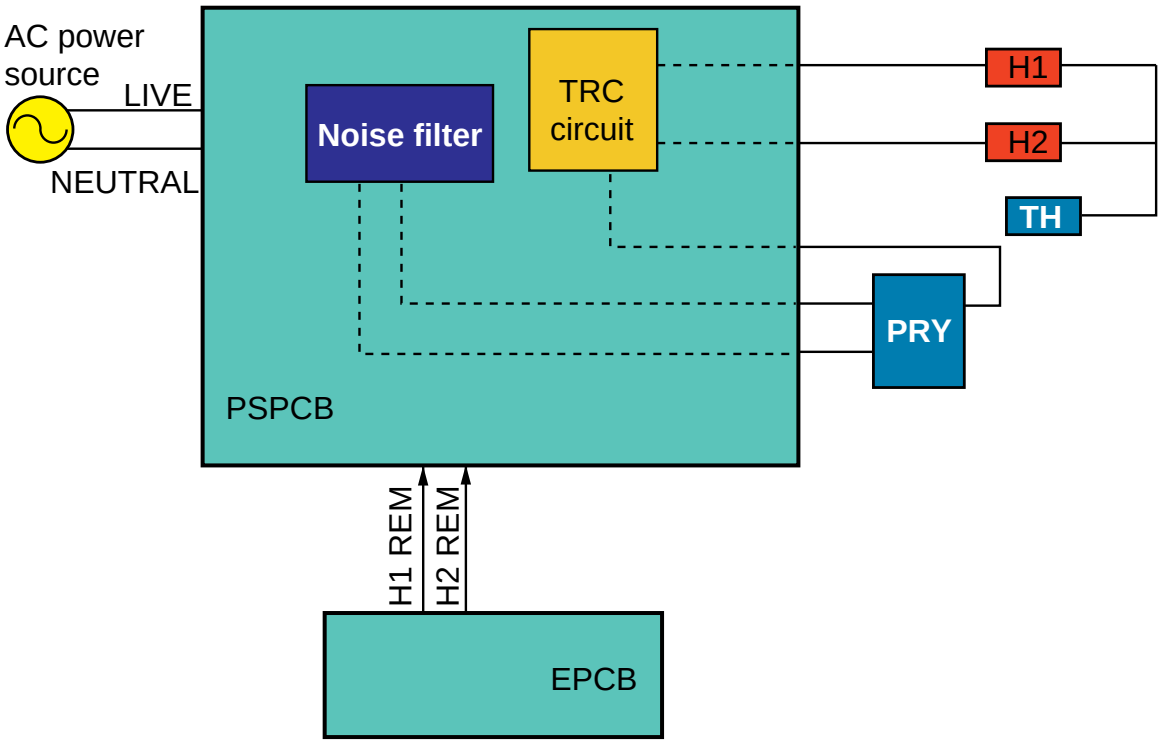

- Cross view

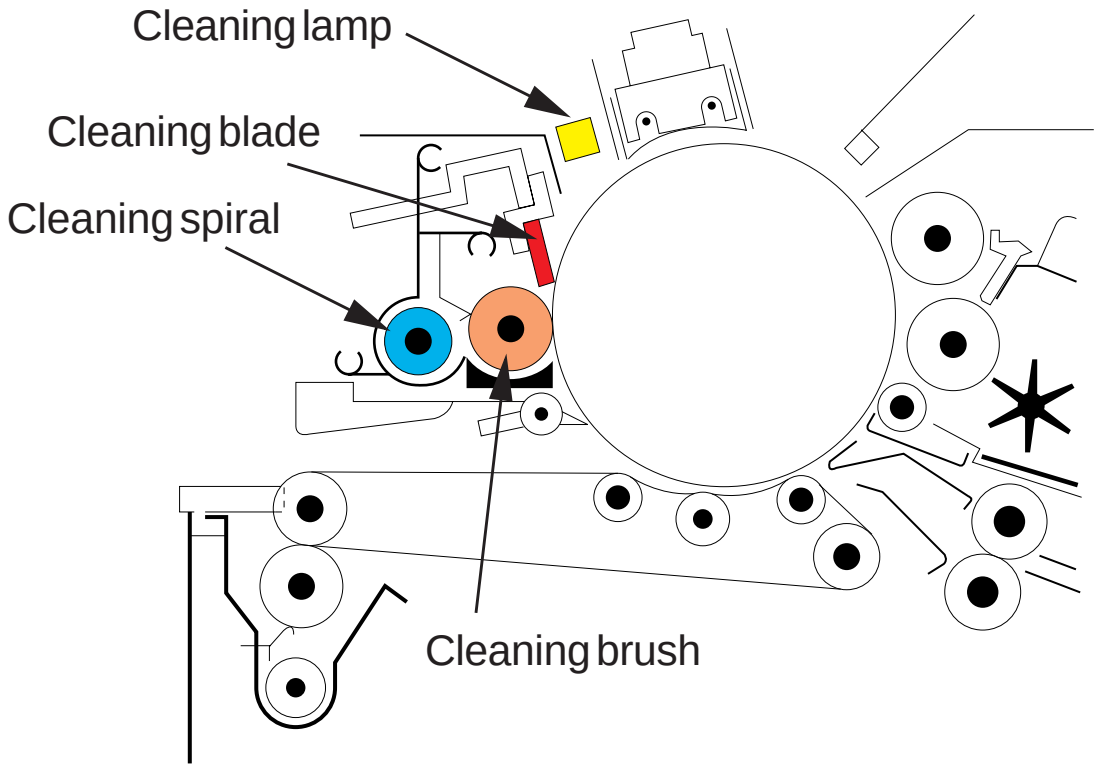

- Cleaning blade

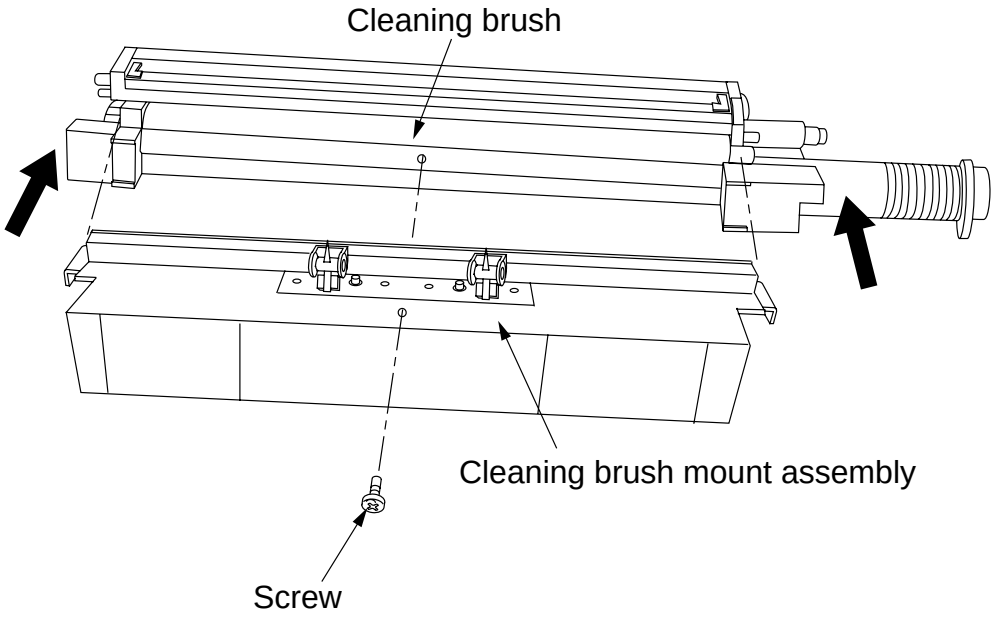

Feedshift/eject section

- Cross view

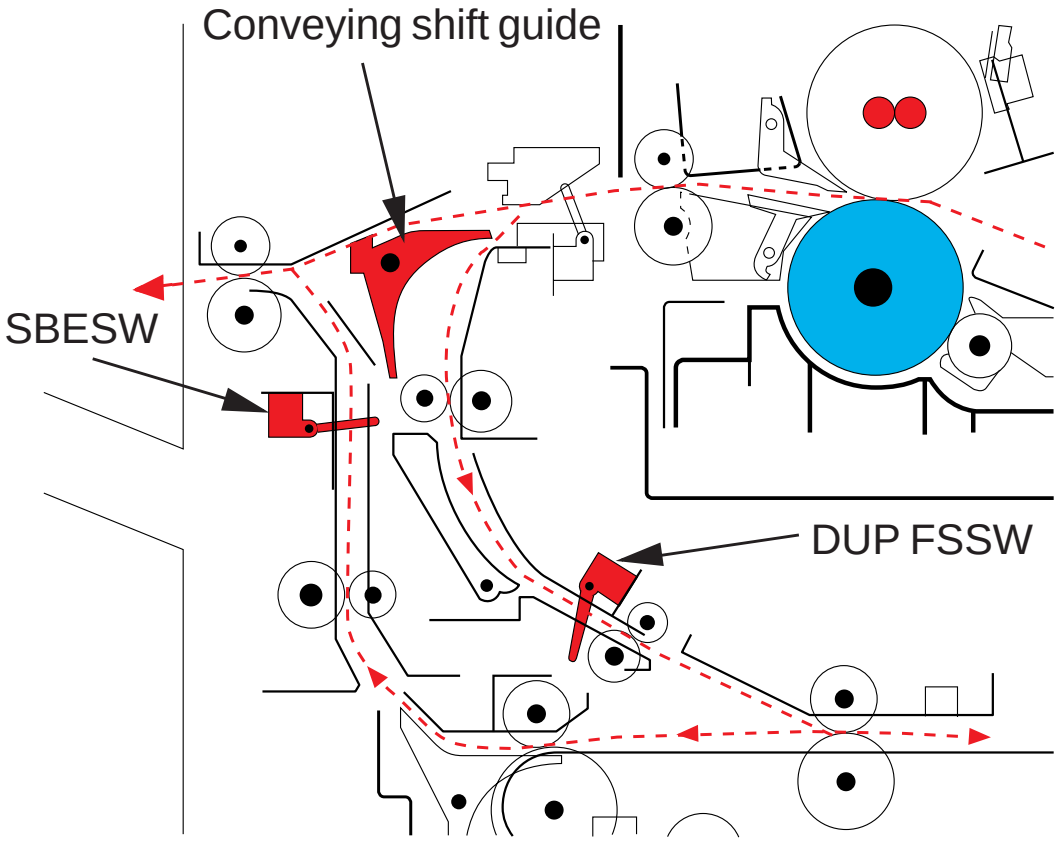

- Block diagram

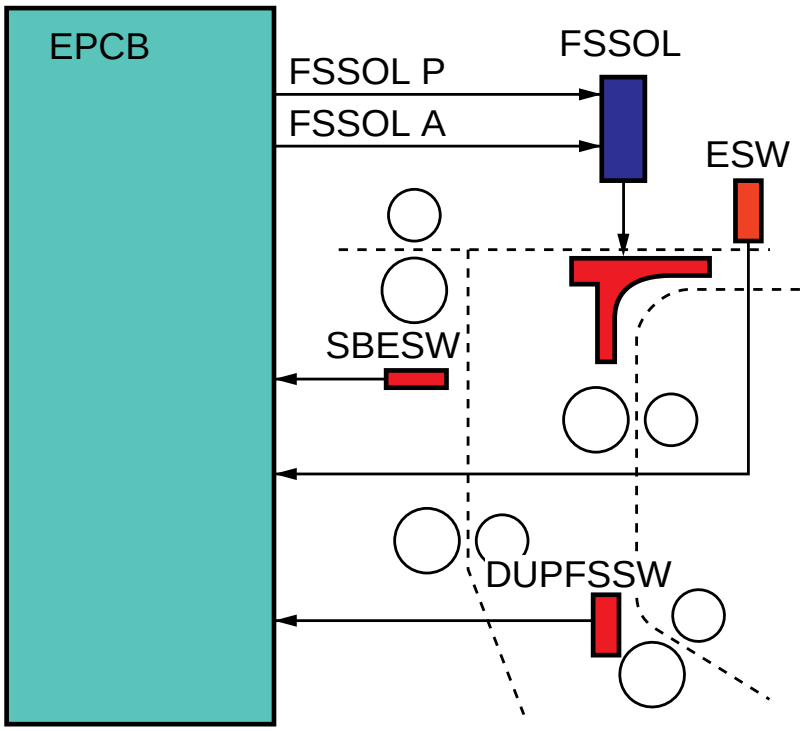

Duplex section

KM6230-32

- Cross view

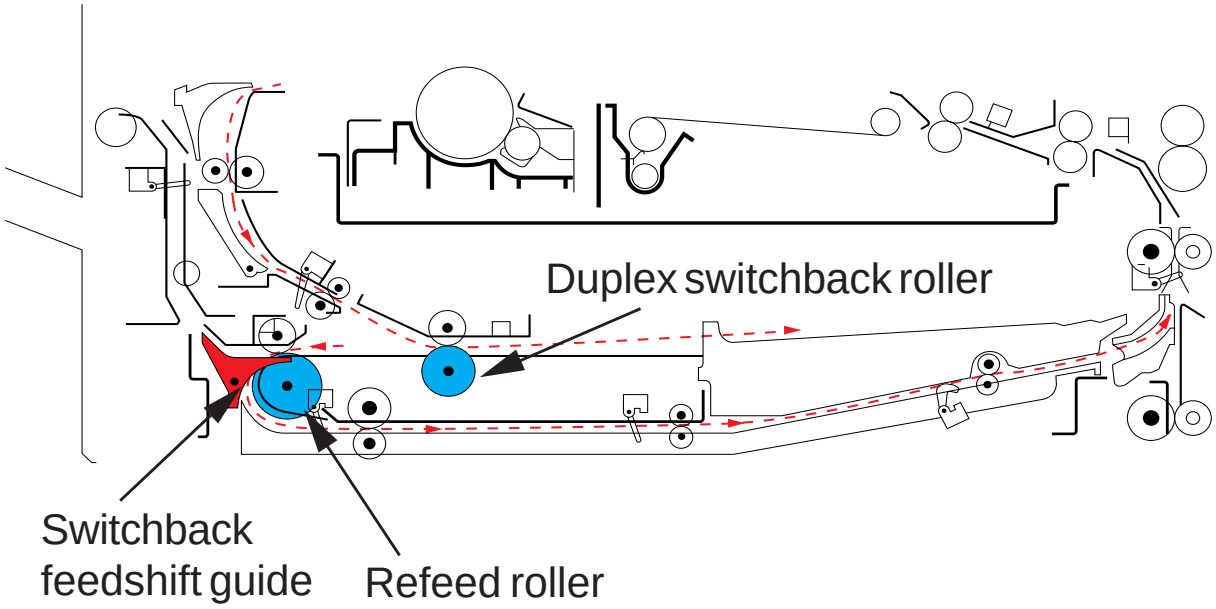

- Block diagram

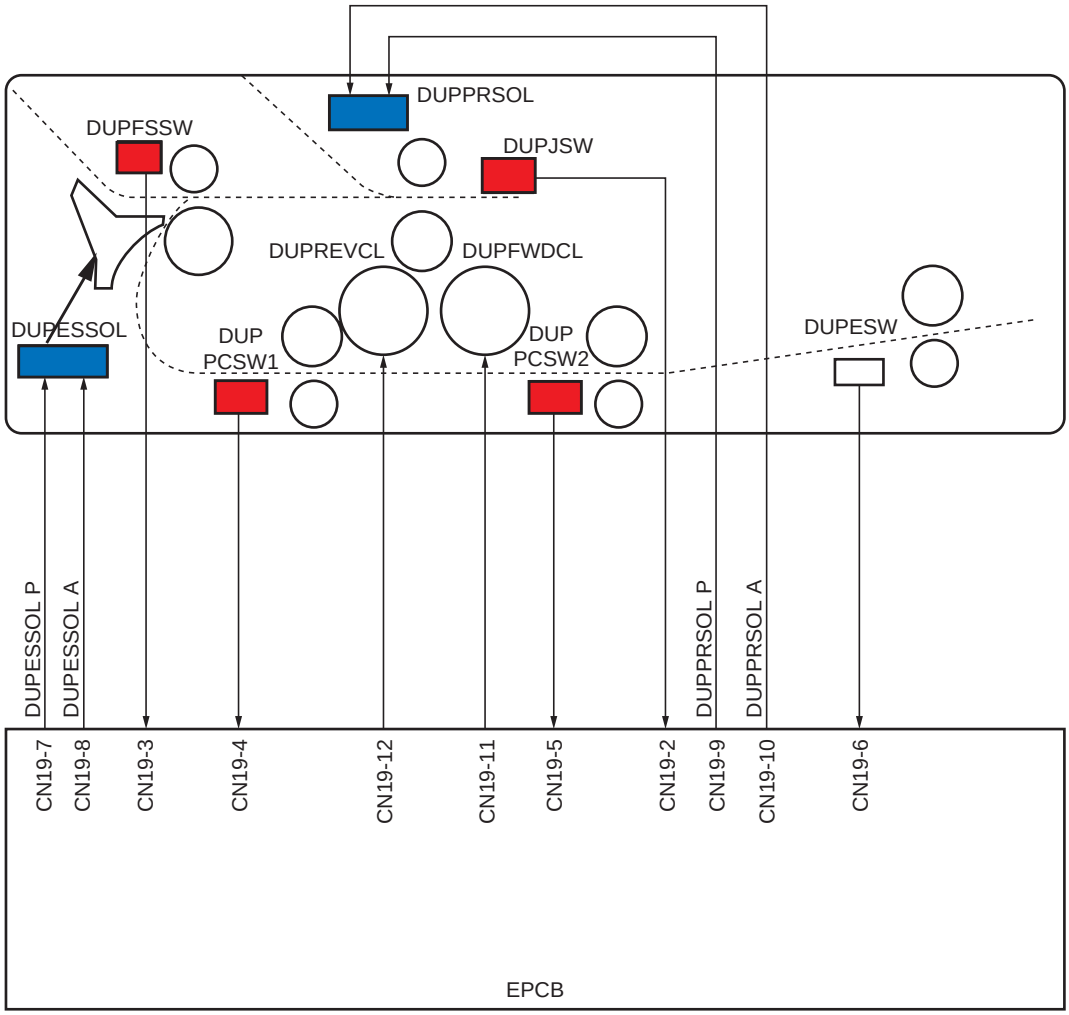

• Specifications

Original weights	Single-sided original mode: 35 - 160 gr/m^2 Double-sided original mode: 50 - 120 gr/m^2
Original paper	plain paper, thermal paper, art paper, coloured paper
Original sizes	A3 - A5R
Original capacity	Up to 70 sheets (A3, B4, folio) Up to 100 sheets (up to A4) Up to 30 sheets in the auto selection mode
Original positioning	Centre
Original placing	Face-up
Paper feeding	Top feed
Ejection	Face down
Power supply	From main body
Power source	Electrically connected to copier

- Cross view

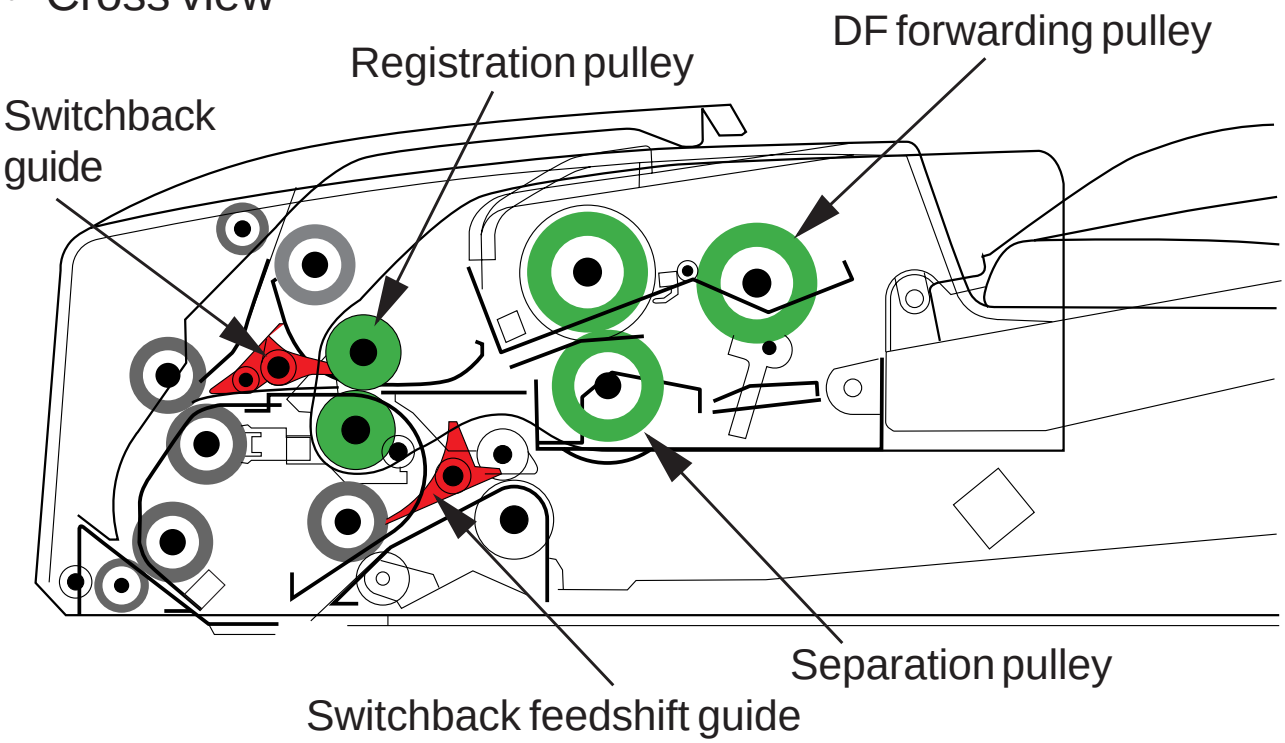

- Block diagram

