mita®

PointSource Vi 200

PARTS LIST

Published in Oct.'98
842AB120

NOTE

1. Indicate parts number and machine model when placing an order.

eg.	Parts Number	Parts Name	Machine Model	Cycle	Quantity
	2AB04080	COVER,IU(EUR)	Vi 200	50Hz	1

2. Service calls and freight will be charged separately.

3. Symbols in the "Parts Number" column.

- Parts with "•" are component parts or sub-assemblies of the assembly appearing immediately above them.

eg.	Parts Number	Parts Name	Parts Number	Parts Name
	19000045	CASSETTE ASS'Y(EXP)	•35907014	CASSETTE
			•35907020	WORK PLATE,CASSETTE

- Parts with "• •" are component parts or sub-assembly with "•" appearing immediately above them.

eg.	Parts Number	Parts Name	Parts Number	Parts Name
	•2AB00510	CHARGE ASS'Y	• •74669000	TUNGSTEN WIRE(OX) S•P (50M)

4. See the last page of this parts list for the classification of the screws in the illustrations.

Parts List

PointSource Vi 200

CONTENTS

FIG.1 EXTERIOR COVERS · · · · · 2
FIG.2 FRAMES · · · · · 4
FIG.3 CASSETTE · · · · · 6
FIG.4 PAPER FEED-IN SECTION · · · · · 8
FIG.5 PAPER CONVEYING SECTION I · · · · · 10
FIG.6 PAPER CONVEYING SECTION II · · · · · 12
FIG.7 ORIGINAL SET SECTION · · · · · 14
FIG.8 OPTICAL SECTION I · · · · · 16
FIG.9 OPTICAL SECTION II · · · · · 18
FIG.10 IU UNIT · · · · · 20
FIG.11 FIXING SECTION · · · · · 22
FIG.12 PAPER EJECT SECTION · · · · · 24
FIG.13 DRIVING SECTION · · · · · 26
FIG.14 ELECTRICAL COMPONENTS I · · · · · 28
FIG.15 ELECTRICAL COMPONENTS II · · · · · 32
FIG.16 ELECTRICAL COMPONENTS III · · · · · 34
FIG.17 MAIN WIRING · · · · · 36
FIG.18 OPTIONS & SERVICE PARTS · · · · · 38

• INDEX · · · · · 40

FIG. 1 EXTERIOR COVERS 2AB

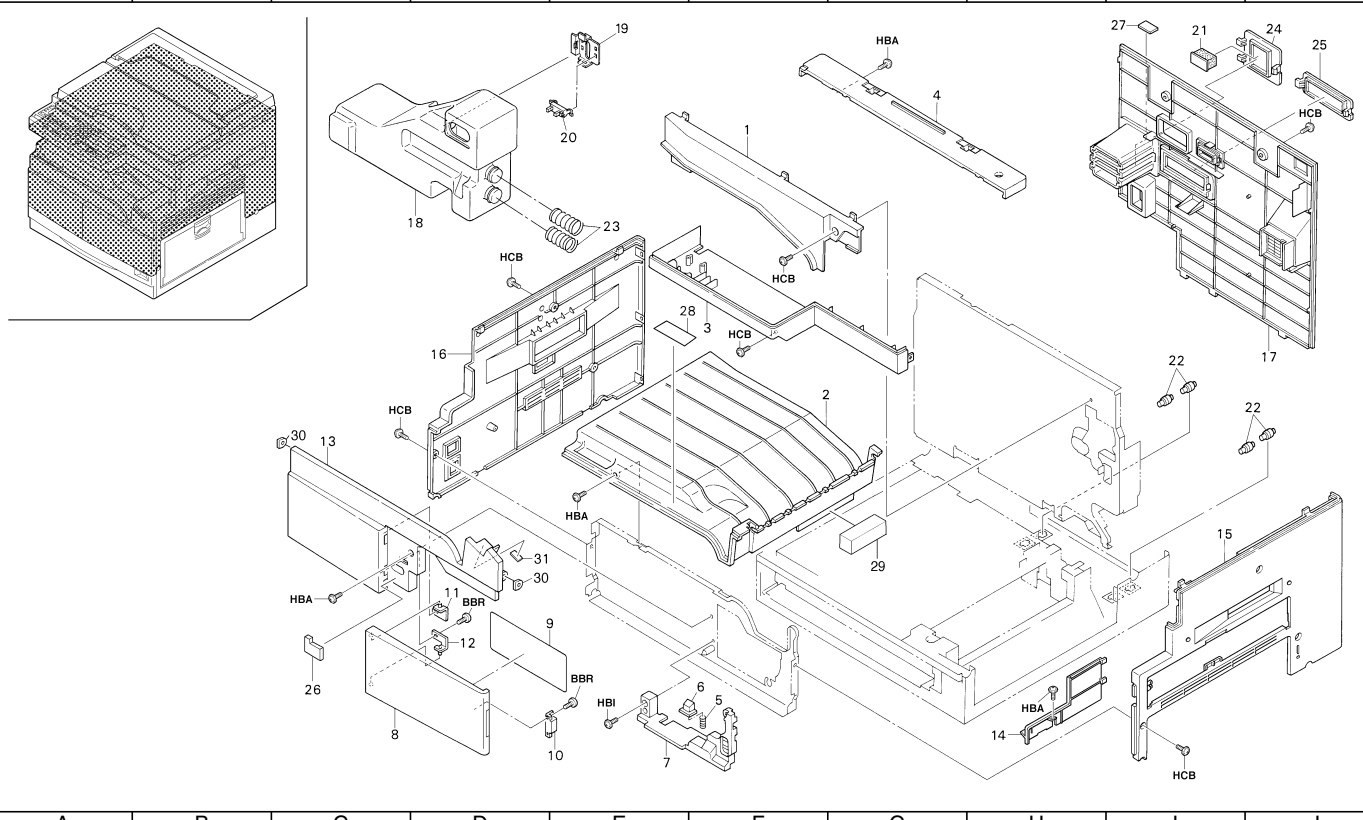

FIG. 1 EXTERIOR COVERS

Ref. No.	Part. No.	Description	Quantity	
			230V	240V
1	2AB04500	INNER REAR COVER	1	1
2	2AB04521	COVER,TRAY	1	1
3	35904080	LOWER COVER,OPERATION UNIT	1	1
4	2AB04040	UPPER REAR COVER	1	1
5	35904380	SPRING,STOPPER IU HOUSING	1	1
6	35904370	STOPPER,IU HOUSING	1	1
7	35904343	INNER COVER,MACHINE	1	1
8	2AB04080	COVER,IU(EUR)	1	1
9	35905110	LABEL,IU OPERATION	1	1
10	71804400	MAGNET CATCHER	1	1
11	35904350	FRONT HINGE A,COVER	1	1
12	35904360	FRONT HINGE B,COVER	1	1
13	35904011	FRONT COVER	1	1
14	2AB04031	RIGHT FRONT COVER	1	1
15	2AB04010	RIGHT COVER	1	1
16	35904031	LEFT COVER	1	1
17	2AB04091	REAR COVER(EUR)	1	1
18	19000051	DISPOSAL TANK ASS'Y	1	1
19	19026140	MOUNT,PI	1	1
20	74718390	OVERFLOW SENSOR	1	1
21	19002010	CUSHION,MEMORY BOARD	1	1
22	68821030	PULLEY,EJECT	4	4
23	72907570	SPRING,BASE BOOST	2	2
24	35904320	LID A,OPTION	1	1
25	35904330	LID B,OPTION	1	1
26	19004060	FRONT LID,COVER	1	1
27	19005080	LABEL,MEMORY INSERTION	1	1
28	19005110	LABEL,EJECT	1	1
29	2AB23050	SPONGE,COVER TRAY	1	1
30	35904411	FILM,PROTECTION	2	2
31	29812291	CUSHION,CONTACT GLASS	1	1

• Parts with "•" are component parts or sub-assemblies of the assembly appearing immediately above them.

• Parts with "• •" are component parts or sub-assembly with "•" appearing immediately above them.

FIG. 2 FRAMES

2AB

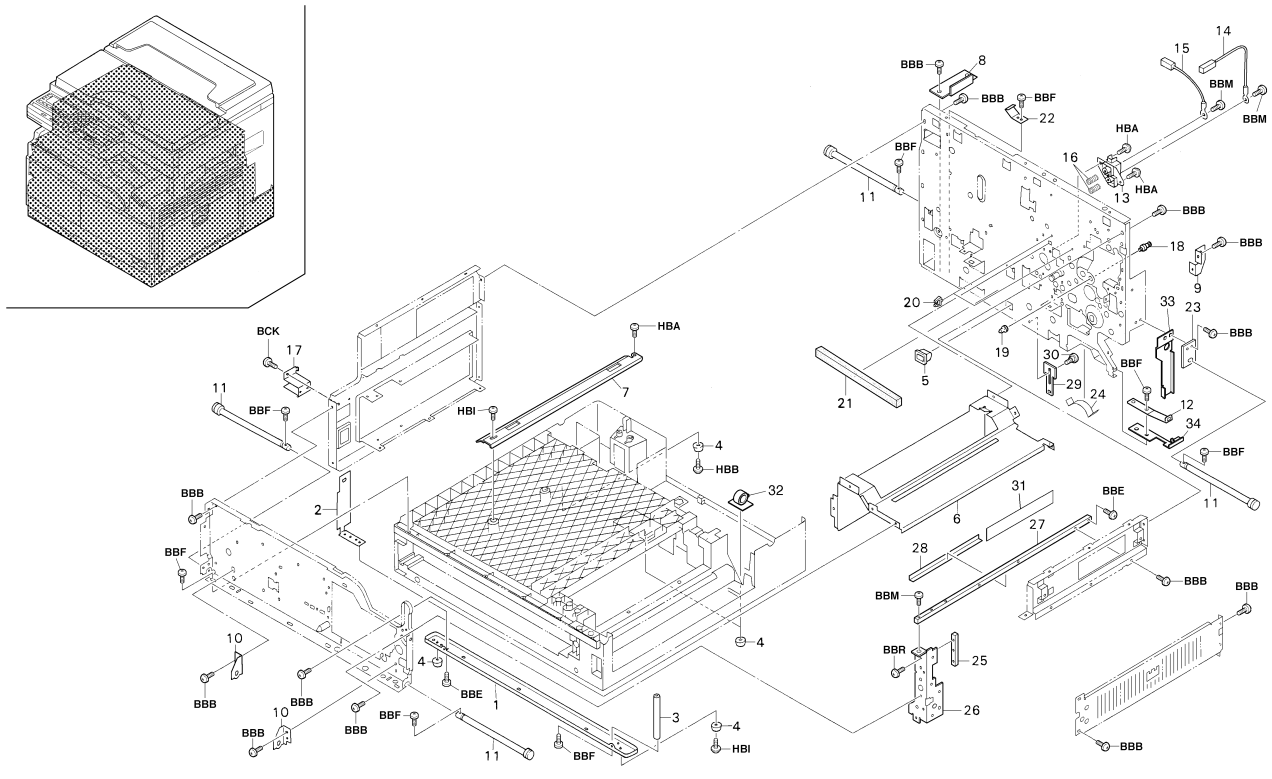

FIG. 2 FRAMES

Ref. No.	Part. No.	Description	Quantity	
			230V	240V
1	35902130	BOTTOM REINFORCEMENT,BASE	1	1
2	35902180	LEFT SUPPORT PLATE,MACHINE	1	1
3	35902190	RIGHT RETAINING PIN,MACHINE	1	1
4	65902670	CUSHION RUBBER	5	5
5	77906200	CASSETTE CATCHER	1	1
6	35902060	REINFORCEMENT,MACHINE MIDDLE	1	1
7	19026110	MOUNT BASE,POWER SOURCE	1	1
8	2AB02160	REINFORCEMENT,HANDLE	1	1
9	35902170	RIGHT REAR SUPPORT PLATE,HANDLE	1	1
10	35902160	FRONT SUPPORT PLATE,HANDLE	2	2
11	66202090	SHAFT,HANDLE	4	4
12	19026150	GROUND PLATE,LOWER CASSETTE	1	1
13	35910060	MOUNT BASE,CHARGE	1	1
14	2AB27590	WIRE,MAIN HIGH VOLTAGE	1	1
15	2AB27600	WIRE,GRID	1	1
16	63516160	SPRING,TRANSFORMER TERMINAL	2	2
17	35960041	MOUNT,TOTAL COUNTER	1	1
18	35902240	PIN,FIXING IDLE	1	1
19	2AB02150	RETAINING PIN,FIXING	1	1
20	M2105740	MINIATURE CLAMP,UAMS-05S-2	2	2
21	35906630	CUSHION,CASSETTE	1	1
22	35926140	GROUND PLATE,FEEDER	1	1
23	35902200	RIGHT REAR GUIDE,HANDLE	1	1
24	35906741	REAR FILM B,FRAME	1	1
25	2AB02050	SHAFT,REINFORCEMENT	1	1
26	2AB02040	REINFORCEMENT A,FRAME	1	1
27	2AB02060	SHAFT,SCANNER SUPPORT	1	1
28	2AB02171	SHEET,SCANNER SUPPORT	1	1
29	36002190	RETAINER,DESK	1	1
30	71802210	PIN,DRUM LIFT	1	1
31	2AB02180	LEFT SHEET,SCANNER SUPPORT	1	1
32	M2105450	CLAMP,MN-2(KITAGAWA)	1	1
33	2AB02210	REINFORCEMENT,BASE	1	1
34	2AB02220	LOWER REINFORCEMENT,BASE	1	1

• Parts with "•" are component parts or sub-assemblies of the assembly appearing immediately above them.

• Parts with "• •" are component parts or sub-assembly with "•" appearing immediately above them.

FIG. 3 CASSETTE 2AB

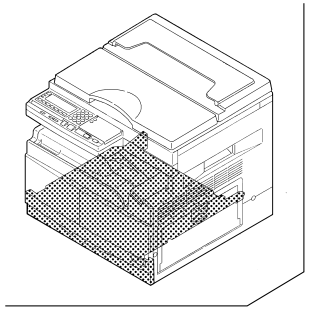

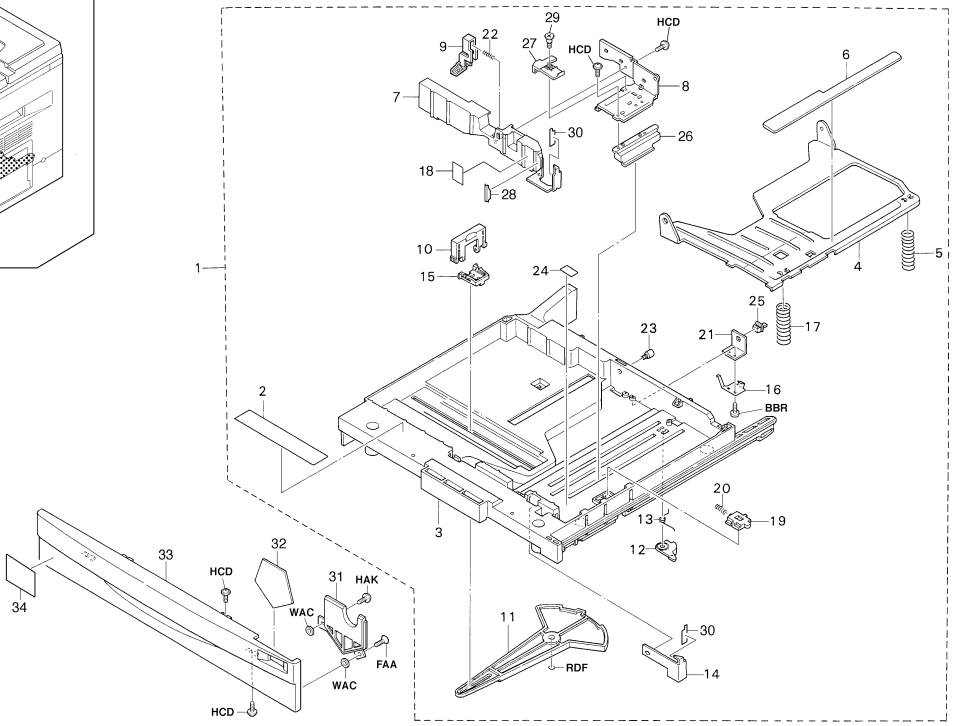

FIG. 3 CASSETTE

2AB

Ref. No.	Part. No.	Description	Quantity	
			230V	240V
1	19000045	CASSETTE ASS'Y(EXP)	1	1
2	•19005030	LABEL,CASSETTE OPERATION (EXP)	1	1
3	•35907014	CASSETTE	1	1
4	•35907020	WORK PLATE,CASSETTE	1	1
5	•19007030	REAR SPRING,CASSETTE	1	1
6	•35907040	FRICTION PLATE,CASSETTE WORK PLATE	1	1
7	•19068230	CURSOR ASS'Y(SP)	1	1
8	•19007070	REINFORCEMENT,CURSOR	1	1
9	•19007090	LEVER,CURSOR	1	1
10	•35907091	CURSOR,PAPER TRAILING EDGE	1	1
11	•35907111	TURN PLATE,SIZE DETECTION	1	1
12	•35907132	PROJECTION,SIDE REGISTRATION DETECTION	1	1
13	•35907140	SPRING,SIDE REGISTRATION DETECTION	1	1
14	•19007040	FRONT CLAW,CASSETTE	1	1
15	•35907170	MOUNT BASE,TRAILING EDGE CURSOR	1	1
16	•35907181	GROUND PLATE,CASSETTE	1	1
17	•35907222	FRONT SPRING,WORK PLATE	1	1
18	•35907230	LABEL,PAPER UPPER LIMIT	1	1
19	•65907311	HOOK,WORK PLATE	1	1
20	•35911240	SPRING,ADF SEPARATION PULLEY	1	1
21	•35907240	MOUNT,STOPPER CASSETTE	1	1
22	•66007120	SPRING,CURSOR C	1	1
23	•65907570	PIN,PULLEY CASSETTE	1	1
24	•65907610	SEAL,PAPER EMPTY	1	1
25	•77906210	CASSETTE STOPPER	1	1
26	•19007080	MOUNT BASE,CURSOR	1	1
27	•19007100	RATCHET,CURSOR	1	1
28	•19007120	PROTECTING PLATE,CURSOR	1	1
29	•60116080	PIN RAIL DEV.	1	1
30	•19007130	FILM,CASSETTE CLAW	2	2
31	35907190	MOUNT,SIZE INDICATION	1	1
32	35907200	SIZE INDICATION PLATE,CASSETTE	1	1
33	35904231	COVER,CASSETTE	1	1
34	19005130	LABEL,CASSETTE CAUTION	1	1

• Parts with "•" are component parts or sub-assemblies of the assembly appearing immediately above them.

• Parts with "• •" are component parts or sub-assembly with "•" appearing immediately above them.

FIG. 4 PAPER FEED-IN SECTION

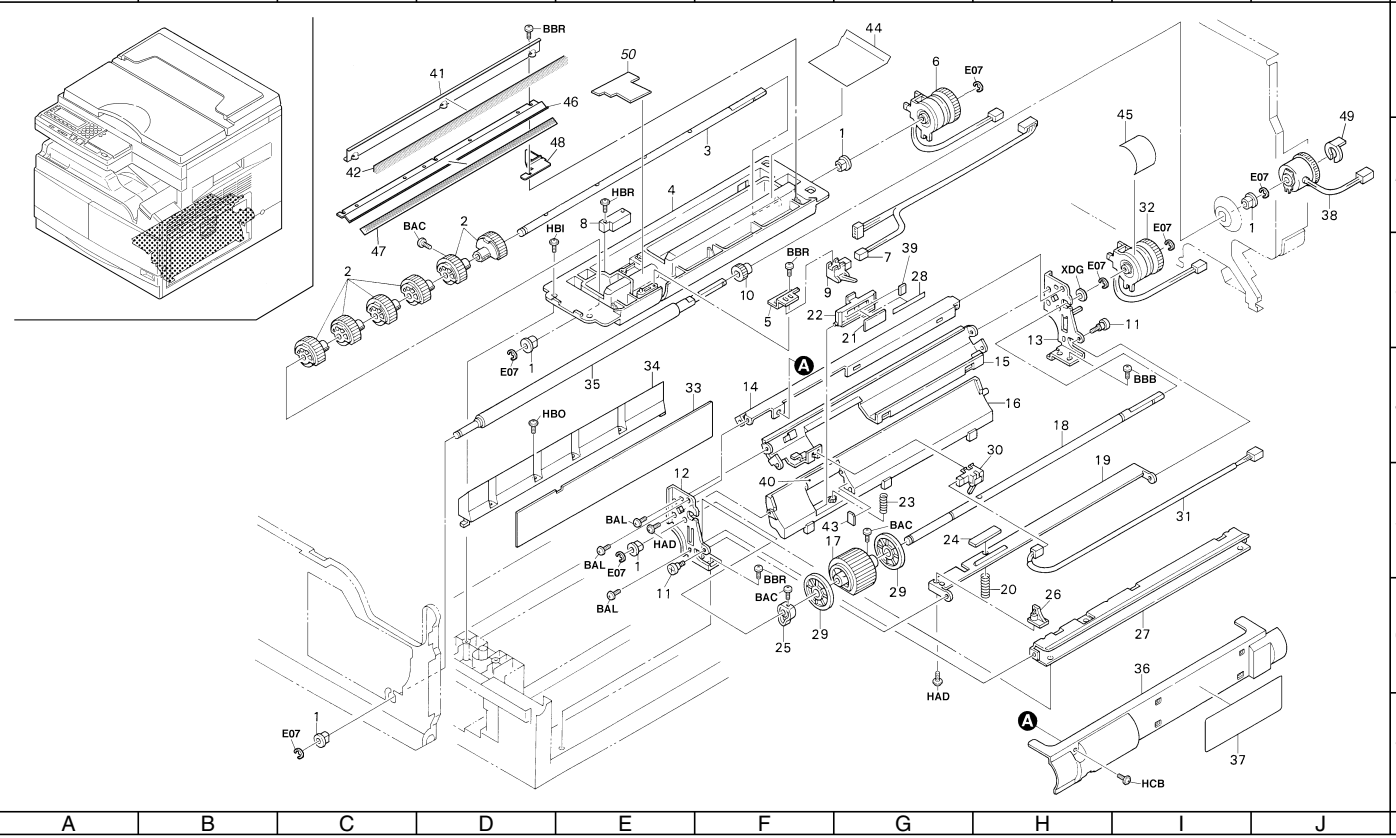

FIG. 4 PAPER FEED-IN SECTION

2AB-1

Ref. No.	Part. No.	Description	Quantity 230V	Quantity 240V
1	49028101	BUSH 8	5	5
2	35906032	PULLEY,PAPER FEED	6	6
3	19006010	SHAFT,PAPER FEED(METRIC)	1	1
4	35906052	HOUSING,PAPER FEED	1	1
5	35906070	MOUNT,REGISTRATION SW	1	1
6	19006030	CLUTCH,PAPER FEED	1	1
7	35927150	JUNCTION WIRING,PAPER FEED UNIT	1	1
8	65027360	SWITCH,EMPTY	1	1
9	68727030	SWITCH,DUPLEX CONVEYING	1	1
10	35906090	GEAR 15,REGISTRATION	1	1
11	48128107	PIN,CLEANING BLADE	2	2
12	35906300	FRONT FRAME,BYPASS	1	1
13	35906310	REAR FRAME,BYPASS	1	1
14	35906320	UPPER STAY,BYPASS	1	1
15	35906340	UPPER GUIDE,BYPASS	1	1
16	35906350	LOWER GUIDE,BYPASS	1	1
17	35906362	PULLEY,BYPASS	1	1
18	35906370	SHAFT,BYPASS	1	1
19	35906380	GUIDE,BYPASS LIFT	1	1
20	35906430	SPRING,BYPASS LIFT	1	1
21	35906441	PAD,BYPASS	1	1
22	35906451	HOUSING,BYPASS PAD	1	1
23	35906460	SPRING,BYPASS PAD	1	1
24	35906470	FRICTION PLATE,BYPASS LIFT	1	1
25	35906490	CAM,BYPASS LIFT	1	1
26	35906501	STOPPER,BYPASS LIFT	1	1
27	35906520	LOWER STAY,BYPASS	1	1
28	35906562	FILM,PAD PAPER FEED	1	1
29	35906581	COLLAR,BYPASS PAPER FEED	2	2
30	35927190	SWITCH,BYPASS PE	1	1
31	35927470	WIRE,BYPASS PE JUNCTION	1	1
32	*2AB93110*	*PARTS,CLUTCH BYPASS(SP)*	*1*	*1*
33	35906100	GUIDE FILM,CONFLUENCE	1	1
34	35906060	LOWER GUIDE,PAPER FEED	1	1
35	2AB06010	LEFT ROLLER,REGISTRATION	1	1
36	35906480	COVER,BYPASS	1	1
37	35905090	LABEL,JAM REMOVEMENT	1	1
38	35993150	PARTS CLUTCH REGISTRATION(SP)	1	1
39	35906620	SPACER,PAD	2	2
40	35906640	FILM,GUIDE BYPASS	1	1
41	2AB06020	MOUNT,PAPER DUST CLEANING FELT	1	1
42	2AB06080	LEFT FELT,RESISTANCE	1	1
43	35906650	VIBRATION INSULATOR,HOUSING PAD	1	1
44	35906710	FILM,PAPER FEED HOUSING	1	1
45	35906720	FILM,BYPASS CLUTCH	1	1
46	2AB06030	LOWER MOUNT,PAPER DUST CLEANING FELT	1	1
47	2AB06050	LOWER LEFT FELT,RESISTANCE	1	1
48	2AB06060	GROUND PLATE,PAPER DUST CLEANING	1	1
49	34806140	STOPPER 4	1	1
50	*2AB26230*	*COVER,RESISTANCE SWITCH*	*1*	*1*

• Parts with "•" are component parts or sub-assemblies of the assembly appearing immediately above them.

• Parts with "• •" are component parts or sub-assembly with "•" appearing immediately above them.

FIG. 5 PAPER CONVEYING SECTION I

2AB

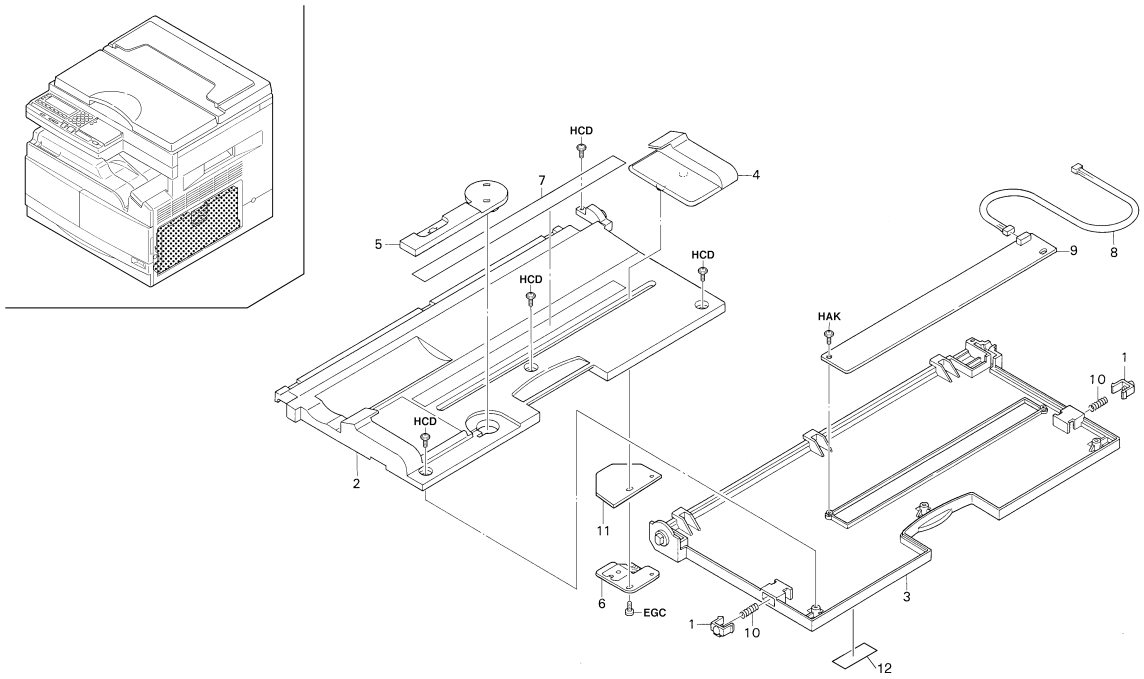

FIG. 5 PAPER CONVEYING SECTION I

Ref. No.	Part. No.	Description	Quantity	
			230V	240V
1	33906880	STOPPER,BYPASS TABLE	2	2
2	35906210	UPPER TABLE,BYPASS	1	1
3	35906220	LOWER TABLE,BYPASS	1	1
4	35906230	CURSOR,BYPASS	1	1
5	35906240	AUXILIARY PLATE,BYPASS TABLE	1	1
6	35906260	JUNCTION PLATE,SIZE DETECTION	1	1
7	35906290	SIZE INDICATION PLATE,BYPASS (METRIC)	1	1
8	2AB27661	WIRE,BYPASS TRAY	1	1
9	35993371	PARTS SIZE DETECTION PCB(SP)	1	1
10	63516110	SPRING,TRANSFER	2	2
11	35906700	FILM,BYPASS TRAY	1	1
12	19005120	LABEL,BYPASS OPERATION	1	1

• Parts with "•" are component parts or sub-assemblies of the assembly appearing immediately above them.

• Parts with "• •" are component parts or sub-assembly with "•" appearing immediately above them.

FIG. 6 PAPER CONVEYING SECTION II 2AB

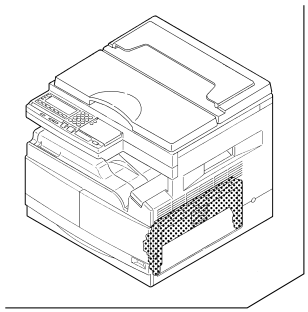

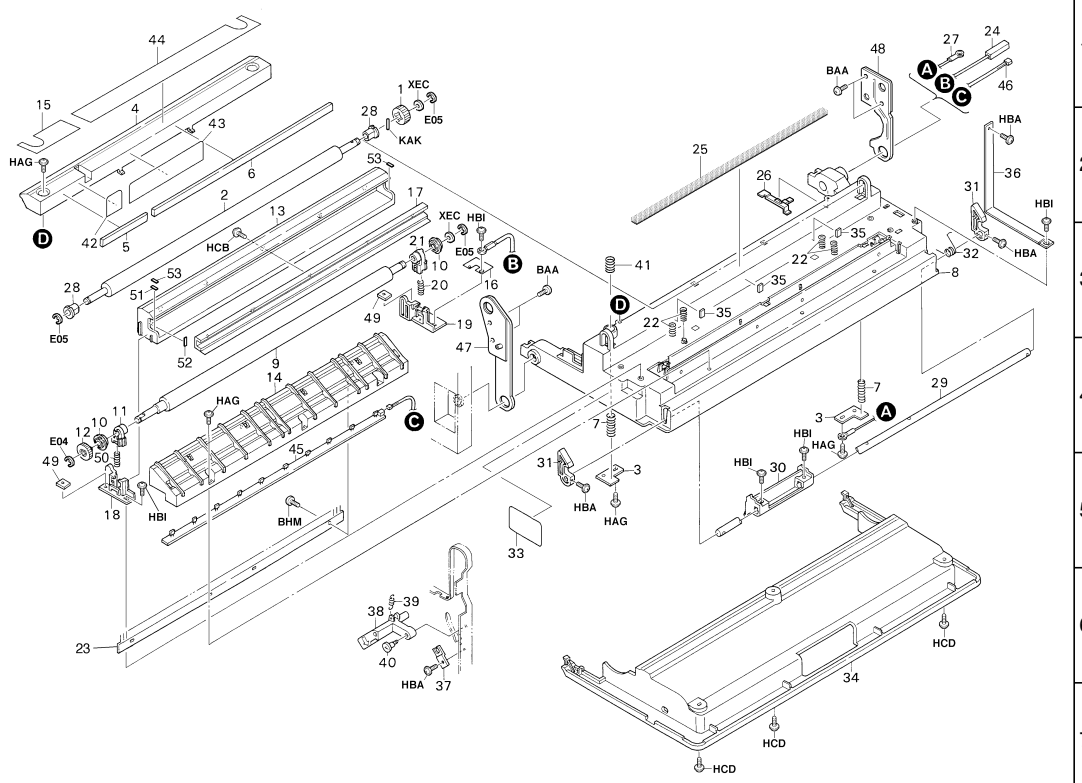

FIG. 6 PAPER CONVEYING SECTION II

Ref. No.	Part. No.	Description	Quantity 230V	Quantity 240V
1	45729206	GEAR,TONER FEED ROLLER	1	1
2	19006040	RIGHT ROLLER,REGISTRATION	1	1
3	35906130	HOLDER,SPRING REGISTRATION	2	2
4	35906532	FRONT GUIDE,REGISTRATION	1	1
5	35906540	SEAL A,PAPER DUST CLEANING	1	1
6	35906550	SEAL B,PAPER DUST CLEANING	1	1
7	35906590	SPRING,REGISTRATION	2	2
8	35916014	HOUSING,CONVEYING	1	1
9	35916020	ROLLER,TRANSFER	1	1
10	35916030	PULLEY,TRANSFER	2	2
11	35916041	FRONT BUSHING,TRANSFER	1	1
12	35916050	GEAR,TRANSFER	1	1
13	35916063	FRONT GUIDE,TRANSFER	1	1
14	2AB16061	REAR GUIDE,TRANSFER	1	1
15	35906660	FRONT FILM,REGISTRATION GUIDE	1	1
16	35916100	TERMINAL,TRANSFER	1	1
17	19016010	CLEANER,TRANSFER	1	1
18	35916141	FRONT MOUNT BASE,BUSHING TRANSFER	1	1
19	35916150	REAR MOUNT BASE,BUSHING TRANSFER	1	1
20	35916160	SPRING,TRANSFER	1	1
21	35916171	REAR BUSHING,TRANSFER	1	1
22	35916180	FRONT SPRING,CONVEYING GUIDE	4	4
23	2AB16111	STATIC ELIMINATOR,TRANSFER	1	1
24	2AB27580	WIRE,TRANSFER HIGH VOLTAGE	1	1
25	2AB06070	RIGHT FELT,RESISTANCE	1	1
26	2AB16140	SPACER,CONVEYING FULCRUM	1	1
27	35927590	WIRE,REGISTRATION GROUND	1	1
28	60606101	BUSHING FEED BACK ROLLER	2	2
29	35904130	SHAFT,CONVEYING HANDLE	1	1
30	35904120	HANDLE,CONVEYING UNIT	1	1
31	35904270	HOOK,CONVEYING HANDLE	2	2
32	35904390	REAR SPRING,CONVEYING RELEASE	1	1
33	2AG05200	LABEL,HIGH VOLTAGE CAUTION(EXP)	1	1
34	35904070	COVER,CONVEYING UNIT	1	1
35	2AB16130	FRONT SLIDER,TRANSFER	3	3
36	35904240	AUXILIARY PLATE,CONVEYING UNIT	1	1
37	35904280	POSITIONING PLATE,CONVEYING LEVER	1	1
38	35904290	LEVER,CONVEYING RELEASE	1	1
39	35904300	SPRING,LEVER CONVEYING	1	1
40	73912281	PIN,ORIGINAL HOLDER	1	1
41	35916200	SPRING,RELEASE AUXILIARY	1	1
42	35906600	FRONT FILM,PAPER FEED HOUSING	1	1
43	35906610	REAR FILM,PAPER FEED HOUSING	1	1
44	35906670	REAR FILM,REGISTRATION GUIDE	1	1
45	2AB16100	LAMP,CLEANING LAMP	1	1
46	35927540	WIRE,CLEANING LAMP JUNCTION	1	1
47	2AB02191	FRONT FULCRUM PLATE,CONVEYING	1	1
48	*2AB02201*	*REAR FULCRUM PLATE,CONVEYING*	*1*	*1*
49	2AB16120	FRONT SPACER,TRANSFER	2	2
50	2AB16150	FRONT SPRING,TRANSFER	1	1
51	2AB16080	SPACER A,TRANSFER GUIDE	1	1
52	2AB16090	SPACER B,TRANSFER GUIDE	1	1
53	2AB16160	SPACER C,TRANSFER GUIDE	2	2

• Parts with "•" are component parts or sub-assemblies of the assembly appearing immediately above them.

• Parts with "• •" are component parts or sub-assembly with "•" appearing immediately above them.

FIG. 7 ORIGINAL SET SECTION 2AB

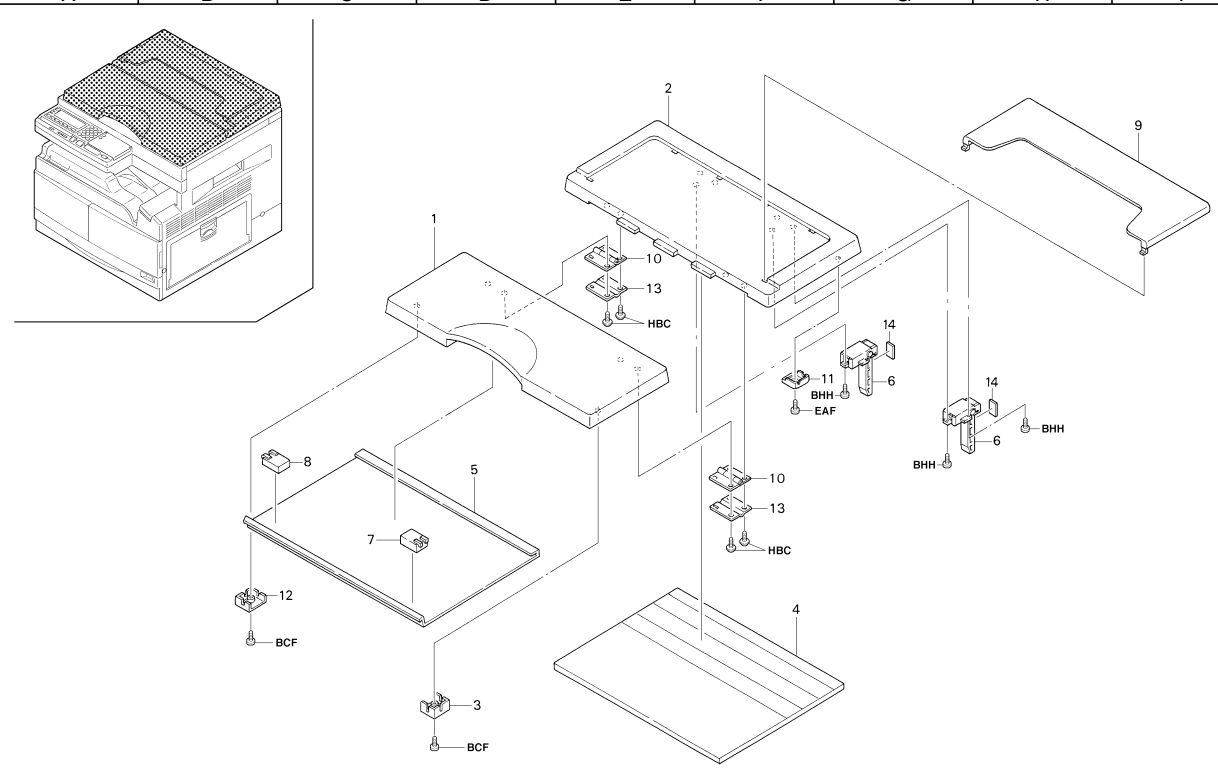

FIG. 7 ORIGINAL SET SECTION

Ref. No.	Part. No.	Description	Quantity	
			230V	240V
	2AB00110	ORIGINAL HOLDER ASS'Y	1	1
1	•19012010	COVER A,PLATEN	1	1
2	•2AB12510	COVER B,PLATEN	1	1
3	•19012030	RIGHT BASE,MAT	1	1
4	•19012041	MAT,ORIGINAL HOLDER	1	1
5	•19012050	SHEET,ORIGINAL HOLDER	1	1
6	•19012060	HINGE,ORIGINAL HOLDER	2	2
7	•19012090	RIGHT MOVING PLATE,MAT	1	1
8	•19012100	LEFT MOVING PLATE,MAT	1	1
9	•60904280	ORIGINAL POCKET	1	1
10	•60904310	HINGE,ORIGINAL HOLDER	2	2
11	•66012180	ACTUTATION PLATE,ORIGINAL DETECTION SWITCH	1	1
12	•69312100	BASE,MAT	1	1
13	•69312110	PLATE SPRING,ORIGINAL HOLDER	2	2
14	•79904140	ORIGINAL HOLDER SPACER	2	2

• Parts with "•" are component parts or sub-assemblies of the assembly appearing immediately above them.

• Parts with "• •" are component parts or sub-assembly with "•" appearing immediately above them.

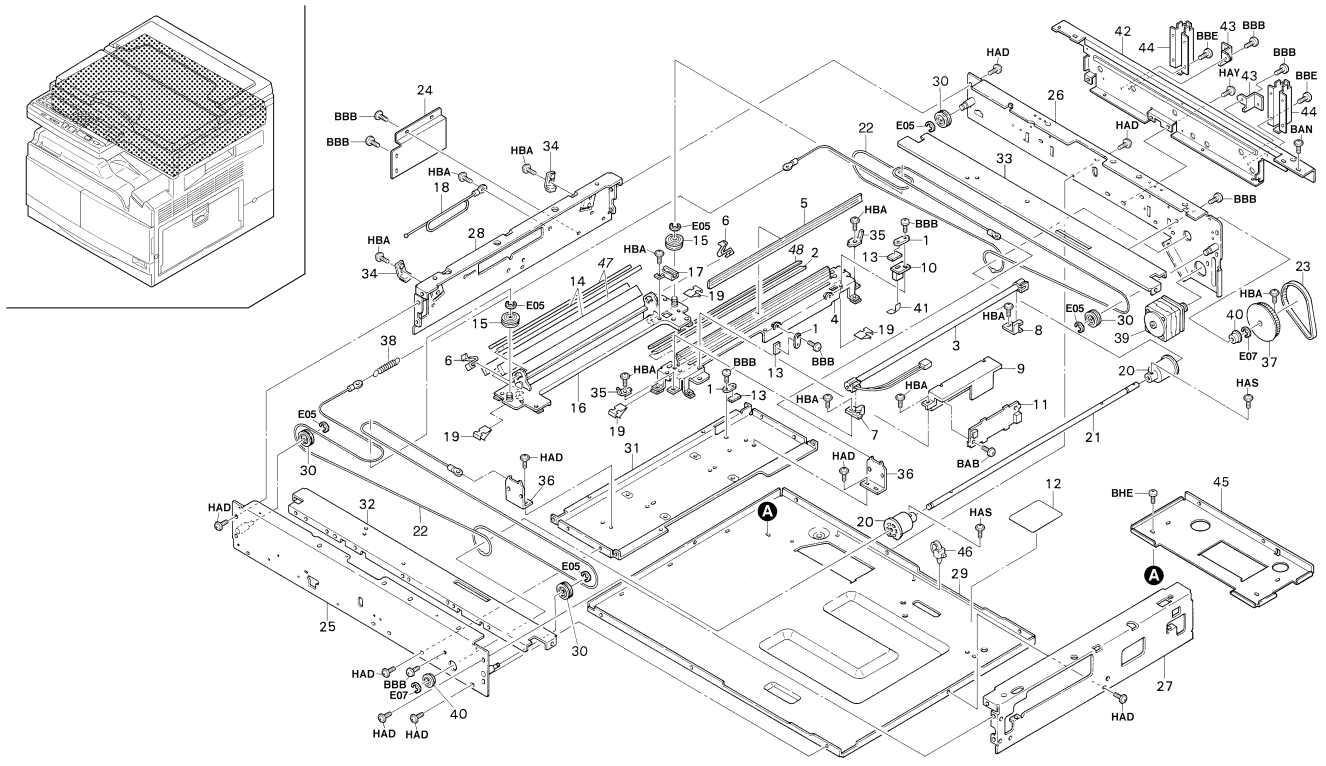
A
BBB
BBE
BAN
HAY
BBB
BBE
BBB
HAD
HAD
BBB
HBA
HBA
HBA

FIG. 8 OPTICAL SECTION I

Ref. No.	Part. No.	Description	Quantity 230V	Quantity 240V
1	49329402	JOINT,STOPPER SOL B	3	3
2	35912022	MIRROR A	1	1
3	35993060	PARTS LAMP SCANNER(SP)	1	1
4	35968250	MIRROR FRAME ASS'Y A(S P)	1	1
5	35912192	REFRECTOR,LIGHT	1	1
6	35912210	SPRING,MIRROR HOLDER	2	2
7	35912280	FRONT HOLDER,LAMP	1	1
8	35912290	REAR HOLDER,LAMP	1	1
9	35912380	COVER,INVERTER	1	1
10	35912430	GUIDE FFC1	1	1
11	35993070	PARTS INVERTER PCB(SP)	1	1
12	20305071	LABEL,CAUTION CONTACT GLASS	1	1
13	66018190	SIDE SEAL,HOUSING	3	3
14	35912032	MIRROR B	2	2
15	35912050	PULLEY B,SCANNER WIRE	2	2
16	35968260	MIRROR FRAME ASS'Y B(S P)	1	1
17	35912360	GUIDE FFC2	1	1
18	35912510	WIRE,SCANNER SECTION RETAINING	1	1
19	35912502	SPRING B,MIRROR HOLDER	4	4
20	35968110	STOPPER WIRE ASS'Y SP	2	2
21	35912090	SHAFT,SCANNER DRIVE	1	1
22	35912240	WIRE,SCANNER	2	2
23	35912350	BELT,SCANNER	1	1
24	2AB12071	LEFT REINFORCEMENT,SCANNER SUPPORT	1	1
25	35902080	FRONT FRAME,SCANNER	1	1
26	35902092	REAR FRAME,SCANNER	1	1
27	35902101	RIGHT FRAME,SCANNER	1	1
28	35902111	LEFT FRAME,SCANNER	1	1
29	35902121	BASE,SCANNER	1	1
30	35912040	PULLEY A,SCANNER WIRE	4	4
31	35912101	BASE,ISU	1	1
32	35912110	FRONT RAIL,SCANNER	1	1
33	35912120	REAR RAIL,SCANNER	1	1
34	35912130	GUIDE,WIRE	2	2
35	35912140	RETAINER,WIRE	2	2
36	35912170	MOUNT,WIRE	2	2
37	35912340	PULLEY,SCANNER DRIVE	1	1
38	35912480	SPRING,SCANNER WIRE	1	1
39	35927110	MOTOR,ISU	1	1
40	60912270	BEARING,688ZZ	2	2
41	35912520	FILM,SCANNER	1	1
42	2AB12161	REAR REINFORCEMENT,SCANNER	1	1
43	2AB12170	MOUNT,COVER	2	2
44	18512172	LEFT MOUNT,DF HINGE	2	2
45	2AB12030	INNER REAR REINFORCEMENT,SCANNER	1	1
46	M2107120	BINDING BAND SG-130	2	2
47	*2AB12190*	*DAMPER B,MIRROR*	*2*	*2*
48	*2AB12200*	*DAMPER A,MIRROR*	*1*	*1*

• Parts with "•" are component parts or sub-assemblies of the assembly appearing immediately above them.

• Parts with "• •" are component parts or sub-assembly with "•" appearing immediately above them.

FIG. 9 OPTICAL SECTION II

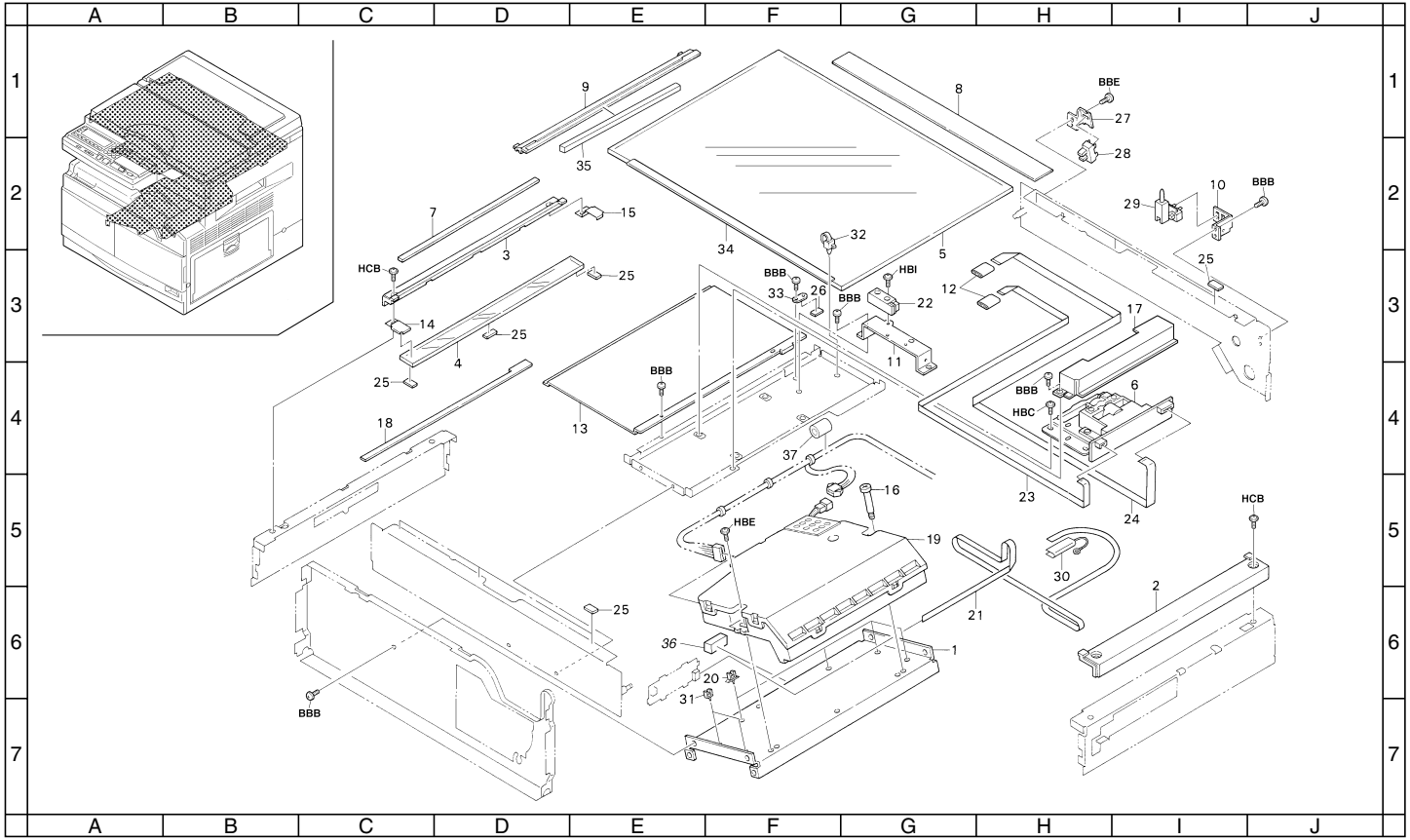

FIG. 9 OPTICAL SECTION II

Ref. No.	Part. No.	Description	Quantity	
			230V	240V
1	35902070	MOUNT,LSU	1	1
2	35904170	UPPER RIGHT COVER	1	1
3	35904180	UPPER LEFT COVER	1	1
4	35911450	CONTACT GLASS,ADF	1	1
5	35912010	CONTACT GLASS	1	1
6	2AB12180	UNIT,ISU	1	1
7	35912200	STANDARD PLATE,SHADING	1	1
8	35912230	REAR ORIGINAL SIZE INDICATOR (METRIC)	1	1
9	*2AB12230*	*LEFT ORIGINAL SIZE INDICATOR*	*1*	*1*
10	35912251	MOUNT,ORIGINAL RELEASE SWITCH	1	1
11	35912270	MOUNT,ORIGINAL DETECTION	1	1
12	35927900	CORE,CCD WIRE	2	2
13	2AB12100	COVER,WIRE CCD	1	1
14	35912390	FRONT HOLDER,ADF CONTACT GLASS	1	1
15	35912400	REAR HOLDER,ADF CONTACT GLASS	1	1
16	35912410	RETAINING PIN,LSU	1	1
17	2AB26210	COVER,ISU	1	1
18	35912450	LABEL,ORIGINAL SIZE INDICATOR (METRIC)	1	1
19	2AB13010	UNIT,LSU	1	1
20	M2109000	WIRE SADDLE,WS-1NS	4	4
21	35927141	WIRE,ISU	1	1
22	35927290	SENSOR,ORIGINAL DETECTION	1	1
23	35927500	WIRE A,CCD	1	1
24	35927510	WIRE B,CCD	1	1
25	29812291	CUSHION,CONTACT GLASS	9	9
26	66018190	SIDE SEAL,HOUSING	1	1
27	66212080	MOUNT,SCANNER SWITCH	1	1
28	72127100	PI SWITCH,OPTICAL SECTION	1	1
29	75827060	ORIGINAL DETECTION SWITCH	1	1
30	35927821	SHIELD,ISU WIRE	1	1
31	M2105740	MINIATURE CLAMP,UAMS-05S-2	2	2
32	M2107120	BINDING BAND SG-130	1	1
33	49329402	JOINT,STOPPER SOL B	1	1
34	35912490	FRONT ORIGINAL SIZE INDICATOR	1	1
35	35912531	SPONGE,ORIGINAL SIZE INDICATOR	1	1
36	*2AB27710*	*SHIELD B,GASKET*	*1*	*1*
37	*33927580*	*CORE,9-20X32*	*1*	*1*

• Parts with "•" are component parts or sub-assemblies of the assembly appearing immediately above them.

• Parts with "• •" are component parts or sub-assembly with "•" appearing immediately above them.

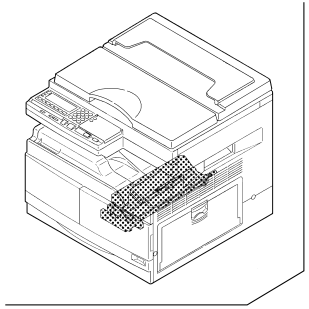

Be sure to order the tungstenwire Ref. No.7
by the 50meters spool(74669000).

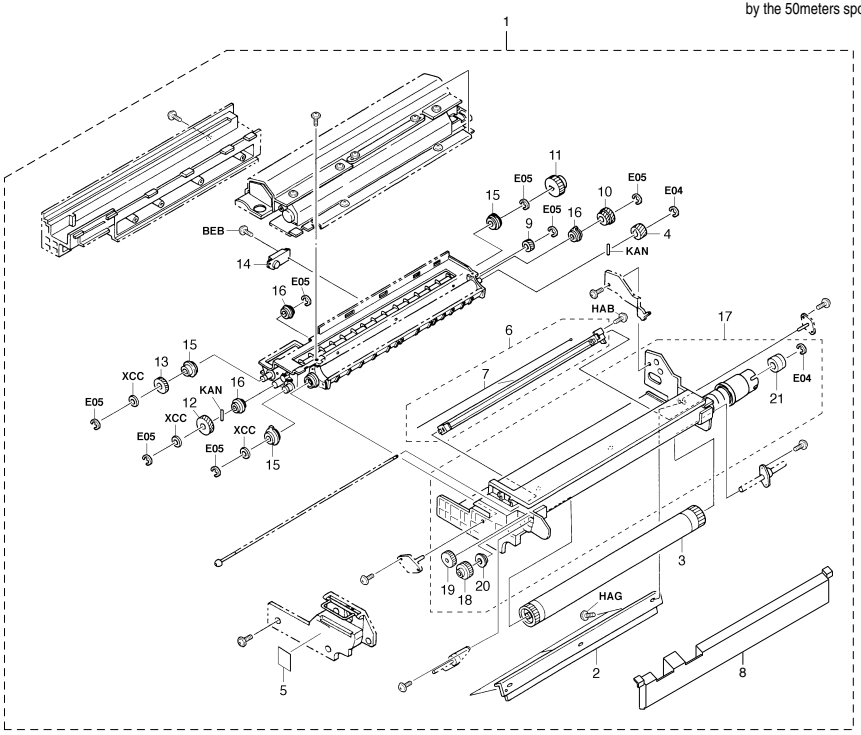

FIG. 10 IU UNIT

Ref. No.	Part. No.	Description	Quantity	
			230V	240V
1	2AB82020	IMAGING UNIT FOR P.S. VI200	1	1
2	•35993432	PARTS BLADE CLEANING (SP)	1	1
3	•19082140	SET,DRUM(EXP)	1	1
4	•35914660	GEAR 17,DEVELOPING SLEEVE	1	1
5	•2AG05200	LABEL,HIGH VOLTAGE CAUTION(EXP)	1	1
6	•2AB00510	CHARGE ASS'Y	1	1
7	••74669000	TUNGSTEN WIRE(OX) S•P (50M)	1spl	1spl
8	•35983050	BAG FELT ASS'Y	1	1
9	•35914670	GEAR 14,DEVELOPING IDLE	1	1
10	•35914680	GEAR 21-23,SPIRAL	1	1
11	•35914690	GEAR 27,DEVELOPING INPUT	1	1
12	•35914700	GEAR 26,SPIRAL	1	1
13	•35914710	GEAR 21,SPIRAL	1	1
14	•35914830	SENSOR,TONER	1	1
15	•71814100	BUSHING 6-21,MAIN UNIT	3	3
16	•75915090	BUSHING AGITATION ROTOR SHAFT	3	3
17	•35900544	CLEANING ASS'Y	1	1
18	••35918070	GEAR 16,CLEANING	1	1
19	••35918081	GEAR 16,IDLE	1	1
20	••63806290	BUSHING,6	1	1
21	••63818250	REAR BUSHING,TONER DISPOSAL ROLLER	1	1

• Parts with "•" are component parts or sub-assemblies of the assembly appearing immediately above them.

• Parts with "• •" are component parts or sub-assembly with "•" appearing immediately above them.

FIG. 11 FIXING SECTION

2AB

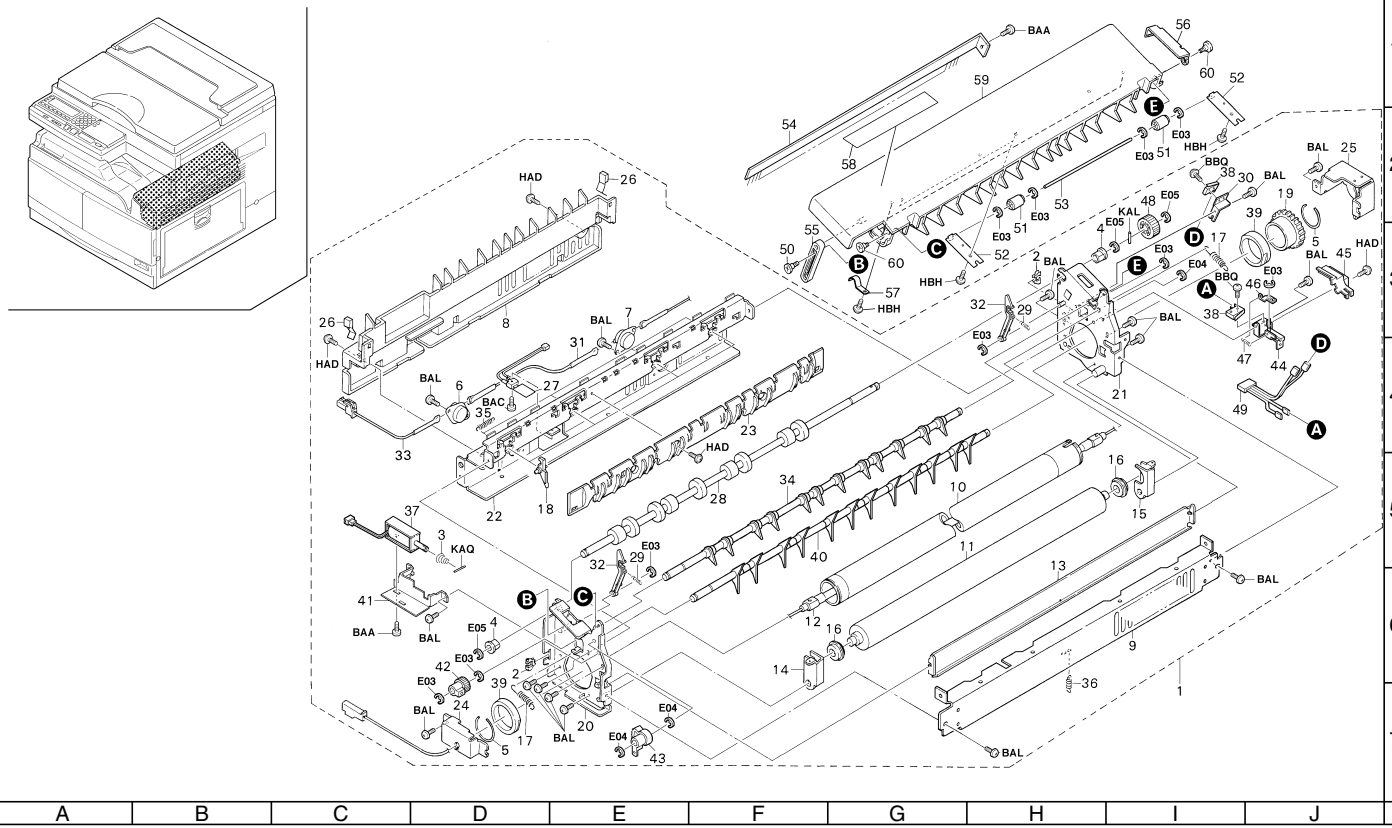

FIG. 11 FIXING SECTION

Ref. No.	Part. No.	Description	Quantity 230V	Quantity 240V
1	*2AB93028*	*PARTS,FIXING ASS'Y 230,SP*	*1*	*1*
2	•M2104260	EDGING,EDS-0607U(KITAGAWA)	2	2
3	•48529402	SPRING,STOPPER SOLENOID	1	1
4	•29806810	BUSHING,6 REGISTRATION	2	2
5	•29820190	CRESCENTIC STOPPER	2	2
6	•34920310	THERMOSTAT 140,FIXING	1	1
7	•34920320	THERMOSTAT 150,FIXING	1	1
8	•2AB20360	COVER,FIXING	1	1
9	•2AB20031	LOWER HOUSING,FIXING	1	1
10	•2AB20380	ROLLER,HEAT	1	1
11	•2AB93040	PARTS,ROLLER PRESSURE,SP	1	1
12	•19093100	PARTS HEATER 230 FIXING(SP)	1	1
13	•2AB20280	FRONT GUIDE,FIXING	1	1
14	•35920110	FRONT PRESSING PLATE,FIXING	1	1
15	•2AB20260	REAR PRESSING PLATE,FIXING	1	1
16	•35920130	BEARING,PRESSURE	2	2
17	•2AB20300	SPRING ,PRESSURE	2	2
18	•35920150	CLAW,SEPARATION	4	4
19	•35920240	GEAR 35,HEAT ROLLER	1	1
20	*•2AB20013*	*FRONT FRAME,FIXING*	*1*	*1*
21	*•2AB20023*	*REAR FRAME,FIXING*	*1*	*1*
22	•2AB20042	UPPER HOUSING,FIXING	1	1
23	•2AB20052	REAR GUIDE,FIXING	1	1
24	•35920290	FRONT MOUNT,FIXING HEATER	1	1
25	•2AB20270	REAR MOUNT,FIXING HEATER	1	1
26	•2AB20340	SPRING,FELT HOLDER	2	2
27	•19020060	THERMISTOR,FIXING	1	1
28	•2AB20181	ROLLER,EJECT	1	1
29	•65011400	SPRING,ADF HOOK	2	2
30	•2AB20080	MOUNT,EJECT SAFETY SWITCH	1	1
31	•35927210	JUNCTION WIRING,FIXING PROTECTOR	1	1
32	•2AB20071	HOOK,FIXING	2	2
33	•35927480	WIRE,FIXING JUNCTION	1	1
34	•2AB20090	LEFT GUIDE,FEED SHIFT	1	1
35	•63706260	SPRING,STACK BYPASS GEAR	4	4
36	•66020060	SPRING,FRONT FIXING GUIDE	1	1
37	•62227040	SOLENOID,FEED SHIFT	1	1
38	•68827010	SWITCH,INTERLOCK	2	2
39	•35920350	BUSHING,HEAT ROLLER	2	2
40	•2AB20100	RIGHT GUIDE,FEED SHIFT	1	1
41	•2AB20111	MOUNT,SOLENOID	1	1
42	•2AB20130	GEAR 21,FEED SHIFT	1	1
43	•2AB20140	GEAR 44,FEED SHIFT	1	1
44	•2AB20210	MOUNT,SWITCH BACK RELEASE SWITCH	1	1
45	•2AB20220	COVER,SWITCH BACK RELEASE SWITCH	1	1
46	•2AB20230	LEVER,REVERSE RELEASE SWITCH	1	1
47	•29808350	SPRING,CLEANING LEVER	1	1
48	•29807100	GEAR 16,BYPASS	1	1
49	•2AB27640	WIRE,FIXING SAFETY SWITCH	1	1
50	73912281	PIN,ORIGINAL HOLDER	1	1
51	2AB20150	PULLEY,EJECT	4	4
52	2AB20161	PLATE SPRING,EJECT PULLEY	4	4
53	2AB20200	SHAFT,EJECT	2	2
54	2AB20190	STATIC ELIMINATOR,EJECT	1	1
55	2AB20170	HINGE,EJECT COVER	1	1
56	2AB20350	GROUND PLATE,STATIC ELIMINATOR	1	1
57	2AB20370	UPPER SPRING,FELT HOLDER	2	2
58	20305130	LABEL L,HIGH TEMPERATURE CAUTION(EXP)	1	1
59	*2AB20062*	*UPPER GUIDE,EJECT*	*1*	*1*
60	29804160	PIN,ORIGINAL HOLDER	2	2

• Parts with "•" are component parts or sub-assemblies of the assembly appearing immediately above them.

• Parts with "• •" are component parts or sub-assembly with "•" appearing immediately above them.

FIG. 12 PAPER EJECT SECTION

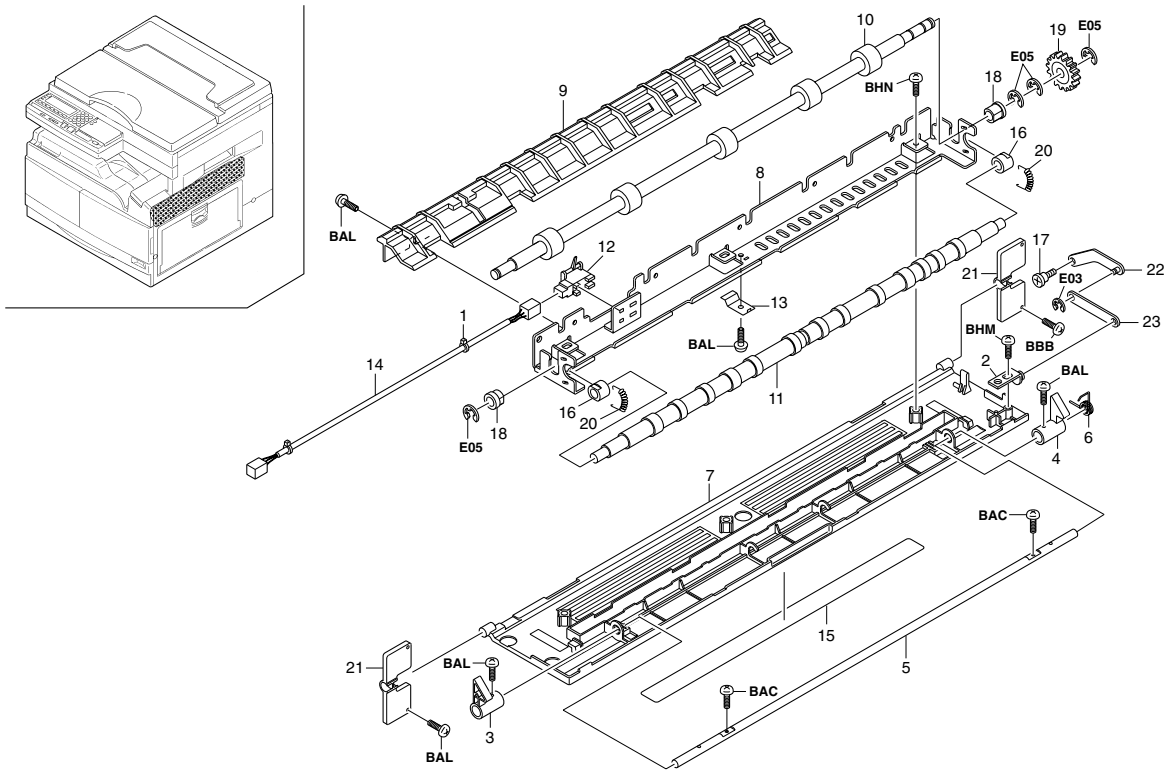

FIG. 12 PAPER EJECT SECTION

Ref. No.	Part. No.	Description	Quantity	
			230V	240V
1	M2607010	BINDING BAND,PLT1M	1	1
2	2AB02100	FULCRUM PLATE,HINGE	1	1
3	2AB02111	FRONT HOOK,EJECT	1	1
4	2AB02121	REAR HOOK,EJECT	1	1
5	2AB02130	SHAFT,SWITCH BACK HANDLE	1	1
6	2AB02141	REAR SPRING,SWITCH BACK	1	1
7	2AB04021	RIGHT COVER,MIDDLE	1	1
8	2AB21042	MOUNT,SWITCH BACK	1	1
9	2AB21050	GUIDE,SWITCH BACK	1	1
10	2AB21062	LOWER ROLLER,SWITCH BACK	1	1
11	2AB21070	UPPER ROLLER,SWITCH BACK	1	1
12	2AB93050	PARTS,SWITCH BACK,SP	1	1
13	2AB21090	GROUND PLATE,EJECT UNIT	1	1
14	2AB27650	WIRE,EJECT UNIT	1	1
15	2AB05070	LABEL,HIGH TEMPERATURE CAUTION(EXP)	1	1
16	28801300	BUSING, PAPER FEED	2	2
17	33914640	PIN,DISPOSAL ROLLER	1	1
18	29806810	BUSHING,6 REGISTRATION	2	2
19	29807100	GEAR 16,BYPASS	1	1
20	76007150	SPRING PAPER PAD PULLEY	2	2
21	2AB02070	FULCRUM PLATE,EJECT	2	2
22	2AB02080	HINGE A	1	1
23	2AB02090	HINGE B	1	1

• Parts with "•" are component parts or sub-assemblies of the assembly appearing immediately above them.

• Parts with "• •" are component parts or sub-assembly with "•" appearing immediately above them.

FIG. 13 DRIVING SECTION

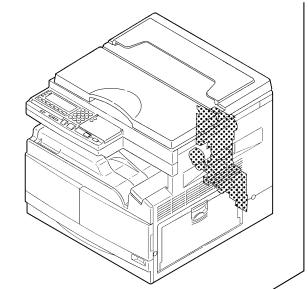

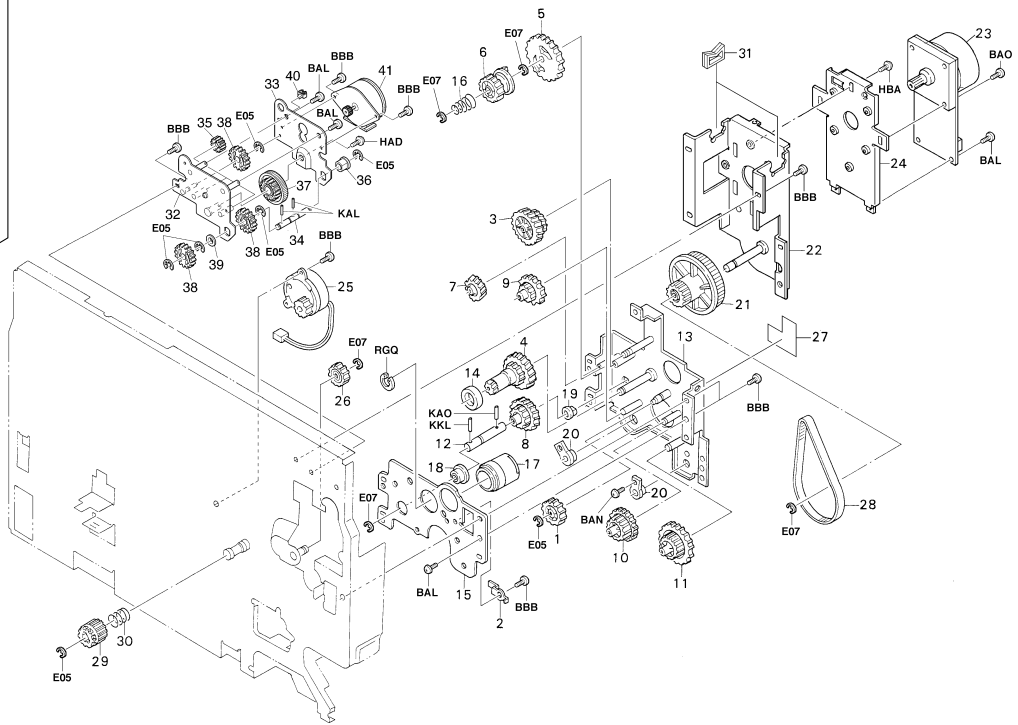

FIG. 13 DRIVING SECTION

2AB

Ref. No.	Part. No.	Description	Quantity 230V	Quantity 240V
1	45728116	GEAR 28,JOINT	1	1
2	35908041	GROUND PLATE,DRUM	1	1
3	35922030	GEAR H28/HZ38,IDLE	1	1
4	35922040	GEAR H39/Z24/HZ17,DRUM DRIVE	1	1
5	35922050	GEAR H51,JOINT DRIVE	1	1
6	35922060	GEAR 27,JOINT IDLE	1	1
7	35922070	GEAR H21,IDLE DEVELOPING	1	1
8	35922080	GEAR 23/HZ34,DEVELOPING DRIVE	1	1
9	2AB22090	GEAR 22/Z28,PAPER FEED DRIVE	1	1
10	35922100	GEAR 24/Z35,REGISTRATION DRIVE	1	1
11	35922110	GEAR 27/Z47,BYPASS DRIVE	1	1
12	2AB22100	SHAFT,DEVELOPING DRIVE	1	1
13	2AB22070	MOUNT,ENGINE DRIVE	1	1
14	35922180	BEARING,DRUM DRIVE	1	1
15	2AB22081	SUPPORT PLATE,ENGINE DRIVE	1	1
16	35922200	SPRING,FIXING JOINT	1	1
17	35922210	DUCT,TONER DISPOSAL	1	1
18	60912270	BEARING,688ZZ	1	1
19	67322230	BUSHING 8	1	1
20	74718091	BUSHING CLEANING UNIT	2	2
21	35922020	PULLEY 110/Z22,IDLE	1	1
22	19026020	MOUNT,MAIN PULLEY	1	1
23	2AB93060	PARTS,MOTOR MAIN,SP	1	1
24	19026011	MOUNT,DRIVE MOTOR	1	1
25	35993310	PARTS MOTOR TONER(SP)	1	1
26	35920310	GEAR 22,FIXING IDLE	1	1
27	35906730	REAR FILM A,FRAME	1	1
28	35922160	BELT 310P2M10,MAIN DRIVE	1	1
29	35960070	GEAR 20,TONER SUPPLY B	1	1
30	72107210	SPRING,BYPASS SOLENOID	1	1
31	M2104250	EDGING,EDS-17L(KITAGAWA)	2	2
32	2AB22031	MOUNT,SWITCH BACK DRIVE	1	1
33	2AB22041	REINFORCEMENT,SWITCH BACK DRIVE	1	1
34	2AB22061	SHAFT,SWITCH BACK DRIVE	1	1
35	45729206	GEAR,TONER FEED ROLLER	2	2
36	29806810	BUSHING,6 REGISTRATION	1	1
37	36006090	GEAR 19/63,IDLE	1	1
38	2AB22110	GEAR,SWITCH BACK DRIVE	3	3
39	76202270	LEFT BUSHING FULCRUM SHAFT	1	1
40	M2105740	MINIATURE CLAMP,UAMS-05S-2	1	1
41	2AB27040	MOTOR,EJECT	1	1

• Parts with "•" are component parts or sub-assemblies of the assembly appearing immediately above them.

• Parts with "• •" are component parts or sub-assembly with "•" appearing immediately above them.

FIG. 14 ELECTRICAL COMPONENTS I

2AB

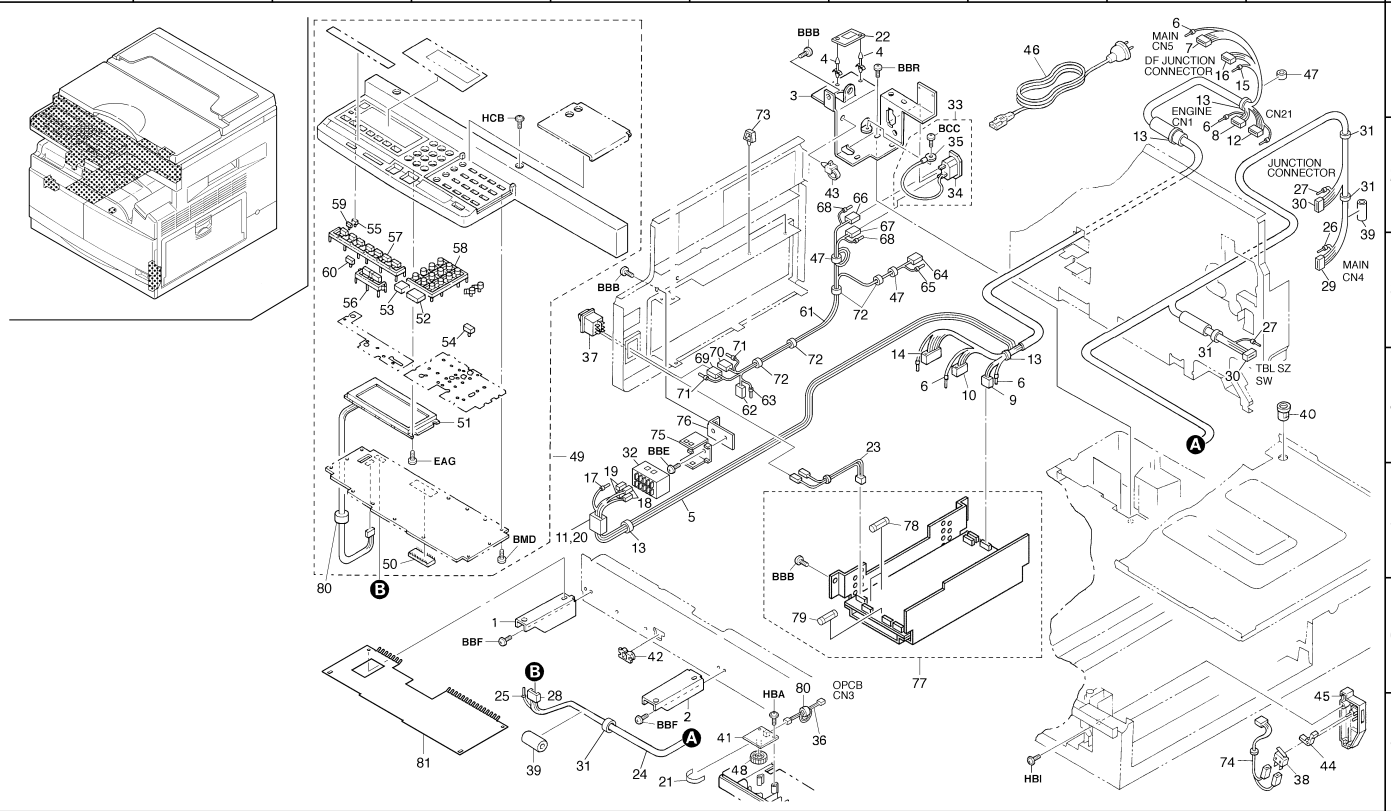

FIG. 14 ELECTRICAL COMPONENTS I

2AB-1

Ref. No.	Part. No.	Description	Quantity 230V	Quantity 240V
1	35902140	LEFT MOUNT,OPERATION UNIT	1	1
2	35902150	RIGHT MOUNT,OPERATION UNIT	1	1
3	35926013	MOUNT,INLET	1	1
4	M2108200	SPACER,KGLS-16S	2	2
5	2AB27570	WIRE,POWER SOURCE SECONDARY	1	1
6	•J0272900	CONTACTOR,BVH-21T-P1.1(JST)	29	29
7	•J0272060	RECEPTACLE VH 6P,VHR-6N	1	1
8	•J0272010	RECEPTACLE VH 7P,VHR-7N	1	1
9	•J0272080	RECEPTACLE VH8P,VHR-8N	1	1
10	•J0272100	RECEPTACLE VH10P,VHR-10N	1	1
11	•J0064000	HOUSING,SPARK SUPPRESSOR,172006-1	1	1
12	•J0280060	RECEPTACLE XH 6P,XHP-6(JST)	1	1
13	•M2307010	BINDING BAND,T18R	4	4
14	•J0260070	PLUG NH 7P,EHR-7	1	1
15	•J0250900	SOCKET,BHF-001T-0.8SS	4	4
16	•J0241040	PLUG SM 4P,SMP-04V-BC	1	1
17	•J0074900	POSITIVE CONTACTOR,#250,170333-1	4	4
18	•J0074010	POSITIVE CONNECTOR,#250,172076-1	2	2
19	•J0075010	POSITIVE CONNECTOR,#250,(YELLOW),172076-4	2	2
20	•J0064900	CONTACTOR,SPARK SUPPRESSOR,170284-1	2	2
21	19027230	FILM,VOLUME PCB	1	1
22	2AB27060	SENSOR,HUMIDITY	1	1
23	35927491	WIRE,MAIN SWITCH	1	1
24	2AB27620	WIRE,OPERATION UNIT	1	1
25	•J0450900	SOCKET,DF3-2428SC(HIROSE)	9	9
26	•J0441900	CONTACTOR,DF11-2428SC	9	9
27	•J0150900	CONTACTOR,175161-1(AMP)	6	6
28	•J0450090	PLUG,DF3-9S-2C(HIROSE)	1	1
29	•J0440100	PLUG,DF11-10DS-2C(HIROSE)	1	1
30	•J0150030	RECEPTACLE,175778-3(AMP)	2	2
31	•M2607010	BINDING BAND,PLT1M	4	4
32	34027070	RELAY 4P,POWER	1	1
33	63801050	INLET WIRING ASS'Y	1	1
34	•71827340	INLET 3P,POWER	1	1
35	•L0223130	ROUND TYPE TERMINAL,M4,LRT-51T-4FE	1	1
36	35927850	WIRE,LCD VOLUME	1	1
37	2AB27070	SWITCH,MAIN	1	1
38	68827010	SWITCH,INTERLOCK	1	1
39	*33927580*	*CORE,9-20X32*	*2*	*2*
40	M1203220	OPEN BUSHING,OCB-625	1	1

Ref. No.	Part. No.	Description	Quantity 230V	Quantity 240V
41	35928161	LCD VOLUME PCB	1	1
42	M2104200	EDGING EDS-1	1	1
43	M2107120	BINDING BAND SG-130	1	1
44	35904250	LEVER,RELEASE SWITCH	1	1
45	35904260	COVER,RELEASE SWITCH	1	1
46	18527460	POWER CORD 220	1	
46	29927231	POWER CODE AS(240)		1
47	63827080	FERRITE CORE	3	3
48	35927861	KNOB,VOLUME	1	1
49	2AB01022	OPERATION UNIT ASS'Y (EUR)	1	1
50	•2AB27021	IC,OPERATION UNIT ROM (EUR)	1	1
51	•35924040	LCD,OPERATION UNIT	1	1
52	•19068080	KEY TOP,PRINT(EUR)	1	1
53	•19068090	KEY TOP,STOP(EUR)	1	1
54	•19068100	KEY TOP,RESET(EUR)	1	1
55	•35968140	KEY TOP,FUNCTION	1	1
56	•35968170	KEY TOP,IMAGE DENSITY ADJUSTMENT	1	1
57	•35968180	KEY TOP,SIZE ADJUSTMENT	1	1
58	•35968190	KEY TOP TENKEY	1	1
59	•35968230	KEY TOP A	1	1
60	•35968240	KEY TOP,READING SENSITIVITY	1	1
61	2AB27612	WIRE,POWER SOURCE PRIMARY	1	1
62	•J0301020	RECEPTACLE 2P,5196-02	1	1
63	•J0300900	SOCKET,5194TL	2	2
64	•J0314020	PLUG 2P,5559-02P	1	1
65	•J0341900	PIN,MINI DRAWER,5558TL	2	2
66	•J0073010	POSITIVE CONNECTOR,#187,(BLUE),172074-6	1	1
67	•J0070010	POSITIVE CONNECTOR,#187,172074-1	1	1
68	•J0070910	POSITIVE CONTACTOR,#187,170331-1	2	2
69	•J0074010	POSITIVE CONNECTOR,#250,172076-1	1	1
70	•J0077010	POSITIVE CONNECTOR,#250,(BLUE),172076-6	1	1
71	•J0074900	POSITIVE CONTACTOR,#250,170333-1	2	2
72	•M0207000	BINDING BAND,KB-100-1	4	4
73	M2105740	MINIATURE CLAMP,UAMS-05S-2	2	2
74	35927650	RIGHT WIRE,DOOR RELEASE	1	1
75	34027120	MOUNT BASE,POWER RELAY	1	1
76	2AB26130	MOUNT,RELAY	1	1
77	2AB93091	PARTS,POWER SOURCE PCB 200,SP	1	1
78	•M1756000	FUSE,S505-6.3A(BUSSMANN)	2	2
79	•M1753000	FUSE,S505(BUSSMANN)	1	1

• Parts with "•" are component parts or sub-assemblies of the assembly appearing immediately above them.

• Parts with "• •" are component parts or sub-assembly with "•" appearing immediately above them.

FIG. 14 ELECTRICAL COMPONENTS I

2AB

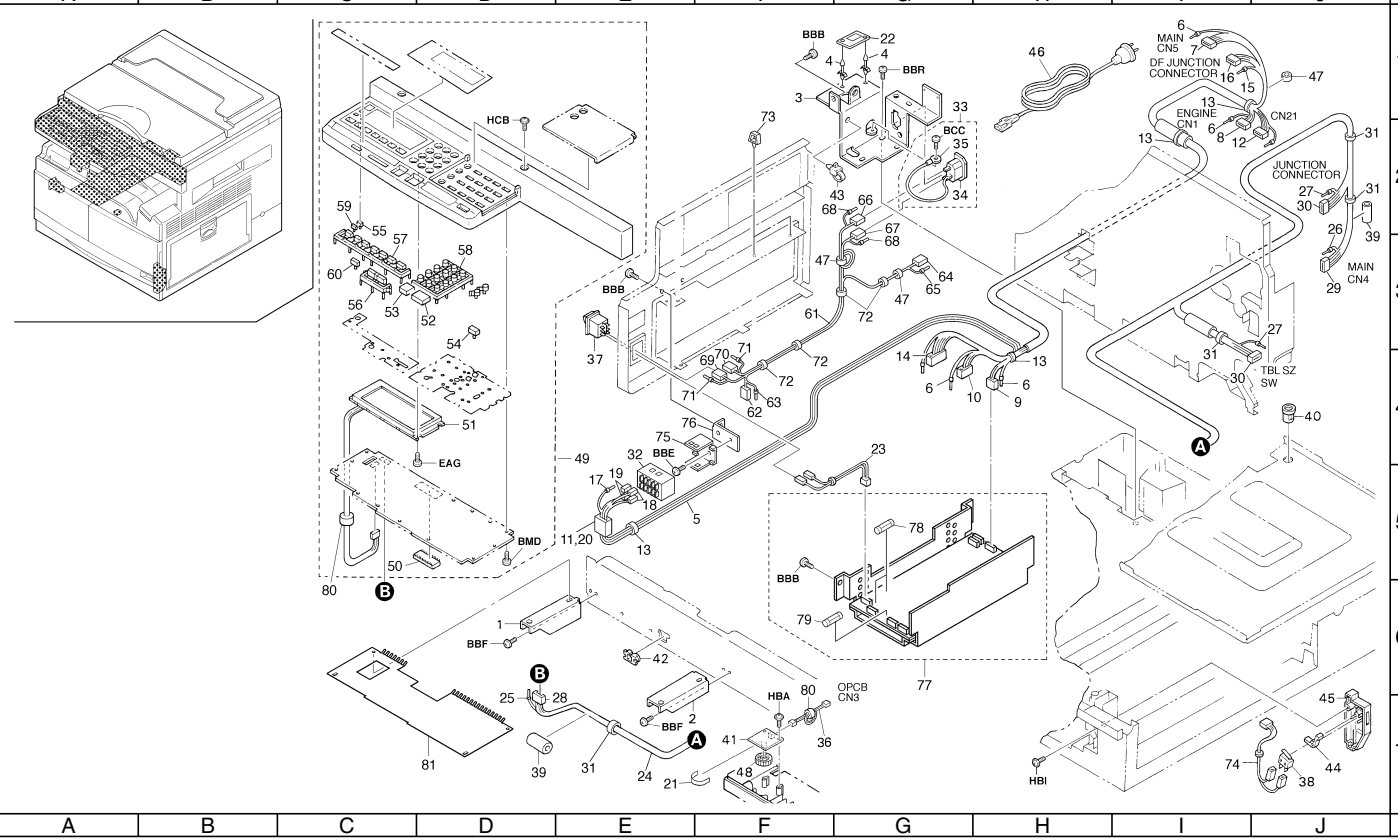

FIG. 14 ELECTRICAL COMPONENTS I

Ref. No.	Part. No.	Description	Quantity	
			230V	240V
80	65027470	CORE,7-15X18	2	2
81	2AB26220	SHIELD,OPERATION UNIT	1	1

• Parts with "•" are component parts or sub-assemblies of the assembly appearing immediately above them.

• Parts with "• •" are component parts or sub-assembly with "•" appearing immediately above them.

FIG. 15 ELECTRICAL COMPONENTS II

2AB

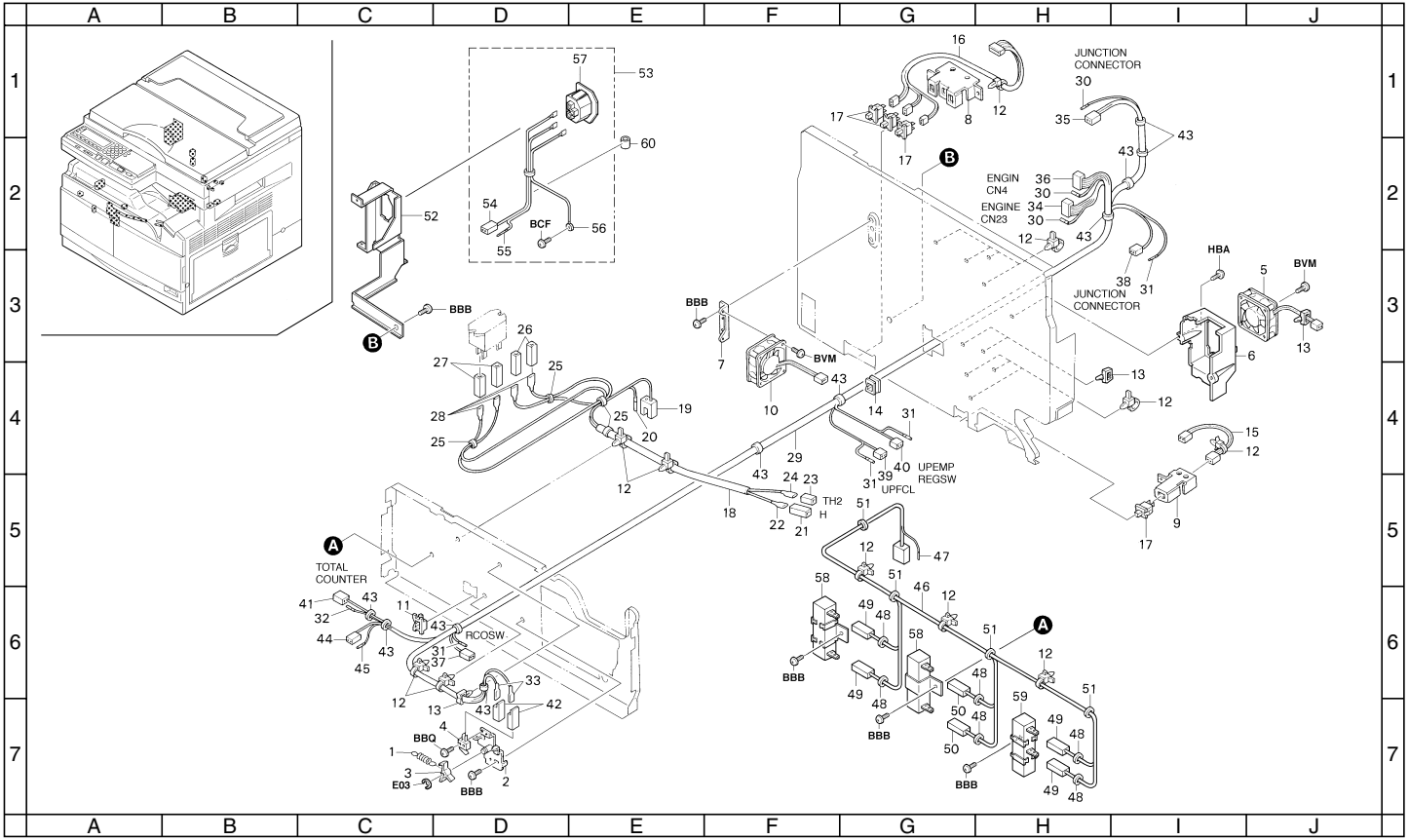

FIG. 15 ELECTRICAL COMPONENTS II

2AB

Ref. No.	Part. No.	Description	Quantity 230V	Quantity 240V
1	29808350	SPRING,CLEANING LEVER	1	1
2	35902210	MOUNT,SAFETY SWITCH	1	1
3	35902220	LEVER,SAFETY SWITCH	1	1
4	68827010	SWITCH,INTERLOCK	1	1
5	2AB23040	FAN,COOLING	1	1
6	2AB23010	DUCT,COOLING	1	1
7	2AB23020	MOUNT,COOLING FAN	1	1
8	35907120	MOUNT,SIZE DETECTION SWITCH	1	1
9	35907150	MOUNT,SIDE REGISTRATION DETECTION SWITCH	1	1
10	2AB23030	INNER FAN,COOLING	1	1
11	M2104220	EDGING,EDS-1717U	1	1
12	M2107120	BINDING BAND SG-130	16	16
13	M2105740	MINIATURE CLAMP,UAMS-05S-2	4	4
14	M2104210	EDGING,EDS-2	1	1
15	35927530	WIRE 2,CASSETTE SIZE	1	1
16	35927520	WIRE 1,CASSETTE SIZE	1	1
17	35927420	SWITCH,SIZE	4	4
18	35927331	WIRE,FIXING HEATER	1	1
19	•J0295020	RECEPTACLE,NVAR-02VS(JST)	1	1
20	•J0295020	RECEPTACLE,NVAR-02VS(JST)	2	2
21	•J5072010	RECEPTACLE,YLR-01VF(JST)	1	1
22	•J5072900	PIN,BYM-41T-P0.5A(JST)	1	1
23	•J5070010	PLUG,YLP-01V(JST)	1	1
24	•J5070900	SOCKET,BYF-41T-P0.5A(JST)	1	1
25	•M2607010	BINDING BAND,PLT1M	4	4
26	•J0074010	POSITIVE CONNECTOR,#250,172076-1	2	2
27	•J0077010	POSITIVE CONNECTOR,#250,(BLUE),172076-6	2	2
28	•J0074900	POSITIVE CONTACTOR,#250,170333-1	4	4
29	2AB27511	FRONT JUNCTION WIRING,COVER	1	1
30	•J0450900	SOCKET,DF3-2428SC(HIROSE)	16	16
31	•J0452900	PIN,DF3-EP2428PC(HIROSE)	18	18
32	•J0250900	SOCKET,BHF-001T-0.8SS	2	2
33	•J0166900	POSITIVE,CONTACTOR,175412-1(AMP)	2	2
34	•J0450050	PLUG,DF3-5S-2C(HIROSE)	1	1
35	•J0450070	PLUG,DF3-7S-2C(HIROSE)	1	1
36	•J0450140	PLUG,DF3-14S-2C(HIROSE)	1	1
37	•J0453030	PLUG,DF3-3EP-2C(HIROSE)	1	1
38	•J0453080	PLUG,DF3-8EP-2C(HIROSE)	1	1
39	•J0452020	RECEPTACLE,DF3AA-2EP-2C(HIROSE)	1	1
40	•J0452060	RECEPTACLE,DF3AA-6EP-2C(HIROSE)	1	1
41	•J0241020	PLUG SM 2P,SMP-02V-BC	1	1
42	•J0166010	POSITIVE,RECEPTACLE,174779-1(AMP)	2	2
43	•M2607010	BINDING BAND,PLT1M	10	10
44	•J0150020	RECEPTACLE,175778-2(AMP)	1	1
45	•J0150900	CONTACTOR,175161-1(AMP)	2	2
46	2AB27670	WIRE,RESISTOR PRIMARY	1	1
47	•J0300900	SOCKET,5194TL	2	2
48	•J0074900	POSITIVE CONTACTOR,#250,170333-1	6	6
49	•J0077010	POSITIVE CONNECTOR,#250,(BLUE),172076-6	4	4
50	•J0074010	POSITIVE CONNECTOR,#250,172076-1	2	2
51	•M2607010	BINDING BAND,PLT1M	4	4
52	2AB26122	MOUNT,OUTLET	1	1
53	2AB01050	OUTLET ASS'Y(200)	1	1
54	•J0315020	RECPTACLE 2P,5557-02R	1	1
55	•J0340900	SOCKET,MINI DRAWER,5556TL	2	2
56	•L0223130	ROUND TYPE TERMINAL,M4,LRT-51T-4FE	1	1
57	•33927270	OUTLET,3P POWER	1	1
58	36727600	RESISTOR,10 OHM 40W	2	2
59	36727610	RESISTOR,10 OHM 40W 157	1	1
60	63827080	FERRITE CORE	1	1

• Parts with "•" are component parts or sub-assemblies of the assembly appearing immediately above them.

• Parts with "• •" are component parts or sub-assembly with "•" appearing immediately above them.

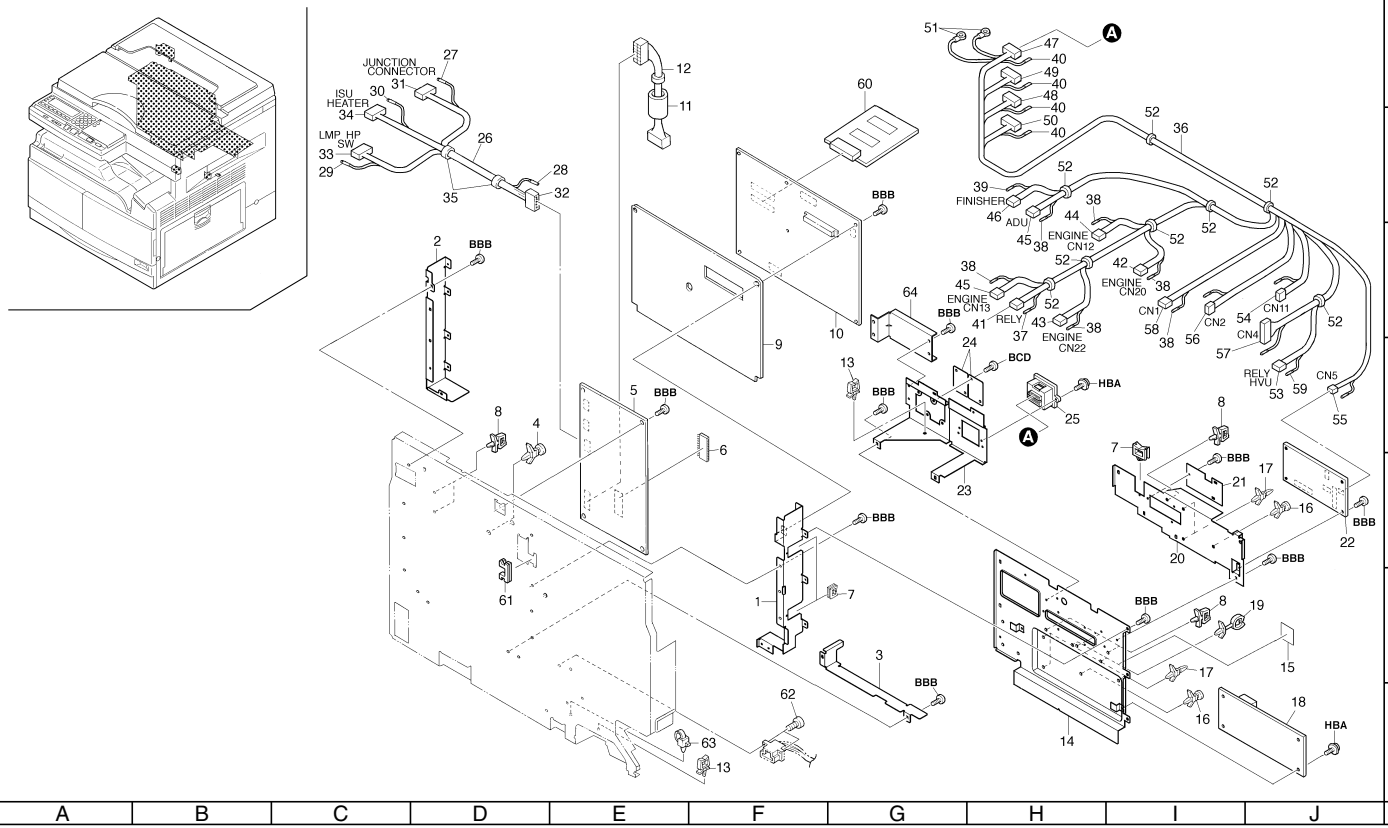
JUNCTION CONNECTOR
ISU HEATER
LMP HP SW
FINISHER
ADU
ENGINE CN12
ENGINE CN20
ENGINE CN13
ENGINE CN22
RELY
RELY HVU
CN1
CN2
CN4
CN11
CN5
BBB
BCD
HBA

FIG. 16 ELECTRICAL COMPONENTS III

Ref. No.	Part. No.	Description	Quantity 230V	Quantity 240V
1	2AB26010	RIGHT PARTITION,MAIN PCB	1	1
2	2AB26020	LEFT PARTITION,MAIN PCB	1	1
3	2AB26030	LOWER PARTITION,MAIN PCB	1	1
4	M2108800	SPACER,KGPS-3.5S(KITAGAWA)	1	1
5	2AB68042	ENGINE PCB ASS'Y SP	1	1
6	*2AB27052*	*IC,ENGINE ROM*	*1*	*1*
7	M2104220	EDGING,EDS-1717U	3	3
8	M2109010	WIRE SADDLE,WS-2NS	6	6
9	35927740	INSULATING PLATE,MAIN PCB	1	1
10	19001051	MAIN PCB ASS'Y(EXP)	1	1
11	61727600	CORE,13-30X34	1	1
12	35927460	WIRE,DESK	1	1
13	M2109000	WIRE SADDLE,WS-1NS	2	2
14	2AB26041	COVER,MAIN PCB	1	1
15	2AG05200	LABEL,HIGH VOLTAGE CAUTION(EXP)	1	1
16	M2108130	SPACER,KGPS-4S	2	2
17	M2108120	SPACER,KGLS-4S	5	5
18	2AB93102	PARTS,HIGH VOLTAGE PCB,SP	1	1
19	M2105990	CLAMP,HL-18-0(KITAGAWA)	2	2
20	2AB26051	COVER,ENGINE PCB	1	1
21	2AB26160	LID,ISU VOLUME	1	1
22	2AB93071	PARTS,MOTOR DRIVE PCB,SP	1	1
23	2AB26061	MOUNT,OPTION CONNECTOR	1	1
24	2AB26170	AUXILIARY PLATE,CONNECTOR	2	2
25	J0388460	RECEPTACLE,52918-4615(MOLEX)	1	1
26	2AB27520	JUNCTION WIRING,ISU SWITCH	1	1
27	•J0450900	SOCKET,DF3-2428SC(HIROSE)	3	3
28	•J0441900	CONTACTOR,DF11-2428SC	8	8
29	•J0250900	SOCKET,BHF-001T-0.8SS	3	3
30	•J0222900	PIN EL,LLM-01T-1.3E	2	2
31	•J0450030	PLUG,DF3-3S-2C(HIROSE)	1	1
32	•J0440100	PLUG,DF11-10DS-2C(HIROSE)	1	1
33	•J0250030	PLUG NH 3P,H3P-SHF-AA	1	1
34	•J0223020	RECEPTACLE EL 2P,ELR-02V	1	1
35	•M2607010	BINDING BAND,PLT1M	2	2
36	2AB27552	WIRE,TURN OVER MOTOR DRIVER	1	1
37	•J0242900	PIN SM,BYP-001T-0.6	4	4
38	•J0441900	CONTACTOR,DF11-2428SC	84	84
39	•J0421900	CONTACTOR,DF1B-2428SC(HIROSE)	6	6
40	•J0390900	CONTACTOR,50212-8100(MOLEX)	41	41
41	•J0243040	RECEPTACLE SM 4P,SMR-04V-B	1	1
42	•J0441060	RECEPTACLE,DF11-6DS-2C(HIROSE)	1	1
43	•J0441160	RECEPTACLE,DF11-16DS-2C(HIROSE)	1	1
44	•J0440200	PLUG,DF11-20DS-2C(HIROSE)	1	1
45	•J0440220	W-LOW SOCKET 22P,DF11-22DS-2C	2	2
46	•J0425060	PLUG S-6P,DF1B-6ES-2.5RC	1	1
47	•J0390110	RECEPTACLE,51090-1100(MOLEX)	1	1
48	•J0392110	RECEPTACLE,51090-1102(MOLEX)	1	1
49	•J0390120	RECEPTACLE,51090-1200(MOLEX)	1	1
50	•J0392120	RECEPTACLE,51090-1202(MOLEX)	1	1
51	*•L0221140*	*ROUND TYPE TERMINAL,V0.5-3(JST)*	*2*	*2*
52	•M2607010	BINDING BAND,PLT1M	8	8
53	•J0450020	PLUG,DF3-2S-2C(HIROSE)	1	1
54	•J5000040	PLUG PH 4P,PHR-4	1	1
55	•J0200060	PLUG,PHR-6(JST)	1	1
56	•J5000070	PLUG,PHR-7(JST)	1	1
57	•J5002110	RECEPTACLE,PHR-11(JST)	1	1
58	•J5002130	RECEPTACLE,PHR-13(JST)	1	1
59	•J0450900	SOCKET,DF3-2428SC(HIROSE)	2	2
60	19082130	SET MEMORY BOARD 8M(EXP)	1	1
61	M2104210	EDGING,EDS-2	1	1
62	74327180	PIN,CONNECTOR	2	2
63	M2107120	BINDING BAND SG-130	1	1
64	2AB26200	LEFT REAR SHIELD,MACHINE	1	1

• Parts with "•" are component parts or sub-assemblies of the assembly appearing immediately above them.

• Parts with "• •" are component parts or sub-assembly with "•" appearing immediately above them.

FIG. 17 MAIN WIRING 2AB

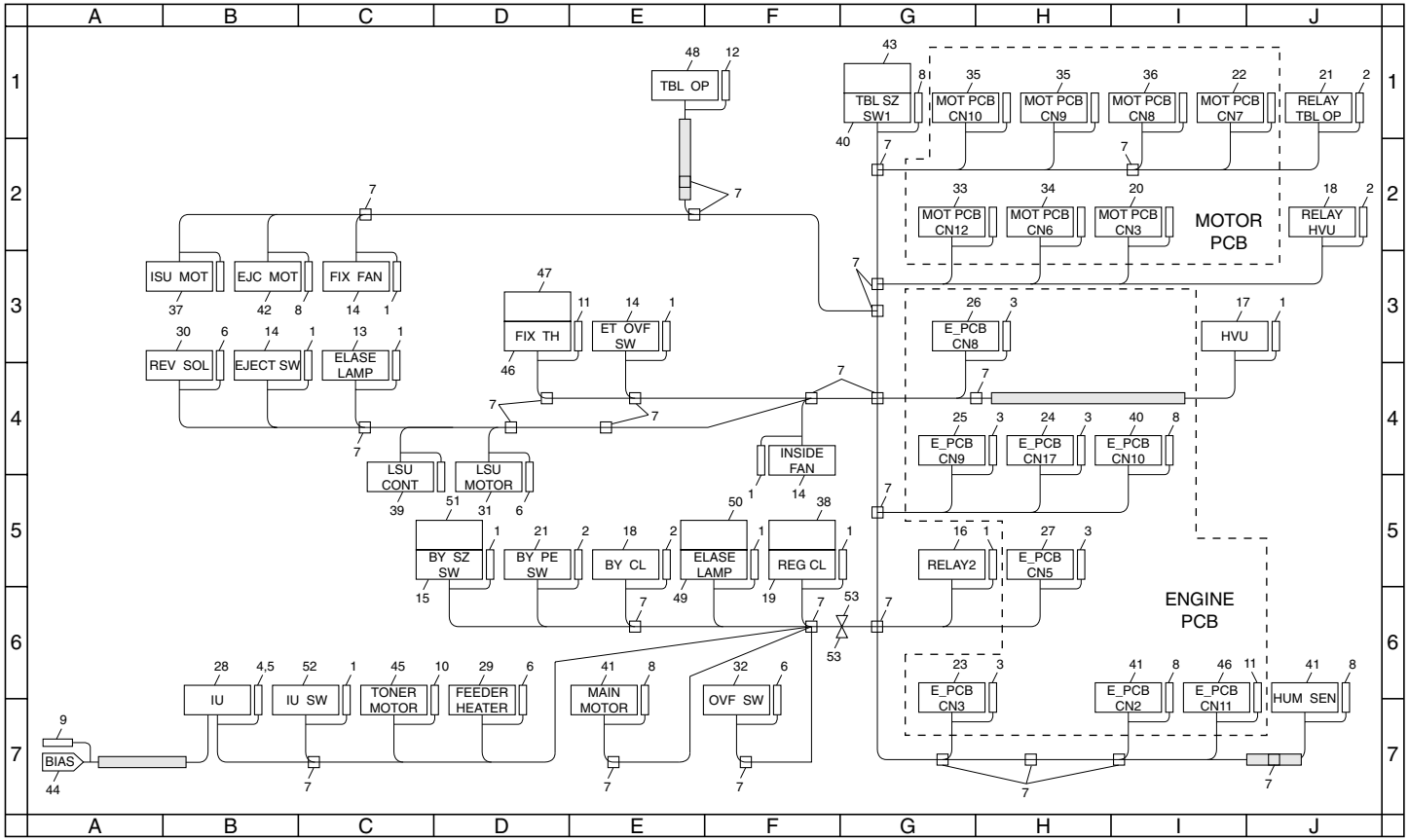

FIG. 17 MAIN WIRING

2AB

Ref. No.	Part. No.	Description	Quantity 230V	Quantity 240V
	2AB27562	WIRE,MAIN	1	1
1	•J0450900	SOCKET,DF3-2428SC(HIROSE)	45	45
2	•J0452900	PIN,DF3-EP2428PC(HIROSE)	10	10
3	•J0441900	CONTACTOR,DF11-2428SC	85	85
4	•J0418900	SOCKET,QR/P8-SC-121(HIROSE)	1	1
5	•J0418910	SOCKET,QR/P8-SC-111(HIROSE)	10	10
6	•J0250900	SOCKET,BHF-001T-0.8SS	11	11
7	•M2307010	BINDING BAND,T18R	26	26
8	•J0150900	CONTACTOR,175161-1(AMP)	23	23
9	•J0166900	POSITIVE,CONTACTOR,175412-1(AMP)	1	1
10	•J0341910	PIN,MINI DRAWER,5558T2L	2	2
11	•J0390900	CONTACTOR,50212-8100(MOLEX)	4	4
12	•J0331900	5263PBTL	3	3
13	•J0450020	PLUG,DF3-2S-2C(HIROSE)	1	1
14	•J0450030	PLUG,DF3-3S-2C(HIROSE)	4	4
15	•J0450040	PLUG,DF3-4S-2C(HIROSE)	1	1
16	•J0450080	RECEPTACLE,DF3-8S-2C(HIROSE)	1	1
17	•J0450120	PLUG,DF3-12S-2C(HIROSE)	1	1
18	•J0453020	PLUG,DF3-2EP-2C(HIROSE)	2	2
19	•J0456020	RECEPTACLE,DF3-2S-2C(16)(HIRO SE)	1	1
20	•J0260070	PLUG NH 7P,EHR-7	1	1
21	•J0453030	PLUG,DF3-3EP-2C(HIROSE)	2	2
22	•J0260060	EH PLUG 6P,EHR-6	1	1
23	•J0441040	RECEPTACLE,DF11-4DS-2C(HIROSE)	1	1
24	•J0440140	PLUG,DF11-14DS-2C(HIROSE)	1	1
25	•J0440280	PLUG,DF11-28DS-2C(HIROSE)	1	1
26	•J0441300	RECEPTACLE,DF11-30DS-2C(HIROSE)	1	1
27	•J0440260	PLUG,DF11-26DS-2C(HIROSE)	1	1
28	•J0418120	RECEPTACLE,QR/P8-12S-C(01)(HIROSE)	1	1
29	•J0241020	PLUG SM 2P,SMP-02V-BC	1	1
30	•J0240030	PLUG SM 3P,SMP-03V-NC	1	1
31	•J0241050	PLUG SM 5P,SMP-05V-BC	1	1
32	•J0250030	PLUG NH 3P,H3P-SHF-AA	1	1
33	•J5000020	PLUG PH 2P,PHR-2	1	1
34	•J5000030	PLUG PH 3P,PHR-3	1	1
35	•J5000040	PLUG PH 4P,PHR-4	2	2
36	•J5000050	PLUG,PHR-5(JST)	1	1
37	•J0200060	PLUG,PHR-6(JST)	1	1
38	•J0459020	CASE,DF3-2EP-2A(16)(HIROSE)	1	1
39	•J5000080	PLUG PH 8P,PHR-8	1	1
40	•J0150030	RECEPTACLE,175778-3(AMP)	2	2
41	•J0150040	RECEPTACLE,175778-4(AMP)	3	3
42	•J0150050	RECEPTACLE,175778-5(AMP)	1	1
43	•J0144030	CASE,175694-3(AMP)	1	1
44	•J0166010	POSITIVE,RECEPTACLE,174779-1(AMP)	1	1
45	•J0314020	PLUG 2P,5559-02P	1	1
46	•J0390020	RECEPTACLE,51090-0200(MOLEX)	2	2
47	•J0395020	CASE,53358-0210(MOLEX)	1	1
48	•J0331030	RECEPTACLE 3P,5264-03(MOLEX)	1	1
49	•J0451020	PLUG,DF3-2S-2C(18)(HIROSE)	1	1
50	•J0479020	CASE,DF3-2EP-2A(18)(HIROSE)	1	1
51	•J0455040	CASE,DF3-4EP-2A(HIROSE)	1	1
52	•J0150020	RECEPTACLE,175778-2(AMP)	1	1
53	•L4040000	CLOSE TYPE TERMINAL,0.5-1.75,CE-1	2	2

• Parts with "•" are component parts or sub-assemblies of the assembly appearing immediately above them.

• Parts with "• •" are component parts or sub-assembly with "•" appearing immediately above them.

for OPTION

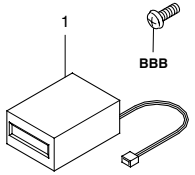

TOTAL COUNTER

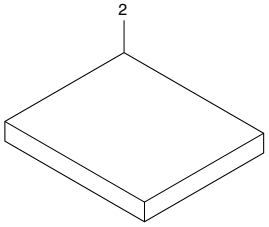

2M

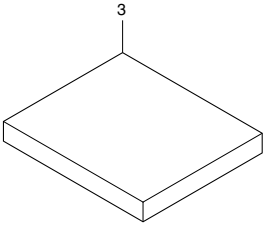

4M

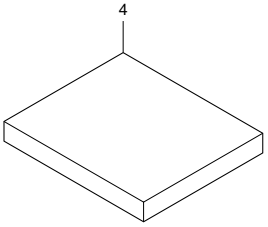

8M

MEMORY BOARD

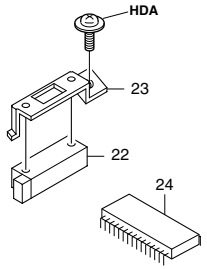

for SERVICE

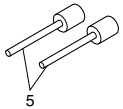

PIN LSU



PIN CASSETTE

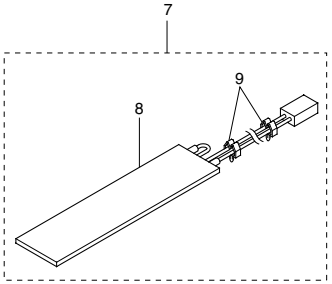

SCANNER HEATER

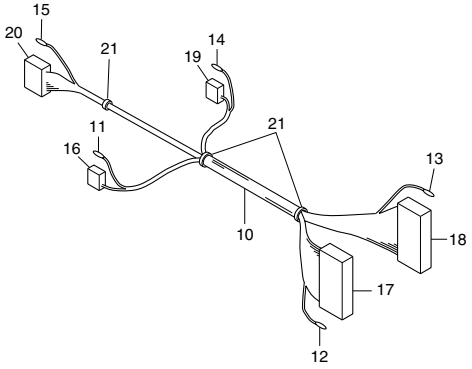

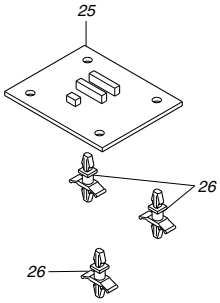

HEATER FEEDER

FIG. 18 OPTIONS & SERVICE PARTS

Ref. No.	Part. No.	Description	Quantity	
			230V	240V
1	65027340	TOTAL COUNTER	1	1
2	19082110	SET MEMORY BOARD 2M(EXP)	1	1
3	19082120	SET MEMORY BOARD 4M(EXP)	1	1
4	19082130	SET MEMORY BOARD 8M(EXP)	1	1
5	35968070	PIN,LSU	2	2
6	60907120	PIN,CASSETTE	2	2
7	35968100	SCANNER HEATER ASS'Y	1	1
8	•35968060	HEATER,SCANNER	1	1
9	•M2105410	CLAMP,K-104G	2	2
10	2AB68060	WIRE,HEATER FEEDER	1	1
11	•J0450900	SOCKET,DF3-2428SC(HIROSE)	2	2
12	•J0441900	CONTACTOR,DF11-2428SC	30	30
13	•J0440900	PIN,DF11-EP2428PC(HIROSE)	29	29
14	•J0272900	CONTACTOR,BVH-21T-P1.1(JST)	1	1
15	•J0242900	PIN SM,BYP-001T-0.6	2	2
16	•J0450020	PLUG,DF3-2S-2C(HIROSE)	1	1
17	•J0441300	RECEPTACLE,DF11-30DS-2C(HIROSE)	1	1
18	•J0443300	PLUG,DF11-30DEP-2C(HIROSE)	1	1
19	•J0272060	RECEPTACLE VH 6P,VHR-6N	1	1
20	•J0243020	RECEPTACLE SM 2P,SMR-02V-B	1	1
21	•M2307010	BINDING BAND,T18R	3	3
22	66006360	PAPER SWITCH	1	1
23	2AB60020	MOUNT,EJECT DETECTION	1	1
24	2AB60010	IC,OPERATION UNIT ROM OPTION	1	1
25	*35993450*	*PARTS,FEEDER HEATER PCB(SP)*	*1*	*1*
26	*M2108000*	*CARD SPACER 4.8*	*3*	*3*

• Parts with "•" are component parts or sub-assemblies of the assembly appearing immediately above them.

• Parts with "• •" are component parts or sub-assembly with "•" appearing immediately above them.

Part. No.	Description	Quantity 230V	Quantity 240V	Fig. No.
18512172	LEFT MOUNT,DF HINGE	2	2	8
18527460	POWER CORD 220	1		14
19000045	CASSETTE ASS'Y(EXP)	1	1	3
19000051	DISPOSAL TANK ASS'Y	1	1	1
19001051	MAIN PCB ASS'Y(EXP)	1	1	16
19002010	CUSHION,MEMORY BOARD	1	1	1
19004060	FRONT LID,COVER	1	1	1
19005030	LABEL,CASSETTE OPERATION (EXP)	1	1	3
19005080	LABEL,MEMORY INSERTION	1	1	1
19005110	LABEL,EJECT	1	1	1
19005120	LABEL,BYPASS OPERATION	1	1	5
19005130	LABEL,CASSETTE CAUTION	1	1	3
19006010	SHAFT,PAPER FEED(METRIC)	1	1	4
19006030	CLUTCH,PAPER FEED	1	1	4
19006040	RIGHT ROLLER,REGISTRATION	1	1	6
19007030	REAR SPRING,CASSETTE	1	1	3
19007040	FRONT CLAW,CASSETTE	1	1	3
19007070	REINFORCEMENT,CURSOR	1	1	3
19007080	MOUNT BASE,CURSOR	1	1	3
19007090	LEVER,CURSOR	1	1	3
19007100	RATCHET,CURSOR	1	1	3
19007120	PROTECTING PLATE,CURSOR	1	1	3
19007130	FILM,CASSETTE CLAW	2	2	3
19012010	COVER A,PLATEN	1	1	7
19012030	RIGHT BASE,MAT	1	1	7
19012041	MAT,ORIGINAL HOLDER	1	1	7
19012050	SHEET,ORIGINAL HOLDER	1	1	7
19012060	HINGE,ORIGINAL HOLDER	2	2	7
19012090	RIGHT MOVING PLATE,MAT	1	1	7
19012100	LEFT MOVING PLATE,MAT	1	1	7
19016010	CLEANER,TRANSFER	1	1	6
19020060	THERMISTOR,FIXING	1	1	11
19026011	MOUNT,DRIVE MOTOR	1	1	13
19026020	MOUNT,MAIN PULLEY	1	1	13
19026110	MOUNT BASE,POWER SOURCE	1	1	2
19026140	MOUNT,PI	1	1	1
19026150	GROUND PLATE,LOWER CASSETTE	1	1	2
19027230	FILM,VOLUME PCB	1	1	14
19068080	KEY TOP,PRINT(EUR)	1	1	14
19068090	KEY TOP,STOP(EUR)	1	1	14
19068100	KEY TOP,RESET(EUR)	1	1	14
19068230	CURSOR ASS'Y(SP)	1	1	3
19082110	SET MEMORY BOARD 2M(EXP)	1	1	18
19082120	SET MEMORY BOARD 4M(EXP)	1	1	18
19082130	SET MEMORY BOARD 8M(EXP)	2	2	16, 18
19082140	SET,DRUM(EXP)	1	1	10
19093100	PARTS HEATER 230 FIXING(SP)	1	1	11
2AB00110	ORIGINAL HOLDER ASS'Y	1	1	7
2AB00510	CHARGE ASS'Y	1	1	10
2AB01022	OPERATION UNIT ASS'Y (EUR)	1	1	14
2AB01050	OUTLET ASS'Y(200)	1	1	15
2AB02040	REINFORCEMENT A,FRAME	1	1	2
2AB02050	SHAFT,REINFORCEMENT	1	1	2
2AB02060	SHAFT,SCANNER SUPPORT	1	1	2
2AB02070	FULCRUM PLATE,EJECT	2	2	12
2AB02080	HINGE A	1	1	12
2AB02090	HINGE B	1	1	12
2AB02100	FULCRUM PLATE,HINGE	1	1	12
2AB02111	FRONT HOOK,EJECT	1	1	12
2AB02121	REAR HOOK,EJECT	1	1	12
2AB02130	SHAFT,SWITCH BACK HANDLE	1	1	12
2AB02141	REAR SPRING,SWITCH BACK	1	1	12
2AB02150	RETAINING PIN,FIXING	1	1	2
2AB02160	REINFORCEMENT,HANDLE	1	1	2
2AB02171	SHEET,SCANNER SUPPORT	1	1	2
2AB02180	LEFT SHEET,SCANNER SUPPORT	1	1	2
2AB02191	FRONT FULCRUM PLATE,CONVEYING	1	1	6
2AB02201	*REAR FULCRUM PLATE,CONVEYING*	*1*	*1*	*6*
2AB02210	REINFORCEMENT,BASE	1	1	2
2AB02220	LOWER REINFORCEMENT,BASE	1	1	2
2AB04010	RIGHT COVER	1	1	1
2AB04021	RIGHT COVER,MIDDLE	1	1	12
2AB04031	RIGHT FRONT COVER	1	1	1
2AB04040	UPPER REAR COVER	1	1	1
2AB04080	COVER,IU(EUR)	1	1	1
2AB04091	REAR COVER(EUR)	1	1	1
2AB04500	INNER REAR COVER	1	1	1
2AB04521	COVER,TRAY	1	1	1
2AB05070	LABEL,HIGH TEMPERATURE CAUTION(EXP)	1	1	12
2AB06010	LEFT ROLLER,REGISTRATION	1	1	4

Part. No.	Description	Quantity		Fig. No.
		230V	240V	
2AB06020	MOUNT,PAPER DUST CLEANING FELT	1	1	4
2AB06030	LOWER MOUNT,PAPER DUST CLEANING FELT	1	1	4
2AB06050	LOWER LEFT FELT,RESISTANCE	1	1	4
2AB06060	GROUND PLATE,PAPER DUST CLEANING	1	1	4
2AB06070	RIGHT FELT,RESISTANCE	1	1	6
2AB06080	LEFT FELT,RESISTANCE	1	1	4
2AB12030	INNER REAR REINFORCEMENT,SCANNER	1	1	8
2AB12071	LEFT REINFORCEMENT,SCANNER SUPPORT	1	1	8
2AB12100	COVER,WIRE CCD	1	1	9
2AB12161	REAR REINFORCEMENT,SCANNER	1	1	8
2AB12170	MOUNT,COVER	2	2	8
2AB12180	UNIT,ISU	1	1	9
2AB12190	*DAMPER B,MIRROR*	*2*	*2*	*8*
2AB12200	*DAMPER A,MIRROR*	*1*	*1*	*8*
2AB12230	*LEFT ORIGINAL SIZE INDICATOR*	*1*	*1*	*9*
2AB12510	COVER B,PLATEN	1	1	7
2AB13010	UNIT,LSU	1	1	9
2AB16061	REAR GUIDE,TRANSFER	1	1	6
2AB16080	SPACER A,TRANSFER GUIDE	1	1	6
2AB16090	SPACER B,TRANSFER GUIDE	1	1	6
2AB16100	LAMP,CLEANING LAMP	1	1	6
2AB16111	STATIC ELIMINATOR,TRANSFER	1	1	6
2AB16120	FRONT SPACER,TRANSFER	2	2	6
2AB16130	FRONT SLIDER,TRANSFER	3	3	6
2AB16140	SPACER,CONVEYING FULCRUM	1	1	6
2AB16150	FRONT SPRING,TRANSFER	1	1	6
2AB16160	SPACER C,TRANSFER GUIDE	2	2	6
2AB20013	*FRONT FRAME,FIXING*	*1*	*1*	*11*
2AB20023	*REAR FRAME,FIXING*	*1*	*1*	*11*
2AB20031	LOWER HOUSING,FIXING	1	1	11
2AB20042	UPPER HOUSING,FIXING	1	1	11
2AB20052	REAR GUIDE,FIXING	1	1	11
2AB20062	*UPPER GUIDE,EJECT*	*1*	*1*	*11*
2AB20071	HOOK,FIXING	2	2	11
2AB20080	MOUNT,EJECT SAFETY SWITCH	1	1	11
2AB20090	LEFT GUIDE,FEED SHIFT	1	1	11
2AB20100	RIGHT GUIDE,FEED SHIFT	1	1	11
2AB20111	MOUNT,SOLENOID	1	1	11
2AB20130	GEAR 21,FEED SHIFT	1	1	11
2AB20140	GEAR 44,FEED SHIFT	1	1	11
2AB20150	PULLEY,EJECT	4	4	11

Part. No.	Description	Quantity		Fig. No.
		230V	240V	
2AB20161	PLATE SPRING,EJECT PULLEY	4	4	11
2AB20170	HINGE,EJECT COVER	1	1	11
2AB20181	ROLLER,EJECT	1	1	11
2AB20190	STATIC ELIMINATOR,EJECT	1	1	11
2AB20200	SHAFT,EJECT	2	2	11
2AB20210	MOUNT,SWITCH BACK RELEASE SWITCH	1	1	11
2AB20220	COVER,SWITCH BACK RELEASE SWITCH	1	1	11
2AB20230	LEVER,REVERSE RELEASE SWITCH	1	1	11
2AB20260	REAR PRESSING PLATE,FIXING	1	1	11
2AB20270	REAR MOUNT,FIXING HEATER	1	1	11
2AB20280	FRONT GUIDE,FIXING	1	1	11
2AB20300	SPRING ,PRESSURE	2	2	11
2AB20340	SPRING,FELT HOLDER	2	2	11
2AB20350	GROUND PLATE,STATIC ELIMINATOR	1	1	11
2AB20360	COVER,FIXING	1	1	11
2AB20370	UPPER SPRING,FELT HOLDER	2	2	11
2AB20380	ROLLER,HEAT	1	1	11
2AB21042	MOUNT,SWITCH BACK	1	1	12
2AB21050	GUIDE,SWITCH BACK	1	1	12
2AB21062	LOWER ROLLER,SWITCH BACK	1	1	12
2AB21070	UPPER ROLLER,SWITCH BACK	1	1	12
2AB21090	GROUND PLATE,EJECT UNIT	1	1	12
2AB22031	MOUNT,SWITCH BACK DRIVE	1	1	13
2AB22041	REINFORCEMENT,SWITCH BACK DRIVE	1	1	13
2AB22061	SHAFT,SWITCH BACK DRIVE	1	1	13
2AB22070	MOUNT,ENGINE DRIVE	1	1	13
2AB22081	SUPPORT PLATE,ENGINE DRIVE	1	1	13
2AB22090	GEAR 22/Z28,PAPER FEED DRIVE	1	1	13
2AB22100	SHAFT,DEVELOPING DRIVE	1	1	13
2AB22110	GEAR,SWITCH BACK DRIVE	3	3	13
2AB23010	DUCT,COOLING	1	1	15
2AB23020	MOUNT,COOLING FAN	1	1	15
2AB23030	INNER FAN,COOLING	1	1	15
2AB23040	FAN,COOLING	1	1	15
2AB23050	SPONGE,COVER TRAY	1	1	1
2AB26010	RIGHT PARTITION,MAIN PCB	1	1	16
2AB26020	LEFT PARTITION,MAIN PCB	1	1	16
2AB26030	LOWER PARTITION,MAIN PCB	1	1	16
2AB26041	COVER,MAIN PCB	1	1	16
2AB26051	COVER,ENGINE PCB	1	1	16
2AB26061	MOUNT,OPTION CONNECTOR	1	1	16
2AB26122	MOUNT,OUTLET	1	1	15

Part. No.	Description	Quantity		Fig. No.
		230V	240V	
2AB26130	MOUNT,RELAY	1	1	14
2AB26160	LID,ISU VOLUME	1	1	16
2AB26170	AUXILIARY PLATE,CONNECTOR	2	2	16
2AB26200	LEFT REAR SHIELD,MACHINE	1	1	16
2AB26210	COVER,ISU	1	1	9
2AB26220	SHIELD,OPERATION UNIT	1	1	14
2AB26230	*COVER,RESISTANCE SWITCH*	*1*	*1*	*4*
2AB27021	IC,OPERATION UNIT ROM (EUR)	1	1	14
2AB27040	MOTOR,EJECT	1	1	13
2AB27052	*IC,ENGINE ROM*	*1*	*1*	*16*
2AB27060	SENSOR,HUMIDITY	1	1	14
2AB27070	SWITCH,MAIN	1	1	14
2AB27511	FRONT JUNCTION WIRING,COVER	1	1	15
2AB27520	JUNCTION WIRING,ISU SWITCH	1	1	16
2AB27552	WIRE,TURN OVER MOTOR DRIVER	1	1	16
2AB27562	WIRE,MAIN	1	1	17
2AB27570	WIRE,POWER SOURCE SECONDARY	1	1	14
2AB27580	WIRE,TRANSFER HIGH VOLTAGE	1	1	6
2AB27590	WIRE,MAIN HIGH VOLTAGE	1	1	2
2AB27600	WIRE,GRID	1	1	2
2AB27612	WIRE,POWER SOURCE PRIMARY	1	1	14
2AB27620	WIRE,OPERATION UNIT	1	1	14
2AB27640	WIRE,FIXING SAFETY SWITCH	1	1	11
2AB27650	WIRE,EJECT UNIT	1	1	12
2AB27661	WIRE,BYPASS TRAY	1	1	5
2AB27670	WIRE,RESISTOR PRIMARY	1	1	15
2AB27710	*SHIELD B,GASKET*	*1*	*1*	*9*
2AB60010	IC,OPERATION UNIT ROM OPTION	1	1	18
2AB60020	MOUNT,EJECT DETECTION	1	1	18
2AB68042	ENGINE PCB ASS'Y SP	1	1	16
2AB68060	WIRE,HEATER FEEDER	1	1	18
2AB82020	IMAGING UNIT FOR P.S. VI200	1	1	10
2AB93028	*PARTS,FIXING ASS'Y 230,SP*	*1*	*1*	*11*
2AB93040	PARTS,ROLLER PRESSURE,SP	1	1	11
2AB93050	PARTS,SWITCH BACK,SP	1	1	12
2AB93060	PARTS,MOTOR MAIN,SP	1	1	13
2AB93071	PARTS,MOTOR DRIVE PCB,SP	1	1	16
2AB93091	PARTS,POWER SOURCE PCB 200,SP	1	1	14
2AB93102	PARTS,HIGH VOLTAGE PCB,SP	1	1	16
2AB93110	*PARTS,CLUTCH BYPASS(SP)*	*1*	*4*	
2AG05200	LABEL,HIGH VOLTAGE CAUTION(EXP)	3	3	6, 10, 16

Part. No.	Description	Quantity		Fig. No.
		230V	240V	
20305071	LABEL,CAUTION CONTACT GLASS	1	1	8
20305130	LABEL L,HIGH TEMPERATURE CAUTION(EXP)	1	1	11
28801300	BUSING, PAPER FEED	2	2	12
29804160	PIN,ORIGINAL HOLDER	2	2	11
29806810	BUSHING,6 REGISTRATION	5	5	11, 12, 13
29807100	GEAR 16,BYPASS	2	2	11, 12
29808350	SPRING,CLEANING LEVER	2	2	11, 15
29812291	CUSHION,CONTACT GLASS	10	10	1, 9
29820190	CRESCENTIC STOPPER	2	2	11
29927231	POWER CODE AS(240)		1	14
33906880	STOPPER,BYPASS TABLE	2	2	5
33914640	PIN,DISPOSAL ROLLER	1	1	12
33927270	OUTLET,3P POWER	1	1	15
33927580	*CORE 9-20X32*	*3*	*3*	*9,14*
34027070	RELAY 4P,POWER	1	1	14
34027120	MOUNT BASE,POWER RELAY	1	1	14
34806140	STOPPER 4	1	1	4
34920310	THERMOSTAT 140,FIXING	1	1	11
34920320	THERMOSTAT 150,FIXING	1	1	11
35900544	CLEANING ASS'Y	1	1	10
35902060	REINFORCEMENT,MACHINE MIDDLE	1	1	2
35902070	MOUNT,LSU	1	1	9
35902080	FRONT FRAME,SCANNER	1	1	8
35902092	REAR FRAME,SCANNER	1	1	8
35902101	RIGHT FRAME,SCANNER	1	1	8
35902111	LEFT FRAME,SCANNER	1	1	8
35902121	BASE,SCANNER	1	1	8
35902130	BOTTOM REINFORCEMENT,BASE	1	1	2
35902140	LEFT MOUNT,OPERATION UNIT	1	1	14
35902150	RIGHT MOUNT,OPERATION UNIT	1	1	14
35902160	FRONT SUPPORT PLATE,HANDLE	2	2	2
35902170	RIGHT REAR SUPPORT PLATE,HANDLE	1	1	2
35902180	LEFT SUPPORT PLATE,MACHINE	1	1	2
35902190	RIGHT RETAINING PIN,MACHINE	1	1	2
35902200	RIGHT REAR GUIDE,HANDLE	1	1	2
35902210	MOUNT,SAFETY SWITCH	1	1	15
35902220	LEVER,SAFETY SWITCH	1	1	15
35902240	PIN,FIXING IDLE	1	1	2
35904011	FRONT COVER	1	1	1
35904031	LEFT COVER	1	1	1
35904070	COVER,CONVEYING UNIT	1	1	6
35904080	LOWER COVER,OPERATION UNIT	1	1	1

Part. No.	Description	Quantity 230V	Quantity 240V	Fig. No.
35904120	HANDLE,CONVEYING UNIT	1	1	6
35904130	SHAFT,CONVEYING HANDLE	1	1	6
35904170	UPPER RIGHT COVER	1	1	9
35904180	UPPER LEFT COVER	1	1	9
35904231	COVER,CASSETTE	1	1	3
35904240	AUXILIARY PLATE,CONVEYING UNIT	1	1	6
35904250	LEVER,RELEASE SWITCH	1	1	14
35904260	COVER,RELEASE SWITCH	1	1	14
35904270	HOOK,CONVEYING HANDLE	2	2	6
35904280	POSITIONING PLATE,CONVEYING LEVER	1	1	6
35904290	LEVER,CONVEYING RELEASE	1	1	6
35904300	SPRING,LEVER CONVEYING	1	1	6
35904320	LID A,OPTION	1	1	1
35904330	LID B,OPTION	1	1	1
35904343	INNER COVER,MACHINE	1	1	1
35904350	FRONT HINGE A,COVER	1	1	1
35904360	FRONT HINGE B,COVER	1	1	1
35904370	STOPPER,IU HOUSING	1	1	1
35904380	SPRING,STOPPER IU HOUSING	1	1	1
35904390	REAR SPRING,CONVEYING RELEASE	1	1	6
35904411	FILM,PROTECTION	2	2	1
35905090	LABEL,JAM REMOVEMENT	1	1	4
35905110	LABEL,IU OPERATION	1	1	1
35906032	PULLEY,PAPER FEED	6	6	4
35906052	HOUSING,PAPER FEED	1	1	4
35906060	LOWER GUIDE,PAPER FEED	1	1	4
35906070	MOUNT,REGISTRATION SW	1	1	4
35906090	GEAR 15,REGISTRATION	1	1	4
35906100	GUIDE FILM,CONFLUENCE	1	1	4
35906130	HOLDER,SPRING REGISTRATION	2	2	6
35906210	UPPER TABLE,BYPASS	1	1	5
35906220	LOWER TABLE,BYPASS	1	1	5
35906230	CURSOR,BYPASS	1	1	5
35906240	AUXILIARY PLATE,BYPASS TABLE	1	1	5
35906260	JUNCTION PLATE,SIZE DETECTION	1	1	5
35906290	SIZE INDICATION PLATE,BYPASS (METRIC)	1	1	5
35906300	FRONT FRAME,BYPASS	1	1	4
35906310	REAR FRAME,BYPASS	1	1	4
35906320	UPPER STAY,BYPASS	1	1	4
35906340	UPPER GUIDE,BYPASS	1	1	4

Part. No.	Description	Quantity 230V	Quantity 240V	Fig. No.
35906350	LOWER GUIDE,BYPASS	1	1	4
35906362	PULLEY,BYPASS	1	1	4
35906370	SHAFT,BYPASS	1	1	4
35906380	GUIDE,BYPASS LIFT	1	1	4
35906430	SPRING,BYPASS LIFT	1	1	4
35906441	PAD,BYPASS	1	1	4
35906451	HOUSING,BYPASS PAD	1	1	4
35906460	SPRING,BYPASS PAD	1	1	4
35906470	FRICTION PLATE,BYPASS LIFT	1	1	4
35906480	COVER,BYPASS	1	1	4
35906490	CAM,BYPASS LIFT	1	1	4
35906501	STOPPER,BYPASS LIFT	1	1	4
35906520	LOWER STAY,BYPASS	1	1	4
35906532	FRONT GUIDE,REGISTRATION	1	1	6
35906540	SEAL A,PAPER DUST CLEANING	1	1	6
35906550	SEAL B,PAPER DUST CLEANING	1	1	6
35906562	FILM,PAD PAPER FEED	1	1	4
35906581	COLLAR,BYPASS PAPER FEED	2	2	4
35906590	SPRING,REGISTRATION	2	2	6
35906600	FRONT FILM,PAPER FEED HOUSING	1	1	6
35906610	REAR FILM,PAPER FEED HOUSING	1	1	6
35906620	SPACER,PAD	2	2	4
35906630	CUSHION,CASSETTE	1	1	2
35906640	FILM,GUIDE BYPASS	1	1	4
35906650	VIBRATION INSULATOR,HOUSING PAD	1	1	4
35906660	FRONT FILM,REGISTRATION GUIDE	1	1	6
35906670	REAR FILM,REGISTRATION GUIDE	1	1	6
35906700	FILM,BYPASS TRAY	1	1	5
35906710	FILM,PAPER FEED HOUSING	1	1	4
35906720	FILM,BYPASS CLUTCH	1	1	4
35906730	REAR FILM A,FRAME	1	1	13
35906741	REAR FILM B,FRAME	1	1	2
35907014	CASSETTE	1	1	3
35907020	WORK PLATE,CASSETTE	1	1	3
35907040	FRICTION PLATE,CASSETTE WORK PLATE	1	1	3
35907091	CURSOR,PAPER TRAILING EDGE	1	1	3
35907111	TURN PLATE,SIZE DETECTION	1	1	3
35907120	MOUNT,SIZE DETECTION SWITCH	1	1	15
35907132	PROJECTION,SIDE REGISTRATION DETECTION	1	1	3
35907140	SPRING,SIDE REGISTRATION DETECTION	1	1	3

Part. No.	Description	Quantity 230V	Quantity 240V	Fig. No.
35907150	MOUNT,SIDE REGISTRATION DETECTION	1	1	15
35907170	MOUNT BASE,TRAILING EDGE CURSOR	1	1	3
35907181	GROUND PLATE,CASSETTE	1	1	3
35907190	MOUNT,SIZE INDICATION	1	1	3
35907200	SIZE INDICATION PLATE,CASSETTE	1	1	3
35907222	FRONT SPRING,WORK PLATE	1	1	3
35907230	LABEL,PAPER UPPER LIMIT	1	1	3
35907240	MOUNT,STOPPER CASSETTE	1	1	3
35908041	GROUND PLATE,DRUM	1	1	13
35910060	MOUNT BASE,CHARGE	1	1	2
35911240	SPRING,ADF SEPARATION PULLEY	1	1	3
35911450	CONTACT GLASS,ADF	1	1	9
35912010	CONTACT GLASS	1	1	9
35912022	MIRROR A	1	1	8
35912032	MIRROR B	2	2	8
35912040	PULLEY A,SCANNER WIRE	4	4	8
35912050	PULLEY B,SCANNER WIRE	2	2	8
35912090	SHAFT,SCANNER DRIVE	1	1	8
35912101	BASE,ISU	1	1	8
35912110	FRONT RAIL,SCANNER	1	1	8
35912120	REAR RAIL,SCANNER	1	1	8
35912130	GUIDE,WIRE	2	2	8
35912140	RETAINER,WIRE	2	2	8
35912170	MOUNT,WIRE	2	2	8
35912192	REFRECTOR,LIGHT	1	1	8
35912200	STANDARD PLATE,SHADING	1	1	9
35912210	SPRING,MIRROR HOLDER	2	2	8
35912230	REAR ORIGINAL SIZE INDICATOR (METRIC)	1	1	9
35912240	WIRE,SCANNER	2	2	8
35912251	MOUNT,ORIGINAL RELEASE SWITCH	1	1	9
35912270	MOUNT,ORIGINAL DETECTION	1	1	9
35912280	FRONT HOLDER,LAMP	1	1	8
35912290	REAR HOLDER,LAMP	1	1	8
35912340	PULLEY,SCANNER DRIVE	1	1	8
35912350	BELT,SCANNER	1	1	8
35912360	GUIDE FFC2	1	1	8
35912380	COVER,INVERTER	1	1	8
35912390	FRONT HOLDER,ADF CONTACT GLASS	1	1	9
35912400	REAR HOLDER,ADF CONTACT GLASS	1	1	9

Part. No.	Description	Quantity 230V	Quantity 240V	Fig. No.
35912410	RETAINING PIN,LSU	1	1	9
35912430	GUIDE FFC1	1	1	8
35912450	LABEL,ORIGINAL SIZE INDICATOR (METRIC)	1	1	9
35912480	SPRING,SCANNER WIRE	1	1	8
35912490	FRONT ORIGINAL SIZE INDICATOR	1	1	9
35912502	SPRING B,MIRROR HOLDER	4	4	8
35912510	WIRE,SCANNER SECTION RETAINING	1	1	8
35912520	FILM,SCANNER	1	1	8
35912531	SPONGE,ORIGINAL SIZE INDICATOR	1	1	9
35914660	GEAR 17,DEVELOPING SLEEVE	1	1	10
35914670	GEAR 14,DEVELOPING IDLE	1	1	10
35914680	GEAR 21-23,SPIRAL	1	1	10
35914690	GEAR 27,DEVELOPING INPUT	1	1	10
35914700	GEAR 26,SPIRAL	1	1	10
35914710	GEAR 21,SPIRAL	1	1	10
35914830	SENSOR,TONER	1	1	10
35916014	HOUSING,CONVEYING	1	1	6
35916020	ROLLER,TRANSFER	1	1	6
35916030	PULLEY,TRANSFER	2	2	6
35916041	FRONT BUSHING,TRANSFER	1	1	6
35916050	GEAR,TRANSFER	1	1	6
35916063	FRONT GUIDE,TRANSFER	1	1	6
35916100	TERMINAL,TRANSFER	1	1	6
35916141	FRONT MOUNT BASE,BUSHING TRANSFER	1	1	6
35916150	REAR MOUNT BASE,BUSHING TRANSFER	1	1	6
35916160	SPRING,TRANSFER	1	1	6
35916171	REAR BUSHING,TRANSFER	1	1	6
35916180	FRONT SPRING,CONVEYING GUIDE	4	4	6
35916200	SPRING,RELEASE AUXILIARY	1	1	6
35918070	GEAR 16,CLEANING	1	1	10
35918081	GEAR 16,IDLE	1	1	10
35920110	FRONT PRESSING PLATE,FIXING	1	1	11
35920130	BEARING,PRESSURE	2	2	11
35920150	CLAW,SEPARATION	4	4	11
35920240	GEAR 35,HEAT ROLLER	1	1	11
35920290	FRONT MOUNT,FIXING HEATER	1	1	11
35920310	GEAR 22,FIXING IDLE	1	1	13
35920350	BUSHING,HEAT ROLLER	2	2	11
35922020	PULLEY 110/Z22,IDLE	1	1	13
35922030	GEAR H28/HZ38,IDLE	1	1	13

Part. No.	Description	Quantity 230V	Quantity 240V	Fig. No.
35922040	GEAR H39/Z24/HZ17,DRUM DRIVE	1	1	13
35922050	GEAR H51,JOINT DRIVE	1	1	13
35922060	GEAR 27,JOINT IDLE	1	1	13
35922070	GEAR H21,IDLE DEVELOPING	1	1	13
35922080	GEAR 23/HZ34,DEVELOPING DRIVE	1	1	13
35922100	GEAR 24/Z35,REGISTRATION DRIVE	1	1	13
35922110	GEAR 27/Z47,BYPASS DRIVE	1	1	13
35922160	BELT 310P2M10,MAIN DRIVE	1	1	13
35922180	BEARING,DRUM DRIVE	1	1	13
35922200	SPRING,FIXING JOINT	1	1	13
35922210	DUCT,TONER DISPOSAL	1	1	13
35924040	LCD,OPERATION UNIT	1	1	14
35926013	MOUNT,INLET	1	1	14
35926140	GROUND PLATE,FEEDER	1	1	2
35927110	MOTOR,ISU	1	1	8
35927141	WIRE,ISU	1	1	9
35927150	JUNCTION WIRING,PAPER FEED UNIT	1	1	4
35927190	SWITCH,BYPASS PE	1	1	4
35927210	JUNCTION WIRING,FIXING PROTECTOR	1	1	11
35927290	SENSOR,ORIGINAL DETECTION	1	1	9
35927331	WIRE,FIXING HEATER	1	1	15
35927420	SWITCH,SIZE	4	4	15
35927460	WIRE,DESK	1	1	16
35927470	WIRE,BYPASS PE JUNCTION	1	1	4
35927480	WIRE,FIXING JUNCTION	1	1	11
35927491	WIRE,MAIN SWITCH	1	1	14
35927500	WIRE A,CCD	1	1	9
35927510	WIRE B,CCD	1	1	9
35927520	WIRE 1,CASSETTE SIZE	1	1	15
35927530	WIRE 2,CASSETTE SIZE	1	1	15
35927540	WIRE,CLEANING LAMP JUNCTION	1	1	6
35927590	WIRE,REGISTRATION GROUND	1	1	6
35927650	RIGHT WIRE,DOOR RELEASE	1	1	14
35927740	INSULATING PLATE,MAIN PCB	1	1	16
35927821	SHIELD,ISU WIRE	1	1	9
35927850	WIRE,LCD VOLUME	1	1	14
35927861	KNOB,VOLUME	1	1	14
35927900	CORE,CCD WIRE	2	2	9
35928161	LCD VOLUME PCB	1	1	14
35960041	MOUNT,TOTAL COUNTER	1	1	2

Part. No.	Description	Quantity 230V	Quantity 240V	Fig. No.
35960070	GEAR 20,TONER SUPPLY B	1	1	13
35968060	HEATER,SCANNER	1	1	18
35968070	PIN,LSU	2	2	18
35968100	SCANNER HEATER ASS'Y	1	1	18
35968110	STOPPER WIRE ASS'Y SP	2	2	8
35968140	KEY TOP,FUNCTION	1	1	14
35968170	KEY TOP,IMAGE DENSITY ADJUSTMENT	1	1	14
35968180	KEY TOP,SIZE ADJUSTMENT	1	1	14
35968190	KEY TOP TENKEY	1	1	14
35968230	KEY TOP A	1	1	14
35968240	KEY TOP,READING SENSITIVITY	1	1	14
35968250	MIRROR FRAME ASS'Y A(S P)	1	1	8
35968260	MIRROR FRAME ASS'Y B(S P)	1	1	8
35983050	BAG FELT ASS'Y	1	1	10
35993060	PARTS LAMP SCANNER(SP)	1	1	8
35993070	PARTS INVERTER PCB(SP)	1	1	8
35993150	PARTS CLUTCH REGISTRATION(SP)	1	1	4
35993310	PARTS MOTOR TONER(SP)	1	1	13
35993371	PARTS SIZE DETECTION PCB(SP)	1	1	5
35993432	PARTS BLADE CLEANING (SP)	1	1	10
35993450	*PARTS,FEEDER HEATER PCB(SP)*	*1*	*1*	*18*
36002190	RETAINER,DESK	1	1	2
36006090	GEAR 19/63,IDLE	1	1	13
36727600	RESISTOR,10 OHM 40W	2	2	15
36727610	RESISTOR,10 OHM 40W 157	1	1	15
45728116	GEAR 28,JOINT	1	1	13
45729206	GEAR,TONER FEED ROLLER	3	3	6, 13
48128107	PIN,CLEANING BLADE	2	2	4
48529402	SPRING,STOPPER SOLENOID	1	1	11
49028101	BUSH 8	5	5	4
49329402	JOINT,STOPPER SOL B	4	4	8, 9
60116080	PIN RAIL DEV.	1	1	3
60606101	BUSHING FEED BACK ROLLER	2	2	6
60904280	ORIGINAL POCKET	1	1	7
60904310	HINGE,ORIGINAL HOLDER	2	2	7
60907120	PIN,CASSETTE	2	2	18
60912270	BEARING,688ZZ	3	3	8, 13
61727600	CORE,13-30X34	1	1	16
62227040	SOLENOID,FEED SHIFT	1	1	11
63516110	SPRING,TRANSFER	2	2	5

Part. No.	Description	Quantity 230V	Quantity 240V	Fig. No.
63516160	SPRING,TRANSFORMER TERMINAL	2	2	2
63706260	SPRING,STACK BYPASS GEAR	4	4	11
63801050	INLET WIRING ASS'Y	1	1	14
63806290	BUSHING,6	1	1	10
63818250	REAR BUSHING,TONER DISPOSAL ROLLER	1	1	10
63827080	FERRITE CORE	4	4	14, 15
65011400	SPRING,ADF HOOK	2	2	11
65027340	TOTAL COUNTER	1	1	18
65027360	SWITCH,EMPTY	1	1	4
65027470	CORE,7-15X18	2	2	14
65902670	CUSHION RUBBER	5	5	2
65907311	HOOK,WORK PLATE	1	1	3
65907570	PIN,PULLEY CASSETTE	1	1	3
65907610	SEAL,PAPER EMPTY	1	1	3
66006360	PAPER SWITCH	1	1	18
66007120	SPRING,CURSOR C	1	1	3
66012180	ACTUTATION PLATE,ORIGINAL DETECTION	1	1	7
66018190	SIDE SEAL,HOUSING	4	4	8, 9
66020060	SPRING,FRONT FIXING GUIDE	1	1	11
66202090	SHAFT,HANDLE	4	4	2
66212080	MOUNT,SCANNER SWITCH	1	1	9
67322230	BUSHING 8	1	1	13
68727030	SWITCH,DUPLEX CONVEYING	1	1	4
68821030	PULLEY,EJECT	4	4	1
68827010	SWITCH,INTERLOCK	4	4	11, 14, 15
69312100	BASE,MAT	1	1	7
69312110	PLATE SPRING,ORIGINAL HOLDER	2	2	7
71802210	PIN,DRUM LIFT	1	1	2
71804400	MAGNET CATCHER	1	1	1
71814100	BUSHING 6-21,MAIN UNIT	3	3	10
71827340	INLET 3P,POWER	1	1	14
72107210	SPRING,BYPASS SOLENOID	1	1	13
72127100	PI SWITCH,OPTICAL SECTION	1	1	9
72907570	SPRING,BASE BOOST	2	2	1
73912281	PIN,ORIGINAL HOLDER	2	2	6, 11
74327180	PIN,CONNECTOR	2	2	16
74669000	TUNGSTEN WIRE(OX) S•P (50M)	1spl	1spl	10
74718091	BUSHING CLEANING UNIT	2	2	13
74718390	OVERFLOW SENSOR	1	1	1

Part. No.	Description	Quantity 230V	Quantity 240V	Fig. No.
75827060	ORIGINAL DETECTION SWITCH	1	1	9
75915090	BUSHING AGITATION ROTOR SHAFT	3	3	10
76007150	SPRING PAPER PAD PULLEY	2	2	12
76202270	LEFT BUSHING FULCRUM SHAFT	1	1	13
77906200	CASSETTE CATCHER	1	1	2
77906210	CASSETTE STOPPER	1	1	3
79904140	ORIGINAL HOLDER SPACER	2	2	7
J0064000	HOUSING,SPARK SUPPRESSOR,172006-1	1	1	14
J0064900	CONTACTOR,SPARK SUPPRESSOR,170284-1	2	2	14
J0070010	POSITIVE CONNECTOR,#187,172074-1	1	1	14
J0070910	POSITIVE CONTACTOR,#187,170331-1	2	2	14
J0073010	POSITIVE CONNECTOR,#187,(BLUE),172074-6	1	1	14
J0074010	POSITIVE CONNECTOR,#250,172076-1	7	7	14, 15
J0074900	POSITIVE CONTACTOR,#250,170333-1	16	16	14, 15
J0075010	POSITIVE CONNECTOR,#250,(YELLOW),172076-4	2	2	14
J0077010	POSITIVE CONNECTOR,#250,(BLUE),172076-6	7	7	14, 15
J0144030	CASE,175694-3(AMP)	1	1	17
J0150020	RECEPTACLE,175778-2(AMP)	2	2	15, 17
J0150030	RECEPTACLE,175778-3(AMP)	4	4	14, 17
J0150040	RECEPTACLE,175778-4(AMP)	3	3	17
J0150050	RECEPTACLE,175778-5(AMP)	1	1	17
J0150900	CONTACTOR,175161-1(AMP)	31	31	14, 15, 17
J0166010	POSITIVE,RECEPTACLE,174779-1(AMP)	3	3	15, 17
J0166900	POSITIVE,CONTACTOR,175412-1(AMP)	3	3	15, 17
J0200060	PLUG,PHR-6(JST)	2	2	16, 17
J0222900	PIN EL,LLM-01T-1.3E	2	2	16
J0223020	RECEPTACLE EL 2P,ELR-02V	1	1	16
J0240030	PLUG SM 3P,SMP-03V-NC	1	1	17
J0241020	PLUG SM 2P,SMP-02V-BC	2	2	15, 17
J0241040	PLUG SM 4P,SMP-04V-BC	1	1	14
J0241050	PLUG SM 5P,SMP-05V-BC	1	1	17
J0242900	PIN SM,BYP-001T-0.6	6	6	16, 18
J0243020	RECEPTACLE SM 2P,SMR-02V-B	1	1	18
J0243040	RECEPTACLE SM 4P,SMR-04V-B	1	1	16
J0250030	PLUG NH 3P,H3P-SHF-AA	2	2	16, 17
J0250900	SOCKET,BHF-001T-0.8SS	20	20	14, 15, 16, 17
J0260060	EH PLUG 6P,EHR-6	1	1	17
J0260070	PLUG NH 7P,EHR-7	2	2	14, 17
J0272010	RECEPTACLE VH 7P,VHR-7N	1	1	14
J0272060	RECEPTACLE VH 6P,VHR-6N	2	2	14, 18

Part. No.	Description	Quantity 230V	Quantity 240V	Fig. No.
J0272080	RECEPTACLE VH8P,VHR-8N	1	1	14
J0272100	RECEPTACLE VH10P,VHR-10N	1	1	14
J0272900	CONTACTOR,BVH-21T-P1.1(JST)	30	30	14, 18
J0280060	RECEPTACLE XH 6P,XHP-6(JST)	1	1	14
J0295020	RECEPTACLE,NVAR-02VS(JST)	3	3	15
J0300900	SOCKET,5194TL	4	4	14, 15
J0301020	RECEPTACLE 2P,5196-02	1	1	14
J0314020	PLUG 2P,5559-02P	2	2	14, 17
J0315020	RECPTACLE 2P,5557-02R	1	1	15
J0331030	RECEPTACLE 3P,5264-03(MOLEX)	1	1	17
J0331900	5263PBTL	3	3	17
J0340900	SOCKET,MINI DRAWER,5556TL	2	2	15
J0341900	PIN,MINI DRAWER,5558TL	2	2	14
J0341910	PIN,MINI DRAWER,5558T2L	2	2	17
J0388460	RECEPTACLE,52918-4615(MOLEX)	1	1	16
J0390020	RECEPTACLE,51090-0200(MOLEX)	2	2	17
J0390110	RECEPTACLE,51090-1100(MOLEX)	1	1	16
J0390120	RECEPTACLE,51090-1200(MOLEX)	1	1	16
J0390900	CONTACTOR,50212-8100(MOLEX)	45	45	16, 17
J0392110	RECEPTACLE,51090-1102(MOLEX)	1	1	16
J0392120	RECEPTACLE,51090-1202(MOLEX)	1	1	16
J0395020	CASE,53358-0210(MOLEX)	1	1	17
J0418120	RECEPTACLE,QR/P8-12S-C(01)(HIROSE)	1	1	17
J0418900	SOCKET,QR/P8-SC-121(HIROSE)	1	1	17
J0418910	SOCKET,QR/P8-SC-111(HIROSE)	10	10	17
J0421900	CONTACTOR,DF1B-2428SC(HIROSE)	6	6	16
J0425060	PLUG S-6P,DF1B-6ES-2.5RC	1	1	16
J0440100	PLUG,DF11-10DS-2C(HIROSE)	2	2	14, 16
J0440140	PLUG,DF11-14DS-2C(HIROSE)	1	1	17
J0440200	PLUG,DF11-20DS-2C(HIROSE)	1	1	16
J0440220	W-LOW SOCKET 22P,DF11-22DS-2C	2	2	16
J0440260	PLUG,DF11-26DS-2C(HIROSE)	1	1	17
J0440280	PLUG,DF11-28DS-2C(HIROSE)	1	1	17
J0440900	PIN,DF11-EP2428PC(HIROSE)	29	29	18
J0441040	RECEPTACLE,DF11-4DS-2C(HIROSE)	1	1	17
J0441060	RECEPTACLE,DF11-6DS-2C(HIROSE)	1	1	16
J0441160	RECEPTACLE,DF11-16DS-2C(HIROSE)	1	1	16
J0441300	RECEPTACLE,DF11-30DS-2C(HIROSE)	2	2	17, 18
J0441900	CONTACTOR,DF11-2428SC	216	216	14, 16, 17, 18
J0443300	PLUG,DF11-30DEP-2C(HIROSE)	1	1	18

Part. No.	Description	Quantity 230V	Quantity 240V	Fig. No.
J0450020	PLUG,DF3-2S-2C(HIROSE)	3	3	16, 17, 18
J0450030	PLUG,DF3-3S-2C(HIROSE)	5	5	16, 17
J0450040	PLUG,DF3-4S-2C(HIROSE)	1	1	17
J0450050	PLUG,DF3-5S-2C(HIROSE)	1	1	15
J0450070	PLUG,DF3-7S-2C(HIROSE)	1	1	15
J0450080	RECEPTACLE,DF3-8S-2C(HIROSE)	1	1	17
J0450090	PLUG,DF3-9S-2C(HIROSE)	1	1	14
J0450120	PLUG,DF3-12S-2C(HIROSE)	1	1	17
J0450140	PLUG,DF3-14S-2C(HIROSE)	1	1	15
J0450900	SOCKET,DF3-2428SC(HIROSE)	77	77	14, 15, 16, 17, 18
J0451020	PLUG,DF3-2S-2C(18)(HIROSE)	1	1	17
J0452020	RECEPTACLE,DF3AA-2EP-2C(HIROSE)	1	1	15
J0452060	RECEPTACLE,DF3AA-6EP-2C(HIROSE)	1	1	15
J0452900	PIN,DF3-EP2428PC(HIROSE)	28	28	15, 17
J0453020	PLUG,DF3-2EP-2C(HIROSE)	2	2	17
J0453030	PLUG,DF3-3EP-2C(HIROSE)	3	3	15, 17
J0453080	PLUG,DF3-8EP-2C(HIROSE)	1	1	15
J0455040	CASE,DF3-4EP-2A(HIROSE)	1	1	17
J0456020	RECEPTACLE,DF3-2S-2C(16)(HIROSE)	1	1	17
J0459020	CASE,DF3-2EP-2A(16)(HIROSE)	1	1	17
J0479020	CASE,DF3-2EP-2A(18)(HIROSE)	1	1	17
J5000020	PLUG PH 2P,PHR-2	1	1	17
J5000030	PLUG PH 3P,PHR-3	1	1	17
J5000040	PLUG PH 4P,PHR-4	3	3	16, 17
J5000050	PLUG,PHR-5(JST)	1	1	17
J5000070	PLUG,PHR-7(JST)	1	1	16
J5000080	PLUG PH 8P,PHR-8	1	1	17
J5002110	RECEPTACLE,PHR-11(JST)	1	1	16
J5002130	RECEPTACLE,PHR-13(JST)	1	1	16
J5070010	PLUG,YLP-01V(JST)	1	1	15
J5070900	SOCKET,BYF-41T-P0.5A(JST)	1	1	15
J5072010	RECEPTACLE,YLR-01VF(JST)	1	1	15
J5072900	PIN,BYM-41T-P0.5A(JST)	1	1	15
L0221140	*ROUND TYPE TERMINAL,V0.5-3(JST)*	*2*	*2*	*16*
L0223130	ROUND TYPE TERMINAL,M4,LRT-51T-4FE	2	2	14, 15
L4040000	CLOSE TYPE TERMINAL,0.5-1.75,CE-1	2	2	17
M0207000	BINDING BAND,KB-100-1	4	4	14
M1203220	OPEN BUSHING,OCB-625	1	1	14
M1753000	FUSE,S505(BUSSMANN)	1	1	14
M1756000	FUSE,S505-6.3A(BUSSMANN)	2	2	14

Part. No.	Description	Quantity		Fig. No.
		230V	240V	
M2104200	EDGING EDS-1	1	1	14
M2104210	EDGING,EDS-2	2	2	15, 16
M2104220	EDGING,EDS-1717U	4	4	15, 16
M2104250	EDGING,EDS-17L(KITAGAWA)	2	2	13
M2104260	EDGING,EDS-0607U(KITAGAWA)	2	2	11
M2105410	CLAMP,K-104G	2	2	18
M2105450	CLAMP,MN-2(KITAGAWA)	1	1	2
M2105740	MINIATURE CLAMP,UAMS-05S-2	11	11	2, 9, 13, 14, 15
M2105990	CLAMP,HL-18-0(KITAGAWA)	2	2	16
M2107120	BINDING BAND SG-130	21	21	8, 9, 14, 15, 16
M2108000	*CARD SPACER 4.8*	*3*	*3*	*18*
M2108120	SPACER,KGLS-4S	5	5	16
M2108130	SPACER,KGPS-4S	2	2	16
M2108200	SPACER,KGLS-16S	2	2	14
M2108800	SPACER,KGPS-3.5S(KITAGAWA)	1	1	16
M2109000	WIRE SADDLE,WS-1NS	6	6	9, 16
M2109010	WIRE SADDLE,WS-2NS	6	6	16
M2307010	BINDING BAND,T18R	33	33	14, 17, 18
M2607010	BINDING BAND,PLT1M	33	33	12, 14, 15, 16

CLASSFICATION OF THE SCREWS IN ILLUSTRATION

REF.	ITEM #	DESCRIPTION
BAA	B1003040	BINDING SCREW CVM3X4
BAB	B1003060	BINDING SCREW CVM3X6
BAC	B1003080	BINDING SCREW M3X8
BAL	B1003050	BINDING SCREW CVM3X5
BAN	B1004060	BINDING SCREW CVM4X6
BAO	B1004100	BINDING SCREW CVM4X10
BBB	B1303050	BINDING SCREW BVM3X5 (BLACK)
BBE	B1304060	BINDING SCREW BVM4X6 (BLACK)
BBF	B1304080	BINDING SCREW BVM4X8 (BLACK)
BBM	B1304120	BINDING SCREW BVM4X12 (BLACK)
BBQ	B1300100	BINDING SCREW BVM2.3X10 (BLACK)
BBR	B1303080	BINDING SCREW BVM3X8 (BLACK)
BCC	B1103080	BINDING SCREW VM3X8 (CR)
BCD	B1104040	BINDING SCREW VM4X4 (CR)
BCF	B1104080	BINDING SCREW VM4X8 (CR)
BCK	B1103050	BINDING SCREW CV3X5
BEB	B1603060	BINDING SCREW M3X6 (BRASS,NI)
BHE	B3023050	BINDING TAP-TIGHT SCREW M3X5
BHH	B3024100	BINDING TAP-TIGHT SCREW M4X10
BHN	B8013080	BINDING TAP-TIGHT SCREW M3X08
BHM	B3003060	TAPPING SCREW M3X6(B TYPE)
BMD	B1002060	BINDING SCREW M2X06 (CHROMATING)
BVM	B1303300	BINDING SCREW BVM3X30 (BLACK)
EAF	B3054120	TAPPING SCREW M4X12 (A TYP)
EAG	B3063060	TAPPING SCREW M3X6 (B TYP)
EGC	B3303060	BIND TAPPING SCREW M3X6(B TYPE)
E03	D1000300	STOP RING (E-3)
E04	D1000400	STOP RING (E-4)
E05	D1000500	STOP RING (E-5)
E07	D1000700	STOP RING (E-7)

REF.	ITEM #	DESCRIPTION
FAA	B3083080	COUNTER-SUNK HEAD TAPPING SCREW M3X8 (B TYP)
HAB	B4003040	TRIPLE SCREW M3X4
HAD	B4003050	TRIPLE SCREW M3X05
HAG	B4000080	TRIPLE SCREW M3X8
HAK	B4003060	TRIPLE SEREW M3X6
HAS	B4014080	TRIPLE SCREW M4X08
HAY	B4053060	TRIPLE TAP-TITE S SCREW M3X06
HBA	B4303050	TRIPLE SCREW M3X5 (BLACK)
HBB	B4303100	TRIPLE SCREW M3X10 (BLACK)
HBC	B4304060	TRIPLE SCREW M4X6 (BLACK)
HBE	B4304100	TRIPLE SCREW M4X10 (BLACK)
HBH	B4303060	TRIPLE SCREW M3X6 (BLACK)
HBI	B4303080	TRIPLE SCREW M3X8(BLACK)
HBO	B4304080	TRIPLE SCREW M4X8(BLACK)
HBR	B4303140	TRIPLE SCREW M3X14(BLACK)
HCB	B4103050	TRIPLE SCREW M3X05 (CHROMIUM)
HCD	B4103080	TRIPLE SCREW M3X08(CHROMIUM)
HDA	B4343060	TRIPLE TAP-TITE P SCREW M3X06(BLACK)
KAL	E0020100	SPRING PIN 2X10
KAK	E0020080	SPRING PIN 2X8
KAN	E0020140	SPRING PIN 2X14
KAO	E0020160	SPRING PIN 2X16
KAQ	E0020220	SPRING PIN 2X22
KKL	E0030150	SPRING PIN 3X15
RDF	D4000600	STOP RING CSTW-6
RGQ	D6211700	INVERTED RING ISTW-17
WAC	C2004100	PLAIN WASHER PWM4
XCC	C2892950	SHIM 6.2-0.5T
XDG	C2895140	SHIM 8.2X0.8T
XEC	C2895950	SHIM 6.2-1.0T

MITA EUROPE B.V.
Hoeksteen 40, 2132 MS Hoofddorp,
The Netherlands
Phone: (020) 6540000
Home page: http://www.mita.nl,
Email: info@mita. nl

MITA NEDERLAND B.V.
Gyroscoopweg 122, 1042 AZ Amsterdam,
The Netherlands
Phone: (020) 5877200

MITA COPYSTAR (U.K.) LTD.
Mita House, Hamm Moor Lane,
Addlestone, Weybridge,
Surrey KT15 2SB, U.K.
Phone: (01932) 858266

MITA ITALIA S.P.A.
Via Marconi 8, 20041 Agrate Brianza,
Milano,Italy
Phone: (039) 65641

S.A. MITA BELGIUM N.V.
Hermesstraat 8A, 1930 Zaventem, Belgium
Phone: (02) 7209270

MITA FRANCE S.A.R.L.
1 Rue Pelloutier,
77183 Croissy Beaubourg, France
Phone: (1) 60175152

MITA ESPAÑA S.A.
Edificio Mita, Avda. De Manacor Nº 2,
Urb. Parque Rozas, Apartado De Correos 76,
28230 Las Rozas, Madrid, Spain
Phone: 91-631-8392

MITA FINLAND OY
Kirvesmiehenkatu 4, 00810 Helsinki,
Finland
Phone: (09) 478 05200

MITA (SCHWEIZ) AG
Hölzliwisen Industriestrasse 28,
8604 Volketswil, Switzerland
Phone: (01) 9461600

MITA DEUTSCHLAND GMBH
Industriestrasse 17, D-61449 Steinbach/TS,
Germany
Phone: (06171) 7005-0

MITA GMBH AUSTRIA
Altmannsdorfer Straße 144-146,
1232 Wien, Austria
Phone: (01) 80188

MITA SVENSKA AB
Siktgatan 2
162 50 Vällingby, Sweden
Phone: (08) 4719999

MITA DANMARK A/S
Industrivej 11, DK-4632 Bjæverskov,
Denmark
Phone: 53671100

MITA PORTUGAL LDA.
CASCAISTOCK-Armazem nº8,
Rua das Fisgas, Alcoitão,
2765 Estoril, Portugal
Phone: 1-4602221

MITA COPYSTAR AMERICA, INC.
Headquarters:
225 Sand Road, P.O. Box 40008
Fairfield, New Jersey 07004-0008
U.S.A.
Phone: (201) 808-8444

MITA ASIA PACIFIC
Head office:
2-28, 1-chome, Tamatsukuri, Chuo-ku,
Osaka 540-8585, Japan
Phone: (06) 764-3555

MITA COPIERS AUSTRALIA PTY. LTD.
P.O. Box 211, Regents Park Estate Unit 2, Block V
391 Park Road, Regents Park N.S.W. 2143,Australia
Phone: 61-2-9645-5100
Fax: 61-2-9743-7485

MITA NEW ZEALAND LTD.
1-3 Parkhead Place, Albany
P.O. Box 364,New Zealand
Auckland, New Zealand
Phone: (09) 415-4517

MITA (THAILAND) CORPORATION LTD.
9/209 Ratchada-Prachacheun Road,
Bang Sue, Bangkok 10800, Thailand
Phone: (02) 586-0333

MITA COPYSTAR SINGAPORE PTE LTD.
121 Genting Lane, 3rd. Level,
Singapore 349572
Phone: 65-7418733

MITA COPYSTAR HONG KONG LIMITED.
11/F., Mita Centre,
552-566 Castle Peak Road,
Tsuen Wan, New Territories,
Hong Kong
Phone: 852-2423-2163

MITA INDUSTRIAL CO., LTD.
2-28, 1-chome, Tamatsukuri, Chuo-ku,
Osaka 540-8585, Japan
Phone: (06) 764-3555
Fax: (06) 764-3981

© 1998 MITA INDUSTRIAL CO., LTD.

MITA and *mita* are registered trademarks of MITA INDUSTRIAL CO., LTD.

Printed in Holland