mita®

Point**Source** Vi 310
Point**Source** Vi 230

PARTS LIST

Published in Aug.'99
842AR121
Revision 1

NOTE

1. Indicate parts number and machine model when placing an order.

eg.	Parts Number	Parts Name	Machine Model	Cycle	Quantity
	2AR04400	FRONT COVER (EUR)	Vi 310	50Hz	1

2. Service calls and freight will be charged separately.

3. Symbols in the "Parts Number" column.

- Parts with "•" are component parts or sub-assemblies of the assembly appearing immediately above them.

eg.	Parts Number	Parts Name	Parts Number	Parts Name
	2AR00140	CASSETTE ASS'Y	•J0463080	PLUG, QR/P15-8S-C(HIROSE)
			•2AR05150	LABEL, CASSETE OPERATION

- Parts with "••" are component parts or the sub-assembly with "•" appearing immediately above them.

eg.	Parts Number	Parts Name	Parts Number	Parts Name
	•2AR27260	*WIRE,FIXING UNIT*	*••J0149080*	*CONNECTOR,HOLDER,175133-8(AMP)*
			••J0150040	*RECEPTACLE,175778-4(AMP)*

- Parts with "◉" indicates the service parts.

4. See the last page of this parts list for the classification of the screws in the illustrations.

Parts List

PointSource Vi 310
PointSource Vi 230

CONTENTS

FIG.1 EXTERIOR COVERS · 2
FIG.2 FRAMES · 4
FIG.3 CASSETTE · 6
FIG.4 PAPER FEED-IN SECTION I · · · · · · · · · · · · · · · · · 8
FIG.5 PAPER FEED-IN SECTION II · · · · · · · · · · · · · · · · · 10
FIG.6 PAPER FEED-IN SECTION III · · · · · · · · · · · · · · · · 12
FIG.7 PAPER CONVEYING SECTION · · · · · · · · · · · · · · · · 14
FIG.8 OPTICAL SECTION I · 16
FIG.9 OPTICAL SECTION II · 18
FIG.10 LASER SCANER UNIT · 20
FIG.11 DEVELOPING SECTION I · · · · · · · · · · · · · · · · · · · 22
FIG.12 DEVELOPING SECTION II · · · · · · · · · · · · · · · · · · · 26
FIG.13 FIXING SECTION · 28
FIG.14 DRIVING, COOLING SECTION I · · · · · · · · · · · · · · 30
FIG.15 DRIVING, COOLING SECTION II (Vi 310) · · · · · · *32*
FIG.16 ELECTRICAL COMPONENTS I · · · · · · · · · · · · · · · 34
FIG.17 ELECTRICAL COMPONENTS II · · · · · · · · · · · · · · · 38
FIG.18 ELECTRICAL COMPONENTS III · · · · · · · · · · · · · · 40
FIG.19 ELECTRICAL COMPONENTS IV · · · · · · · · · · · · · · · 42
FIG.20 OPTION I · 44
FIG.21 OPTION II · 46
FIG.22 DRIVING, COOLING SECTION II (Vi 230) · · · · · · *48*
FIG.23 TOOLS · *50*
FIG.24 PACKAGING · *52*
• INDEX · *54*

FIG. 1 EXTERIOR COVERS

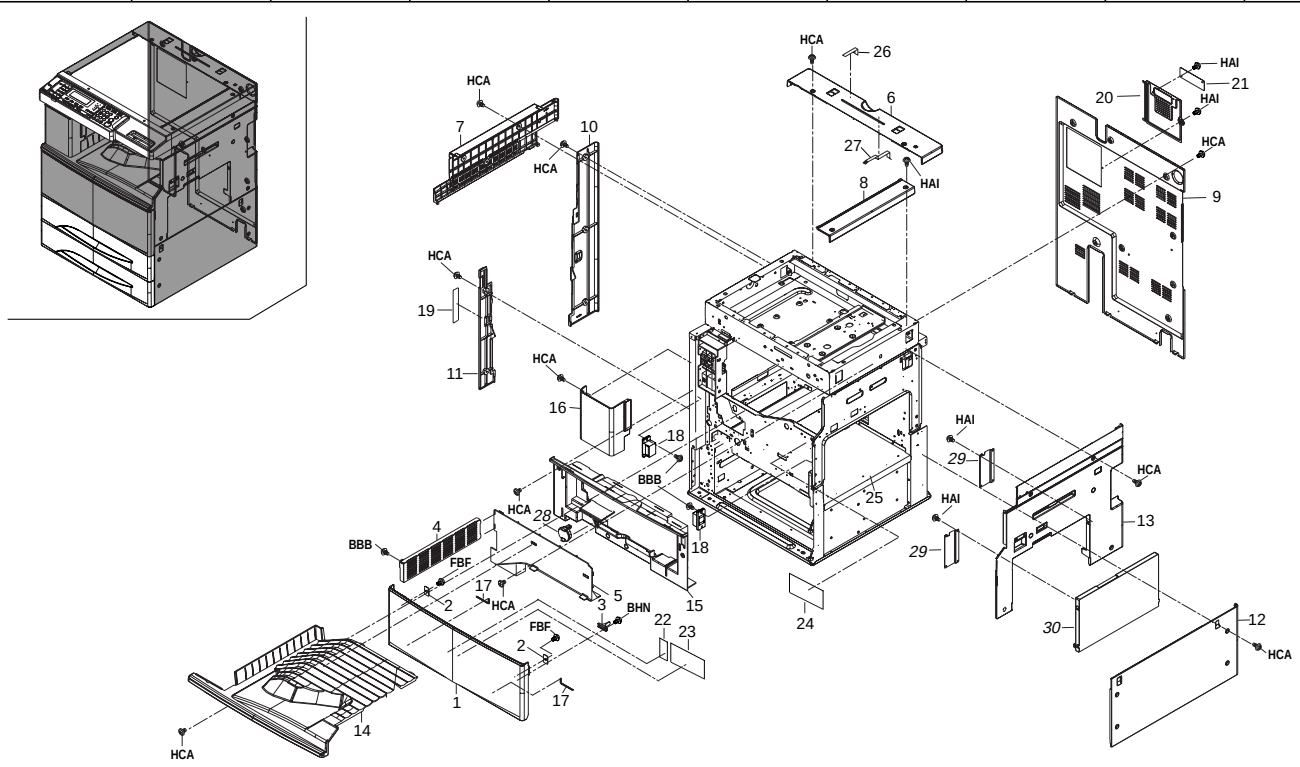

FIG. 1 EXTERIOR COVERS

SP	Ref. No.	Part. No.	Description	Quantity 230V	Quantity 240V
◉	*1*	*2AR04400*	*FRONT COVER(EUR) (Vi 310 EXCLUSIVE)*	*1*	*1*
◉	*1*	*2AS04020*	*FRONT COVER(EUR) (Vi 230 EXCLUSIVE)*	*1*	*1*
	2	49628105	RECEIVER,MAGNET	2	2
	3	65904230	HOLDER,SAFETY SWITCH	1	1
◉	4	2AR04190	UPPER COVER,EJECT	1	1
◉	5	2AR04140	REAR COVER TRAY	1	1
◉	6	2AR04120	REAR COVER,PLATEN	1	1
◉	7	2AR04110	LEFT COVER,PLATEN	1	1
◉	8	2AR04100	RIGHT COVER,PLATEN	1	1
◉	9	2AR04090	REAR COVER	1	1
◉	10	2AR04080	REAR LEFT COVER	1	1
◉	11	2AR04070	FRONT LEFT COVER	1	1
◉	12	2AR04060	LOWER RIGHT COVER	1	1
◉	13	2AR04050	UPPER RIGHT COVER	1	1
◉	14	2AR04010	TRAY,EJECT	1	1
◉	15	2AR04030	INNER COVER	1	1
◉	16	2AR04040	UPPER FRONT COVER	1	1
	17	33404220	FRONT PIN,COVER HINGE	2	2
	18	78802140	MAGNET EJECT SECTION	2	2
◉	19	2AR05110	LABEL,CONVEYING JAM	1	1
◉	20	2AR04550	LID PCB,FEED SHIFT	1	1
◉	21	2AR04560	LID,NCU	1	1
◉	22	2AR05170	LABEL,BYPASS JAM	1	1
◉	*23*	*2AR05191*	*LABEL,CARTRIDGE OPERATION*	*1*	*1*
	24	2AC05130	LABEL,SUPPLY(EUR)	1	1
	25	2AR02040	REINFORCEMENT,MIDDLE	1	1
	26	2AR26380	GROUND PLATE,DF	1	
	27	2AR26390	REAR GROUND PLATE,COVER	1	
◉	*28*	*2AR04590*	*LID,BYPASS DIAL (Vi 230 EXCLUSIVE)*	*1*	*1*
	29	*2AR04580*	*MOUNT,UPPER RIGHT COVER (Vi 230 EXCLUSIVE)*	*2*	*2*
◉	*30*	*3A206260*	*COVER,BYPASS TRAY (Vi 230 EXCLUSIVE)*	*1*	*1*

• Parts with "•" are component parts or sub-assemblies of the assembly appearing immediately above them.
• Parts with "◉" indicates the Service parts.

• Parts with "• •" are component parts or sub-assembly with "•" appearing immediately above them.

FIG. 2 FRAMES

2AR-1/2AS

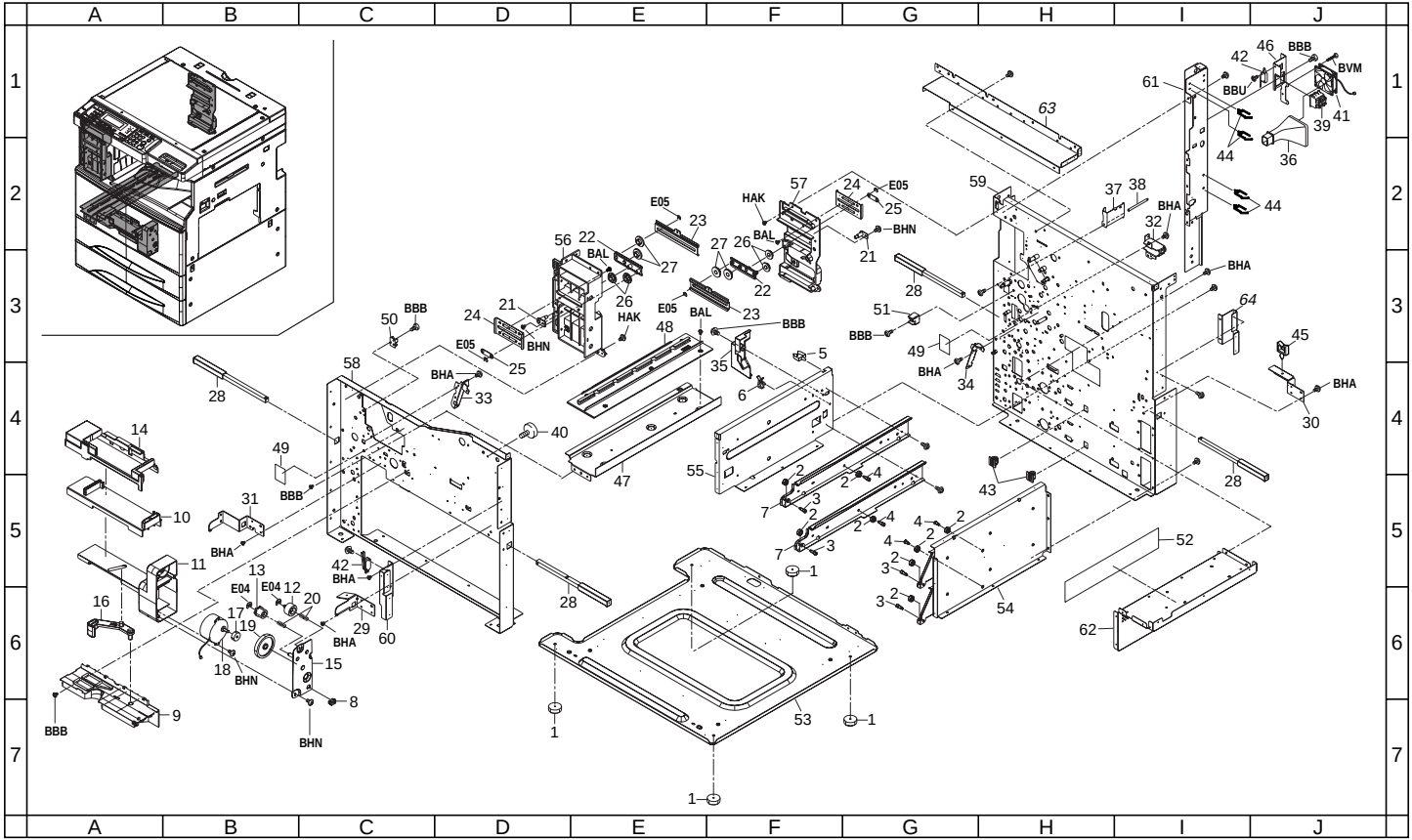

FIG. 2 FRAMES

SP	Ref. No.	Part. No.	Description	Quantity 230V	Quantity 240V
	1	2AR02180	BASE RUBBER	4	4
◉	2	2AR07800	PULLEY,CASSETTE RAIL	8	8
	3	2AR07810	FRONT PIN,CASSETTE RAIL	4	4
	4	2AR07820	REAR PIN,CASSETTE RAIL	4	4
	5	M2104350	EDGING,EDS-0607M(KITAGAWA)	1	1
	6	M2109330	WIRE SADDLE,YMC-10-0(KITAGAWA)	1	1
	7	2AR07140	LEFT RAIL,CASSETTE	2	2
	8	J0455020	CASE,DF3-2EP-2A(HIROSE)	1	1
	9	2AR15010	MOUNT BASE,CARTRIDGE	1	1
	10	2AR15020	MOVING BASE,CARTRIDGE	1	1
	11	2AR15030	MOVING BASE,CARTRIDGE DRIVE	1	1
◉	12	2AR15040	GEAR 21,TONER SUPPLY	1	1
◉	13	2AR15100	GEAR 16B,TONER SUPPLY	1	1
◉	14	2AR15060	COVER,CARTRIDGE MOUNT BASE	1	1
	15	2AR15070	MOUNT,CARTRIDGE DRIVE	1	1
	16	2AR15080	LEVER,CARTRIDGE MOVING	1	1
◉	17	45727502	GEAR,TONER MOTOR	1	1
◉	18	33915190	TONER MOTOR	1	1
◉	19	71821390	IDLE GEAR 48	1	1
◉	20	73818100	SPRING, BLADE THRUST	2	2
	21	2AR04270	LEFT FULCRUM PIN,MIDDLE COVER	2	2
	22	2AR21770	SLIDER A,FEED SHIFT	2	2
	23	2AR21780	SLIDER B,FEED SHIFT	2	2
	24	2AR21790	SUPPORT PLATE,FEED SHIFT SLIDER	2	2
	25	2AR21820	SPACER,FEED SHIFT SLIDER	2	2
	26	2AR21850	PULLEY A, FEED SHIFT SLIDER	4	4
	27	2AR21860	PULLEY B, FEED SHIFT SLIDER	4	4
	28	2AR02190	HANDLE,MACHINE	4	4
	29	2AR02200	FRONT RIGHT MOUNT,HANDLE	1	1
	30	2AR02210	REAR RIGHT MOUNT,HANDLE	1	1
	31	2AR02330	FRONT LEFT MOUNT,HANDLE	1	1
	32	2AR02340	REAR LEFT MOUNT,HANDLE	1	1
	33	2AR07400	FRONT MOUNT,PAPER FEED GUIDE	1	1
	34	2AR07410	REAR MOUNT,PAPER FEED GUIDE	1	1
	35	2AR07850	COVER,INTERLOCK SWITCH	1	1
	36	2AR16170	REAR DUCT,CONVEYING	1	1
	37	2AR26120	WORK PLATE,INTERLOCK SW	1	1
	38	2AR26140	SHAFT,INTERLOCK SW	1	1
◉	39	2AR27040	SWITCH,INTERLOCK	1	1
	40	18518380	RETAINING PIN,BLADE RELEASE	1	1
◉	41	34927100	FAN B,COOLING	1	1
◉	42	61727540	INTERLOCK SWITCH B	2	2
	43	77906291	HOLDER,CASSETTE STOPPER	2	2
	44	M7009020	WIRE SADDLE,LWS-1N-V0F(TAKEUCHI)	4	4
	45	M2509020	WIRE SADDLE,WS-2N	1	1
	46	2AR26110	MOUNT,INTERLOCK SW	1	1
◉	47	2AR09030	MOUNT BASE,RAIL	1	1
	48	2AR09050	RAIL,IMAGE FORMATION	1	1
	49	2AG05200	LABEL,HIGH VOLTAGE CAUTION(EXP)	2	2
	50	2AR17160	FRONT POSITIONING PLATE,TRANSFER ROLLER	1	1
	51	2AR17170	REAR POSITIONING PLATE,TRANSFER ROLLER	1	1
	52	2AR10100	FILTER,DUST SHIELD	1	1
	53	2AR02030	BASE	1	1
	54	2AR02050	LOWER RIGHT REINFORCEMENT	1	1
	55	2AR02060	LOWER LEFT REINFORCEMENT	1	1
	56	2AR02300	UPPER FRONT FRAME	1	1
	57	2AR02310	UPPER REAR FRAME	1	1
	58	2AR02010	FRONT FRAME	1	1
	59	2AR02020	REAR FRAME	1	1
	60	2AR02160	FRONT REINFORCEMENT,FRAME	1	1
	61	2AR02120	REAR LEFT REINFORCEMENT	1	1
	62	2AR02290	RIGHT REINFORCEMENT,MIDDLE	1	1
	63	*2AR02141*	*UPPER REAR REINFORCEMENT A*	*1*	*1*
	64	*2AR02170*	*REAR REINFORCEMENT,FRAME*	*1*	*1*

• Parts with "•" are component parts or sub-assemblies of the assembly appearing immediately above them.
• Parts with "◉" indicates the Service parts.

• Parts with "• •" are component parts or sub-assembly with "•" appearing immediately above them.

FIG. 3 CASSETTE

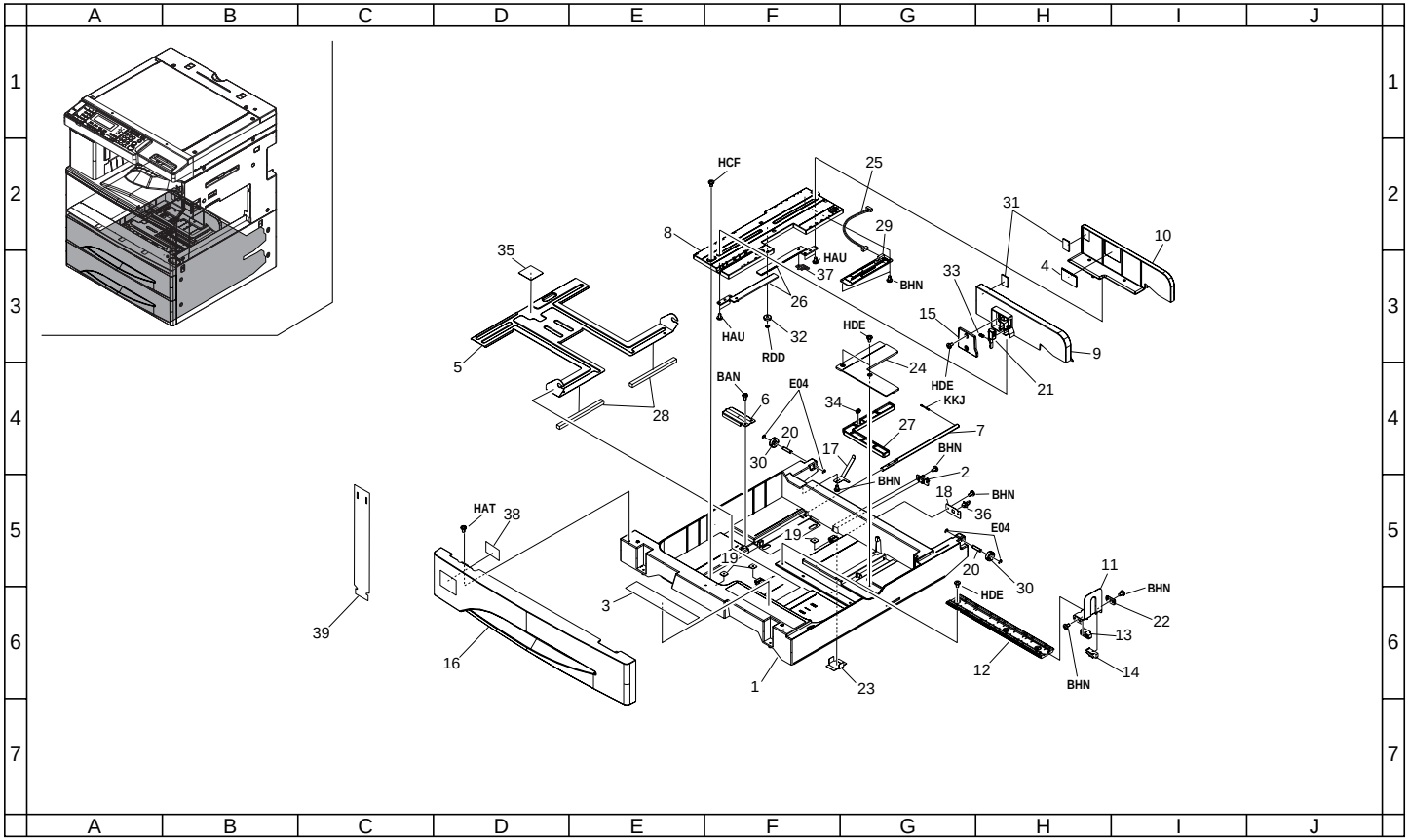

FIG. 3 CASSETTE

SP	Ref. No.	Part. No.	Description	Quantity 230V	Quantity 240V
		2AR00140	CASSETTE ASS'Y	2	2
	1	•2AR07010	CASSETTE	2	2
	2	•J0463080	PLUG,QR/P15-8S-C(HIROSE)	2	2
	3	•2AR05150	LABEL,CASSETTE OPERATION	2	2
	4	•2AR05200	LABEL,PAPER UPPER LIMIT	2	2
	5	•2AR07020	BASE,CASSETTE	2	2
	6	•2AR07030	WORK PLATE,CASSETTE BASE	2	2
	7	•2AR07040	SHAFT,WORK PLATE	2	2
	8	•2AR07050	RAIL A,CURSOR	2	2
	9	•2AR07060	CURSOR A,CASSETTE	2	2
	10	•2AR07070	CURSOR B,CASSETTE	2	2
	11	•2AR07080	CURSOR C,CASSETTE	2	2
	12	•2AR07090	RAIL C,CURSOR	2	2
	13	•2AR07100	FRONT GUIDE C,CURSOR	2	2
	14	•2AR07110	REAR GUIDE C,CURSOR	2	2
	15	•2AR07120	LID A,CURSOR	2	2
◉	16	•2AR07130	COVER,CASSETTE	2	2
◉	17	•2AR07150	GROUND PLATE,CASSETTE	2	2
	18	•2AR07160	MOUNT,CASSETTE STOPPER	2	2
	19	•2AR07180	RETAINER M4	6	6
	20	•2AR07190	SHAFT,CASSETTE PULLEY	4	4
	21	•2AR07340	LEVER A,CURSOR	2	2
	22	•2AR07610	STOPPER,TRAILING EDGE DETECTION	2	2
	23	•2AR07620	PROTECTING PLATE,CASSETTE WIRE	2	2
	24	•2AR07630	LID,TRAILING EDGE DETECTION PLATE	2	2
	25	•2AR27220	WIRE,CASSETTE UNIT	2	2
◉	26	•33907100	RACK,CASSETTE	4	4
	27	•33907170	DETECTION PLATE,PAPER SIZE	2	2
◉	28	•33907210	CUSHION,CASSETTE WORK PLATE	4	4
◉	29	•33928111	SIZE DETECTION PCB	2	2
◉	30	•34907150	PULLEY,CASSETTE	4	4
◉	31	•60907170	CUSHION,CASSETTE R	4	4
◉	32	•65914120	GEAR 18,IDLE DEVELOPING	2	2
◉	33	•66007120	SPRING,CURSOR C	2	2
◉	34	•66106080	SPRING,PAD	2	2
◉	35	•66107100	PAD,CASSETTE	2	2
	36	•77906210	CASSETTE STOPPER	2	2
	37	•33907110	TERMINAL,PAPER SIZE PCB	2	2
	38	•2AR07860	SPONGE,COVER CASSETTE	2	2
	39	2AR05210	SHEET,CASSETTE SIZE INDICATION	2	2

• Parts with "•" are component parts or sub-assemblies of the assembly appearing immediately above them.
• Parts with "◉" indicates the Service parts.

• Parts with "• •" are component parts or sub-assembly with "•" appearing immediately above them.

FIG. 4 PAPER FEED-IN SECTION I

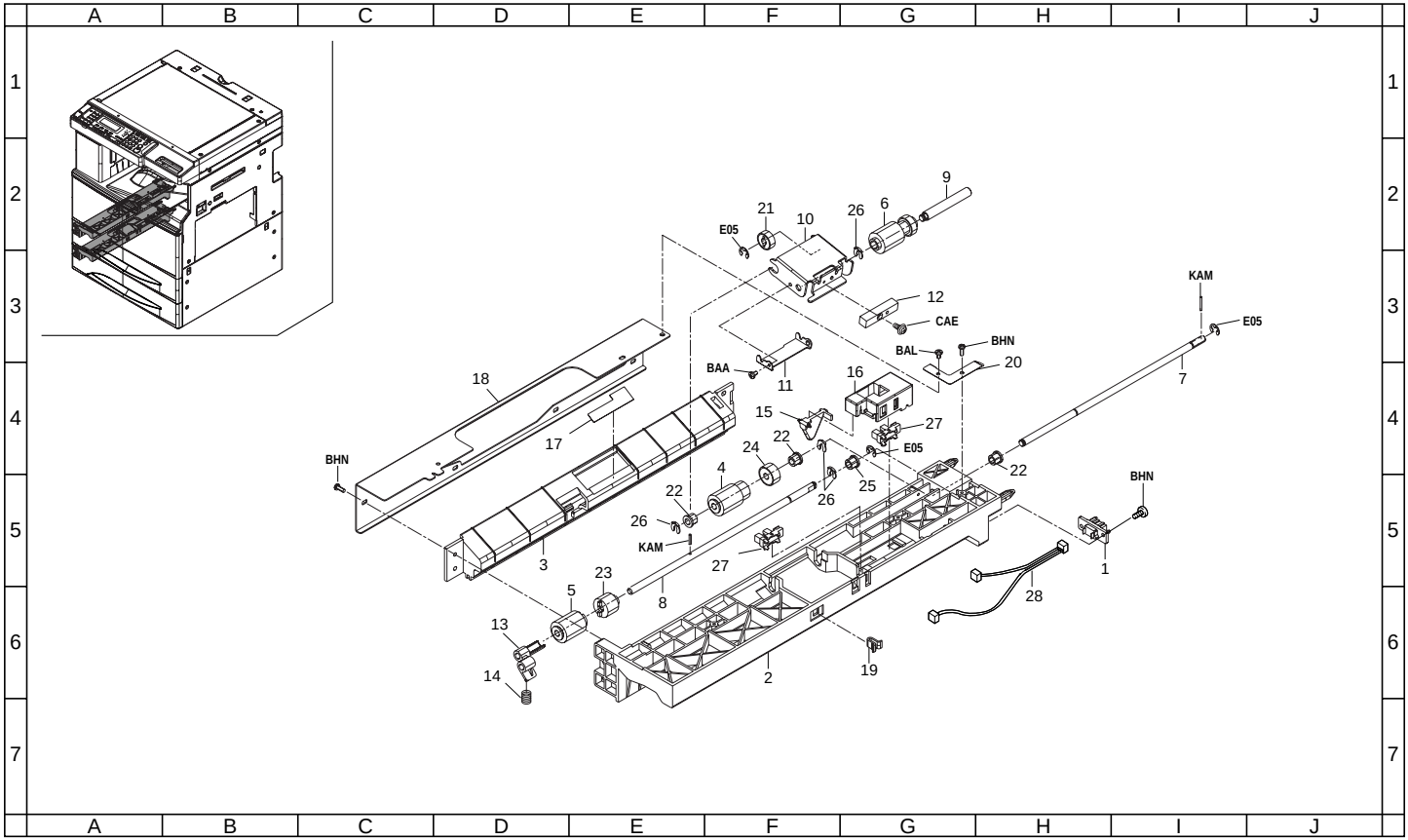

FIG. 4 PAPER FEED-IN SECTION I

SP	Ref. No.	Part. No.	Description	Quantity 230V	Quantity 240V
	1	J0463080	PLUG,QR/P15-8S-C(HIROSE)	2	2
	2	2AR07200	UPPER HOUSING,PAPER FEED	2	2
	3	2AR07210	LOWER HOUSING,PAPER FEED	2	2
◉	4	2AR07220	PULLEY,PAPER FEED	2	2
◉	5	2AR07230	PULLEY,SEPARATION	2	2
◉	6	2AR07240	PULLEY,LEADING FEED	2	2
	7	2AR07250	SHAFT,PAPER FEED	2	2
	8	2AR07260	SHAFT,SEPARATION	2	2
	9	2AR07270	SHAFT,LEADING FEED	2	2
	10	2AR07280	SUPPORT PLATE,LEADING FEED PULLEY	2	2
	11	2AR07290	REINFORCEMENT,LEADING FEED SUPPORT PLATE	2	2
	12	2AR07300	WEIGHT,LEADING FEED PULLEY	2	2
	13	2AR07310	LEVER,SEPARATION PULLEY RELEASE	2	2
◉	14	2AR07350	SPRING,SEPARATION PULLEY	2	2
	15	2AR07640	ACTUATOR,PAPER EMPTY	2	2
	16	2AR07650	HOLDER,ACTUATOR	2	2
	17	2AR07660	GUIDE FILM,SEPARATION PULLEY	2	2
	18	2AR07670	REINFORCEMENT,PRIMARY PAPER FEED	2	2
	19	2AR07690	STOPPER,SUPPORT PLATE	2	2
◉	20	2AR07790	GROUND PLATE,PRIMARY PAPER FEED	2	2
◉	21	45729206	GEAR,TONER FEED ROLLER	2	2
◉	22	29806810	BUSHING,6 REGISTRATION	6	6
◉	23	33906070	TORQUE LIMITER,PAPER FEED	2	2
◉	24	33906160	GEAR 16,PAPER FEED	2	2
◉	25	34806040	LOWER BUSHING,PAPER FEED	2	2
◉	26	34806140	STOPPER 4	8	8
◉	27	35327400	SWITCH,FEED	4	4
	28	2AR27430	WIRE,PRIMARY PAPER FEED UNIT	2	2

• Parts with "•" are component parts or sub-assemblies of the assembly appearing immediately above them.
• Parts with "◉" indicates the Service parts.

• Parts with "• •" are component parts or sub-assembly with "•" appearing immediately above them.

FIG. 5 PAPER FEED-IN SECTION II

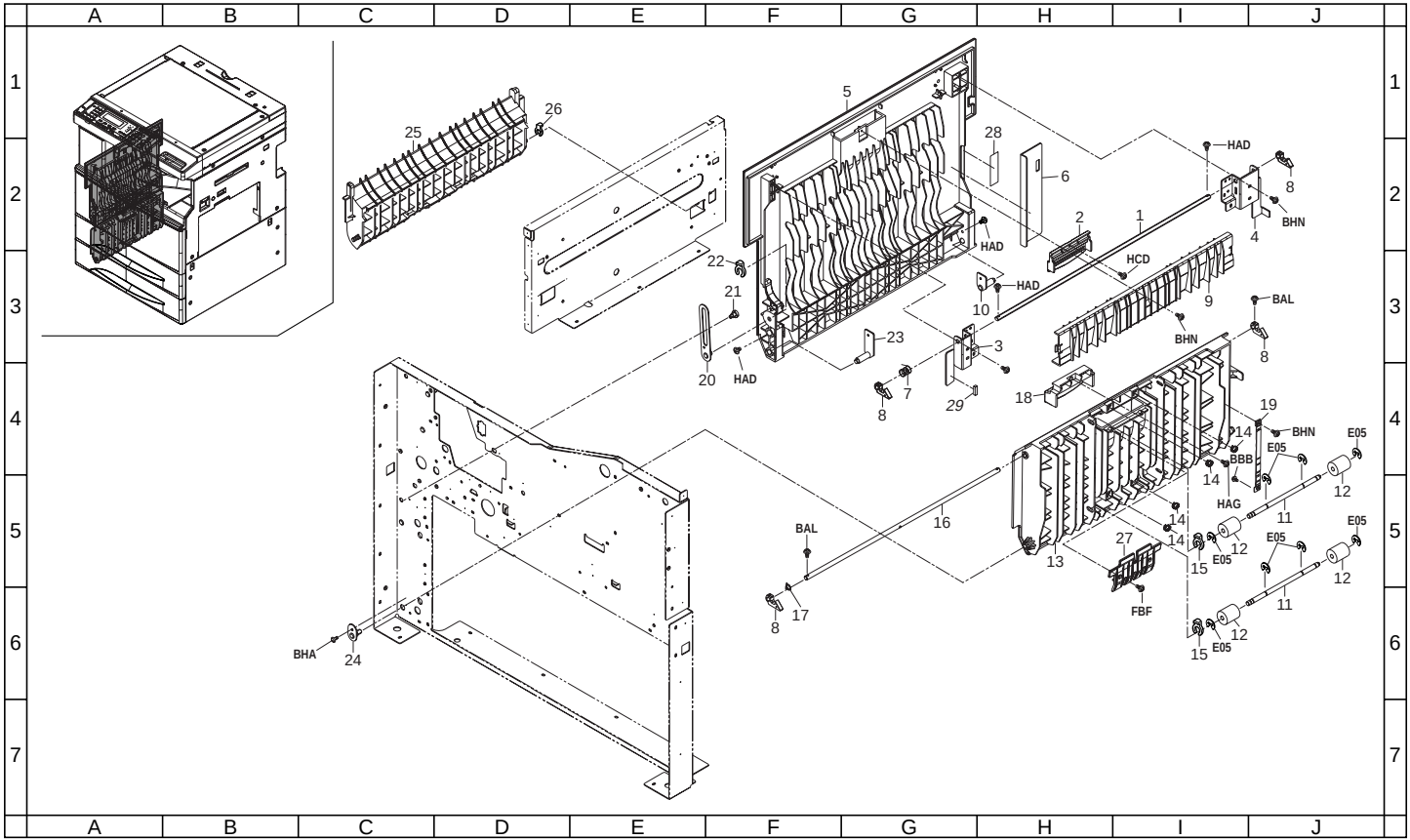

FIG. 5 PAPER FEED-IN SECTION II

SP	Ref. No.	Part. No.	Description	Quantity 230V	Quantity 240V
	1	2AR04220	LEFT SHAFT,MIDDLE COVER	1	1
	2	2AR04320	LEFT HANDLE,MIDDLE COVER	1	1
	3	2AR04301	FRONT SUPPORT PLATE,HOOK	1	1
	4	2AR04310	REAR SUPPORT PLATE,HOOK	1	1
◉	5	2AR04200	LEFT COVER,MIDDLE	1	1
	6	2AR04350	SUPPORT PLATE,LEFT MIDDLE COVER	1	1
◉	7	2AR04340	LEFT SPRING,MIDDLE COVER	1	1
	8	33906670	RIGHT HOOK,FEED RELEASE	4	4
◉	9	2AR21750	LEFT GUIDE,MIDDLE COVER	1	1
	10	2AR04290	REAR FULCRUM PLATE,LEFT MIDDLE COVER	1	1
	11	34806181	SHAFT,VERTICAL CONVEYING	2	2
◉	12	33906660	RIGHT PULLEY,FEED	4	4
◉	13	2AR07520	COVER,VERTICAL CONVEYING	1	1
◉	14	66106610	SPRING,FEED	4	4
◉	15	34806140	STOPPER 4	2	2
	16	2AR07600	SHAFT,VERTICAL CONVEYING	1	1
	17	33906640	RIGHT SPRING,FEED RELEASE	1	1
	18	33906680	RIGHT HANDLE,FEED RELEASE	1	1
	19	35302470	STRAP A,MACHINE RELEASE	1	1
	20	2AR04260	LEFT SUPPORT PLATE,MIDDLE COVER	1	1
	21	72518120	PIN,TANK RELEASE	1	1
	22	33906630	STOPPER 5,RING	1	1
	23	2AR04210	FRONT FULCRUM PLATE,LEFT MIDDLE COVER	1	1
	24	2AR07540	RETAINING PIN,VERTICAL CONVEYING	1	1
	25	2AR07470	LOWER LEFT GUIDE,VERTICAL CONVEYING	1	1
◉	26	34806150	STOPPER 5	1	1
	27	2AR07590	GUIDE,VERTICAL CONVEYING	1	1
	28	2AR05180	LABEL,HIGH TEMPERATURE CAUTION	1	1
	29	*2AC26310*	*SHIELD 10X8X20,GASKET*	*1*	

• Parts with "•" are component parts or sub-assemblies of the assembly appearing immediately above them.
• Parts with "◉" indicates the Service parts.

• Parts with "• •" are component parts or sub-assembly with "•" appearing immediately above them.

FIG. 6 PAPER FEED-IN SECTION III

2AR-1/2AS

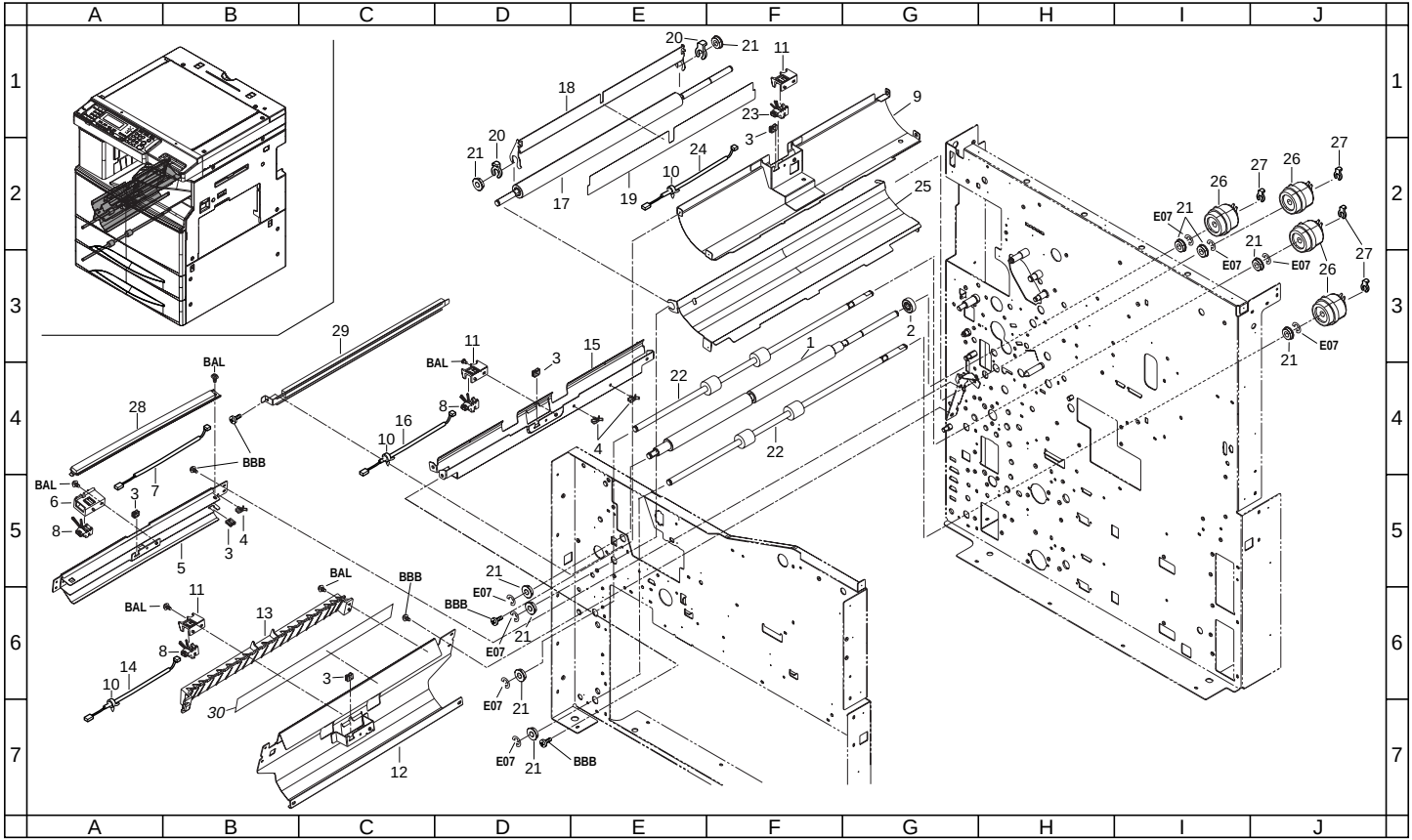

FIG. 6 PAPER FEED-IN SECTION III

SP	Ref. No.	Part. No.	Description	Quantity 230V	Quantity 240V
◉	1	2AR06500	RIGHT ROLLER,RESISTANCE	1	1
◉	2	71815110	IDLE GEAR 18,SUB UNIT	1	1
	3	M2104350	EDGING,EDS-0607M(KITAGAWA)	5	5
	4	M2109330	WIRE SADDLE,YMC-10-0(KITAGAWA)	3	3
	5	2AR07430	LOWER GUIDE,FEED	1	1
	6	2AR07730	HOLDER,SWITCH	1	1
	7	2AR27560	JUNCTION WIRING 1,FEED SWITCH	1	1
◉	8	33906140	SWITCH,VERTICAL CONVEYING	3	3
	9	2AR06020	UPPERGUIDE BYPASSFEED	1	1
	10	M2107120	BINDING BAND SG-130	3	3
	11	2AR06070	MOUNT,REGISTRATION SW	3	3
	12	2AR07440	LEFT GUIDE,VERTICAL CONVEYING	1	1
	13	2AR07830	UPPER GUIDE,VERTICAL CONVEYING	1	1
	14	2AR27550	JUNCTION WIRING 2,FEED SWITCH	1	1
	15	2AR07840	GUIDE,DESK CONVEYING	1	1
	16	2AR27540	JUNCTION WIRING 3,FEED SWITCH	1	1
◉	17	2AR06030	RIGHT ROLLER,FEED	1	1
	18	2AR06250	GUIDE,FEED	1	1
◉	19	2AR06380	FILM,FEED GUIDE	1	1
	20	34806480	STOPPER 6	2	2
◉	21	67322230	BUSHING 8	10	10
◉	22	2AR07420	ROLLER,VERTICAL CONVEYING	2	2
◉	23	2AR27090	SWITCH,REGISTRATION	1	1
	24	2AR27380	JUNCTION WIRING,RESISTANCE SWITCH	1	1
	25	2AR06010	LOWERGUIDE BYPASSFEED	1	1
◉	26	2AC06230	CLUTCH,RESISTANCE	4	4
◉	27	34806150	STOPPER 5	4	4
◉	28	2AR68090	RIGHT CLEANER FEED ASS'Y	1	1
◉	29	2AR00130	RIGHT CLEANER RESISTANCE ASS'Y	1	1
	30	*2AR07870*	*FILM,VERTICAL CONVEYING*	*1*	*1*

• Parts with "•" are component parts or sub-assemblies of the assembly appearing immediately above them.
• Parts with "◉" indicates the Service parts.

• Parts with "• •" are component parts or sub-assembly with "•" appearing immediately above them.

FIG. 7 PAPER CONVEYING SECTION

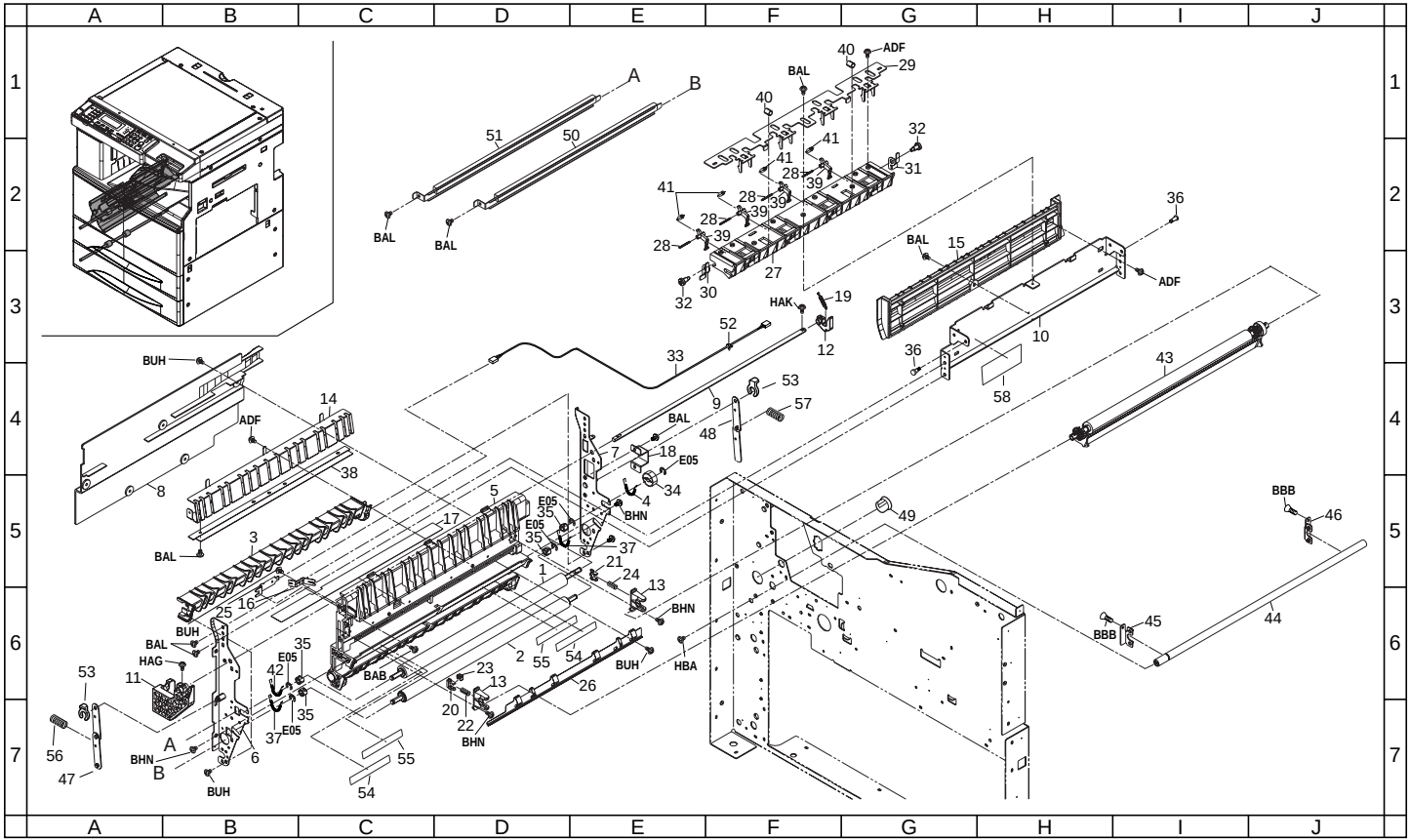

FIG. 7 PAPER CONVEYING SECTION

SP	Ref. No.	Part. No.	Description	Quantity 230V	Quantity 240V
◉	1	2AR06510	LEFT ROLLER,RESISTANCE	1	1
◉	2	2AR06520	LEFT ROLLER,FEED	1	1
	3	2AR06550	GUIDE,DUPLEX CONFLUENCE	1	1
◉	4	2AR06580	SPRING,PRESSING RESISTANCE	1	1
	5	2AR16010	BASE,CONVEYING	1	1
	6	2AR16020	FRONT FRAME,CONVEYING	1	1
	7	2AR16030	REAR FRAME,CONVEYING	1	1
	8	2AR16050	COVER,CONVEYING	1	1
	9	2AR16060	SHAFT,CONVEYING HOOK	1	1
	10	2AR16070	STAY,CONVEYING	1	1
	11	2AR16080	HANDLE,CONVEYING RELEASE	1	1
	12	2AR16090	HOOK,CONVEYING	1	1
	13	2AR16130	MOUNT BASE,TRANSFER ROLLER BUSHING	2	2
	14	2AR16150	STATIC ELIMINATION PLATE,CONVEYING	1	1
	15	2AR16220	GUIDE,DUPLEX CONVEYING	1	1
◉	16	2AR16250	GROUND PLATE,CONVEYING	1	1
◉	17	2AR16260	LEFT SHEET,FEED ROLLER	1	1
	18	2AR16300	REAR REINFORCEMENT , CONVEYING FRAME	1	1
◉	19	2AR16330	SPRING,CONVEYING HOOK	1	1
◉	20	2AR17030	FRONT BUSHING,TRANSFER ROLLER PRESSURE	1	1
◉	21	2AR17040	REAR BUSHING,TRANSFER ROLLER PRESSURE	1	1
◉	22	2AR17060	FRONT SPRING,TRANSFER ROLLER	1	1
◉	23	2AR17070	TERMINAL,TRANSFER PRESSURE	1	1
◉	24	2AR17110	REAR SPRING,TRANSFER ROLLER	1	1
◉	25	2AR17130	TERMINAL,TRANSFER	1	1
	26	2AR17180	FRONT HOLDER,TRANSFER GUIDE	1	1
	27	2AR20100	LEFT REAR GUIDE,FIXING	1	1
	28	2AR20510	SHAFT,PRESSURE ROLLER SEPARATION CLAW	4	4
	29	2AR20520	MOVING PLATE,SEPARATION CLAW RELEASE	1	1
	30	2AR20530	FRONT LEVER,SEPARATION CLAW RELEASE	1	1
	31	2AR20540	REAR LEVER,SEPARATION CLAW RELEASE	1	1
	32	2AR20550	FULCRUM PIN,SEPARATION CLAW RELEASE	2	2
	33	2AR27360	WIRE,TRANSFER HIGH VOLTAGE	1	1
◉	34	45727501	GEAR,TONER FEED ROLLER	1	1
◉	35	28801300	BUSING, PAPER FEED	4	4
◉	36	48128807	PIN,FRAME	2	2
◉	37	29717220	PRESSING SPRING B,SB	2	2
◉	38	34821100	STATIC ELIMINATOR,EJECT	1	1
◉	39	36720493	CLAW,PRESS ROLLER	4	4
◉	40	65009050	SPRING,DEVELOPING ROCK	2	2
◉	41	68320310	SPRING,SEPARATION CLAW	4	4
◉	42	77706492	FRONT PRESSING SPRING	1	1
◉	43	2AR00320	TRANSFER ROLLER ASS'Y	1	1
	44	2AR16040	SHAFT,CONVEYING FULCRUM	1	1
	45	2AR16230	FRONT RETAINER,CONVEYING FULCRUM	1	1
	46	2AR16240	REAR RETAINER,CONVEYING FULCRUM	1	1
	47	2AR16280	FRONT ARM,CONVEYING	1	1
	48	2AR16290	REAR ARM,CONVEYING	1	1
	49	M1203230	OPEN BUSHING,OCB-750	1	1
◉	50	2AR68100	LEFT CLEANER FEED ASS'Y	1	1
◉	51	2AR68080	LEFT CLEANER RESISTANCE ASS'Y	1	1
	52	M2107120	BINDING BAND SG-130	1	1
◉	53	34806140	STOPPER 4	2	2
	54	2AR16270	FILM A,RESISTANCE	2	2
	55	2AR16340	FILM B,RESISTANCE	2	2
◉	56	2AR16310	FRONT SPRING,ARM CONVEYING	1	1
◉	57	2AR16320	REAR SPRING,ARM CONVEYING	1	1
	58	29705100	CAUTION LABEL,DRUM	1	1

• Parts with "•" are component parts or sub-assemblies of the assembly appearing immediately above them.
• Parts with "◉" indicates the Service parts.

• Parts with "• •" are component parts or sub-assembly with "•" appearing immediately above them.

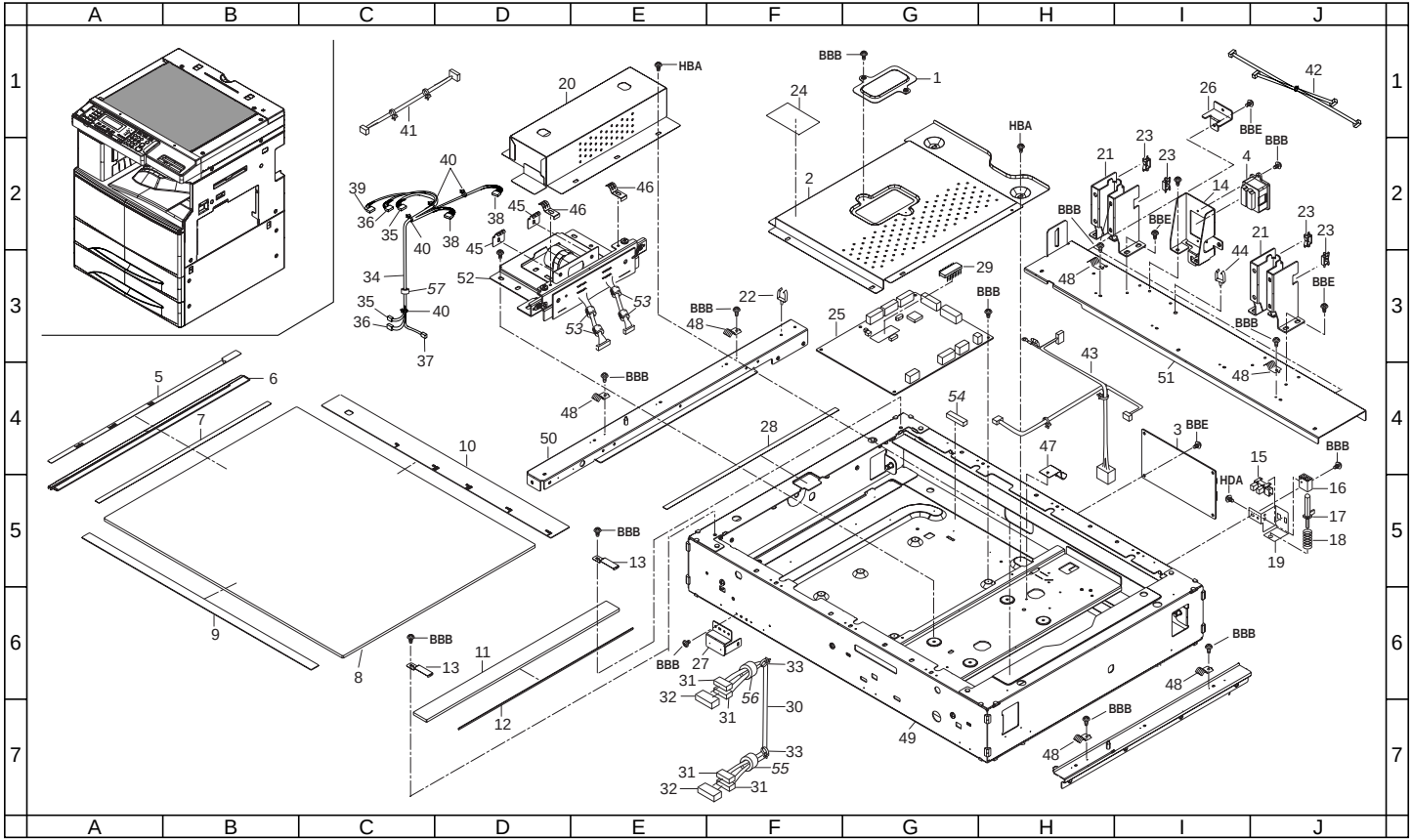
A B C D E F G H I J
1 2 3 4 5 6 7
HBA
BBB
BBE
HDA
1 2 3 4 5 6 7 8 9 10 11 12 13 14 15 16 17 18 19 20 21 22 23 24 25 26 27 28 29 30 31 32 33 34 35 36 37 38 39 40 41 42 43 44 45 46 47 48 49 50 51 52 53 54 55 56 57

FIG. 8 OPTICAL SECTION I

2AR-1/2AS

SP	Ref. No.	Part. No.	Description	Quantity 230V	Quantity 240V
	1	2AR12140	COVER SCANNER ROM	1	1
	2	2AR12070	COVER SCANNER PCB	1	1
◉	*3*	*2AR28152*	*SCANNER DRIVE PCB*	*1*	*1*
	4	J0388460	RECEPTACLE,52918-4615(MOLEX)	1	1
◉	5	35912450	LABEL,ORIGINAL SIZE INDICATOR (METRIC)	1	1
◉	6	2AB12230	LEFT ORIGINAL SIZE INDICATOR	1	1
◉	7	35912200	STANDARD PLATE,SHADING	1	1
◉	8	35912010	CONTACT GLASS	1	1
◉	9	35912490	FRONT ORIGINAL SIZE INDICATOR	1	1
◉	10	35912230	REAR ORIGINAL SIZE INDICATOR (METRIC)	1	1
◉	11	35911450	CONTACT GLASS,ADF	1	1
◉	12	35912531	SPONGE,ORIGINAL SIZE INDICATOR	1	1
	13	2AC12280	HOLDER,ADF CONTACT GLASS	2	2
	14	2AR12160	MOUNT,DF CONNECTOR	1	1
◉	15	35327400	SWITCH,FEED	1	1
	16	2AC12360	GUIDE,RELEASE SWITCH	1	1
◉	17	2AC12370	SWITCH,RELEASE DETECTION	1	1
◉	18	2AC12380	SPRING,RELEASE SWITCH	1	1
	19	2AC12230	MOUNT,RELEASE SWITCH	1	1
	20	2AR12540	COVER,ISU	1	1
	21	2AR12060	MOUNT BASE,DF HINGE	2	2
	22	M7009030	WIRE SADDLE,WS-4W(TAKEUCHI)	1	1
	23	M2104210	EDGING,EDS-2	4	4
	24	20305071	LABEL,CAUTION CONTACT GLASS	1	1
◉	25	2AR68411	PCB SCANNER ASS'Y SP	1	1
	26	2AR04570	REAR MOUNT,COVER	2	2
	27	2AR02320	UPPER FRONT MOUNT,FRAME	1	1
	28	2AR12210	FILM,GLASS DUST SHIELD	1	1
◉	*29*	*2AR68032*	*IC,ROM SCANNER SP*	*1*	*1*
	30	2AR27340	WIRE,SCANNER PCB	1	1
	31	•J0140120	RECEPTACLE,1-173977-2(AMP)	4	4
	32	•J0149240	CONNECTOR,HOLDER,2-175133-4(AMP)	2	2
	33	•M2607010	BINDING BAND,PLT1M	2	2
	34	*2AR27422*	*WIRE,SCANNER DRIVE PCB*	*1*	*1*
	35	•J0376120	RECEPTACLE,52484-1210(MOLEX)	2	2
	36	•J0376110	RECEPTACLE,52484-1110(MOLEX)	2	2
	37	•J0377120	RECEPTACLE,52484-1212(MOLEX)	1	1
	38	•J5013140	RECEPTACLE,14KR-6H-PC(JST)	2	2
	39	•J0376130	RECEPTACLE,52484-1310(MOLEX)	1	1
	40	•M2607010	BINDING BAND,PLT1M	4	4
	41	2AR27520	WIRE,SCANNER SWITCH	1	1
	42	2AR27470	WIRE,SCANNER MOTOR	1	1
	43	2AR27580	WIRE,SCANNER POWER SOURCE	1	1
	44	M2109330	WIRE SADDLE,YMC-10-0(KITAGAWA)	2	2
◉	45	2AR12550	GROUND PLATE,LENS MOUNT	2	1
◉	46	2AR12560	GROUND PLATE,CCD MOUNT	2	2
◉	47	2AR12580	GROUND PLATE,ISU MOUNT	1	1
	48	2AR26360	GROUND PLATE,SCANNER UNIT	6	6
	49	2AR00270	SCANNER FRAME ASS'Y	1	1
	50	2AR02130	UPPER LEFT REINFORCEMENT	1	1
	51	2AR02150	UPPER REAR REINFORCEMENT B	1	1
	52	*2AR68431*	*ISU,ASS'Y*	*1*	*1*
	53	65027470	CORE,7-15X18	*4*	*1*
	54	*18526360*	*SHIELD,GASKET ISU FRONT*	*1*	
	55	*2AR27720*	*CORE 8-18X13*	*1*	
	56	*2AR27730*	*CORE 10-20X10*	*1*	
	57	*65027480*	*CORE,9-20X32*	*1*	

• Parts with "•" are component parts or sub-assemblies of the assembly appearing immediately above them.
• Parts with "◉" indicates the Service parts.

• Parts with "• •" are component parts or sub-assembly with "•" appearing immediately above them.

FIG. 9 OPTICAL SECTION II

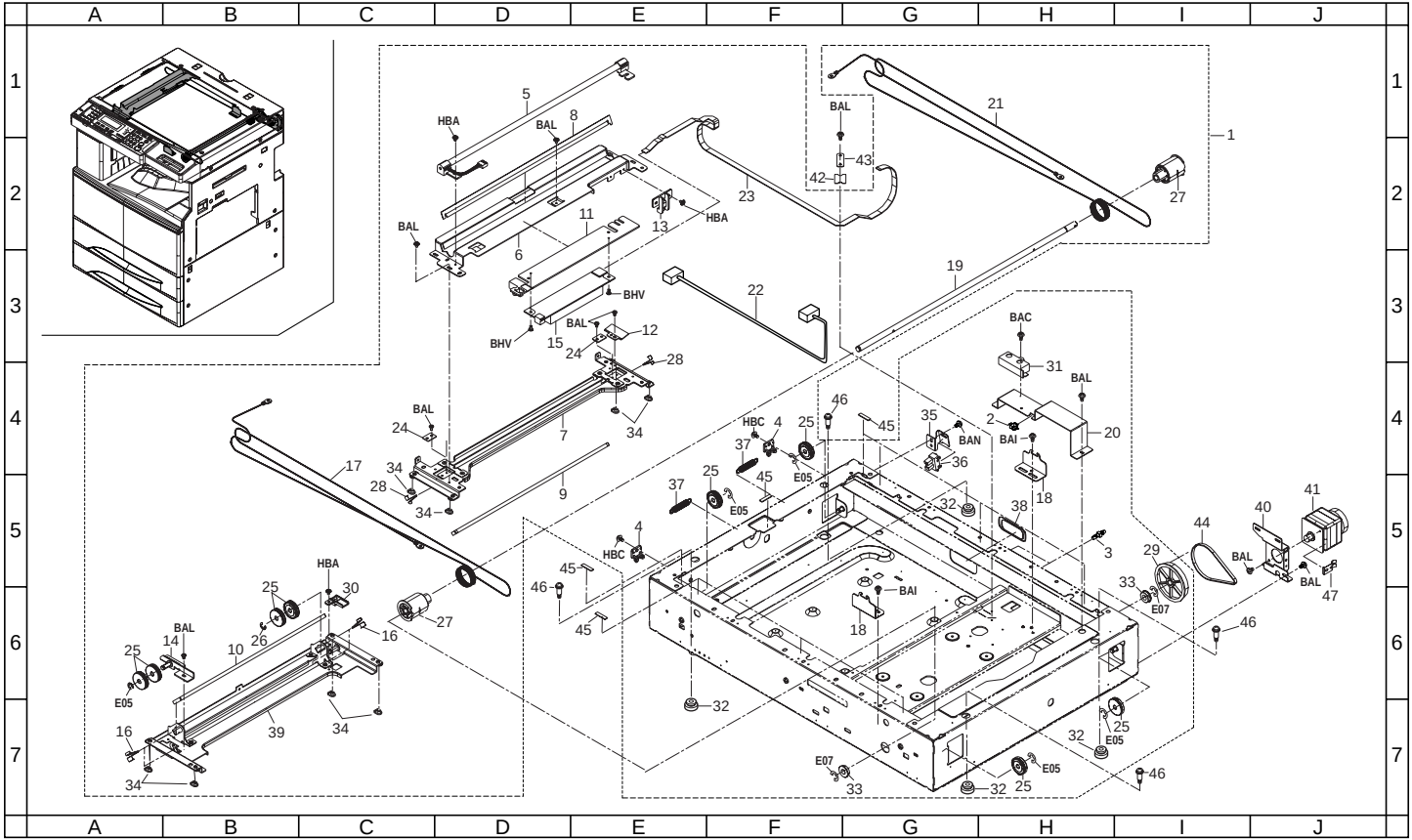

FIG. 9 OPTICAL SECTION II

SP	Ref. No.	Part. No.	Description	Quantity 230V	Quantity 240V
◉	1	2AR93030	PARTS,SCANNER UNIT ASS'Y(SP)	1	1
	2	•M2104350	EDGING,EDS-0607M(KITAGAWA)	1	1
	3	•M2108860	SPACER,PHD-10(KITAGAWA)	2	2
	4	•18512340	GUIDE,SCANNER WIRE	2	2
◉	5	•2AC12100	LAMP,SCANNER	1	1
	6	•2AC12110	UPPER MIRROR FRAME A,SCANNER	1	1
	7	•2AC12120	LOWER MIRROR FRAME A,SCANNER	1	1
	8	•2AC12130	REFLECTOR,SCANNER	1	1
	9	•2AC12140	MIRROR A	1	1
	10	•2AC12150	MIRROR B	1	1
	11	•2AC12240	COVER,INVERTER	1	1
	12	•2AC12260	LIGHT SHIELD,PI	1	1
	13	•2AC12270	GUIDE FFC1	1	1
	14	•2AC12400	ADJUSTING PLATE B,MIRROR FRAME	1	1
◉	15	•2AC28120	INVERTER PCB	1	1
◉	16	•75712080	MIRROR HOLDER	4	4
◉	17	•2AR12100	FRONT WIRE,SCANNER	1	1
	18	•2AR12110	ADJUSTING PLATE,SCANNER WIRE	2	2
	19	•2AR12120	SHAFT,SCANNER DRIVE	1	1
	20	•2AR12130	MOUNT,ORIGINAL DETECTION SENSOR	1	1
◉	21	•2AR12180	REAR WIRE,SCANNER	1	1
	22	•2AR27570	WIRE,ORIGINAL DETECTION SENSOR	1	1
	23	•2AR27650	WIRE,INVERTER	1	1
	24	•29912420	HOLDER,WIRE ROPE	2	2
◉	25	•33912150	PULLEY,WIRE	8	8
◉	26	•34806150	STOPPER 5	1	1
◉	27	•35912060	PULLEY,SCANNER DRUM	2	2
◉	28	•35912210	SPRING,MIRROR HOLDER	2	2
◉	29	•35912340	PULLEY,SCANNER DRIVE	1	1
	30	•35912360	GUIDE FFC2	1	1
◉	31	•35927290	SENSOR,ORIGINAL DETECTION	1	1
	32	•36512430	BASE RUBBER,SCANNER SECTION	4	4
◉	33	•60912270	BEARING,688ZZ	2	2
	34	•66012300	SLIDER,SCANNER	8	8
	35	•66212080	MOUNT,SCANNER SWITCH	1	1
◉	36	•72127100	PI SWITCH,OPTICAL SECTION	1	1
◉	37	•72112520	TENSION SPRING,SCANNER WIRE	2	2
	38	•72626210	BUSHING,24X54	1	1
	39	•2AC12160	MIRROR FRAME B	1	1
	40	2AR12150	MOUNT,SCANNER MOTOR	1	1
◉	41	2AR93280	PARTS,MOTOR SCANNER(S P)	1	1
◉	42	2AR12200	FILM,FFC	1	1
	43	2AC12300	HOLDER FFC	1	1
◉	44	35621150	BELT 224,FEED SHIFT DRIVE	1	1
	45	29812291	CUSHION,CONTACT GLASS	9	9
	46	76610320	PIN TENSION PULLEY	4	4
◉	47	2AR12570	GROUND PLATE,MOTOR MOUNT	1	1

• Parts with "•" are component parts or sub-assemblies of the assembly appearing immediately above them.
• Parts with "◉" indicates the Service parts.

• Parts with "• •" are component parts or sub-assembly with "•" appearing immediately above them.

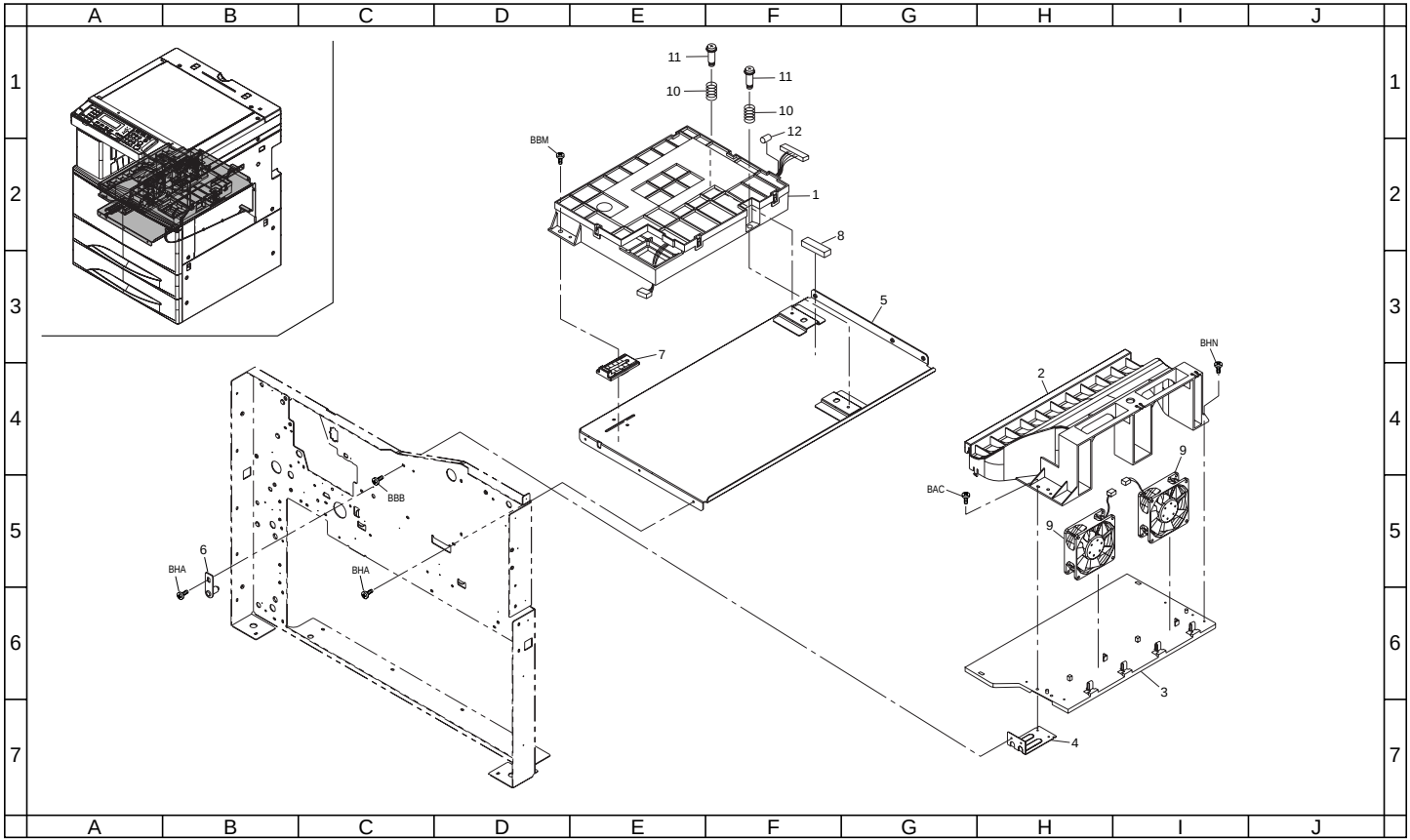
A
B
C
D
E
F
G
H
I
J
1
2
3
4
5
6
7
11
10
12
BBM
8
BBB
BHA
BAC
BHN
9

FIG. 10 LASER SCANER UNIT

SP	Ref. No.	Part. No.	Description	Quantity 230V	Quantity 240V
◉	1	2AR00620	LSU ASS'Y(EUR)	1	
◉	1	2AR00281	LSU ASS'Y		1
	2	2AR23010	DUCT A,COOLING	1	1
	3	2AR23020	DUCT B,COOLING	1	1
	4	2AR23040	MOUNT,COOLING DUCT	1	1
	5	2AR02240	MOUNT,LSU	1	1
	6	2AR02250	POSITIONING PLATE,LSU	1	1
	7	2AR02350	ADJUSTING BASE,LSU	1	1
	8	36527090	SHIELD 60,GASKET	1	
◉	9	34827250	FAN ND,COOLING	2	2
◉	10	61706750	SPRING,BYPASS GUIDE	2	2
	11	76610320	PIN TENSION PULLEY	2	2
	12	*65027480*	*CORE,9-20X32*	*1*	
	12	2AR27670	CORE 6-13X28		1

• Parts with "•" are component parts or sub-assemblies of the assembly appearing immediately above them.
• Parts with "◉" indicates the Service parts.

• Parts with "• •" are component parts or sub-assembly with "•" appearing immediately above them.

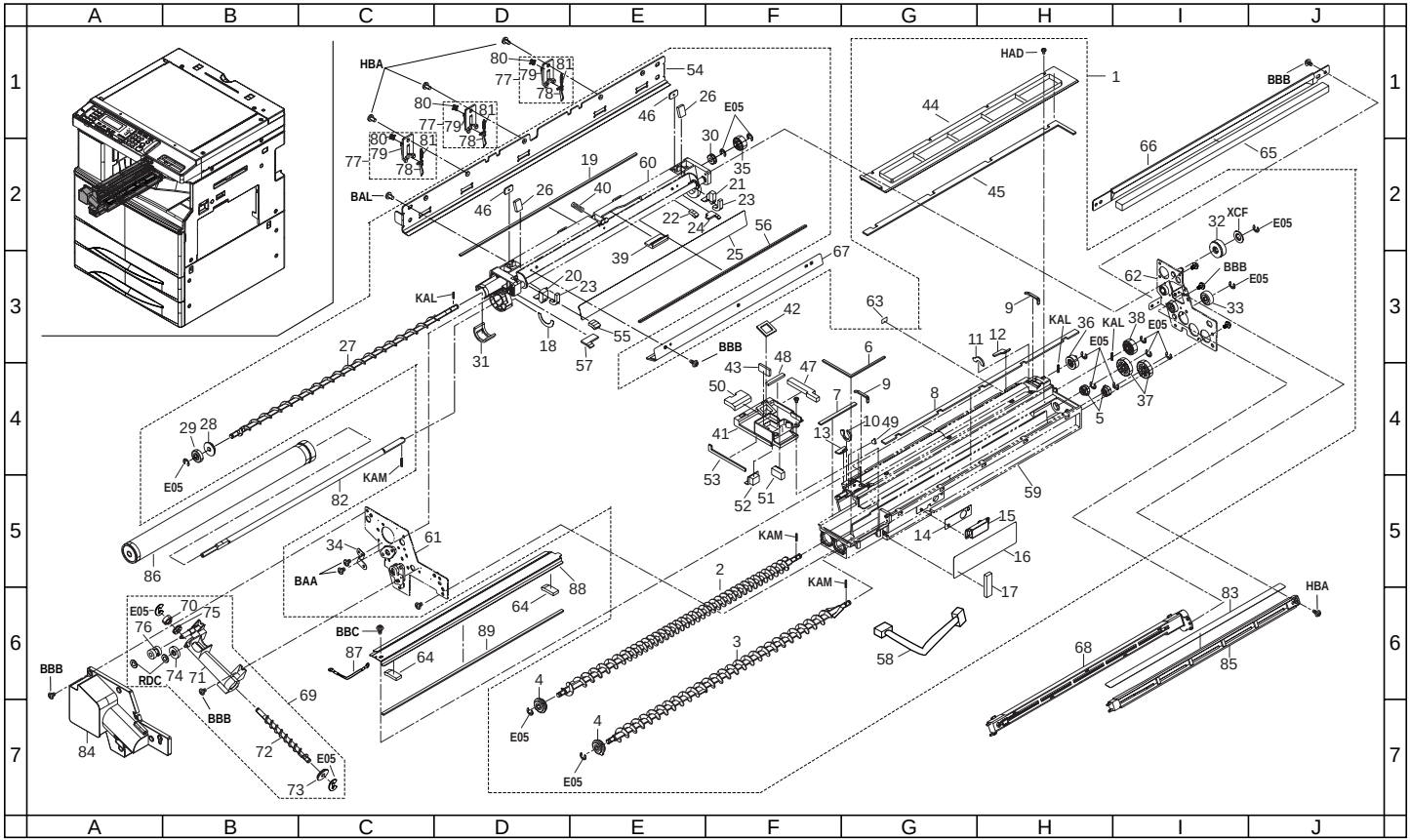
A B C D E F G H I J
1 2 3 4 5 6 7
HBA
BAL
KAL
KAM
BAA
BBB
BBC
HAD
XCF
E05
RDC

FIG. 11 DEVELOPING SECTION I

SP	Ref. No.	Part. No.	Description	Quantity 230V	Quantity 240V
◉	1	2AR93010	PARTS,IMAGE FORMATION ASS'Y(SP)	1	1
	2	•2AR14040	LEFT SPIRAL,DEVELOPING	1	1
	3	•2AR14050	RIGHT SPIRAL,DEVELOPING	1	1
	4	•49028113	BUSHING 6-19,DEV.UNIT	2	2
	5	•2AR14380	REAR BUSHING,AGITATION	2	2
	6	•2AR14200	FRONT SPONGE,DEVELOPING	1	1
	7	•2AR14330	LEFT SPONGE,DEVELOPING	1	1
	8	•2AR14210	RIGHT SPONGE,DEVELOPING	1	1
	9	•2AR14260	SPONGE A,COVER DOCTOR BLADE	2	2
	10	•2AR14450	FRONT SEAL,MAGNET ROLLER SIDE	1	1
	11	•2AR14460	REAR SEAL,MAGNET ROLLER SIDE	1	1
	12	•2AR14400	REAR SEAL,DEVELOPING	1	1
	13	•2AR14250	SEAL,DEVELOPING	1	1
	14	•2AR14160	SPACER,TONER SENSOR	1	1
	15	•33914190	TONER SENSOR	1	1
	16	•2AR14290	RIGHT FILM,DEVELOPING	1	1
	17	•2AR14410	RIGHT FRONT SPONGE,DEVELOPING	1	1
	18	•2AR18080	SPACER,DRUM	1	1
◉	19	•2AR18190	LOWER SPONGE,CLEANING	1	1
◉	20	•2AR18350	FRONT FILM,CLEANING	1	1
◉	21	•2AR18360	REAR FILM,CLEANING	1	1
◉	22	•2AR18160	REAR SPONGE A,CLEANING	1	1
◉	23	•2AR18370	SPONGE,CLEANING	2	2
◉	24	•2AR18220	REAR SEAL A,CLEANING	1	1
◉	25	•2AR18230	INNER FILM,CLEANING	1	1
◉	26	•2AR18340	SPONGE,MOUNT BLADE	2	2
	27	•2AR18050	SPIRAL,CLEANING	1	1
	28	•2AR18380	BUSHING,CLEANING	1	1
◉	29	•63814060	GEAR 20,AGITATION	1	1
◉	30	•63818250	REAR BUSHING,TONER DISPOSAL ROLLER	1	1
◉	31	•2AR18200	FRONT SPONGE,CLEANING	1	1
	32	•2AR18100	GEAR 21,THRUST	1	1
	33	•72320210	LOWER GEAR, EJECT IDLE	1	1
	34	•34909050	FRONT GROUND PLATE,DRUM DRIVE	1	1
◉	35	•2AR18110	GEAR 17,SPIRAL	1	1
	36	•2AR14110	GEAR 16,MAGNET ROLLER	1	1
	37	•34922570	GEAR 23,DEVELOPING	2	2
	38	•2AR14310	GEAR 19,PADDLE	1	1
	39	•2AR18270	LEVER,PRESSURE RELEASE	1	1
	40	•2AR18140	SPRING,BLADE	1	1
	41	•2AR14170	FRONT LID,DEVELOPING	1	1
	42	•2AR14140	FRONT SPONGE C,LID DEVELOPING	1	1
	43	•2AR14350	FRONT SPONGE E,LID DEVELOPING	1	1
	44	•2AR14320	UPPER LID,DEVELOPING	1	1
	45	•2AR14280	UPPER SPONGE,LID DEVELOPING	1	1
	46	•33302080	MOUNT M3	2	2
	47	•2AR14130	FRONT SPONGE B,LID DEVELOPING	1	1
	48	•2AR14470	SEAL,BUSHING MAGNET ROLLER	1	1
	49	•2AR14480	RETAINER M3	1	1
	50	•2AR14490	FRONT SPONGE F,LID DEVELOPING	1	1
	51	•2AR14500	FRONT SPONGE G,LID DEVELOPING	1	1
	52	•2AR14510	FRONT SPONGE H,LID DEVELOPING	1	1
	53	•2AR14520	FRONT SPONGE I,LID DEVELOPING	1	1
◉	54	•2AR93110	PARTS,LOWER SEAL CLEANING,SP	1	1
◉	55	•2AR18150	FRONT SPONGE A,CLEANING	1	1
◉	56	•2AR18170	INNER SPONGE,CLEANING	1	1
◉	57	•2AR18210	FRONT SEAL A,CLEANING	1	1
	58	•2AR27250	WIRE,IMAGE FORMATION	1	1
	59	•2AR14020	HOUSING,DEVELOPING	1	1
	60	•2AR18010	HOUSING,CLEANING	1	1
	61	•2AR09010	FRONT FRAME,IMAGE FORMATION	1	1
	62	•2AR09020	REAR FRAME,IMAGE FORMATION	1	1
	63	2AR14300	LOWER FILM,DEVELOPING	3	3
	64	2AR14430	SPONGE C,COVER DOCTOR BLADE	2	2
	65	2AR14440	LOWER SPONGE,DEVELOPING	1	1
	66	2AR17050	RIGHT GUIDE,TRANSFER	1	1
◉	67	2AR93100	PARTS,BLADE CLEANING(SP)	1	1
◉	68	2AR93020	PARTS,CHARGE ASS'Y(SP)	1	1
	69	2AR93080	PARTS,RECYCLE ASS'Y(SP)	1	1
	70	•19518240	GEAR 12,RECYCLE	1	1
	71	•2AR18060	HOUSING,RECYCLE	1	1
	72	•2AR18070	SPIRAL,RECYCLE	1	1
	73	•2AR18380	BUSHING,CLEANING	1	1
	74	•35322020	GEAR 20,PAPER FEED DRIVE	1	1
	75	•63818250	REAR BUSHING,TONER DISPOSAL ROLLER	1	1
	76	•72919050	GEAR 12/15,RECYCLE SECTION	1	1
	77	2AR00400	SEPARATION CLAW ASS'Y	3	3
◉	78	•2AR18240	CLAW,SEPARATION	3	3
	79	•2AR18250	MOUNT BASE,CLAW SEPARATION	3	3
	80	•2AR18260	PULLEY,CLAW SEPARATION	3	3

• Parts with "•" are component parts or sub-assemblies of the assembly appearing immediately above them.
• Parts with "◉" indicates the Service parts.

• Parts with "• •" are component parts or sub-assembly with "•" appearing immediately above them.

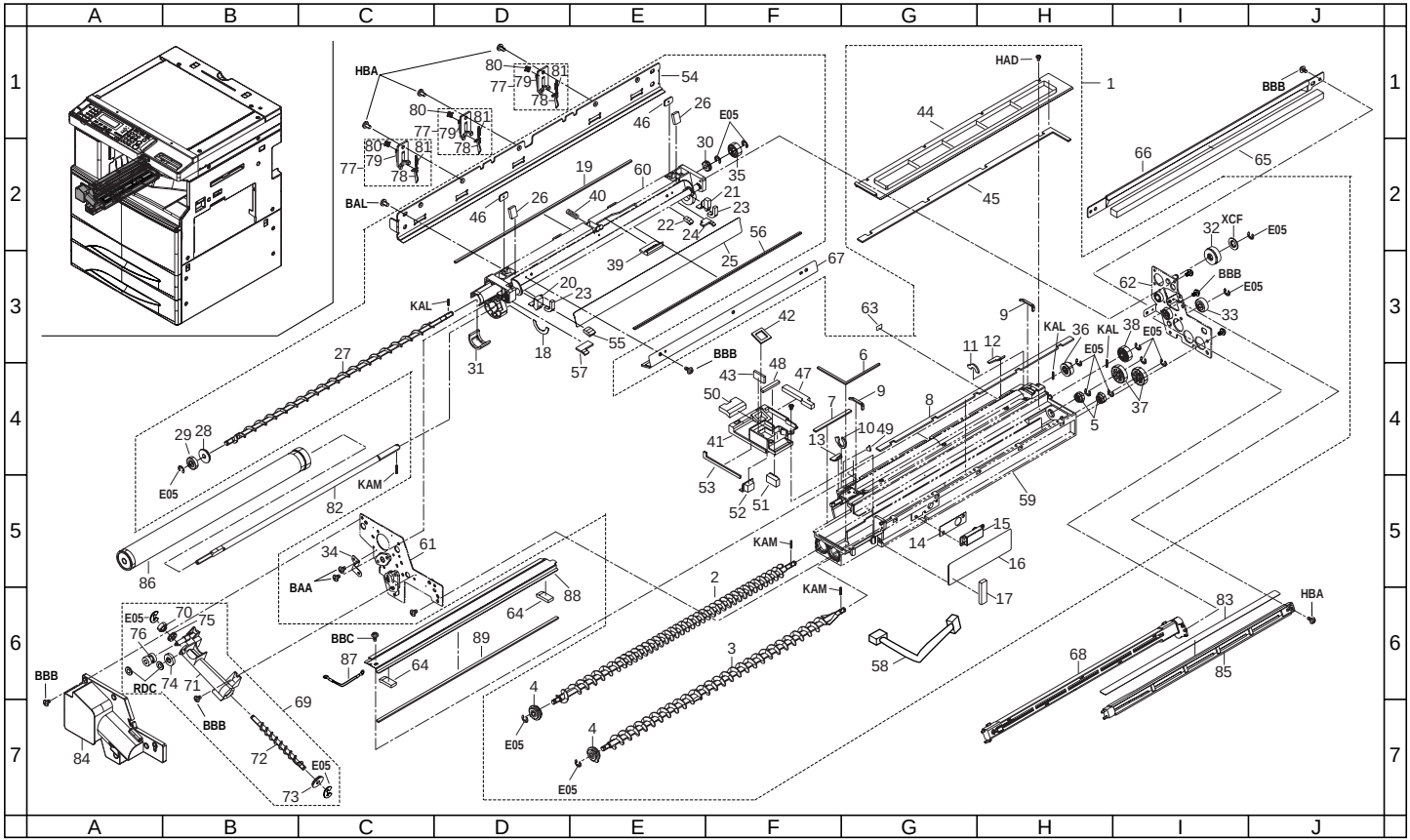
A B C D E F G H I J
1 2 3 4 5 6 7
HBA
80 77 79 81 78
54
26
46
E05
30
35
19
60
BAL
40
21
23
22
24
56
39
25
67
KAL
20
23
55
18
57
31
27
42
63
BBB
43
48
47
6
50
7
9
41
10
49
13
8
53
52
51
59
29
28
E05
82
KAM
86
34
61
BAA
88
64
89
BBC
87
64
2
3
4
E05
4
E05
KAM
KAM
14
15
16
17
58
HAD
1
44
45
BBB
66
65
32
XCF
E05
62
BBB
E05
33
9
11
12
KAL
36
E05
KAL
38
E05
37
5
83
HBA
68
85
BBB
84
RDC
70
75
76
74
71
BBB
69
72
E05
73
E05

FIG. 11 DEVELOPING SECTION I

SP	Ref. No.	Part. No.	Description	Quantity 230V	Quantity 240V
	81	•2AR18280	SPRING,CLAW SEPARATION	3	3
◉	82	2AR08030	SHAFT,DRUM	1	1
	83	2AR09060	FILM,LIGHT SHIELD	1	1
	84	2AR09070	FRONT COVER,IMAGE FORMATION	1	1
	85	2AR09160	RAIL,MC	1	1
◉	86	2AR82020	SET,DRUM(EUR)	1	1
	87	2AR27620	DIODE,DEVELOPING SEAL	1	1
◉	88	2AR93090	PARTS,COVER DOCTOR BLADE(SP)	1	1
	89	2AR14270	SPONGE B,COVER DOCTOR BLADE	1	1

• Parts with "•" are component parts or sub-assemblies of the assembly appearing immediately above them.
• Parts with "◉" indicates the Service parts.

• Parts with "• •" are component parts or sub-assembly with "•" appearing immediately above them.

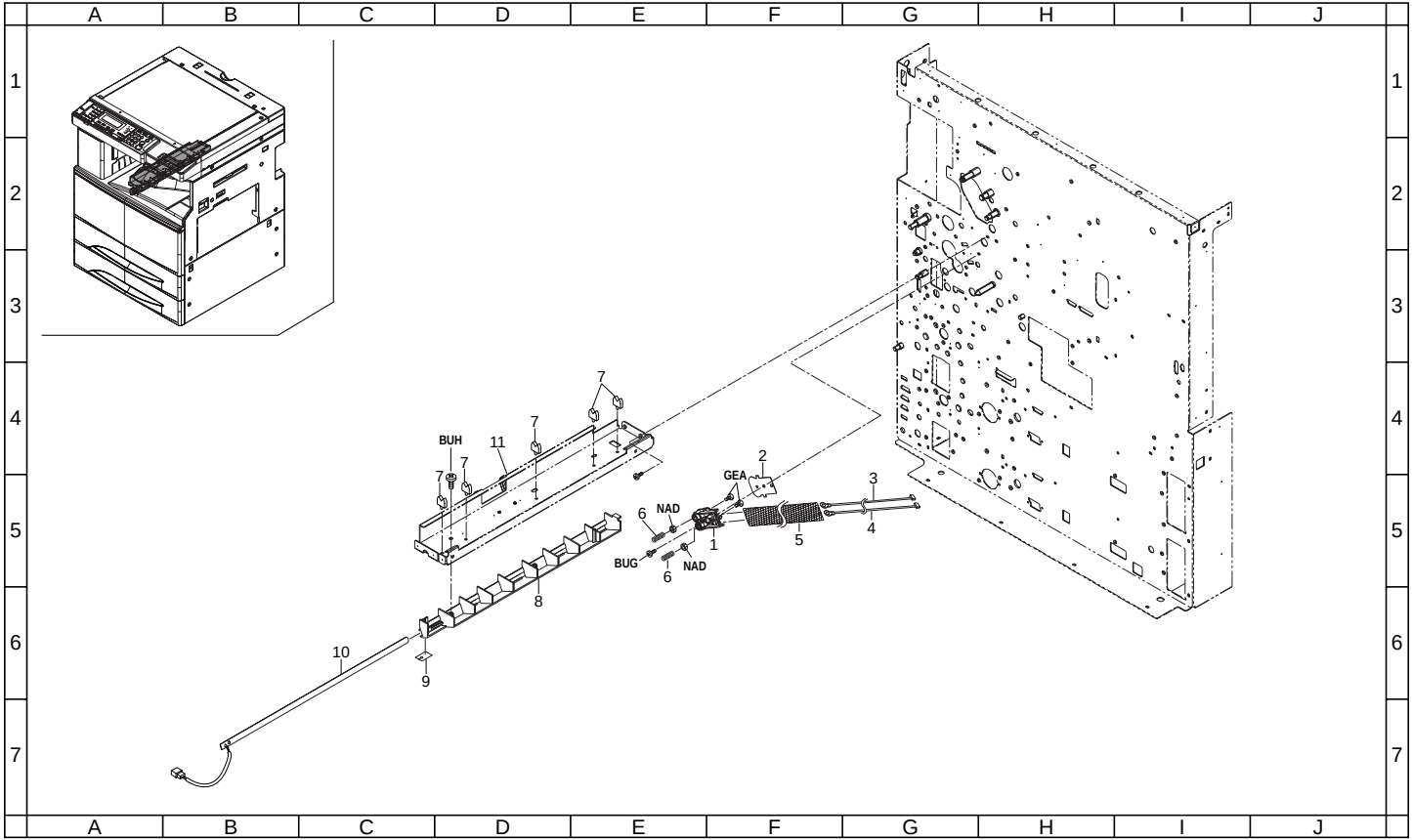
A B C D E F G H I J
1 2 3 4 5 6 7
BUH
11
7
GEA
2
3
NAD
6
1
BUG
5
4
8
10
9

FIG. 12 DEVELOPING SECTION II

SP	Ref. No.	Part. No.	Description	Quantity 230V	Quantity 240V
◉	1	2AR10060	TERMINAL BASE,MAIN CHARGER	1	1
◉	2	2AR10070	SHEET,MAIN CHARGER TERMINAL BASE	1	1
	3	2AR27480	WIRE,MAIN HIGH VOLTAGE	1	1
◉	4	2AR27490	WIRE,GRID	1	1
	5	2AR27630	SHIELD,HIGH VOLTAGE WIRE	1	1
◉	6	63516160	SPRING,TRANSFORMER TERMINAL	2	2
	7	M2105730	MINIATURE CLAMP,UAMS-07-0	5	5
	8	2AR10080	MOUNT BASE,CLEANING LAMP	1	1
◉	9	2AR27640	FILM,CLEANING LAMP	1	1
◉	10	2AR27031	LAMP,CLEANING LAMP	1	1
	11	2AR02280	LEFT REINFORCEMENT,MIDDLE	1	1

• Parts with "•" are component parts or sub-assemblies of the assembly appearing immediately above them.
• Parts with "◉" indicates the Service parts.

• Parts with "• •" are component parts or sub-assembly with "•" appearing immediately above them.

FIG. 13 FIXING SECTION

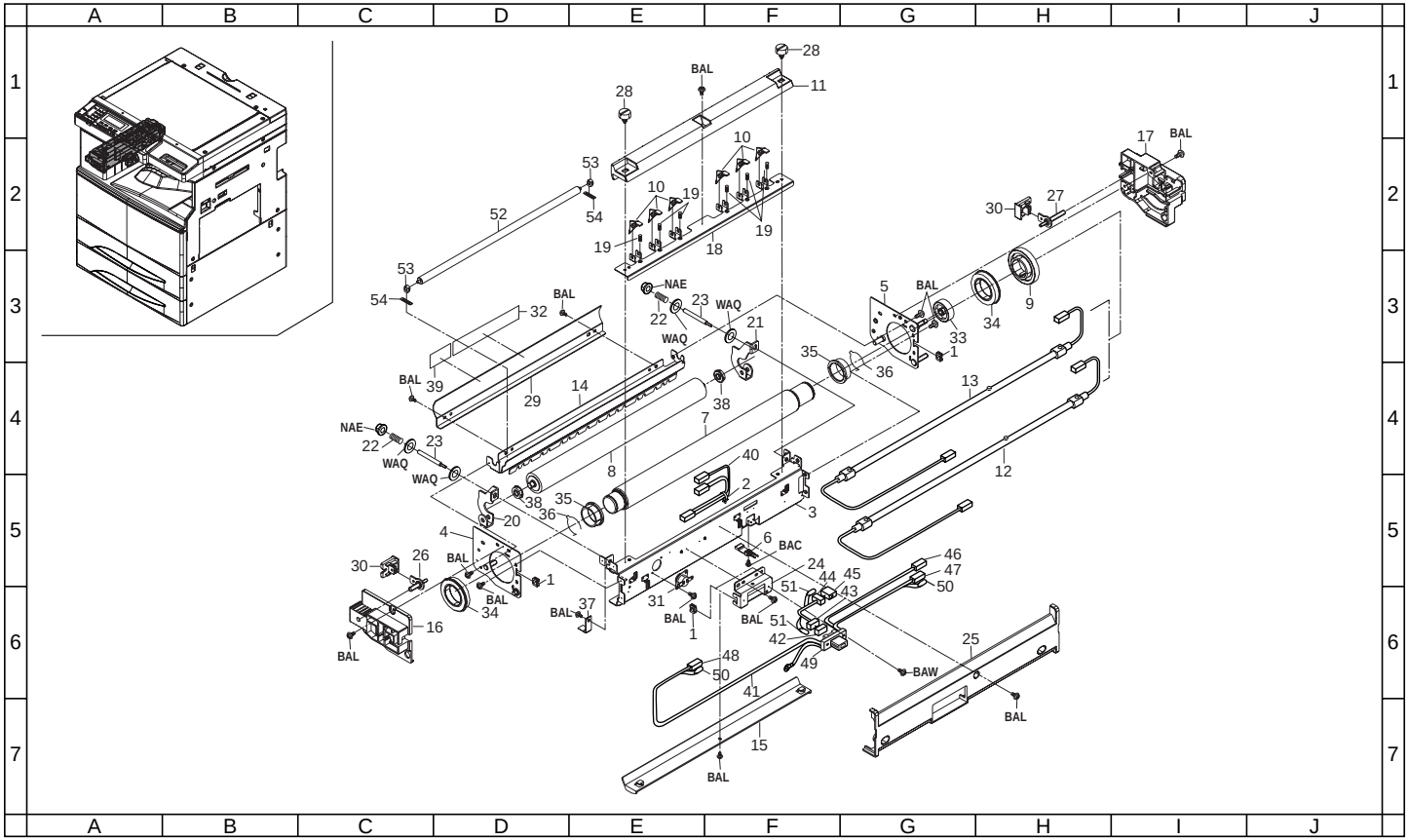

FIG. 13 FIXING SECTION

SP	Ref. No.	Part. No.	Description	Quantity 230V	Quantity 240V
◉		2AR93072	PARTS,FIXING ASS'Y 230(SP)	1	1
	1	•M2104350	EDGING,EDS-0607M(KITAGAWA)	4	4
	2	•M2109340	WIRE SADDLE,YMC-05-0(KITAGAWA)	1	1
	3	•2AR20010	HOUSING,FIXING	1	1
	4	•2AR20020	FRONT FRAME,FIXING	1	1
	5	•2AR20030	REAR FRAME,FIXING	1	1
◉	6	•2AR20040	THERMISTOR,FIXING	1	1
◉	7	•2AR93121	PARTS,ROLLER HEAT(SP)	1	1
◉	8	•2AR93130	PARTS,ROLLER PRESSURE(SP)	1	1
◉	9	•2AR20070	GEAR 50,HEAT ROLLER	1	1
◉	10	•2AR20080	SEPARATION CLAW,HEAT ROLLER	6	6
	11	•2AR20090	RIGHT REAR GUIDE,FIXING	1	1
◉	12	•2AR93181	PARTS,HEATER M FIXING 220-240(SP)	1	1
◉	13	•2AR93191	PARTS,HEATER S FIXING 220-240(SP)	1	1
	14	•2AR20171	LEFT FRONT GUIDE,FIXING	1	1
	15	•2AR20180	RIGHT FRONT GUIDE,FIXING	1	1
	16	•2AR20190	FRONT HOUSING,FIXING	1	1
	17	•2AR20200	REAR HOUSING,FIXING	1	1
	18	•2AR20210	MOUNT,HEAT ROLLER SEPARATION CLAW	1	1
◉	19	•2AR20220	SPRING,HEAT ROLLER SEPARATION CLAW	6	6
	20	•2AR20230	FRONT PRESSING PLATE,FIXING	1	1
	21	•2AR20240	REAR PRESSING PLATE,FIXING	1	1
◉	22	•2AR20260	SPRING,PRESSURE	2	2
	23	•2AR20300	PIN,FIXING PRESSURE(M)	2	2
	24	•2AR20320	LEFT MOUNT,FIXING DRAWER	1	1
	25	•2AR20340	COVER,FIXING	1	1
	26	•2AR20360	FRONT PIN,FIXING UNIT	1	1
	27	•2AR20370	REAR PIN,FIXING UNIT	1	1
	28	•2AR20400	RETAINING PIN,FIXING GUIDE	2	2
	29	•2AR20490	COVER,PRESSURE ROLLER	1	1
	30	•2AR20500	STOPPER,FIXING UNIT	2	2
◉	31	•2AR20560	THERMOSTAT 140,FIXING	1	1
	32	•20305130	LABEL L,HIGH TEMPERATURE CAUTION(EXP)	1	1
◉	33	•29807070	GEAR 28,BYPASS A	1	1
◉	34	•33420210	BEARING,HEAT ROLLER	2	2
◉	35	•33420220	BUSHING,HEAT ROLLER	2	2
◉	36	•33920130	STOPPER,HEAT ROLLER	2	2
◉	37	•34820310	STATIC ELIMINATOR,HEAT ROLLER	1	1
◉	38	•35920130	BEARING,PRESSURE	2	2
	39	•68305100	CAUTION LABEL,HIGH TEMPERATURE(JPN)	1	1
	40	•2AR27610	WIRE B,FIXING UNIT	1	1
	41	•2AR27260	WIRE,FIXING UNIT	1	1
	42	••J0149080	CONNECTOR,HOLDER,175133-8(AMP)	1	1
	43	••J0150040	RECEPTACLE,175778-4(AMP)	1	1
	44	••J0150020	RECEPTACLE,175778-2(AMP)	1	1
	45	••J0144020	CASE,175694-2(AMP)	1	1
	46	••J0167020	TAB-HOUSING,#187,BLUE,176448-6(AMP)	1	1
	47	••J0073050	POSITIVE CONNECTOR,#187,BLUE,V0,173974-6(AMP)	1	1
	48	••J0070010	POSITIVE CONNECTOR,#187,172074-1	1	1
	49	••J0066120	MINI-DRAWER,179323-8(AMP)	1	1
	50	••J0070910	POSITIVE CONTACTOR,#187,170331-1	2	2
	51	••J0150900	CONTACTOR,175161-1(AMP)	4	4
	52	•2AR20570	ROLLER,FIXING CLEANING	1	1
	53	•2AR20580	BUSHING, FIXING CLEANING	2	2
	54	•2AR20590	PLATE SPRING, FIXING CLEANING	2	2

• Parts with "•" are component parts or sub-assemblies of the assembly appearing immediately above them.
• Parts with "◉" indicates the Service parts.

• Parts with "• •" are component parts or sub-assembly with "•" appearing immediately above them.

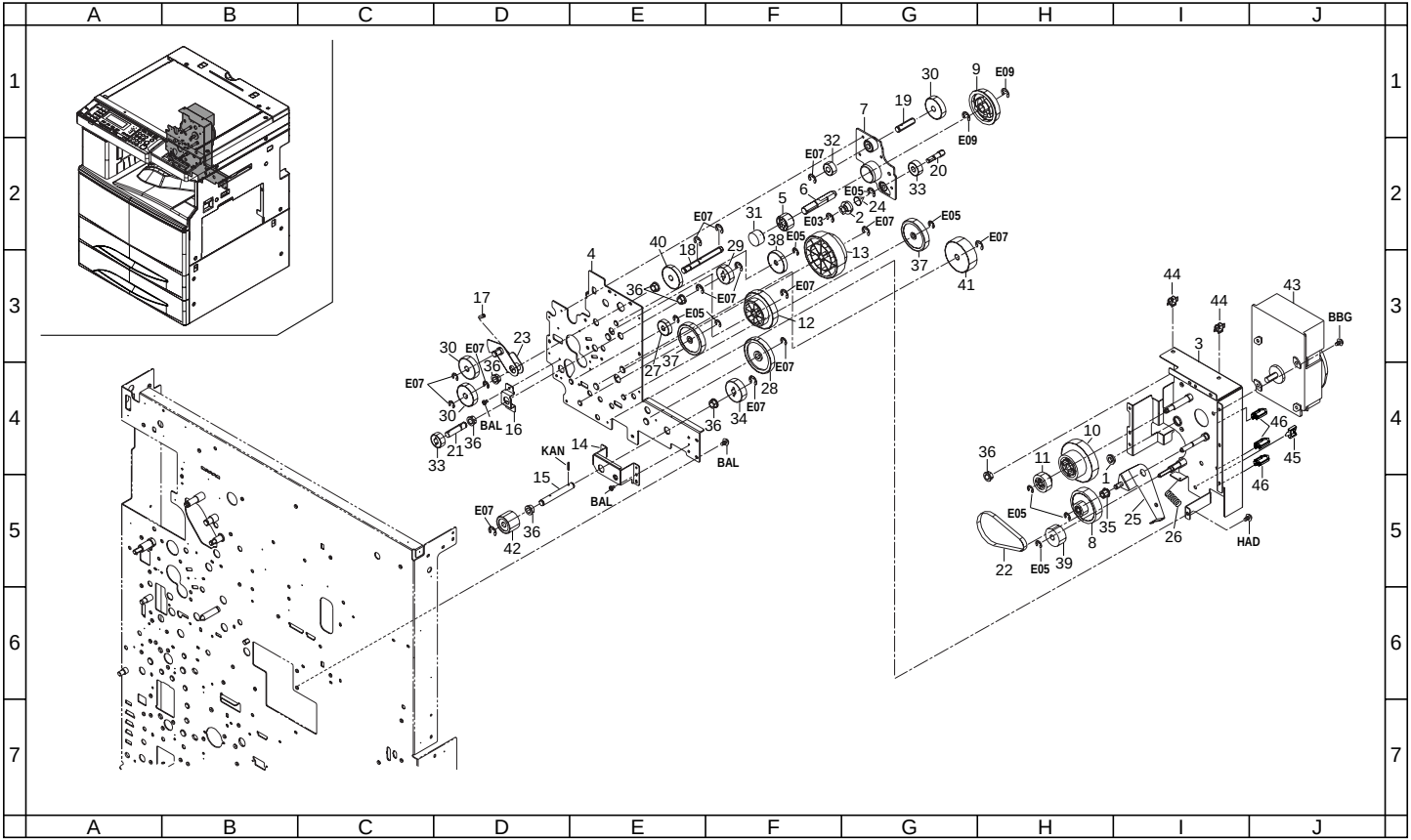
A B C D E F G H I J
1 2 3 4 5 6 7
E07 E09 E05 E03 BAL KAN HAD BBG

FIG. 14 DRIVING, COOLING SECTION I

SP	Ref. No.	Part. No.	Description	Quantity 230V	Quantity 240V
	1	G3306780	BEARING FLAW678ZZA	1	1
◉	2	18522430	COUPLER,TONER SUPPLY	1	1
	3	2AR22010	MOUNT,DRIVE MOTOR	1	1
	4	2AR22020	POSITIONING PLATE,DRIVE MOTOR	1	1
◉	5	2AR22030	COUPLING,DRUM	1	1
	6	2AR22040	SHAFT,COUPLING	1	1
	7	2AR22050	POSITIONING PLATE,DRUM	1	1
◉	8	2AR22060	GEAR 67/20	1	1
◉	9	2AR22070	PULLEY,DRUM	1	1
◉	10	2AR22080	GEAR 82/35	1	1
◉	11	2AR22090	GEAR CLEANING DRIVE	1	1
◉	12	2AR22100	GEAR 53/37	1	1
◉	13	2AR22110	GEAR 62/46	1	1
	14	2AR22120	MOUNT,BYPASS JOINT	1	1
	15	2AR22130	SHAFT,BYPASS JOINT	1	1
	16	2AR22140	MOUNT DUPLEXSHAFT	1	1
◉	17	2AR22160	SPRING,FIXING TENSION	1	1
	18	2AR22280	SHAFT,FIXING DRIVE	1	1
	19	2AR22300	SHAFT,CLEANING DRIVE	1	1
	20	2AR22310	SHAFT,DEVELOPING DRIVE	1	1
	21	2AR22370	SHAFT,DUPLEX DRIVE	1	1
◉	22	2AR22440	BELT,DRUM	1	1
	23	2AR22520	JOINT FIX	1	1
◉	24	2AR22570	SPRING,DEVELOPING DRIVE	1	1
	25	2AR22590	TENSION PLATE,DRUM	1	1
◉	26	2AR22600	SPRING,DRUM TENSION	1	1
◉	27	45727313	IDLE GEAR,FIXING UNIT	1	1
◉	28	45727505	GEAR 50T	1	1
◉	29	29721040	GEAR,24 SB	1	1
◉	30	33922330	GEAR 30,IDLE	3	3
◉	31	34922590	SPRING,DRUM DRIVE	1	1
◉	32	36706530	UPPER GEAR 16,REGISTRATION	1	1
◉	33	36722860	GEAR 18	2	2
◉	34	61714140	GEAR,DEVELOPING SLEEVE	1	1
◉	35	66015270	PULLEY 10,TONER RECYCLE	1	1
◉	36	67322230	BUSHING 8	7	7
	37	68314080	GEAR,DEVELOPING PADDLE	2	2
◉	38	72321350	GEAR 30, FD EJECT IDLE	1	1
◉	39	72622040	GEAR 25,FEED	1	1
◉	40	74322340	GEAR 32,DUPLEX	1	1
◉	41	75607340	GEAR 45,PF LOOP	1	1
◉	42	75714120	GEAR 24,DEVELOPING UNIT	1	1
◉	43	2AR93200	PARTS,MOTOR MAIN(SP)	1	1
	44	M2109200	LOCKING WIRE SADDLE,LWS-3S-2W	2	2
	45	M2509020	WIRE SADDLE,WS-2N	1	1
	46	M7009030	WIRE SADDLE,WS-4W(TAKEUCHI)	3	3

• Parts with "•" are component parts or sub-assemblies of the assembly appearing immediately above them.
• Parts with "◉" indicates the Service parts.

• Parts with "• •" are component parts or sub-assembly with "•" appearing immediately above them.

FIG. 15 DRIVING, COOLING SECTION II (Vi 310)

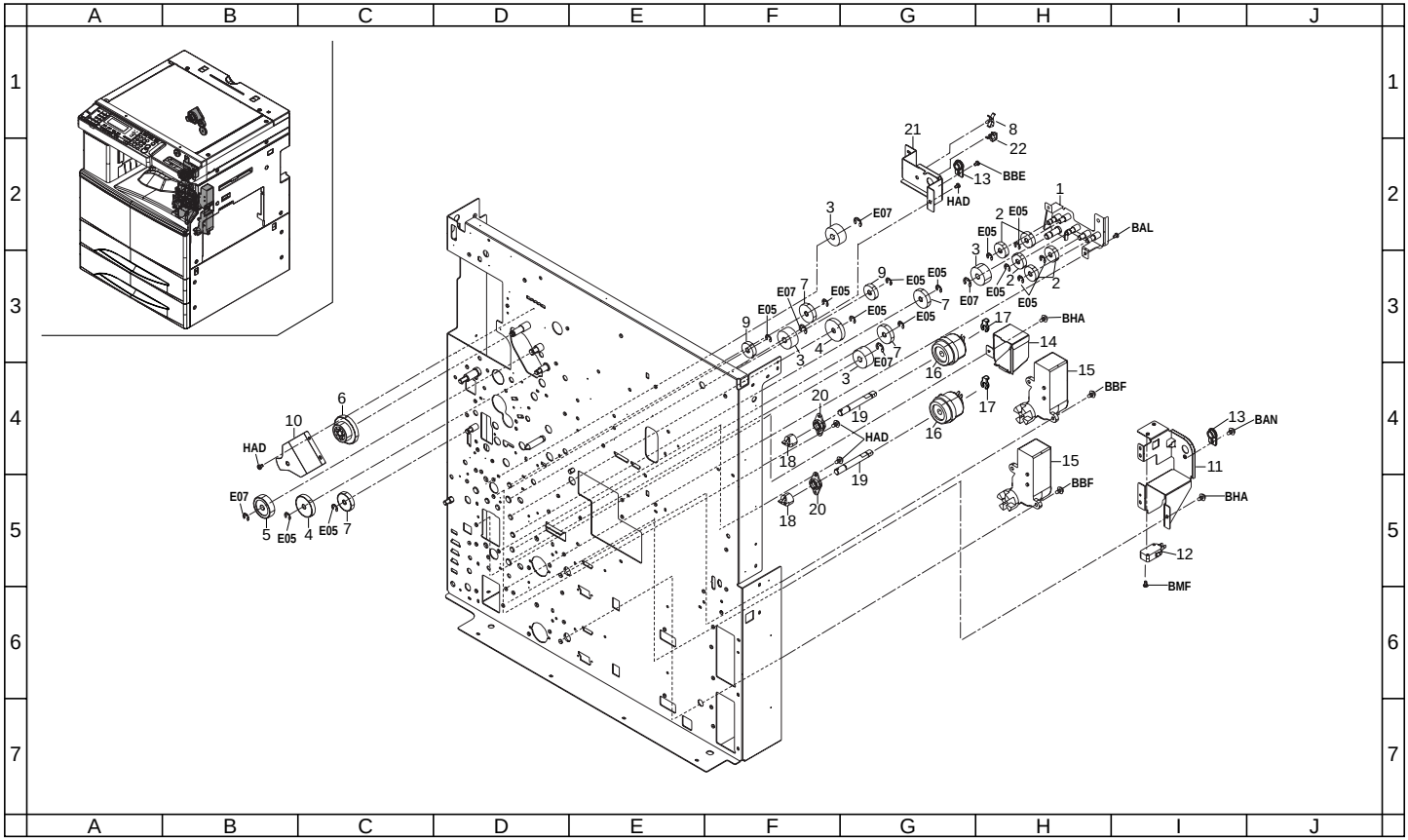

FIG. 15 DRIVING, COOLING SECTION II (Vi 310)

SP	Ref. No.	Part. No.	Description	Quantity 230V	Quantity 240V
	1	2AR07480	FRAME,DESK DRIVE	1	1
◉	2	45727313	IDLE GEAR,FIXING UNIT	5	5
◉	3	72622040	GEAR 25,FEED	4	4
◉	4	72321350	GEAR 30, FD EJECT IDLE	2	2
◉	5	61714140	GEAR,DEVELOPING SLEEVE	1	1
◉	6	2AR22390	GEAR 39/25 EJECT	1	1
◉	7	36915350	GEAR 25,DEVELOPING	4	4
	8	M7009020	WIRE SADDLE,LWS-1N-V0F(TAKEUCHI)	1	1
	9	45727313	IDLE GEAR,FIXING UNIT	2	2
◉	10	2AR22550	MOUNT EJECT GEAR	1	1
	11	2AR07580	LOWER SUPPORT PLATE,CLUTCH SHAFT	1	1
◉	12	61727540	INTERLOCK SWITCH B	1	1
◉	13	74718091	BUSHING CLEANING UNIT	2	2
	14	2AR07720	COVER,CASSETTE RAIL	1	1
◉	15	2AR93240	PARTS,MOTOR LIFT CASSETTE(SP)	2	2
◉	16	2AC06230	CLUTCH,RESISTANCE	2	2
◉	17	34806150	STOPPER 5	2	2
◉	18	2AR07320	COUPLING,PAPER FEED	2	2
	19	2AR07330	SHAFT,PRIMARY PAPER FEED CLUTCH	2	2
◉	20	2AR07700	BUSHING,PRIMARY PAPER FEED	2	2
	21	2AR07570	SUPPORT PLATE,CLUTCH SHAFT	1	1
	22	M2109330	WIRE SADDLE,YMC-10-0(KITAGAWA)	1	1

• Parts with "•" are component parts or sub-assemblies of the assembly appearing immediately above them.
• Parts with "◉" indicates the Service parts.

• Parts with "• •" are component parts or sub-assembly with "•" appearing immediately above them.

FIG. 16 ELECTRICAL COMPONENTS I

2AR-1/2AS

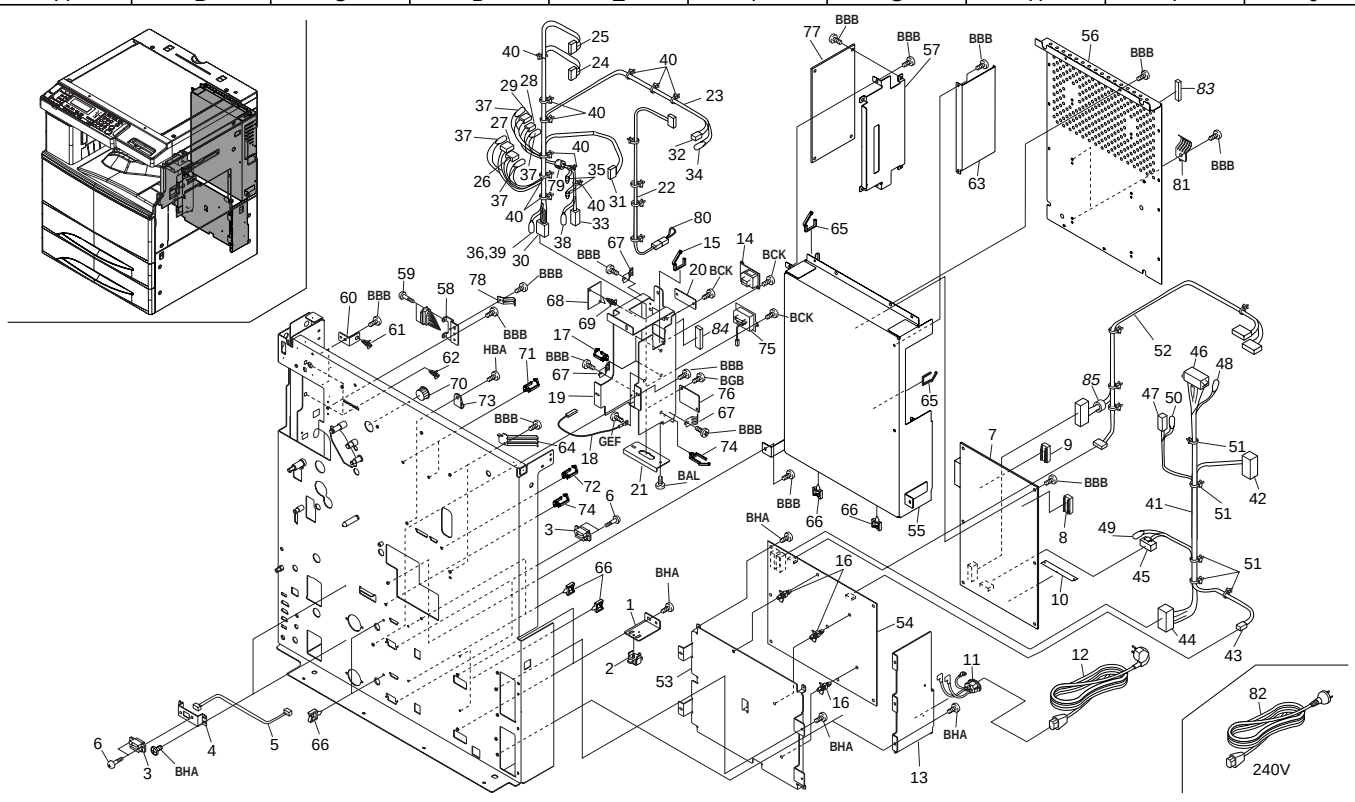

FIG. 16 ELECTRICAL COMPONENTS I

SP	Ref. No.	Part. No.	Description	Quantity 230V	Quantity 240V
	1	2AR07170	MOUNT,CASSETTE SWITCH	2	2
◉	2	66127010	SWITCH,COVER OPEN	2	2
	3	J0464080	RECEPTACLE,QR/P15-8S-C(02)(HIROSE)	4	4
	4	2AR07710	MOUNT,PAPER FEED DRAWER	2	2
	5	2AR27600	JUNCTION WIRING,PRIMARY PAPER FEED UNIT	2	2
	6	33927450	RETAINING PIN,DRAWER	8	8
◉	7	2AR68401	PCB MAIN PCB ASS'Y SP	1	1
◉	*8*	*2AR68014*	*IC,ROM MAIN SP*	*1*	*1*
◉	*9*	*2AR68024*	*IC,ROM ENGINE SP*	*1*	*1*
	10	2AR27120	IC,SIMM16M	1	1
	11	34901080	POWER INLET ASS'Y	1	1
◉	12	18527460	POWER CORD 220	1	
	13	2AR26100	MOUNT,INLET(230)	1	1
	14	J0326120	CASE,54082-1215(MOLEX)	1	1
	15	M2104280	EDGING,EDS-25L(KITAGAWA)	1	1
	16	M2108120	SPACER,KGLS-4S	3	3
	17	M2109200	LOCKING WIRE SADDLE,LWS-3S-2W	2	2
	18	2AC27880	WIRE FG,FINISHER	1	1
	19	2AR26271	MOUNT,OPTION CONNECTOR(EXP)	1	1
◉	20	2AR26290	LID FAX,SWITCH	1	1
	21	2AR26340	MOUNT,DECK CONNECTOR	1	1
	22	2AR27410	WIRE MMD		1
	23	2AR27440	WIRE,OPTION	1	1
	24	•J5000120	HOUSING PH 12P,PHR-12	1	1
	25	•J5000050	PLUG,PHR-5(JST)	1	1
	26	•J0390080	RECEPTACLE,51090-0800(MOLEX)	1	1
	27	•J0390090	RECEPTACLE,51090-0900(MOLEX)	1	1
	28	•J0390060	RECEPTACLE,51090-0600(MOLEX)	1	1
	29	•J0392060	RECEPTACLE,51090-0602(MOLEX)	1	1
	30	•J0314120	PLUG 12P,5559-12P	1	1
	31	•J6730180	PLUG,XADP-18V-F(JST)	1	1
	32	•J0272030	VH RECEPTACLE 3P,VHR-3N	1	1
	33	•J0315020	RECPTACLE 2P,5557-02R	1	1
	34	•J0272900	CONTACTOR,BVH-21T-P1.1(JST)	2	2
	35	•L4040000	CLOSE TYPE TERMINAL,0.5-1.75,CE-1	2	2
	36	•J0341900	PIN,MINI DRAWER,5558TL	2	2
	37	•J0390900	CONTACTOR,50212-8100(MOLEX)	26	26
	38	•J0340900	SOCKET,MINI DRAWER,5556TL	2	2
	39	•J0341910	PIN,MINI DRAWER,5558T2L	9	9
	40	•M0207000	BINDING BAND,KB-100-1	11	11
	41	2AR27240	WIRE,POWER SOURCE OUTPUT	1	1
	42	•J0260080	PLUG,EHR-8(JST)	1	1
	43	•J0260030	PLUG EH 3P,EHR-3	1	1
	44	•J6730300	PLUG,XADP-30V-F(JST)	1	1
	45	•J0272040	RECEPTACLE,VH,4P,VHR-4N	1	1
	46	•J0241180	PLUG SM 18P,SMP-18V-BC	1	1
	47	•J0045010	RECEPTACLE 1P,MINI MATENLOCK,172156-1	1	1
	48	•J0250900	SOCKET,BHF-001T-0.8SS	18	18
	49	•J0272900	CONTACTOR,BVH-21T-P1.1(JST)	4	4
	50	•J0045910	PIN,MINI MATENLOCK,(PLATIN) 170363-1	1	1
	51	•M2607010	BINDING BAND,PLT1M	5	5
	52	2AR27511	WIRE,LSU	1	1
	53	2AR26350	MOUNT,POWER SOURCE PCB	1	1
◉	54	2AR28070	POWER SOURCE PCB(200)	1	1
	55	2AR26020	LOWER SHIELD	1	1
	56	2AR26030	UPPER SHIELD	1	1
	57	2AR26050	MOUNT,ENGINE PCB	1	1
	58	2AR26130	MOUNT,DRAWER	1	1
	59	74327180	PIN,CONNECTOR	2	2
	60	2AR26150	MOUNT PCB,FEED SHIFT	2	2
	61	M2108430	SPACER,KGES-10	2	2
	62	M2108860	SPACER,PHD-10(KITAGAWA)	2	2
◉	63	2AR26250	LID,PRINTER OUTPUT	1	1
◉	64	65026152	GROUND PLATE,TONER MOTOR	2	2
	65	M2104220	EDGING,EDS-1717U	2	2
	66	M2109330	WIRE SADDLE,YMC-10-0(KITAGAWA)	8	8
◉	67	18526260	PLATE SPRING C,GROUND REINFORCEMENT	3	1
◉	68	2AC28140	HUMIDITY SENSOR PCB	1	1
	69	M2108120	SPACER,KGLS-4S	2	2
	70	M1203230	OPEN BUSHING,OCB-750	1	1
	71	M2109270	WIRE SADDLE,LWS-5S-2W(KITAGAWA)	2	2
	72	M2509020	WIRE SADDLE,WS-2N	1	1
	73	M2505180	CLAMP,GNK-3N(NIKKO)	1	1
	74	M7009020	WIRE SADDLE,LWS-1N-V0F(TAKEUCHI)	2	2
	75	2AR27590	WIRE,FINISHER GND	1	1
◉	76	77502090	LID FINISHER CABLE	1	1
◉	77	2AR01171	PCB ENGINE OUTPUT ASS'Y(EXP)	1	1
	78	2AR21840	GROUND PLATE,FEED SHIFT	1	1
	79	63827080	FERRITE CORE	1	1
	80	J0314020	PLUG 2P,5559-02P	1	1

• Parts with "•" are component parts or sub-assemblies of the assembly appearing immediately above them.
• Parts with "◉" indicates the Service parts.

• Parts with "• •" are component parts or sub-assembly with "•" appearing immediately above them.

FIG. 16 ELECTRICAL COMPONENTS I

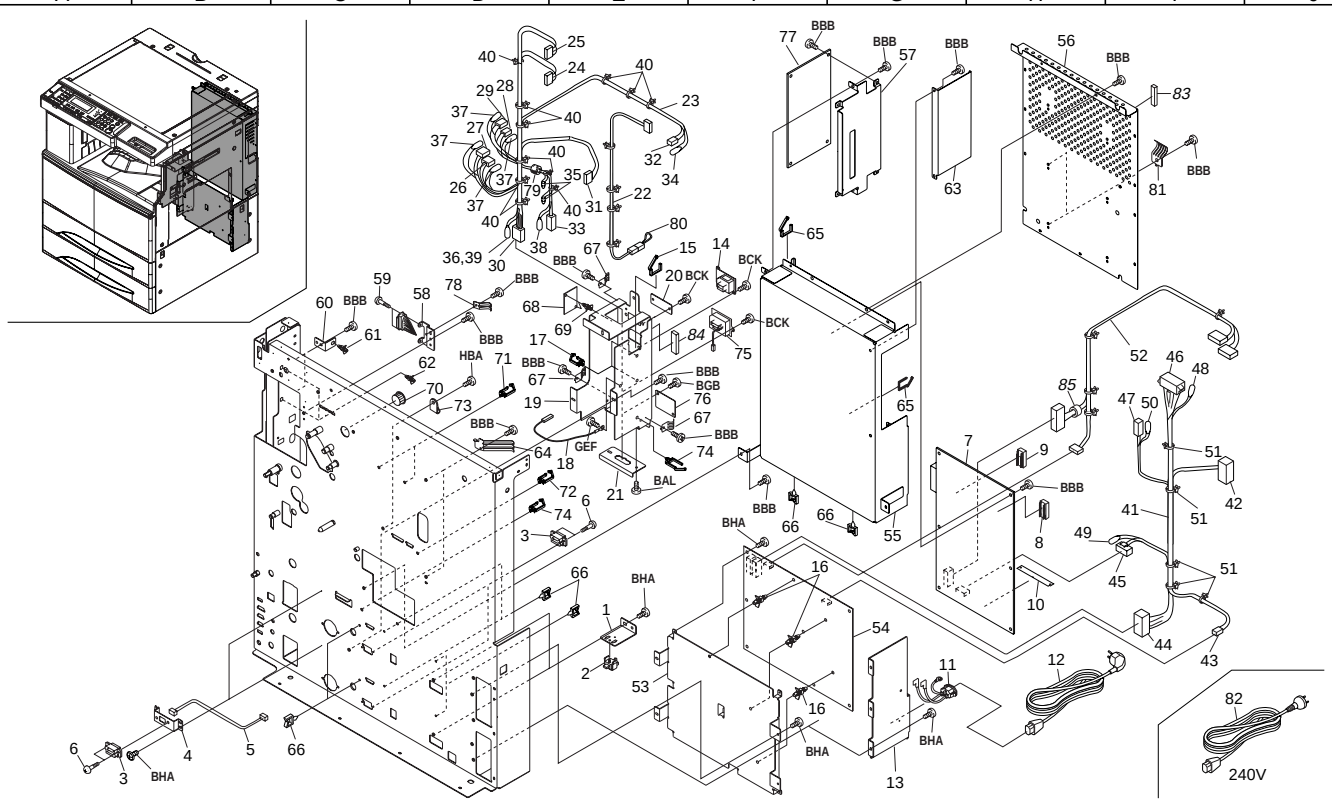

FIG. 16 ELECTRICAL COMPONENTS I

SP	Ref. No.	Part. No.	Description	Quantity 230V	Quantity 240V
	81	2AR26360	GROUND PLATE,SCANNER UNIT	2	2
◉	82	29927231	POWER CODE AS(240)		1
	83	*19027151*	*FRONT SHIELD,GASKET CCD*	*1*	
	84	*66727410*	*SHIELD GASKET,9X3X50*	*1*	
	85	*2AR27710*	*CORE 15-26X13*	*1*	

• Parts with "•" are component parts or sub-assemblies of the assembly appearing immediately above them.
• Parts with "◉" indicates the Service parts.

• Parts with "• •" are component parts or sub-assembly with "•" appearing immediately above them.

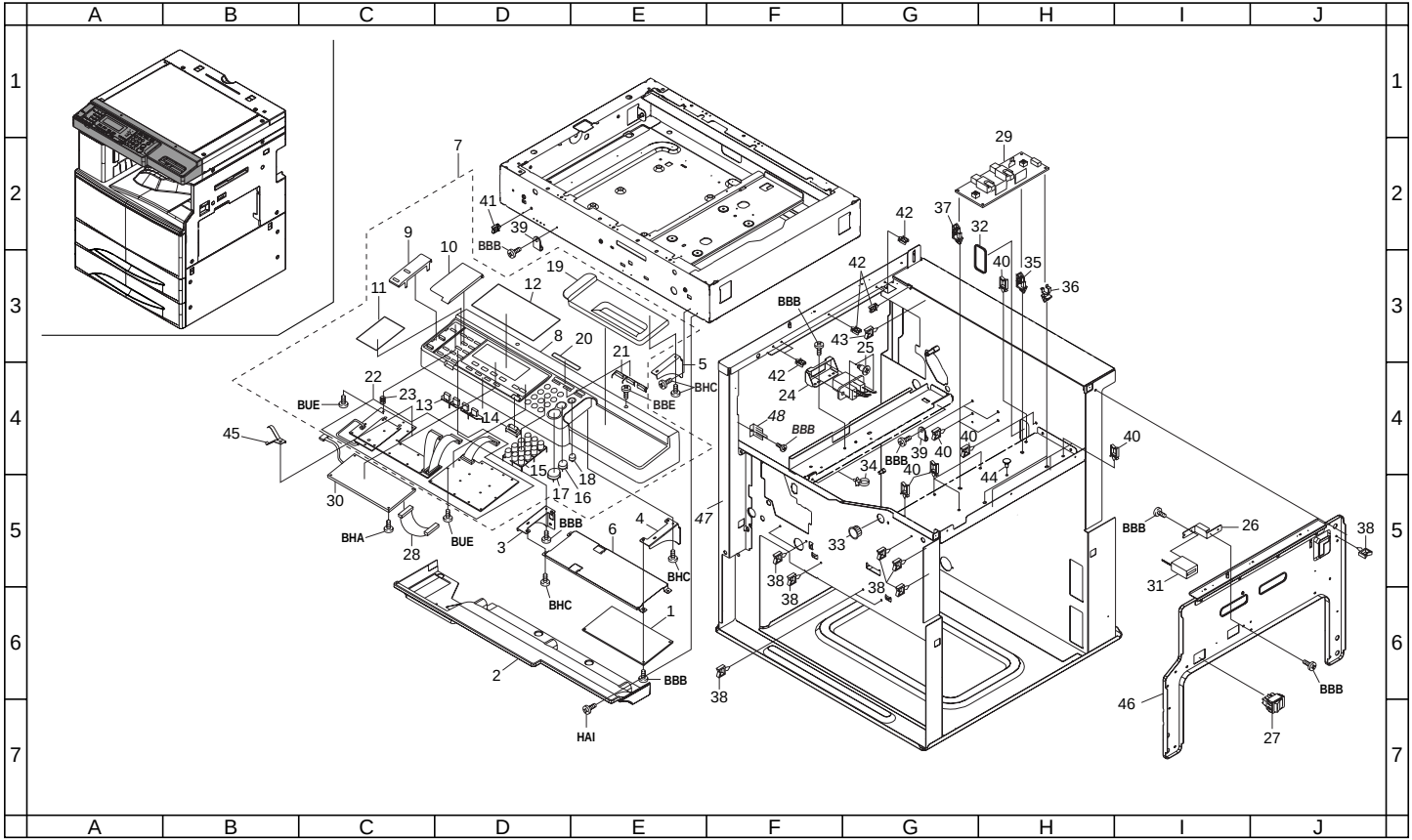
A B C D E F G H I J
1 2 3 4 5 6 7
1 2 3 4 5 6 7 8 9 10 11 12 13 14 15 16 17 18 19 20 21 22 23 24 25 26 27 28 29 30 31 32 33 34 35 36 37 38 39 40 41 42 43 44 45 46 47 48
BBB BBB BBB

FIG. 17 ELECTRICAL COMPONENTS II

SP	Ref. No.	Part. No.	Description	Quantity 230V	Quantity 240V
◉	*1*	*2AR01122*	*PCB OPERATION UNIT MAIN PCB ASS'Y*	*1*	*1*
◉	2	2AR04130	LOWER COVER,OPERATION UNIT	1	1
	3	2AR04150	LEFT MOUNT,OPERATION UNIT	1	1
	4	2AR04160	MOUNT,OPERATION UNIT MIDDLE	1	1
	5	2AR04170	RIGHT MOUNT,OPERATION UNIT	1	1
	6	2AR04180	MOUNT,OPERATION UNIT MAIN PCB	1	1
◉	*7*	*2AR93230*	*PARTS,OPERATION UNIT METRIC(SP) (Vi 310 EXCLUSIVE)*	*1*	*1*
◉	*7*	*2AS24030*	*OPERATION UNIT (METRIC) (Vi 230 EXCLUSIVE)*	*1*	*1*
	8	•2AR68110	COVER,OPERATION UNIT	1	1
	9	•2AR68140	LEFT COVER,OPERATION UNIT(METRIC)	1	1
	10	•2AR68150	CENTER COVER,OPERATION UNIT	1	1
	11	•2AR68180	LEFT SHEET,OPERATION UNIT(METRIC)	1	1
	12	•2AR68210	CENTER SHEET,OPERATION UNIT(METRIC)	1	1
	13	•2AR68220	KEYTOP,EXPOSURE	1	1
	14	•2AR68230	COVER,DATA	1	1
	15	•2AR68240	KEYTOP,TEN KEY	1	1
	16	•2AR68270	KEYTOP STOP CLEAR(METRIC)	1	1
	17	•2AR68300	KEYTOP,PRINT(METRIC)	1	1
	18	•2AR68330	KEYTOP,RESET(METRIC)	1	1
	19	•2AR68340	RIGHT COVER,OPERATION UNIT	1	1
	20	•2AR68370	CENTER LABEL,OPERATION UNIT(METRIC)	1	1
	21	•2AR68380	KEYTOP,PREHEAT	1	1
◉	*22*	*•2AR68390*	*OPERATION UNIT PCB (Vi 310 EXCLUSIVE)*	*1*	*1*
◉	*22*	*•2AS68010*	*OPERATION UNIT PCB (Vi 230 EXCLUSIVE)*	*1*	*1*
	23	•2AR68420	SPRING,OPERATION UNIT COVER	1	1
	24	2AR26060	RIGHT MOUNT,FIXING DRAWER	1	1
	25	2AR26070	PIN,FIXING DRAWER(M)	2	2
	26	2AR26310	MOUNT,TOTAL COUNTER	1	1
◉	27	2AR27010	SWITCH,MAIN	1	1
	28	2AR27301	WIRE,LCD	1	1
◉	29	2AR93260	PARTS,HIGH VOLTAGE PCB(SP)	1	1
◉	*30*	*2AR93270*	*PARTS,LCD PCB(SP) (Vi 310 EXCLUSIVE)*	*1*	*1*
◉	*30*	*2AS28010*	*LCD PCB (Vi 230 EXCLUSIVE)*	*1*	*1*
◉	31	34827220	TOTAL COUNTER	1	1
	32	72626210	BUSHING,24X54	1	1
	33	M1203230	OPEN BUSHING,OCB-750	1	1
	34	M2107120	BINDING BAND SG-130	1	1
	35	M2108430	SPACER,KGES-10	1	1
	36	M2108860	SPACER,PHD-10(KITAGAWA)	2	2
	37	M2108940	SPACER,FGES-10(KITAGAWA)	1	1
	38	M2109330	WIRE SADDLE,YMC-10-0(KITAGAWA)	9	9
	39	M2505180	CLAMP,GNK-3N(NIKKO)	2	2
	40	M2509020	WIRE SADDLE,WS-2N	11	11
	41	M7009020	WIRE SADDLE,LWS-1N-V0F(TAKEUCHI)	1	1
	42	M2105770	CLAMP,UAMS-09-0(KITAGAWA)	6	6
	43	M2509000	WIRE SADDLE,WS-1N	1	1
	44	M2108130	SPACER,KGPS-4S	1	1
	45	2AR26370	GROUND PLATE,LCD	1	1
	46	2AR02100	UPPER RIGHT REINFORCEMENT	1	1
	47	*2AR02110*	*FRONT LEFT REINFORCEMENT*	*1*	*1*
	48	*2AR21870*	*FRONT GROUND PLATE,FEED SHIFT*	*1*	

• Parts with "•" are component parts or sub-assemblies of the assembly appearing immediately above them.
• Parts with "◉" indicates the Service parts.

• Parts with "• •" are component parts or sub-assembly with "•" appearing immediately above them.

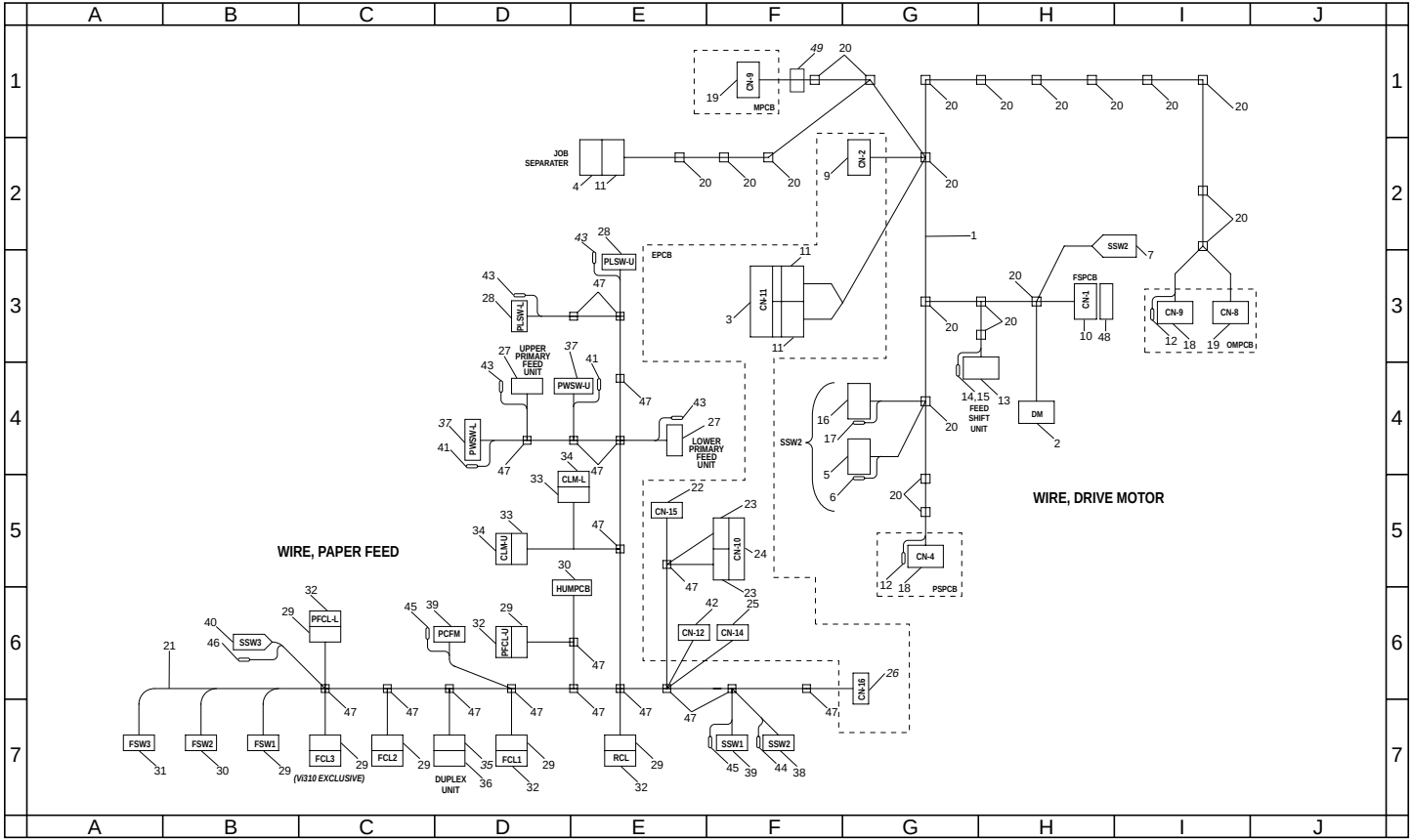
A B C D E F G H I J
1 2 3 4 5 6 7
CN-9
MPCB
JOB SEPARATER
CN-2
PLSW-U
EPCB
PLSW-L
CN-11
SSW2
FSPCB
CN-1
CN-9
CN-8
OMPCB
UPPER PRIMARY FEED UNIT
PWSW-U
PWSW-L
LOWER PRIMARY FEED UNIT
CLM-L
CLM-U
FEED SHIFT UNIT
DM
CN-15
CN-10
CN-4
PSPCB
WIRE, DRIVE MOTOR
WIRE, PAPER FEED
HUMPCB
PFCL-L
PFCL-U
PCFM
SSW3
CN-12
CN-14
CN-16
FSW3
FSW2
FSW1
FCL3
FCL2
FCL1
DUPLEX UNIT
RCL
SSW1
SSW2
(Vi310 EXCLUSIVE)

FIG. 18 ELECTRICAL COMPONENTS III

2AR-1/2AS

SP	Ref. No.	Part. No.	Description	Quantity 230V	Quantity 240V
	1	2AR27280	WIRE,DRIVE MOTOR	1	1
	2	•J0140090	RECEPTACLE MT 9P,173977-9	11	11
	3	•J0149200	CONNECTOR,HOLDER,2-175133-0(AMP)	1	1
	4	•J0144100	CASE,1-175694-0(AMP)	1	1
	5	•J0170010	PLUG,172335-1(AMP)	1	1
	6	•J0040910	SOCKET,MINI MATENLOCK,(PLATIN)170365-1	1	1
	7	•J0161020	POSITIVE,RECEPTACLE,174712-1(AMP)	1	1
	8	•J0070900	POSITIVE CONTACTOR,#187,170330-1	2	2
	9	•J5080240	RECEPTACLE,PHDR-24VS(JST)	1	1
	10	•J5080280	RECEPTACLE,PHDR-28VS(JST)	1	1
	11	•J0140100	RECEPTACLE,1-173977-0(AMP)	3	3
	12	•J0260900	CONTACTOR,BEH-001T-P0.6(JST)	8	8
	13	•J0418200	RECEPTACLE,QR/P8-20S-C(01)(HIROSE)	1	1
	14	•J0418910	SOCKET,QR/P8-SC-111(HIROSE)	18	18
	15	•J0418900	SOCKET,QR/P8-SC-121(HIROSE)	2	2
	16	•J0241020	PLUG SM 2P,SMP-02V-BC	1	1
	17	•J0250900	SOCKET,BHF-001T-0.8SS	1	1
	18	•J0260040	PLUG EH 4P,EHR-4	2	2
	19	•J5013150	RECEPTACLE,15KR-6H-PC(JST)	2	2
	20	•M0207000	BINDING BAND,KB-100-1	21	21
	21	*2AR27330*	*WIRE,PAPER FEED (Vi 310 EXCLUSIVE)*	*1*	*1*
	21	*2AS27020*	*WIRE,PAPER FEED (Vi 230 EXCLUSIVE)*	*1*	*1*
	22	•J5013130	RECEPTACLE,13KR-6H-PC(JST)	1	1
	23	•J5013120	RECEPTACLE,12KR-6H-PC(JST)	2	2
	24	•J5015240	CONNECTOR HOLDER,KRWH-24C-H(JST)	1	1
	25	•J5080120	RECEPTACLE,PHDR-12VS(JST)	1	1
	26	•J0260100	PLUG,EHR-10(JST)	1	1
	27	•J0150060	RECEPTACLE,175778-6(AMP)	2	2
	28	•J0150020	RECEPTACLE,175778-2(AMP)	2	2
	29	•J5013030	RECEPTACLE,03KR-6H-PC(JST)	7	7
	30	•J5013040	RECEPTACLE,04KR-6H-PC(JST)	2	2
	31	•J5013050	RECEPTACLE,05KR-6H-PC(JST)	1	1
	32	•J5016030	CASE,BU03P-TR-PC-H(JST)	4	4
	33	•J5013020	RECEPTACLE,02KR-6H-PC(JST)	2	2
	34	•J5016020	CASE,BU02P-TR-PC-H(JST)	2	2
	35	•J5013070	RECEPTACLE,07KR-6H-PC(JST)	1	1
	36	•J5016070	CASE,BU07P-TR-PC-H(JST)	1	1
	37	•J0441080	RECEPTACLE,DF11-8DS-2C(HIROSE)	2	2
	38	•J0243020	RECEPTACLE SM 2P,SMR-02V-B	1	1
	39	•J0241030	PLUG SM 3P,SMP-03V-BC	2	2
	40	•J0161020	POSITIVE,RECEPTACLE,174712-1(AMP)	1	1
	41	•J0441900	CONTACTOR,DF11-2428SC	12	12
	42	•J5080160	RECEPTACLE,PHDR-16VS(JST)	1	1
	43	•J0150900	CONTACTOR,175161-1(AMP)	16	16
	44	•J0242900	PIN SM,BYP-001T-0.6	1	1
	45	•J0250900	SOCKET,BHF-001T-0.8SS	4	4
	46	•J0070900	POSITIVE CONTACTOR,#187,170330-1	2	2
	47	•M2607010	BINDING BAND,PLT1M	*18*	*18*
	48	J0443280	PLUG,DF11-28DEP-2C(HIROSE)	1	
	49	*2AR27720*	*CORE 8-18X13*	*1*	

• Parts with "•" are component parts or sub-assemblies of the assembly appearing immediately above them.
• Parts with "◉" indicates the Service parts.

• Parts with "• •" are component parts or sub-assembly with "•" appearing immediately above them.

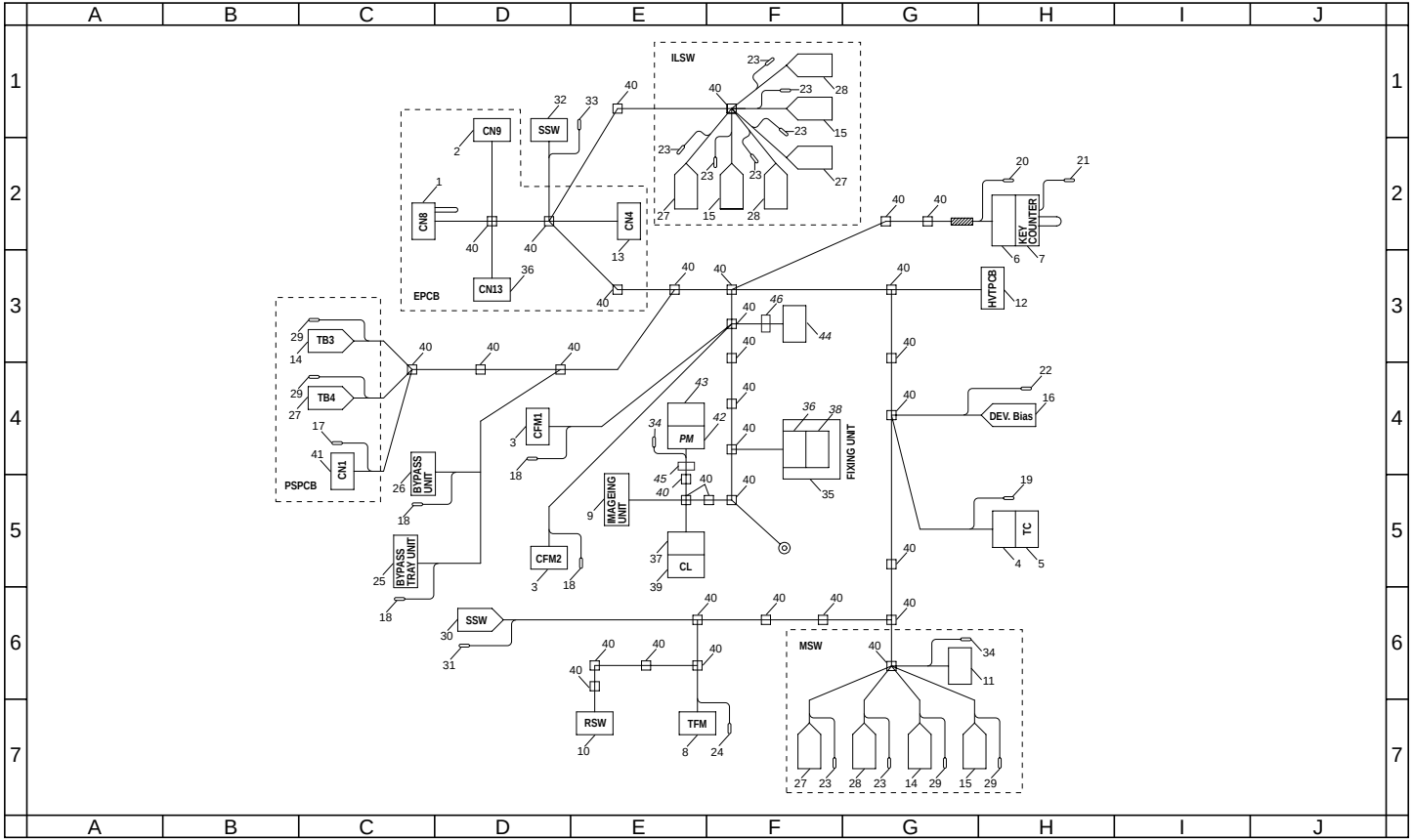
A B C D E F G H I J
1 2 3 4 5 6 7
ILSW
EPCB
CN9
SSW
CN8
CN4
CN13
PSPCB
TB3
TB4
CN1
BYPASS UNIT
BYPASS TRAY UNIT
CFM1
CFM2
IMAGEING UNIT
PM
FIXING UNIT
CL
HVTPCB
KEY COUNTER
DEV. Bias
TC
MSW
RSW
TFM

FIG. 19 ELECTRICAL COMPONENTS IV

SP	Ref. No.	Part. No.	Description	Quantity 230V	Quantity 240V
		2AR27290	*WIRE,MAIN SWITCH (Vi 310 EXCLUSIVE)*	*1*	*1*
		2AS27010	*WIRE,MAIN SWITCH (Vi 230 EXCLUSIVE)*	*1*	*1*
	1	•J5080300	RECEPTACLE,PHDR-30VS(JST)	1	1
	2	•J5013140	RECEPTACLE,14KR-6H-PC(JST)	1	1
	3	•J0443040	PLUG,DF11-4DEP-2C(HIROSE)	2	2
	4	•J0390040	RECEPTACLE,51090-0400(MOLEX)	1	1
	5	•J0395040	CASE,53358-0410(MOLEX)	1	1
	6	•J0223040	RECEPTACLE EL 4P,ELR-04V	1	1
	7	•J0220040	PLUG EL 4P,ELP-04V	1	1
	8	•J0450020	PLUG,DF3-2S-2C(HIROSE)	1	1
	9	•J0111120	RECEPTACLE 12P,MINI MATENLOCK,VO,172162-1	1	1
	10	•J5003030	RECEPTACLE,PHNR-03C-H(JST)	1	1
	11	•J0150020	RECEPTACLE,175778-2(AMP)	1	1
	12	•J5013100	RECEPTACLE,10KR-6H-PC(JST)	1	1
	13	•J5080220	RECEPTACLE,PHDR-22VS(JST)	1	1
	14	•J0076010	POSITIVE CONNECTOR,#250,(GREEN),172076-5	2	2
	15	•J0074010	POSITIVE CONNECTOR,#250,172076-1	3	3
	16	•M3506310	INSULATION SLEEVE,OS-110(SHINAGAWA)	1	1
	17	•J0361910	SOCKET 1189ATL	3	3
	18	•J0440900	PIN,DF11-EP2428PC(HIROSE)	25	25
	19	•J0390900	CONTACTOR,50212-8100(MOLEX)	4	4
	20	•J0222900	PIN EL,LLM-01T-1.3E	4	4
	21	•J0220900	SOCKET EL,LLF-01T-1.3E	2	2
	22	•L0001070	FAST-ON RECEPTACLE #110,24-20 (TIN),170043	1	1
	23	•J0074900	POSITIVE CONTACTOR,#250,170333-1	8	8
	24	•J0450900	SOCKET,DF3-2428SC(HIROSE)	2	2
	25	•J0440060	PLUG,DF11-6DEP-2C(HIROSE)	1	1
	26	•J0443160	PLUG,DF11-16DEP-2C(HIROSE)	1	1
	27	•J0077010	POSITIVE CONNECTOR,#250,(BLUE),172076-6	4	4
	28	•J0075010	POSITIVE CONNECTOR,#250,(YELLOW),172076-4	3	3
	29	•J0074910	POSITIVE CONTACTOR,#250,170334-1	4	4
	30	•J0161020	POSITIVE,RECEPTACLE,174712-1(AMP)	1	1
	31	•J0070900	POSITIVE CONTACTOR,#187,170330-1	2	2
	32	•J0243030	RECEPTACLE SM 3P,SMR-03V-B	1	1
	33	•J0242900	PIN SM,BYP-001T-0.6	2	2
	34	•J0150900	CONTACTOR,175161-1(AMP)	7	7
	35	•J0067120	MINI-DRAWER,179388-8(AMP)	1	1
	36	•J0140040	RECEPTACLE MT 4P,173977-4	2	2
	37	•J0140020	RECEPTACLE ,173977-2(AMP)	1	1
	38	•J0149080	CONNECTOR,HOLDER,175133-8(AMP)	1	1
	39	•J0144020	CASE,175694-2(AMP)	1	1
	40	•M2607010	BINDING BAND,PLT1M	*33*	*33*
	41	•J0361040	RECEPTACLE,3191-04R1(MOLEX)	1	1
	42	*•J0150050*	*RECEPTACLE,175778-5(AMP)*	*1*	*1*
	43	*•J0144050*	*CASE,175694-5(AMP)*	*1*	*1*
	44	*•J5003050*	*RECEPTACLE,PHNR-05C-H(JST)*	*1*	*1*
	45	*2AR27720*	*CORE 8-18X13*	*1*	
	46	*2AR27670*	*CORE 6-13X28*	*1*	
	46	*65027470*	*CORE,7-15X18*		*1*

• Parts with "•" are component parts or sub-assemblies of the assembly appearing immediately above them.
• Parts with "◉" indicates the Service parts.

• Parts with "• •" are component parts or sub-assembly with "•" appearing immediately above them.

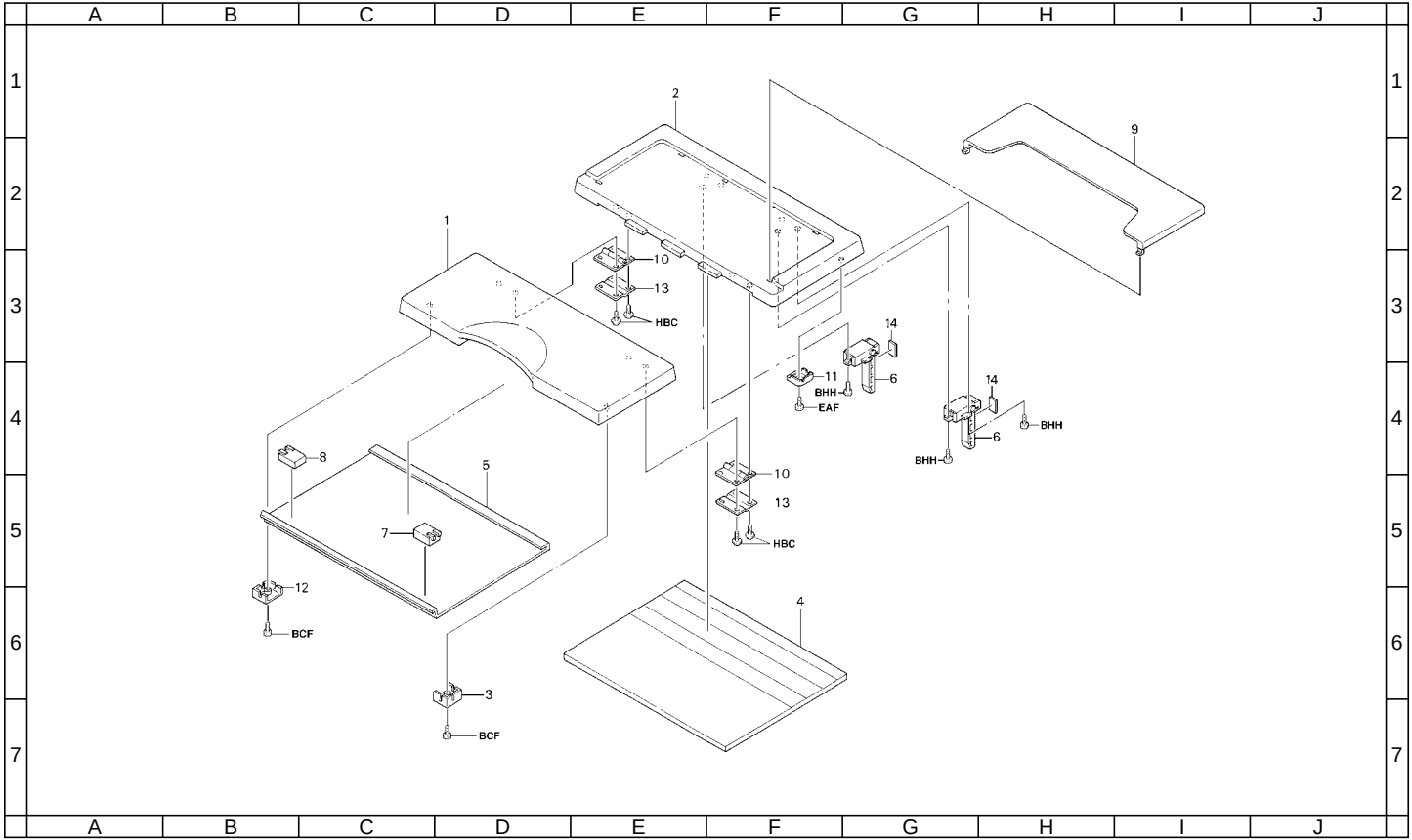
A B C D E F G H I J
1 2 3 4 5 6 7
1
2
3
4
5
6
7
8
9
10
11
12
13
14
HBC
BHH
EAF
BCF

FIG. 20 OPTION I

SP	Ref. No.	Part. No.	Description	Quantity 230V	Quantity 240V
◉		2AB00111	ORIGINAL HOLDER ASS'Y	1	1
◉	1	•19012011	COVER A,PLATEN	1	1
◉	2	•2AB12511	COVER B,PLATEN	1	1
	3	•19012030	RIGHT BASE,MAT	1	1
◉	4	•19012041	MAT,ORIGINAL HOLDER	1	1
◉	5	•19012050	SHEET,ORIGINAL HOLDER	1	1
	6	•19012060	HINGE,ORIGINAL HOLDER	2	2
	7	•19012090	RIGHT MOVING PLATE,MAT	1	1
	8	•19012100	LEFT MOVING PLATE,MAT	1	1
	9	•60904280	ORIGINAL POCKET	1	1
	10	•60904310	HINGE,ORIGINAL HOLDER	2	2
	11	•66012180	ACTUTATION PLATE,ORIGINAL DETECTION SWITCH	1	1
	12	•69312100	BASE,MAT	1	1
◉	13	•69312110	PLATE SPRING,ORIGINAL HOLDER	2	2
	14	•79904140	ORIGINAL HOLDER SPACER	2	2

• Parts with "•" are component parts or sub-assemblies of the assembly appearing immediately above them.
• Parts with "◉" indicates the Service parts.

• Parts with "• •" are component parts or sub-assembly with "•" appearing immediately above them.

CASSETTE HEATER

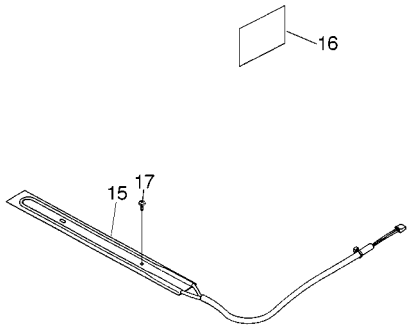

KEY COUNTER

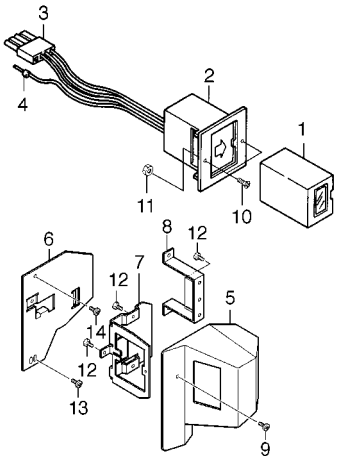

FIG. 21 OPTION II

SP	Ref. No.	Part. No.	Description	Quantity 230V	Quantity 240V
		66069781	SET PARTS ,KEY COUNTER	1	1
	1	•82142540	KEY COUNTER	1	1
	2	•41529121	SOCKET ASS'Y KEY COUNTER	1	1
	3	••J0220040	PLUG EL 4P,ELP-04V	1	1
	4	••*J0220900*	*SOCKET EL,LLF-01T-1.3E*	*4*	*4*
	5	••66060010	COVER,KEY COUNTER	1	1
	6	•66060021	RETAINER,KEY COUNTER COVER	1	1
	7	•66060030	RETAINER,KEY COUNTER	1	1
	8	•66060040	MOUNT,KEY COUNTER	1	1
	9	•C2303000	NUT BNM3 (BLACK)	1	1
	10	•B2303060	COUNTER-SUNK HEAD SCREW BFHM3X6 (BLACK)	2	2
	11	•B4104060	TRIPLE SCREW M4X6(CHROMIUM)	1	1
	12	•B4304060	TRIPLE SCREW M4X6 (BLACK)	4	4
	13	•B4304100	TRIPLE SCREW M4X10 (BLACK)	2	2
	14	•B4304200	TRIPLE SCREW M4X20(BLACK)	1	1
◉	15	33960020	HEATER,CASSETTE (240)	1	1
	16	3A105020	SEAL ON/OFF	1	1
	17	B1304060	BINDING SCREW BVM4X6 (BLACK)	2	2

• Parts with "•" are component parts or sub-assemblies of the assembly appearing immediately above them.
• Parts with "◉" indicates the Service parts.

• Parts with "• •" are component parts or sub-assembly with "•" appearing immediately above them.

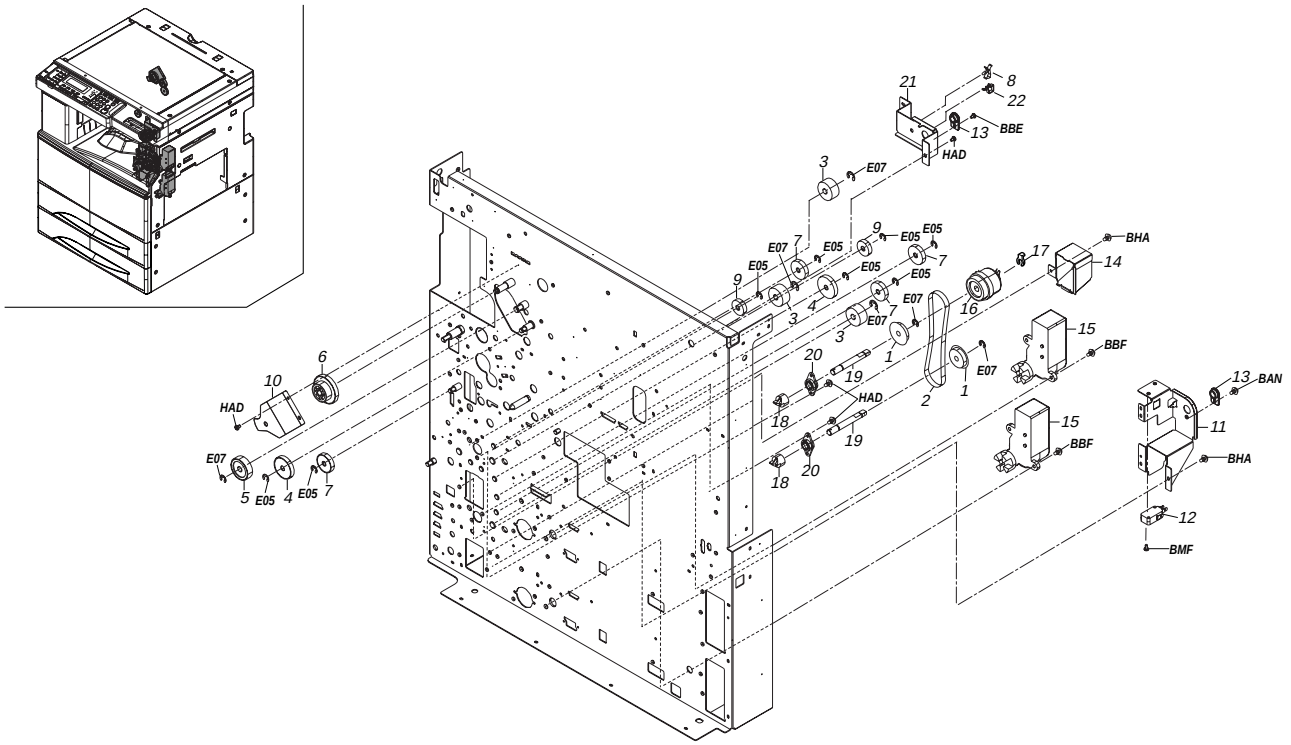
A B C D E F G H I J
1 2 3 4 5 6 7
21
8
22
13
BBE
HAD
3
E07
9
E05
7
17
BHA
14
16
15
BBF
10
6
HAD
E07
5
E05
4
E05
7
20
19
HAD
18
1
2
13
BAN
11
BHA
12
BMF

FIG. 22 DRIVING, COOLING SECTION II (Vi 230)

SP	Ref. No.	Part. No.	Description	Quantity 230V	Quantity 240V
◉	1	2AS07010	PULLEY 32,VERTICAL CONVEYING	2	2
◉	2	2AS07020	BELT 177,VERTICAL CONVEYING	1	1
◉	3	72622040	GEAR 25,FEED	3	3
◉	4	72321350	GEAR 30, FD EJECT IDLE	2	2
◉	5	61714140	GEAR,DEVELOPING SLEEVE	1	1
◉	6	2AR22390	GEAR 39/25 EJECT	1	1
◉	7	36915350	GEAR 25,DEVELOPING	4	4
	8	M7009020	WIRE SADDLE,LWS-1N-V0F(TAKEUCHI)	1	1
	9	45727313	IDLE GEAR,FIXING UNIT	2	2
◉	10	2AR22550	MOUNT EJECT GEAR	1	1
	11	2AR07580	LOWER SUPPORT PLATE,CLUTCH SHAFT	1	1
◉	12	61727540	INTERLOCK SWITCH B	1	1
◉	13	74718091	BUSHING CLEANING UNIT	2	2
	14	2AR07720	COVER,CASSETTE RAIL	1	1
◉	15	2AR93240	PARTS,MOTOR LIFT CASSETTE(SP)	2	2
◉	16	2AC06230	CLUTCH,RESISTANCE	1	1
◉	17	34806150	STOPPER 5	1	1
◉	18	2AR07320	COUPLING,PAPER FEED	2	2
	19	2AR07330	SHAFT,PRIMARY PAPER FEED CLUTCH	2	2
◉	20	2AR07700	BUSHING,PRIMARY PAPER FEED	2	2
	21	2AR07570	SUPPORT PLATE,CLUTCH SHAFT	1	1
	22	M2109330	WIRE SADDLE,YMC-10-0(KITAGAWA)	1	1

• Parts with "•" are component parts or sub-assemblies of the assembly appearing immediately above them.
• Parts with "◉" indicates the Service parts.

• Parts with "• •" are component parts or sub-assembly with "•" appearing immediately above them.

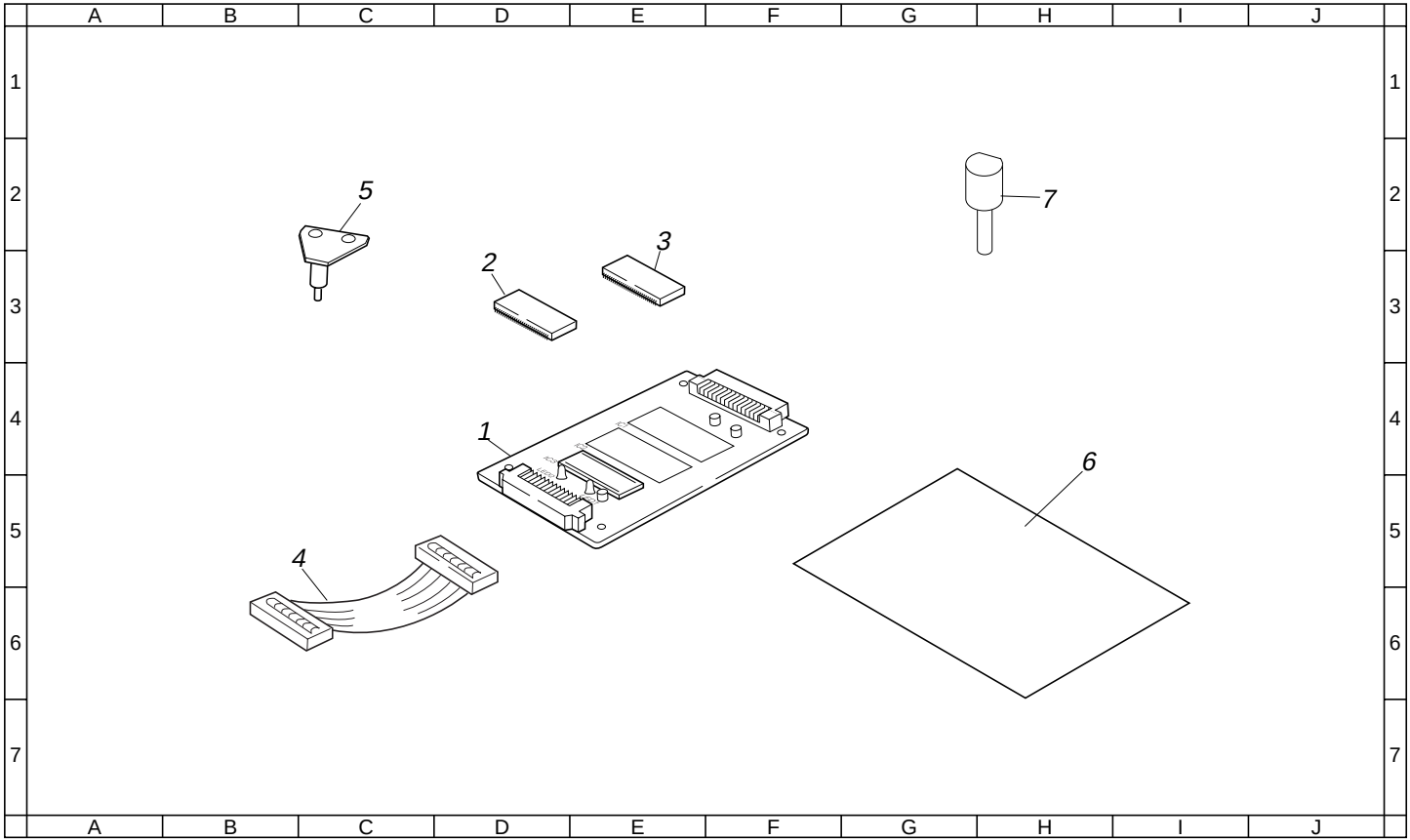
A B C D E F G H I J
1 2 3 4 5 6 7
5
2
3
7
1
6
4

FIG. 23 TOOLS

SP	Ref. No.	Part. No.	Description	Quantity	
				230V	240V
◉	*1*	*35968010*	*FLASH JIG PCB*	*1*	*1*
◉	*2*	*2AR68062*	*IC,ROM OPERATION UNIT 1 SP (EUR)*	*1*	*1*
◉	*3*	*2AR68072*	*IC,ROM OPERATION UNIT 2 SP (EUR)*	*1*	*1*
◉	*4*	*18568060*	*WIRE FLASH,DATA SHIFT*	*1*	*1*
◉	*5*	*2AC68230*	*SPECIAL TOOL,FRAME RETAINING*	*2*	*2*
◉	*6*	*2AC68240*	*SHEET,SCANNER ADJUSTMENT*	*1*	*1*
◉	*7*	*18568120*	*PIN B,POSITIONING*	*1*	*1*

• Parts with "•" are component parts or sub-assemblies of the assembly appearing immediately above them.
• Parts with "◉" indicates the Service parts.

• Parts with "• •" are component parts or sub-assembly with "•" appearing immediately above them.

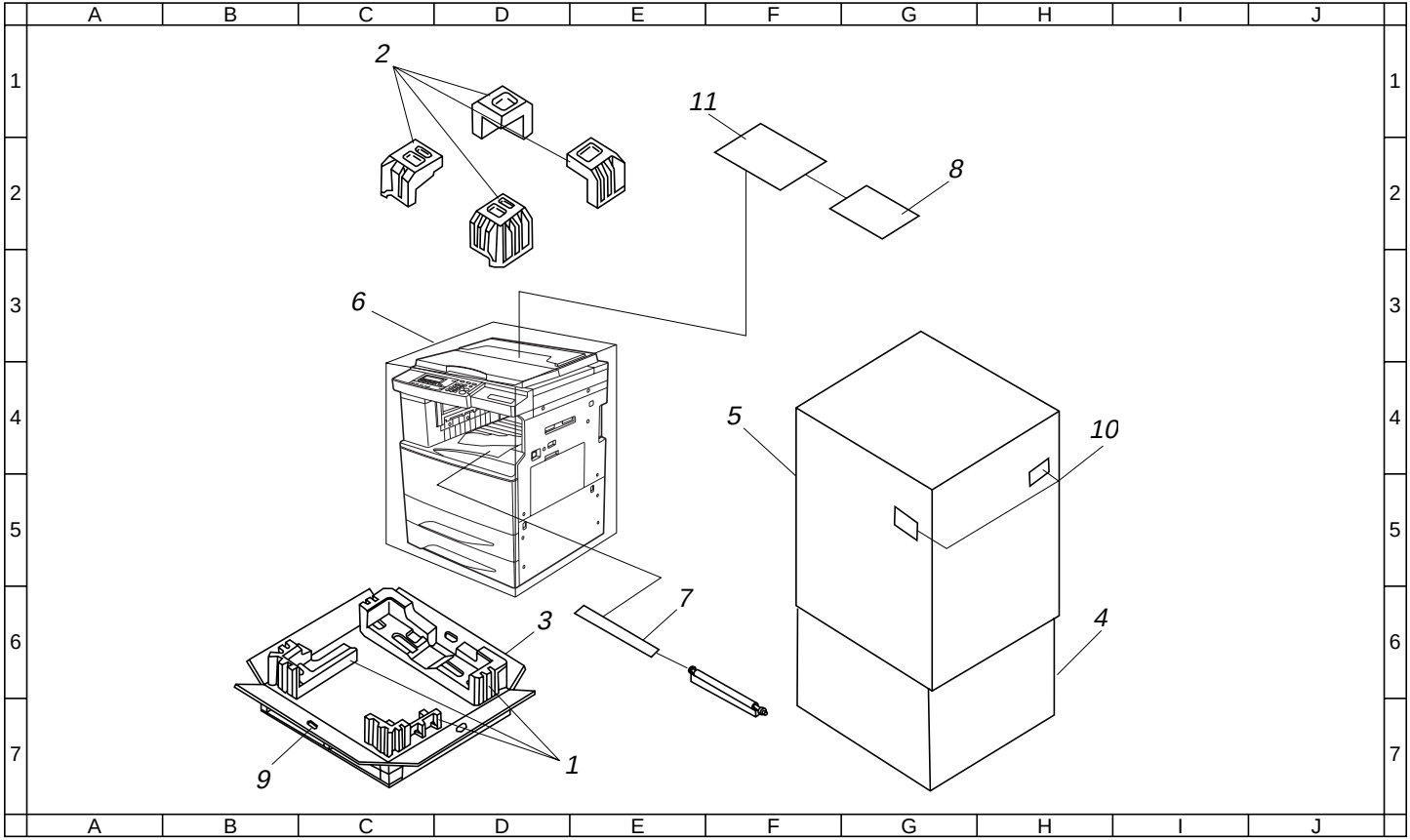
A B C D E F G H I J
1 2 3 4 5 6 7
2
11
8
6
5
10
7
3
4
1
9

FIG. 24 PACKAGING

SP	Ref. No.	Part. No.	Description	Quantity 230V	Quantity 240V
	1	*2AR78010*	*BOTTOM PAD*	*1*	*1*
	2	*2AR78020*	*UPPER PAD*	*1*	*1*
	3	*2AR78030*	*SKID*	*1*	
	3	*2AR78090*	*SKID(120/240)*		*1*
	4	*2AR78040*	*INNER FRAME*	*1*	*1*
	5	*2AR78060*	*OUTER CASE(EUR) (Vi 310 EXCLUSIVE)*	*1*	*1*
	5	*2AS78020*	*OUTER CASE(EUR) (Vi 230 EXCLUSIVE)*	*1*	*1*
	6	*2AR78100*	*MACHINE COVER*	*1*	*1*
	7	*2AR78110*	*AIR CAP BAG(80X450)*	*1*	*1*
	8	*2AR80022*	*INSTRUCTION HANDBOOK(EUR)*	*1*	*1*
	9	*PKP03060*	*HINGE JOINT HP-601W*	*4*	*4*
	10	*77778900*	*LABEL BAR CODE*	*2*	*2*
	11	*713P1110*	*POLYETHYLENE BAG FOR INSTALLATION PROCEDURE*	*1*	*1*

• Parts with "•" are component parts or sub-assemblies of the assembly appearing immediately above them.
• Parts with "◉" indicates the Service parts.

• Parts with "• •" are component parts or sub-assembly with "•" appearing immediately above them.

SP	Part. No.	Description	Quantity 230V	Quantity 240V	Fig. No.
	18512340	GUIDE,SCANNER WIRE	2	2	9
	18518380	RETAINING PIN,BLADE RELEASE	1	1	2
◉	18522430	COUPLER,TONER SUPPLY	1	1	14
◉	18526260	PLATE SPRING C,GROUND REINFORCEMENT	3	1	16
	18526360	*SHIELD,GASKET ISU FRONT*	*1*		*8*
◉	18527460	POWER CORD 220	1		16
◉	*18568060*	*WIRE FLASH,DATA SHIFT*	*1*	*1*	*23*
◉	*18568120*	*PIN B,POSITIONING*	*1*	*1*	*23*
◉	19012011	COVER A,PLATEN	1	1	20
	19012030	RIGHT BASE,MAT	1	1	20
◉	19012041	MAT,ORIGINAL HOLDER	1	1	20
◉	19012050	SHEET,ORIGINAL HOLDER	1	1	20
	19012060	HINGE,ORIGINAL HOLDER	2	2	20
	19012090	RIGHT MOVING PLATE,MAT	1	1	20
	19012100	LEFT MOVING PLATE,MAT	1	1	20
	19027151	*FRONT SHIELD,GASKET CCD*	*1*		*16*
	19518240	GEAR 12,RECYCLE	1	1	11
◉	2AB00111	ORIGINAL HOLDER ASS'Y	1	1	20
◉	2AB12230	LEFT ORIGINAL SIZE INDICATOR	1	1	8
◉	2AB12511	COVER B,PLATEN	1	1	20
	2AC05130	LABEL,SUPPLY(EUR)	1	1	1
◉	2AC06230	CLUTCH,RESISTANCE	6	6	6, 15, *22*
◉	2AC12100	LAMP,SCANNER	1	1	9
	2AC12110	UPPER MIRROR FRAME A,SCANNER	1	1	9
	2AC12120	LOWER MIRROR FRAME A,SCANNER	1	1	9
	2AC12130	REFLECTOR,SCANNER	1	1	9
	2AC12140	MIRROR A	1	1	9
	2AC12150	MIRROR B	1	1	9
	2AC12160	MIRROR FRAME B	1	1	9
	2AC12230	MOUNT,RELEASE SWITCH	1	1	8
	2AC12240	COVER,INVERTER	1	1	9
	2AC12260	LIGHT SHIELD,PI	1	1	9
	2AC12270	GUIDE FFC1	1	1	9
	2AC12280	HOLDER,ADF CONTACT GLASS	2	2	8
	2AC12300	HOLDER FFC	1	1	9
	2AC12360	GUIDE,RELEASE SWITCH	1	1	8
◉	2AC12370	SWITCH,RELEASE DETECTION	1	1	8
◉	2AC12380	SPRING,RELEASE SWITCH	1	1	8
	2AC12400	ADJUSTING PLATE B,MIRROR FRAME	1	1	9
	2AC26310	*SHIELD 10X8X20,GASKET*	*1*		*5*

SP	Part. No.	Description	Quantity 230V	Quantity 240V	Fig. No.
	2AC27880	WIRE FG,FINISHER	1	1	16
◉	2AC28120	INVERTER PCB	1	1	9
◉	2AC28140	HUMIDITY SENSOR PCB	1	1	16
◉	*2AC68230*	*SPECIAL TOOL,FRAME RETAINING*	*2*	*2*	*23*
◉	*2AC68240*	*SHEET,SCANNER ADJUSTMENT*	*1*	*1*	*23*
	2AG05200	LABEL,HIGH VOLTAGE CAUTION(EXP)	2	2	2
◉	2AR00130	RIGHT CLEANER RESISTANCE ASS'Y	1	1	6
	2AR00140	CASSETTE ASS'Y	2	2	3
	2AR00270	SCANNER FRAME ASS'Y	1	1	8
◉	2AR00281	LSU ASS'Y		1	10
◉	2AR00320	TRANSFER ROLLER ASS'Y	1	1	7
	2AR00400	SEPARATION CLAW ASS'Y	3	3	11
◉	2AR00620	LSU ASS'Y(EUR)	1		10
◉	*2AR01122*	*PCB OPERATION UNIT MAIN PCB ASS'Y*	*1*	*1*	*17*
◉	2AR01171	PCB ENGINE OUTPUT ASS'Y(EXP)	1	1	16
	2AR02010	FRONT FRAME	1	1	2
	2AR02020	REAR FRAME	1	1	2
	2AR02030	BASE	1	1	2
	2AR02040	REINFORCEMENT,MIDDLE	1	1	1
	2AR02050	LOWER RIGHT REINFORCEMENT	1	1	2
	2AR02060	LOWER LEFT REINFORCEMENT	1	1	2
	2AR02100	UPPER RIGHT REINFORCEMENT	1	1	17
	2AR02110	*FRONT LEFT REINFORCEMENT*	*1*	*1*	*17*
	2AR02120	REAR LEFT REINFORCEMENT	1	1	2
	2AR02130	UPPER LEFT REINFORCEMENT	1	1	8
	2AR02141	*UPPER REAR REINFORCEMENT A*	*1*	*1*	*2*
	2AR02150	UPPER REAR REINFORCEMENT B	1	1	8
	2AR02160	FRONT REINFORCEMENT,FRAME	1	1	2
	2AR02170	*REAR REINFORCEMENT,FRAME*	*1*	*1*	*2*
	2AR02180	BASE RUBBER	4	4	2
	2AR02190	HANDLE,MACHINE	4	4	2
	2AR02200	FRONT RIGHT MOUNT,HANDLE	1	1	2
	2AR02210	REAR RIGHT MOUNT,HANDLE	1	1	2
	2AR02240	MOUNT,LSU	1	1	10
	2AR02250	POSITIONING PLATE,LSU	1	1	10
	2AR02280	LEFT REINFORCEMENT,MIDDLE	1	1	12
	2AR02290	RIGHT REINFORCEMENT,MIDDLE	1	1	2
	2AR02300	UPPER FRONT FRAME	1	1	2
	2AR02310	UPPER REAR FRAME	1	1	2
	2AR02320	UPPER FRONT MOUNT,FRAME	1	1	8

• Parts with "◉" indicates the Service parts.

SP	Part. No.	Description	Quantity 230V	Quantity 240V	Fig. No.
	2AR02330	FRONT LEFT MOUNT,HANDLE	1	1	2
	2AR02340	REAR LEFT MOUNT,HANDLE	1	1	2
	2AR02350	ADJUSTING BASE,LSU	1	1	10
◉	2AR04010	TRAY,EJECT	1	1	1
◉	2AR04030	INNER COVER	1	1	1
◉	2AR04040	UPPER FRONT COVER	1	1	1
◉	2AR04050	UPPER RIGHT COVER	1	1	1
◉	2AR04060	LOWER RIGHT COVER	1	1	1
◉	2AR04070	FRONT LEFT COVER	1	1	1
◉	2AR04080	REAR LEFT COVER	1	1	1
◉	2AR04090	REAR COVER	1	1	1
◉	2AR04100	RIGHT COVER,PLATEN	1	1	1
◉	2AR04110	LEFT COVER,PLATEN	1	1	1
◉	2AR04120	REAR COVER,PLATEN	1	1	1
◉	2AR04130	LOWER COVER,OPERATION UNIT	1	1	17
◉	2AR04140	REAR COVER TRAY	1	1	1
	2AR04150	LEFT MOUNT,OPERATION UNIT	1	1	17
	2AR04160	MOUNT,OPERATION UNIT MIDDLE	1	1	17
	2AR04170	RIGHT MOUNT,OPERATION UNIT	1	1	17
	2AR04180	MOUNT,OPERATION UNIT MAIN PCB	1	1	17
◉	2AR04190	UPPER COVER,EJECT	1	1	1
◉	2AR04200	LEFT COVER,MIDDLE	1	1	5
	2AR04210	FRONT FULCRUM PLATE,LEFT MIDDLE COVER	1	1	5
	2AR04220	LEFT SHAFT,MIDDLE COVER	1	1	5
	2AR04260	LEFT SUPPORT PLATE,MIDDLE COVER	1	1	5
	2AR04270	LEFT FULCRUM PIN,MIDDLE COVER	2	2	2
	2AR04290	REAR FULCRUM PLATE,LEFT MIDDLE COVER	1	1	5
	2AR04301	FRONT SUPPORT PLATE,HOOK	1	1	5
	2AR04310	REAR SUPPORT PLATE,HOOK	1	1	5
	2AR04320	LEFT HANDLE,MIDDLE COVER	1	1	5
◉	2AR04340	LEFT SPRING,MIDDLE COVER	1	1	5
	2AR04350	SUPPORT PLATE,LEFT MIDDLE COVER	1	1	5
◉	2AR04400	FRONT COVER(EUR)	1	1	1
◉	2AR04550	LID PCB,FEED SHIFT	1	1	1
◉	2AR04560	LID,NCU	1	1	1
	2AR04570	REAR MOUNT,COVER	2	2	8
	2AR04580	*MOUNT,UPPER RIGHT COVER*	*2*	*2*	*1*
◉	*2AR04590*	*COVER,BYPASS TRAY*	*1*	*1*	*1*
◉	2AR05110	LABEL,CONVEYING JAM	1	1	1
	2AR05150	LABEL,CASSETTE OPERATION	2	2	3

SP	Part. No.	Description	Quantity 230V	Quantity 240V	Fig. No.
◉	2AR05170	LABEL,BYPASS JAM	1	1	1
	2AR05180	LABEL,HIGH TEMPERATURE CAUTION	1	1	5
◉	2AR05190	LABEL,CARTRIDGE OPERATION	1	1	1
	2AR05200	LABEL,PAPER UPPER LIMIT	2	2	3
	2AR05210	SHEET,CASSETTE SIZE INDICATION	2	2	3
	2AR06010	LOWERGUIDE BYPASSFEED	1	1	6
	2AR06020	UPPERGUIDE BYPASSFEED	1	1	6
◉	2AR06030	RIGHT ROLLER,FEED	1	1	6
	2AR06070	MOUNT,REGISTRATION SW	3	3	6
	2AR06250	GUIDE,FEED	1	1	6
◉	2AR06380	FILM,FEED GUIDE	1	1	6
◉	2AR06500	RIGHT ROLLER,RESISTANCE	1	1	6
◉	2AR06510	LEFT ROLLER,RESISTANCE	1	1	7
◉	2AR06520	LEFT ROLLER,FEED	1	1	7
	2AR06550	GUIDE,DUPLEX CONFLUENCE	1	1	7
◉	2AR06580	SPRING,PRESSING RESISTANCE	1	1	7
	2AR07010	CASSETTE	2	2	3
	2AR07020	BASE,CASSETTE	2	2	3
	2AR07030	WORK PLATE,CASSETTE BASE	2	2	3
	2AR07040	SHAFT,WORK PLATE	2	2	3
	2AR07050	RAIL A,CURSOR	2	2	3
	2AR07060	CURSOR A,CASSETTE	2	2	3
	2AR07070	CURSOR B,CASSETTE	2	2	3
	2AR07080	CURSOR C,CASSETTE	2	2	3
	2AR07090	RAIL C,CURSOR	2	2	3
	2AR07100	FRONT GUIDE C,CURSOR	2	2	3
	2AR07110	REAR GUIDE C,CURSOR	2	2	3
	2AR07120	LID A,CURSOR	2	2	3
◉	2AR07130	COVER,CASSETTE	2	2	3
	2AR07140	LEFT RAIL,CASSETTE	2	2	2
◉	2AR07150	GROUND PLATE,CASSETTE	2	2	3
	2AR07160	MOUNT,CASSETTE STOPPER	2	2	3
	2AR07170	MOUNT,CASSETTE SWITCH	2	2	16
	2AR07180	RETAINER M4	6	6	3
	2AR07190	SHAFT,CASSETTE PULLEY	4	4	3
	2AR07200	UPPER HOUSING,PAPER FEED	2	2	4
	2AR07210	LOWER HOUSING,PAPER FEED	2	2	4
◉	2AR07220	PULLEY,PAPER FEED	2	2	4
◉	2AR07230	PULLEY,SEPARATION	2	2	4
◉	2AR07240	PULLEY,LEADING FEED	2	2	4

• Parts with "◉" indicates the Service parts.

SP	Part. No.	Description	Quantity 230V	Quantity 240V	Fig. No.
	2AR07250	SHAFT,PAPER FEED	2	2	4
	2AR07260	SHAFT,SEPARATION	2	2	4
	2AR07270	SHAFT,LEADING FEED	2	2	4
	2AR07280	SUPPORT PLATE,LEADING FEED PULLEY	2	2	4
	2AR07290	REINFORCEMENT,LEADING FEED SUPPORT PLATE	2	2	4
	2AR07300	WEIGHT,LEADING FEED PULLEY	2	2	4
	2AR07310	LEVER,SEPARATION PULLEY RELEASE	2	2	4
◉	2AR07320	COUPLING,PAPER FEED	2	2	15, *22*
	2AR07330	SHAFT,PRIMARY PAPER FEED CLUTCH	2	2	15, *22*
	2AR07340	LEVER A,CURSOR	2	2	3
◉	2AR07350	SPRING,SEPARATION PULLEY	2	2	4
	2AR07400	FRONT MOUNT,PAPER FEED GUIDE	1	1	2
	2AR07410	REAR MOUNT,PAPER FEED GUIDE	1	1	2
◉	2AR07420	ROLLER,VERTICAL CONVEYING	2	2	6
	2AR07430	LOWER GUIDE,FEED	1	1	6
	2AR07440	LEFT GUIDE,VERTICAL CONVEYING	1	1	6
	2AR07470	LOWER LEFT GUIDE,VERTICAL CONVEYING	1	1	5
	2AR07480	FRAME,DESK DRIVE	1	1	15
◉	2AR07520	COVER,VERTICAL CONVEYING	1	1	5
	2AR07540	RETAINING PIN,VERTICAL CONVEYING	1	1	5
	2AR07570	SUPPORT PLATE,CLUTCH SHAFT	1	1	15, *22*
	2AR07580	LOWER SUPPORT PLATE,CLUTCH SHAFT	1	1	15, *22*
	2AR07590	GUIDE,VERTICAL CONVEYING	1	1	5
	2AR07600	SHAFT,VERTICAL CONVEYING	1	1	5
	2AR07610	STOPPER,TRAILING EDGE DETECTION	2	2	3
	2AR07620	PROTECTING PLATE,CASSETTE WIRE	2	2	3
	2AR07630	LID,TRAILING EDGE DETECTION PLATE	2	2	3
	2AR07640	ACTUATOR,PAPER EMPTY	2	2	4
	2AR07650	HOLDER,ACTUATOR	2	2	4
	2AR07660	GUIDE FILM,SEPARATION PULLEY	2	2	4
	2AR07670	REINFORCEMENT,PRIMARY PAPER FEED	2	2	4
	2AR07690	STOPPER,SUPPORT PLATE	2	2	4
◉	2AR07700	BUSHING,PRIMARY PAPER FEED	2	2	15, *22*
	2AR07710	MOUNT,PAPER FEED DRAWER	2	2	16
	2AR07720	COVER,CASSETTE RAIL	1	1	15, *22*
	2AR07730	HOLDER,SWITCH	1	1	6
◉	2AR07790	GROUND PLATE,PRIMARY PAPER FEED	2	2	4
◉	2AR07800	PULLEY,CASSETTE RAIL	8	8	2
	2AR07810	FRONT PIN,CASSETTE RAIL	4	4	2
	2AR07820	REAR PIN,CASSETTE RAIL	4	4	2

SP	Part. No.	Description	Quantity 230V	Quantity 240V	Fig. No.
	2AR07830	UPPER GUIDE,VERTICAL CONVEYING	1	1	6
	2AR07840	GUIDE,DESK CONVEYING	1	1	6
	2AR07850	COVER,INTERLOCK SWITCH	1	1	2
	2AR07860	SPONGE,COVER CASSETTE	2	2	3
	2AR07870	*FILM,VERTICAL CONVEYING*	*1*	*1*	*6*
◉	2AR08030	SHAFT,DRUM	1	1	11
	2AR09010	FRONT FRAME,IMAGE FORMATION	2	2	11
	2AR09020	REAR FRAME,IMAGE FORMATION	2	2	11
◉	2AR09030	MOUNT BASE,RAIL	1	1	2
	2AR09050	RAIL,IMAGE FORMATION	1	1	2
	2AR09060	FILM,LIGHT SHIELD	1	1	11
	2AR09070	FRONT COVER,IMAGE FORMATION	1	1	11
	2AR09160	RAIL,MC	1	1	11
◉	2AR10060	TERMINAL BASE,MAIN CHARGER	1	1	12
◉	2AR10070	SHEET,MAIN CHARGER TERMINAL BASE	1	1	12
	2AR10080	MOUNT BASE,CLEANING LAMP	1	1	12
	2AR10100	FILTER,DUST SHIELD	1	1	2
	2AR12060	MOUNT BASE,DF HINGE	2	2	8
	2AR12070	COVER SCANNER PCB	1	1	8
◉	2AR12100	FRONT WIRE,SCANNER	1	1	9
	2AR12110	ADJUSTING PLATE,SCANNER WIRE	2	2	9
	2AR12120	SHAFT,SCANNER DRIVE	1	1	9
	2AR12130	MOUNT,ORIGINAL DETECTION SENSOR	1	1	9
	2AR12140	COVER SCANNER ROM	1	1	8
	2AR12150	MOUNT,SCANNER MOTOR	1	1	9
	2AR12160	MOUNT,DF CONNECTOR	1	1	8
◉	2AR12180	REAR WIRE,SCANNER	1	1	9
◉	2AR12200	FILM,FFC	1	1	9
	2AR12210	FILM,GLASS DUST SHIELD	1	1	8
	2AR12540	COVER,ISU	1	1	8
◉	2AR12550	GROUND PLATE,LENS MOUNT	2	1	8
◉	2AR12560	GROUND PLATE,CCD MOUNT	2	2	8
◉	2AR12570	GROUND PLATE,MOTOR MOUNT	1	1	9
◉	2AR12580	GROUND PLATE,ISU MOUNT	1	1	8
	2AR14020	HOUSING,DEVELOPING	2	2	11
	2AR14040	LEFT SPIRAL,DEVELOPING	1	1	11
	2AR14050	RIGHT SPIRAL,DEVELOPING	1	1	11
	2AR14110	GEAR 16,MAGNET ROLLER	1	1	11
	2AR14130	FRONT SPONGE B,LID DEVELOPING	1	1	11
	2AR14140	FRONT SPONGE C,LID DEVELOPING	1	1	11

• Parts with "◉" indicates the Service parts.

SP	Part. No.	Description	Quantity 230V	Quantity 240V	Fig. No.
	2AR14160	SPACER,TONER SENSOR	1	1	11
	2AR14170	FRONT LID,DEVELOPING	1	1	11
	2AR14200	FRONT SPONGE,DEVELOPING	1	1	11
	2AR14210	RIGHT SPONGE,DEVELOPING	1	1	11
	2AR14250	SEAL,DEVELOPING	1	1	11
	2AR14260	SPONGE A,COVER DOCTOR BLADE	2	2	11
	2AR14270	SPONGE B,COVER DOCTOR BLADE	2	2	11
	2AR14280	UPPER SPONGE,LID DEVELOPING	1	1	11
	2AR14290	RIGHT FILM,DEVELOPING	1	1	11
	2AR14300	LOWER FILM,DEVELOPING	3	3	11
	2AR14310	GEAR 19,PADDLE	1	1	11
	2AR14320	UPPER LID,DEVELOPING	1	1	11
	2AR14330	LEFT SPONGE,DEVELOPING	1	1	11
	2AR14350	FRONT SPONGE E,LID DEVELOPING	1	1	11
	2AR14380	REAR BUSHING,AGITATION	2	2	11
	2AR14400	REAR SEAL,DEVELOPING	1	1	11
	2AR14410	RIGHT FRONT SPONGE,DEVELOPING	1	1	11
	2AR14430	SPONGE C,COVER DOCTOR BLADE	2	2	11
	2AR14440	LOWER SPONGE,DEVELOPING	1	1	11
	2AR14450	FRONT SEAL,MAGNET ROLLER SIDE	1	1	11
	2AR14460	REAR SEAL,MAGNET ROLLER SIDE	1	1	11
	2AR14470	SEAL,BUSHING MAGNET ROLLER	1	1	11
	2AR14480	RETAINER M3	1	1	11
	2AR14490	FRONT SPONGE F,LID DEVELOPING	1	1	11
	2AR14500	FRONT SPONGE G,LID DEVELOPING	1	1	11
	2AR14510	FRONT SPONGE H,LID DEVELOPING	1	1	11
	2AR14520	FRONT SPONGE I,LID DEVELOPING	1	1	11
	2AR15010	MOUNT BASE,CARTRIDGE	1	1	2
	2AR15020	MOVING BASE,CARTRIDGE	1	1	2
	2AR15030	MOVING BASE,CARTRIDGE DRIVE	1	1	2
◉	2AR15040	GEAR 21,TONER SUPPLY	1	1	2
◉	2AR15060	COVER,CARTRIDGE MOUNT BASE	1	1	2
	2AR15070	MOUNT,CARTRIDGE DRIVE	1	1	2
	2AR15080	LEVER,CARTRIDGE MOVING	1	1	2
◉	2AR15100	GEAR 16B,TONER SUPPLY	1	1	2
	2AR16010	BASE,CONVEYING	1	1	7
	2AR16020	FRONT FRAME,CONVEYING	1	1	7
	2AR16030	REAR FRAME,CONVEYING	1	1	7
	2AR16040	SHAFT,CONVEYING FULCRUM	1	1	7
	2AR16050	COVER,CONVEYING	1	1	7

SP	Part. No.	Description	Quantity 230V	Quantity 240V	Fig. No.
	2AR16060	SHAFT,CONVEYING HOOK	1	1	7
	2AR16070	STAY,CONVEYING	1	1	7
	2AR16080	HANDLE,CONVEYING RELEASE	1	1	7
	2AR16090	HOOK,CONVEYING	1	1	7
	2AR16130	MOUNT BASE,TRANSFER ROLLER BUSHING	2	2	7
	2AR16150	STATIC ELIMINATION PLATE,CONVEYING	1	1	7
	2AR16170	REAR DUCT,CONVEYING	1	1	2
	2AR16220	GUIDE,DUPLEX CONVEYING	1	1	7
	2AR16230	FRONT RETAINER,CONVEYING FULCRUM	1	1	7
	2AR16240	REAR RETAINER,CONVEYING FULCRUM	1	1	7
◉	2AR16250	GROUND PLATE,CONVEYING	1	1	7
◉	2AR16260	LEFT SHEET,FEED ROLLER	1	1	7
	2AR16270	FILM A,RESISTANCE	2	2	7
	2AR16280	FRONT ARM,CONVEYING	1	1	7
	2AR16290	REAR ARM,CONVEYING	1	1	7
	2AR16300	REAR REINFORCEMENT , CONVEYING FRAME	1	1	7
◉	2AR16310	FRONT SPRING,ARM CONVEYING	1	1	7
◉	2AR16320	REAR SPRING,ARM CONVEYING	1	1	7
◉	2AR16330	SPRING,CONVEYING HOOK	1	1	7
	2AR16340	FILM B,RESISTANCE	2	2	7
◉	2AR17030	FRONT BUSHING,TRANSFER ROLLER PRESSURE	1	1	7
◉	2AR17040	REAR BUSHING,TRANSFER ROLLER PRESSURE	1	1	7
	2AR17050	RIGHT GUIDE,TRANSFER	1	1	11
◉	2AR17060	FRONT SPRING,TRANSFER ROLLER	1	1	7
◉	2AR17070	TERMINAL,TRANSFER PRESSURE	1	1	7
◉	2AR17110	REAR SPRING,TRANSFER ROLLER	1	1	7
◉	2AR17130	TERMINAL,TRANSFER	1	1	7
	2AR17160	FRONT POSITIONING PLATE,TRANSFER ROLLER	1	1	2
	2AR17170	REAR POSITIONING PLATE,TRANSFER ROLLER	1	1	2
	2AR17180	FRONT HOLDER,TRANSFER GUIDE	1	1	7
	2AR18010	HOUSING,CLEANING	2	2	11
	2AR18050	SPIRAL,CLEANING	1	1	11
	2AR18060	HOUSING,RECYCLE	1	1	11
	2AR18070	SPIRAL,RECYCLE	1	1	11
	2AR18080	SPACER,DRUM	1	1	11
	2AR18100	GEAR 21,THRUST	1	1	11
◉	2AR18110	GEAR 17,SPIRAL	1	1	11
	2AR18140	SPRING,BLADE	1	1	11
◉	2AR18150	FRONT SPONGE A,CLEANING	1	1	11
◉	2AR18160	REAR SPONGE A,CLEANING	1	1	11

• Parts with "◉" indicates the Service parts.

SP	Part. No.	Description	Quantity 230V	Quantity 240V	Fig. No.
◉	2AR18170	INNER SPONGE,CLEANING	1	1	11
◉	2AR18190	LOWER SPONGE,CLEANING	1	1	11
◉	2AR18200	FRONT SPONGE,CLEANING	1	1	11
◉	2AR18210	FRONT SEAL A,CLEANING	1	1	11
◉	2AR18220	REAR SEAL A,CLEANING	1	1	11
◉	2AR18230	INNER FILM,CLEANING	1	1	11
◉	2AR18240	CLAW,SEPARATION	3	3	11
	2AR18250	MOUNT BASE,CLAW SEPARATION	3	3	11
	2AR18260	PULLEY,CLAW SEPARATION	3	3	11
	2AR18270	LEVER,PRESSURE RELEASE	1	1	11
	2AR18280	SPRING,CLAW SEPARATION	3	3	11
◉	2AR18340	SPONGE,MOUNT BLADE	2	2	11
◉	2AR18350	FRONT FILM,CLEANING	1	1	11
◉	2AR18360	REAR FILM,CLEANING	1	1	11
◉	2AR18370	SPONGE,CLEANING	2	2	11
	2AR18380	BUSHING,CLEANING	2	2	11
	2AR20010	HOUSING,FIXING	1	1	13
	2AR20020	FRONT FRAME,FIXING	1	1	13
	2AR20030	REAR FRAME,FIXING	1	1	13
◉	2AR20040	THERMISTOR,FIXING	1	1	13
◉	2AR20070	GEAR 50,HEAT ROLLER	1	1	13
◉	2AR20080	SEPARATION CLAW,HEAT ROLLER	6	6	13
	2AR20090	RIGHT REAR GUIDE,FIXING	1	1	13
	2AR20100	LEFT REAR GUIDE,FIXING	1	1	7
	2AR20171	LEFT FRONT GUIDE,FIXING	1	1	13
	2AR20180	RIGHT FRONT GUIDE,FIXING	1	1	13
	2AR20190	FRONT HOUSING,FIXING	1	1	13
	2AR20200	REAR HOUSING,FIXING	1	1	13
	2AR20210	MOUNT,HEAT ROLLER SEPARATION CLAW	1	1	13
◉	2AR20220	SPRING,HEAT ROLLER SEPARATION CLAW	6	6	13
	2AR20230	FRONT PRESSING PLATE,FIXING	1	1	13
	2AR20240	REAR PRESSING PLATE,FIXING	1	1	13
◉	2AR20260	SPRING,PRESSURE	2	2	13
	2AR20300	PIN,FIXING PRESSURE(M)	2	2	13
	2AR20320	LEFT MOUNT,FIXING DRAWER	1	1	13
	2AR20340	COVER,FIXING	1	1	13
	2AR20360	FRONT PIN,FIXING UNIT	1	1	13
	2AR20370	REAR PIN,FIXING UNIT	1	1	13
	2AR20400	RETAINING PIN,FIXING GUIDE	2	2	13
	2AR20490	COVER,PRESSURE ROLLER	1	1	13
	2AR20500	STOPPER,FIXING UNIT	2	2	13
	2AR20510	SHAFT,PRESSURE ROLLER SEPARATION CLAW	4	4	7
	2AR20520	MOVING PLATE,SEPARATION CLAW RELEASE	1	1	7
	2AR20530	FRONT LEVER,SEPARATION CLAW RELEASE	1	1	7
	2AR20540	REAR LEVER,SEPARATION CLAW RELEASE	1	1	7
	2AR20550	FULCRUM PIN,SEPARATION CLAW RELEASE	2	2	7
◉	2AR20560	THERMOSTAT 140,FIXING	1	1	13
	2AR20570	ROLLER,FIXING CLEANING	1	1	13
	2AR20580	BUSHING, FIXING CLEANING	2	2	13
	2AR20590	PLATE SPRING, FIXING CLEANING	2	2	13
◉	2AR21750	LEFT GUIDE,MIDDLE COVER	1	1	5
	2AR21770	SLIDER A,FEED SHIFT	2	2	2
	2AR21780	SLIDER B,FEED SHIFT	2	2	2
	2AR21790	SUPPORT PLATE,FEED SHIFT SLIDER	2	2	2
	2AR21820	SPACER,FEED SHIFT SLIDER	2	2	2
	2AR21840	GROUND PLATE,FEED SHIFT	1	1	16
	2AR21850	PULLEY A, FEED SHIFT SLIDER	4	4	2
	2AR21860	PULLEY B, FEED SHIFT SLIDER	4	4	2
	2AR21870	*FRONT GROUND PLATE,FEED SHIFT*	*1*		*17*
	2AR22010	MOUNT,DRIVE MOTOR	1	1	14
	2AR22020	POSITIONING PLATE,DRIVE MOTOR	1	1	14
◉	2AR22030	COUPLING,DRUM	1	1	14
	2AR22040	SHAFT,COUPLING	1	1	14
	2AR22050	POSITIONING PLATE,DRUM	1	1	14
◉	2AR22060	GEAR 67/20	1	1	14
◉	2AR22070	PULLEY,DRUM	1	1	14
◉	2AR22080	GEAR 82/35	1	1	14
◉	2AR22090	GEAR CLEANING DRIVE	1	1	14
◉	2AR22100	GEAR 53/37	1	1	14
◉	2AR22110	GEAR 62/46	1	1	14
	2AR22120	MOUNT,BYPASS JOINT	1	1	14
	2AR22130	SHAFT,BYPASS JOINT	1	1	14
	2AR22140	MOUNT DUPLEXSHAFT	1	1	14
◉	2AR22160	SPRING,FIXING TENSION	1	1	14
	2AR22280	SHAFT,FIXING DRIVE	1	1	14
	2AR22300	SHAFT,CLEANING DRIVE	1	1	14
	2AR22310	SHAFT,DEVELOPING DRIVE	1	1	14
	2AR22370	SHAFT,DUPLEX DRIVE	1	1	14
◉	2AR22390	GEAR 39/25 EJECT	1	1	15, *22*
◉	2AR22440	BELT,DRUM	1	1	14

• Parts with "◉" indicates the Service parts.

SP	Part. No.	Description	Quantity 230V	Quantity 240V	Fig. No.
	2AR22520	JOINT FIX	1	1	14
◉	2AR22550	MOUNT EJECT GEAR	1	1	15, *22*
◉	2AR22570	SPRING,DEVELOPING DRIVE	1	1	14
	2AR22590	TENSION PLATE,DRUM	1	1	14
◉	2AR22600	SPRING,DRUM TENSION	1	1	14
	2AR23010	DUCT A,COOLING	1	1	10
	2AR23020	DUCT B,COOLING	1	1	10
	2AR23040	MOUNT,COOLING DUCT	1	1	10
	2AR26020	LOWER SHIELD	1	1	16
	2AR26030	UPPER SHIELD	1	1	16
	2AR26050	MOUNT,ENGINE PCB	1	1	16
	2AR26060	RIGHT MOUNT,FIXING DRAWER	1	1	17
	2AR26070	PIN,FIXING DRAWER(M)	2	2	17
	2AR26100	MOUNT,INLET(230)	1	1	16
	2AR26110	MOUNT,INTERLOCK SW	1	1	2
	2AR26120	WORK PLATE,INTERLOCK SW	1	1	2
	2AR26130	MOUNT,DRAWER	1	1	16
	2AR26140	SHAFT,INTERLOCK SW	1	1	2
	2AR26150	MOUNT PCB,FEED SHIFT	2	2	16
◉	2AR26250	LID,PRINTER OUTPUT	1	1	16
	2AR26271	MOUNT,OPTION CONNECTOR(EXP)	1	1	16
◉	2AR26290	LID FAX,SWITCH	1	1	16
	2AR26310	MOUNT,TOTAL COUNTER	1	1	17
	2AR26340	MOUNT,DECK CONNECTOR	1	1	16
	2AR26350	MOUNT,POWER SOURCE PCB	1	1	16
	2AR26360	GROUND PLATE,SCANNER UNIT	8	8	8, 16
	2AR26370	GROUND PLATE,LCD	1	1	17
	2AR26380	GROUND PLATE,DF	1		1
	2AR26390	REAR GROUND PLATE,COVER	1		1
◉	2AR27010	SWITCH,MAIN	1	1	17
◉	2AR27031	LAMP,CLEANING LAMP	1	1	12
◉	2AR27040	SWITCH,INTERLOCK	1	1	2
◉	2AR27090	SWITCH,REGISTRATION	1	1	6
	2AR27120	IC,SIMM16M	1	1	16
	2AR27220	WIRE,CASSETTE UNIT	2	2	3
	2AR27240	WIRE,POWER SOURCE OUTPUT	1	1	16
	2AR27250	WIRE,IMAGE FORMATION	1	1	11
	2AR27260	WIRE,FIXING UNIT	1	1	13
	2AR27280	WIRE,DRIVE MOTOR	1	1	18
	2AR27290	WIRE,MAIN SWITCH	1	1	19

SP	Part. No.	Description	Quantity 230V	Quantity 240V	Fig. No.
	2AR27301	WIRE,LCD	1	1	17
	2AR27330	WIRE,PAPER FEED	1	1	18
	2AR27340	WIRE,SCANNER PCB	1	1	8
	2AR27360	WIRE,TRANSFER HIGH VOLTAGE	1	1	7
	2AR27380	JUNCTION WIRING,RESISTANCE SWITCH	1	1	6
	2AR27410	WIRE MMD		1	16
	2AR27422	*WIRE,SCANNER DRIVE PCB*	*1*	*1*	*8*
	2AR27430	WIRE,PRIMARY PAPER FEED UNIT	2	2	4
	2AR27440	WIRE,OPTION	1	1	16
	2AR27470	WIRE,SCANNER MOTOR	1	1	8
	2AR27480	WIRE,MAIN HIGH VOLTAGE	1	1	12
◉	2AR27490	WIRE,GRID	1	1	12
	2AR27511	WIRE,LSU	1	1	16
	2AR27520	WIRE,SCANNER SWITCH	1	1	8
	2AR27540	JUNCTION WIRING 3,FEED SWITCH	1	1	6
	2AR27550	JUNCTION WIRING 2,FEED SWITCH	1	1	6
	2AR27560	JUNCTION WIRING 1,FEED SWITCH	1	1	6
	2AR27570	WIRE,ORIGINAL DETECTION SENSOR	1	1	9
	2AR27580	WIRE,SCANNER POWER SOURCE	1	1	8
	2AR27590	WIRE,FINISHER GND	1	1	16
	2AR27600	JUNCTION WIRING,PRIMARY PAPER FEED UNIT	2	2	16
	2AR27610	WIRE B,FIXING UNIT	1	1	13
	2AR27620	DIODE,DEVELOPING SEAL	2	2	11
	2AR27630	SHIELD,HIGH VOLTAGE WIRE	1	1	12
◉	2AR27640	FILM,CLEANING LAMP	1	1	12
	2AR27650	WIRE,INVERTER	1	1	9
	2AR27670	CORE 6-13X28	1	1	10, *19*
	2AR27710	*CORE 15-26X13*	*1*		*16*
	2AR27720	*CORE 8-18X13*	*3*		*8, 18, 19*
	2AR27730	*CORE 10-20X10*	*1*		*8*
◉	2AR28070	POWER SOURCE PCB(200)	1	1	16
◉	*2AR28152*	*SCANNER DRIVE PCB*	*1*	*1*	*8*
◉	*2AR68014*	*IC,ROM MAIN SP*	*1*	*1*	*16*
◉	*2AR68024*	*IC,ROM ENGINE SP*	*1*	*1*	*16*
◉	*2AR68032*	*IC,ROM SCANNER SP*	*1*	*1*	*8*
◉	*2AR68062*	*IC,ROM OPERATION UNIT 1 SP (EUR)*	*1*	*1*	*23*
◉	*2AR68072*	*IC,ROM OPERATION UNIT 2 SP (EUR)*	*1*	*1*	*23*
◉	2AR68080	LEFT CLEANER RESISTANCE ASS'Y	1	1	7
◉	2AR68090	RIGHT CLEANER FEED ASS'Y	1	1	6
◉	2AR68100	LEFT CLEANER FEED ASS'Y	1	1	7

• Parts with "◉" indicates the Service parts.

SP	Part. No.	Description	Quantity 230V	Quantity 240V	Fig. No.
	2AR68110	COVER,OPERATION UNIT	1	1	17
	2AR68140	LEFT COVER,OPERATION UNIT(METRIC)	1	1	17
	2AR68150	CENTER COVER,OPERATION UNIT	1	1	17
	2AR68180	LEFT SHEET,OPERATION UNIT(METRIC)	1	1	17
	2AR68210	CENTER SHEET,OPERATION UNIT(METRIC)	1	1	17
	2AR68220	KEYTOP,EXPOSURE	1	1	17
	2AR68230	COVER,DATA	1	1	17
	2AR68240	KEYTOP,TEN KEY	1	1	17
	2AR68270	KEYTOP STOP CLEAR(METRIC)	1	1	17
	2AR68300	KEYTOP,PRINT(METRIC)	1	1	17
	2AR68330	KEYTOP,RESET(METRIC)	1	1	17
	2AR68340	RIGHT COVER,OPERATION UNIT	1	1	17
	2AR68370	CENTER LABEL,OPERATION UNIT(METRIC)	1	1	17
	2AR68380	KEYTOP,PREHEAT	1	1	17
◉	2AR68390	OPERATION UNIT PCB	1	1	17
◉	2AR68401	PCB MAIN PCB ASS'Y SP	1	1	16
◉	2AR68411	PCB SCANNER ASS'Y SP	1	1	8
	2AR68420	SPRING,OPERATION UNIT COVER	1	1	17
	2AR68431	*ISU,ASS'Y*	*1*	*1*	*8*
◉	2AR82020	SET,DRUM(EUR)	2	2	11
◉	2AR93010	PARTS,IMAGE FORMATION ASS'Y(SP)	1	1	11
◉	2AR93020	PARTS,CHARGE ASS'Y(SP)	1	1	11
◉	2AR93030	PARTS,SCANNER UNIT ASS'Y(SP)	1	1	9
◉	2AR93072	PARTS,FIXING ASS'Y 230(SP)	1	1	13
	2AR93080	PARTS,RECYCLE ASS'Y(SP)	1	1	11
◉	2AR93090	PARTS,COVER DOCTOR BLADE(SP)	2	2	11
◉	2AR93100	PARTS,BLADE CLEANING(SP)	1	1	11
◉	2AR93110	PARTS,LOWER SEAL CLEANING,SP	1	1	11
◉	2AR93121	PARTS,ROLLER HEAT(SP)	1	1	13
◉	2AR93130	PARTS,ROLLER PRESSURE(SP)	1	1	13
◉	2AR93181	PARTS,HEATER M FIXING 220-240(SP)	1	1	13
◉	2AR93191	PARTS,HEATER S FIXING 220-240(SP)	1	1	13
◉	2AR93200	PARTS,MOTOR MAIN(SP)	1	1	14
◉	2AR93230	PARTS,OPERATION UNIT METRIC(SP)	1	1	17
◉	2AR93240	PARTS,MOTOR LIFT CASSETTE(SP)	2	2	15, *22*
◉	2AR93260	PARTS,HIGH VOLTAGE PCB(SP)	1	1	17
◉	2AR93270	PARTS,LCD PCB(SP)	1	1	17
◉	2AR93280	PARTS,MOTOR SCANNER(S P)	1	1	9
◉	*2AS04020*	*FRONT COVER(EUR)*	*1*	*1*	*1*
◉	*2AS07010*	*PULLEY 32,VERTICAL CONVEYING*	*2*	*2*	*22*

SP	Part. No.	Description	Quantity 230V	Quantity 240V	Fig. No.
◉	*2AS07020*	*BELT 177,VERTICAL CONVEYING*	*1*	*1*	*22*
◉	*2AS24030*	*OPERATION UNIT (METRIC)*	*1*	*1*	*17*
	2AS27010	*WIRE,MAIN SWITCH*	*1*	*1*	*19*
	2AS27020	*WIRE,PAPER FEED*	*1*	*1*	*18*
◉	*2AS28010*	*LCD PCB*	*1*	*1*	*17*
◉	*2AS68010*	*OPERATION UNIT PCB*	*1*	*1*	*17*
	20305071	LABEL,CAUTION CONTACT GLASS	1	1	8
	20305130	LABEL L,HIGH TEMPERATURE CAUTION(EXP)	1	1	13
◉	28801300	BUSING, PAPER FEED	4	4	7
	29705100	CAUTION LABEL,DRUM	1	1	7
◉	29717220	PRESSING SPRING B,SB	2	2	7
◉	29721040	GEAR,24 SB	1	1	14
◉	29806810	BUSHING,6 REGISTRATION	6	6	4
◉	29807070	GEAR 28,BYPASS A	1	1	13
	29812291	CUSHION,CONTACT GLASS	9	9	9
	29912420	HOLDER,WIRE ROPE	2	2	9
◉	29927231	POWER CODE AS(240)		1	16
	3A105020	SEAL ON/OFF	1	1	21
◉	*3A206260*	*COVER,BYPASS TRAY*	*1*	*1*	*1*
	33302080	MOUNT M3	2	2	11
	33404220	FRONT PIN,COVER HINGE	2	2	1
◉	33420210	BEARING,HEAT ROLLER	2	2	13
◉	33420220	BUSHING,HEAT ROLLER	2	2	13
◉	33906070	TORQUE LIMITER,PAPER FEED	2	2	4
◉	33906140	SWITCH,VERTICAL CONVEYING	3	3	6
◉	33906160	GEAR 16,PAPER FEED	2	2	4
	33906630	STOPPER 5,RING	1	1	5
	33906640	RIGHT SPRING,FEED RELEASE	1	1	5
◉	33906660	RIGHT PULLEY,FEED	4	4	5
	33906670	RIGHT HOOK,FEED RELEASE	4	4	5
	33906680	RIGHT HANDLE,FEED RELEASE	1	1	5
◉	33907100	RACK,CASSETTE	4	4	3
	33907110	TERMINAL,PAPER SIZE PCB	2	2	3
	33907170	DETECTION PLATE,PAPER SIZE	2	2	3
◉	33907210	CUSHION,CASSETTE WORK PLATE	4	4	3
◉	33912150	PULLEY,WIRE	8	8	9
	33914190	TONER SENSOR	1	1	11
◉	33915190	TONER MOTOR	1	1	2
◉	33920130	STOPPER,HEAT ROLLER	2	2	13
◉	33922330	GEAR 30,IDLE	3	3	14

• Parts with "◉" indicates the Service parts.

SP	Part. No.	Description	Quantity 230V	Quantity 240V	Fig. No.
	33927450	RETAINING PIN,DRAWER	8	8	16
◉	33928111	SIZE DETECTION PCB	2	2	3
◉	33960020	HEATER,CASSETTE (240)	1	1	21
◉	34806040	LOWER BUSHING,PAPER FEED	2	2	4
◉	34806140	STOPPER 4	12	12	4, 5, 7
◉	34806150	STOPPER 5	8	8	5, 6, 9, 15, *22*
	34806181	SHAFT,VERTICAL CONVEYING	2	2	5
	34806480	STOPPER 6	2	2	6
◉	34820310	STATIC ELIMINATOR,HEAT ROLLER	1	1	13
◉	34821100	STATIC ELIMINATOR,EJECT	1	1	7
◉	34827220	TOTAL COUNTER	1	1	17
◉	34827250	FAN ND,COOLING	2	2	10
	34901080	POWER INLET ASS'Y	1	1	16
◉	34907150	PULLEY,CASSETTE	4	4	3
	34909050	FRONT GROUND PLATE,DRUM DRIVE	1	1	11
	34922570	GEAR 23,DEVELOPING	2	2	11
◉	34922590	SPRING,DRUM DRIVE	1	1	14
◉	34927100	FAN B,COOLING	1	1	2
	35302470	STRAP A,MACHINE RELEASE	1	1	5
	35322020	GEAR 20,PAPER FEED DRIVE	1	1	11
◉	35327400	SWITCH,FEED	5	5	4, 8
◉	35621150	BELT 224,FEED SHIFT DRIVE	1	1	9
◉	35911450	CONTACT GLASS,ADF	1	1	8
◉	35912010	CONTACT GLASS	1	1	8
◉	35912060	PULLEY,SCANNER DRUM	2	2	9
◉	35912200	STANDARD PLATE,SHADING	1	1	8
◉	35912210	SPRING,MIRROR HOLDER	2	2	9
◉	35912230	REAR ORIGINAL SIZE INDICATOR (METRIC)	1	1	8
◉	35912340	PULLEY,SCANNER DRIVE	1	1	9
	35912360	GUIDE FFC2	1	1	9
◉	35912450	LABEL,ORIGINAL SIZE INDICATOR (METRIC)	1	1	8
◉	35912490	FRONT ORIGINAL SIZE INDICATOR	1	1	8
◉	35912531	SPONGE,ORIGINAL SIZE INDICATOR	1	1	8
◉	35920130	BEARING,PRESSURE	2	2	13
◉	35927290	SENSOR,ORIGINAL DETECTION	1	1	9
◉	*35968010*	*FLASH JIG PCB*	*1*	*1*	*23*
	36512430	BASE RUBBER,SCANNER SECTION	4	4	9
	36527090	SHIELD 60,GASKET	1		10
◉	36706530	UPPER GEAR 16,REGISTRATION	1	1	14
◉	36720493	CLAW,PRESS ROLLER	4	4	7

SP	Part. No.	Description	Quantity 230V	Quantity 240V	Fig. No.
◉	36722860	GEAR 18	2	2	14
◉	36915350	GEAR 25,DEVELOPING	4	4	15, *22*
	41529121	SOCKET ASS'Y KEY COUNTER	1	1	21
◉	45727313	IDLE GEAR,FIXING UNIT	8	8	14, 15, *22*
◉	45727501	GEAR,TONER FEED ROLLER	1	1	7
◉	45727502	GEAR,TONER MOTOR	1	1	2
◉	45727505	GEAR 50T	1	1	14
◉	45729206	GEAR,TONER FEED ROLLER	2	2	4
◉	48128807	PIN,FRAME	2	2	7
	49028113	BUSHING 6-19,DEV.UNIT	2	2	11
	49628105	RECEIVER,MAGNET	2	2	1
	60904280	ORIGINAL POCKET	1	1	20
	60904310	HINGE,ORIGINAL HOLDER	2	2	20
◉	60907170	CUSHION,CASSETTE R	4	4	3
◉	60912270	BEARING,688ZZ	2	2	9
◉	61706750	SPRING,BYPASS GUIDE	2	2	10
◉	61714140	GEAR,DEVELOPING SLEEVE	2	2	14, 15, *22*
◉	61727540	INTERLOCK SWITCH B	3	3	2, 15, *22*
◉	63516160	SPRING,TRANSFORMER TERMINAL	2	2	12
◉	63814060	GEAR 20,AGITATION	1	1	11
◉	63818250	REAR BUSHING,TONER DISPOSAL ROLLER	2	2	11
	63827080	FERRITE CORE	1	1	16
◉	65009050	SPRING,DEVELOPING ROCK	2	2	7
◉	65026152	GROUND PLATE,TONER MOTOR	2	2	16
	65027470	CORE,7-15X18	*4*	2	8, *19*
	65027480	*CORE,9-20X32*	*2*		*8, 10*
	65904230	HOLDER,SAFETY SWITCH	1	1	1
◉	65914120	GEAR 18,IDLE DEVELOPING	2	2	3
◉	66007120	SPRING,CURSOR C	2	2	3
	66012180	ACTUTATION PLATE,ORIGINAL DETECTION SWITCH	1	1	20
	66012300	SLIDER,SCANNER	8	8	9
◉	66015270	PULLEY 10,TONER RECYCLE	1	1	14
	66060010	COVER,KEY COUNTER	1	1	21
	66060021	RETAINER,KEY COUNTER COVER	1	1	21
	66060030	RETAINER,KEY COUNTER	1	1	21
	66060040	MOUNT,KEY COUNTER	1	1	21
	66069781	SET PARTS ,KEY COUNTER	1	1	21
◉	66106080	SPRING,PAD	2	2	3
◉	66106610	SPRING,FEED	4	4	5
◉	66107100	PAD,CASSETTE	2	2	3

• Parts with "◉" indicates the Service parts.

SP	Part. No.	Description	Quantity 230V	Quantity 240V	Fig. No.
◉	66127010	SWITCH,COVER OPEN	2	2	16
	66212080	MOUNT,SCANNER SWITCH	1	1	9
	66727410	*SHIELD GASKET,9X3X50*	*1*		*16*
◉	67322230	BUSHING 8	17	17	6, 14
	68305100	CAUTION LABEL,HIGH TEMPERATURE(JPN)	1	1	13
	68314080	GEAR,DEVELOPING PADDLE	2	2	14
◉	68320310	SPRING,SEPARATION CLAW	4	4	7
	69312100	BASE,MAT	1	1	20
◉	69312110	PLATE SPRING,ORIGINAL HOLDER	2	2	20
◉	71815110	IDLE GEAR 18,SUB UNIT	1	1	6
◉	71821390	IDLE GEAR 48	1	1	2
◉	72112520	TENSION SPRING,SCANNER WIRE	2	2	9
◉	72127100	PI SWITCH,OPTICAL SECTION	1	1	9
	72320210	LOWER GEAR, EJECT IDLE	1	1	11
◉	72321350	GEAR 30, FD EJECT IDLE	3	3	14, 15, *22*
	72518120	PIN,TANK RELEASE	1	1	5
◉	72622040	GEAR 25,FEED	5	5	14, 15, *22*
	72626210	BUSHING,24X54	2	2	9, 17
	72919050	GEAR 12/15,RECYCLE SECTION	1	1	11
◉	73818100	SPRING, BLADE THRUST	2	2	2
◉	74322340	GEAR 32,DUPLEX	1	1	14
	74327180	PIN,CONNECTOR	2	2	16
◉	74718091	BUSHING CLEANING UNIT	2	2	15, *22*
◉	75607340	GEAR 45,PF LOOP	1	1	14
◉	75712080	MIRROR HOLDER	4	4	9
◉	75714120	GEAR 24,DEVELOPING UNIT	1	1	14
	76610320	PIN TENSION PULLEY	6	6	9, 10
◉	77502090	LID FINISHER CABLE	1	1	16
◉	77706492	FRONT PRESSING SPRING	1	1	7
	77906210	CASSETTE STOPPER	2	2	3
	77906291	HOLDER,CASSETTE STOPPER	2	2	2
	78802140	MAGNET EJECT SECTION	2	2	1
	79904140	ORIGINAL HOLDER SPACER	2	2	20
	82142540	KEY COUNTER	1	1	21
	B1304060	BINDING SCREW BVM4X6 (BLACK)	2	2	21
	B2303060	COUNTER-SUNK HEAD SCREW BFHM3X6 (BLACK)	2	2	21
	B4104060	TRIPLE SCREW M4X6(CHROMIUM)	1	1	21
	B4304060	TRIPLE SCREW M4X6 (BLACK)	4	4	21
	B4304100	TRIPLE SCREW M4X10 (BLACK)	2	2	21
	B4304200	TRIPLE SCREW M4X20(BLACK)	1	1	21

SP	Part. No.	Description	Quantity 230V	Quantity 240V	Fig. No.
	C2303000	NUT BNM3 (BLACK)	1	1	21
	G3306780	BEARING FLAW678ZZA	1	1	14
	J0040910	SOCKET,MINI MATENLOCK,(PLATIN)170365-1	1	1	18
	J0045010	RECEPTACLE 1P,MINI MATENLOCK,172156-1	1	1	16
	J0045910	PIN,MINI MATENLOCK,(PLATIN) 170363-1	1	1	16
	J0066120	MINI-DRAWER,179323-8(AMP)	1	1	13
	J0067120	MINI-DRAWER,179388-8(AMP)	1	1	19
	J0070010	POSITIVE CONNECTOR,#187,172074-1	1	1	13
	J0070900	POSITIVE CONTACTOR,#187,170330-1	6	6	18, 19
	J0070910	POSITIVE CONTACTOR,#187,170331-1	2	2	13
	J0073050	POSITIVE CONNECTOR,#187,BLUE,V0,173974-6(AMP)	1	1	13
	J0074010	POSITIVE CONNECTOR,#250,172076-1	3	3	19
	J0074900	POSITIVE CONTACTOR,#250,170333-1	8	8	19
	J0074910	POSITIVE CONTACTOR,#250,170334-1	4	4	19
	J0075010	POSITIVE CONNECTOR,#250,(YELLOW),172076-4	3	3	19
	J0076010	POSITIVE CONNECTOR,#250,(GREEN),172076-5	2	2	19
	J0077010	POSITIVE CONNECTOR,#250,(BLUE),172076-6	4	4	19
	J0111120	RECEPTACLE 12P,MINI MATENLOCK,VO,17162-1	1	1	19
	J0140020	RECEPTACLE ,173977-2(AMP)	1	1	19
	J0140040	RECEPTACLE MT 4P,173977-4	2	2	19
	J0140090	RECEPTACLE MT 9P,173977-9	11	11	18
	J0140100	RECEPTACLE,1-173977-0(AMP)	3	3	18
	J0140120	RECEPTACLE,1-173977-2(AMP)	4	4	8
	J0144020	CASE,175694-2(AMP)	2	2	13, 19
	J0144050	*CASE,175694-5(AMP)*	*1*	*1*	*19*
	J0144100	CASE,1-175694-0(AMP)	1	1	18
	J0149080	CONNECTOR,HOLDER,175133-8(AMP)	2	2	13, 19
	J0149200	CONNECTOR,HOLDER,2-175133-0(AMP)	1	1	18
	J0149240	CONNECTOR,HOLDER,2-175133-4(AMP)	2	2	8
	J0150020	RECEPTACLE,175778-2(AMP)	4	4	13, 18, 19
	J0150040	RECEPTACLE,175778-4(AMP)	1	1	13
	J0150050	*RECEPTACLE,175778-5(AMP)*	*1*	*1*	*19*
	J0150060	RECEPTACLE,175778-6(AMP)	2	2	18
	J0150900	CONTACTOR,175161-1(AMP)	27	27	13, 18, 19
	J0161020	POSITIVE,RECEPTACLE,174712-1(AMP)	3	3	18, 19
	J0167020	TAB-HOUSING,#187,BLUE,176448-6(AMP)	1	1	13
	J0170010	PLUG,172335-1(AMP)	1	1	18
	J0220040	PLUG EL 4P,ELP-04V	2	2	19, 21
	J0220900	SOCKET EL,LLF-01T-1.3E	6	6	19, 21
	J0222900	PIN EL,LLM-01T-1.3E	4	4	19

• Parts with "◉" indicates the Service parts.

SP	Part. No.	Description	Quantity 230V	Quantity 240V	Fig. No.
	J0223040	RECEPTACLE EL 4P,ELR-04V	1	1	19
	J0241020	PLUG SM 2P,SMP-02V-BC	1	1	18
	J0241030	PLUG SM 3P,SMP-03V-BC	2	2	18
	J0241180	PLUG SM 18P,SMP-18V-BC	1	1	16
	J0242900	PIN SM,BYP-001T-0.6	3	3	18, 19
	J0243020	RECEPTACLE SM 2P,SMR-02V-B	1	1	18
	J0243030	RECEPTACLE SM 3P,SMR-03V-B	1	1	19
	J0250900	SOCKET,BHF-001T-0.8SS	23	23	16, 18
	J0260030	PLUG EH 3P,EHR-3	1	1	16
	J0260040	PLUG EH 4P,EHR-4	2	2	18
	J0260080	PLUG,EHR-8(JST)	1	1	16
	J0260100	PLUG,EHR-10(JST)	1	1	18
	J0260900	CONTACTOR,BEH-001T-P0.6(JST)	8	8	18
	J0272030	VH RECEPTACLE 3P,VHR-3N	1	1	16
	J0272040	RECEPTACLE,VH,4P,VHR-4N	1	1	16
	J0272900	CONTACTOR,BVH-21T-P1.1(JST)	6	6	16
	J0314020	PLUG 2P,5559-02P	1	1	16
	J0314120	PLUG 12P,5559-12P	1	1	16
	J0315020	RECPTACLE 2P,5557-02R	1	1	16
	J0326120	CASE,54082-1215(MOLEX)	1	1	16
	J0340900	SOCKET,MINI DRAWER,5556TL	2	2	16
	J0341900	PIN,MINI DRAWER,5558TL	2	2	16
	J0341910	PIN,MINI DRAWER,5558T2L	9	9	16
	J0361040	RECEPTACLE,3191-04R1(MOLEX)	1	1	19
	J0361910	SOCKET 1189ATL	3	3	19
	J0376110	RECEPTACLE,52484-1110(MOLEX)	2	2	8
	J0376120	RECEPTACLE,52484-1210(MOLEX)	2	2	8
	J0376130	RECEPTACLE,52484-1310(MOLEX)	1	1	8
	J0377120	RECEPTACLE,52484-1212(MOLEX)	1	1	8
	J0388460	RECEPTACLE,52918-4615(MOLEX)	1	1	8
	J0390040	RECEPTACLE,51090-0400(MOLEX)	1	1	19
	J0390060	RECEPTACLE,51090-0600(MOLEX)	1	1	16
	J0390080	RECEPTACLE,51090-0800(MOLEX)	1	1	16
	J0390090	RECEPTACLE,51090-0900(MOLEX)	1	1	16
	J0390900	CONTACTOR,50212-8100(MOLEX)	30	30	16, 19
	J0392060	RECEPTACLE,51090-0602(MOLEX)	1	1	16
	J0395040	CASE,53358-0410(MOLEX)	1	1	19
	J0418200	RECEPTACLE,QR/P8-20S-C(01)(HIROSE)	1	1	18
	J0418900	SOCKET,QR/P8-SC-121(HIROSE)	2	2	18
	J0418910	SOCKET,QR/P8-SC-111(HIROSE)	18	18	18

SP	Part. No.	Description	Quantity 230V	Quantity 240V	Fig. No.
	J0440060	PLUG,DF11-6DEP-2C(HIROSE)	1	1	19
	J0440900	PIN,DF11-EP2428PC(HIROSE)	25	25	19
	J0441080	RECEPTACLE,DF11-8DS-2C(HIROSE)	2	2	18
	J0441900	CONTACTOR,DF11-2428SC	12	12	18
	J0443040	PLUG,DF11-4DEP-2C(HIROSE)	2	2	19
	J0443160	PLUG,DF11-16DEP-2C(HIROSE)	1	1	19
	J0443280	PLUG,DF11-28DEP-2C(HIROSE)	1		18
	J0450020	PLUG,DF3-2S-2C(HIROSE)	1	1	19
	J0450900	SOCKET,DF3-2428SC(HIROSE)	2	2	19
	J0455020	CASE,DF3-2EP-2A(HIROSE)	1	1	2
	J0463080	PLUG,QR/P15-8S-C(HIROSE)	4	4	3, 4
	J0464080	RECEPTACLE,QR/P15-8S-C(02)(HIROSE)	4	4	16
	J5000050	PLUG,PHR-5(JST)	1	1	16
	J5000120	HOUSING PH 12P,PHR-12	1	1	16
	J5003030	RECEPTACLE,PHNR-03C-H(JST)	1	1	19
	J5003050	*RECEPTACLE,PHNR-05C-H(JST)*	*1*	*1*	*19*
	J5013020	RECEPTACLE,02KR-6H-PC(JST)	2	2	18
	J5013030	RECEPTACLE,03KR-6H-PC(JST)	7	7	18
	J5013040	RECEPTACLE,04KR-6H-PC(JST)	2	2	18
	J5013050	RECEPTACLE,05KR-6H-PC(JST)	1	1	18
	J5013070	RECEPTACLE,07KR-6H-PC(JST)	1	1	18
	J5013100	RECEPTACLE,10KR-6H-PC(JST)	1	1	19
	J5013120	RECEPTACLE,12KR-6H-PC(JST)	2	2	18
	J5013130	RECEPTACLE,13KR-6H-PC(JST)	1	1	18
	J5013140	RECEPTACLE,14KR-6H-PC(JST)	3	3	8, 19
	J5013150	RECEPTACLE,15KR-6H-PC(JST)	2	2	18
	J5015240	CONNECTOR HOLDER,KRWH-24C-H(JST)	1	1	18
	J5016020	CASE,BU02P-TR-PC-H(JST)	2	2	18
	J5016030	CASE,BU03P-TR-PC-H(JST)	4	4	18
	J5016070	CASE,BU07P-TR-PC-H(JST)	1	1	18
	J5080120	RECEPTACLE,PHDR-12VS(JST)	1	1	18
	J5080160	RECEPTACLE,PHDR-16VS(JST)	1	1	18
	J5080220	RECEPTACLE,PHDR-22VS(JST)	1	1	19
	J5080240	RECEPTACLE,PHDR-24VS(JST)	1	1	18
	J5080280	RECEPTACLE,PHDR-28VS(JST)	1	1	18
	J5080300	RECEPTACLE,PHDR-30VS(JST)	1	1	19
	J6730180	PLUG,XADP-18V-F(JST)	1	1	16
	J6730300	PLUG,XADP-30V-F(JST)	1	1	16
	L0001070	FAST-ON RECEPTACLE #110,24-20 (TIN),170043	1	1	19
	L4040000	CLOSE TYPE TERMINAL,0.5-1.75,CE-1	2	2	16

• Parts with "◉" indicates the Service parts.

SP	Part. No.	Description	Quantity 230V	Quantity 240V	Fig. No.
	M0207000	BINDING BAND,KB-100-1	32	32	16, 18
	M1203230	OPEN BUSHING,OCB-750	3	3	7, 16, 17
	M2104210	EDGING,EDS-2	4	4	8
	M2104220	EDGING,EDS-1717U	2	2	16
	M2104280	EDGING,EDS-25L(KITAGAWA)	1	1	16
	M2104350	EDGING,EDS-0607M(KITAGAWA)	11	11	2, 6, 9, 13
	M2105730	MINIATURE CLAMP,UAMS-07-0	5	5	12
	M2105770	CLAMP,UAMS-09-0(KITAGAWA)	6	6	17
	M2107120	BINDING BAND SG-130	5	5	6, 7, 17
	M2108120	SPACER,KGLS-4S	5	5	16
	M2108130	SPACER,KGPS-4S	1	1	17
	M2108430	SPACER,KGES-10	3	3	16, 17
	M2108860	SPACER,PHD-10(KITAGAWA)	6	6	9, 16, 17
	M2108940	SPACER,FGES-10(KITAGAWA)	1	1	17
	M2109200	LOCKING WIRE SADDLE,LWS-3S-2W	4	4	14, 16
	M2109270	WIRE SADDLE,LWS-5S-2W(KITAGAWA)	2	2	16
	M2109330	WIRE SADDLE,YMC-10-0(KITAGAWA)	24	24	2, 6, 8, 15, 16, 17, *22*
	M2109340	WIRE SADDLE,YMC-05-0(KITAGAWA)	1	1	13
	M2505180	CLAMP,GNK-3N(NIKKO)	3	3	16, 17
	M2509000	WIRE SADDLE,WS-1N	1	1	17
	M2509020	WIRE SADDLE,WS-2N	14	14	2, 14, 16, 17
	M2607010	BINDING BAND,PLT1M	62	62	8, 16, 18, 19
	M3506310	INSULATION SLEEVE,OS-110(SHINAGAWA)	1	1	19
	M7009020	WIRE SADDLE,LWS-1N-V0F(TAKEUCHI)	8	8	2, 15, 16, 17, *22*
	M7009030	WIRE SADDLE,WS-4W(TAKEUCHI)	4	4	8, 14

• Parts with "◉" indicates the Service parts.

CLASSIFICATION OF THE SCREWS IN ILLUSTRATION

REF.	ITEM #	DESCRIPTION
ADF	B4093060	PEDESTALHEAD TAP-TITE SCREW(CHROMATING)M3X06
BAA	B1003040	BINDING SCREW,CVM3X4
BAB	B1003060	BINDING SCREW CVM3X6
BAC	B1003080	BINDING SCREW M3X8
BAL	B1003050	BINDING SCREW CVM3X5
BAN	B1004060	BINDING SCREW CVM4X6
BBB	B1303050	BINDING SCREW BVM3X5 (BLACK)
BBE	B1304060	BINDING SCREW BVM4X6 (BLACK)
BBG	B1304100	BINDING SCREW BVM4X10 (BLACK)
BBM	B1304120	BINDING SCREW BVM4X12 (BLACK)
BBU	B1303140	BINDING SCREW BVM3X14 (BLACK)
BCF	B1104080	BINDING SCREW VM4X8 (CR)
BCK	B1103050	BINDING SCREW CV3X5
BGB	B1244080	BINDING SCREW WITH LOCK TVM4X8
BHA	B3023060	BINDING TAP TIGHT SCREW M3X6
BHC	B3024060	BINDING TAP-TIGHT SCREW M4X6
BHH	B3024100	BINDING TAP-TIGHT SCREW M4X10
BHN	B8013080	BINDING TAP-TIGHT SCREW M3X08
BUE	B3002060	TAPPING SCREW M2X06(B TYPE)
BUH	B8003060	BINDING TAP-TIGHT P SCREW M3X06
BVM	B1303300	BINDING SCREW BVM3X30(BLACK)
CAE	B2003100	COUNTER-SUNK HEAD SCREW FHM3X10
EAF	B3054120	TAPPING SCREW M4X12 (A TYPE)
E05	D1000500	STOP RING (E-5)
E07	D1000700	STOP RING (E-7)
E09	D1000900	STOP RING (E-9)
FBF	B3073100	COUNTER-SUNK HEAD TAPPING SCREW M3X10 (A TYPE)
GEA	B9604080	GROUNDING SCREW M4X8 (BRASS,N;)
GEC	B9603050	GROUNDING SCREW M3X5(BRASS,NI/)
GEF	B9604060	GROUNDING SCREW M4X6 (BRASS,N;)
HAD	B4003050	TRIPLE SCREW M3X05
HAG	B4000080	TRIPLE SCREW M3X8
HAI	B4004060	TRIPLE SCREW M4X06(BLACK)
HAK	B4003060	TRIPLE SEREW M3X6
HAO	B4043080	TRIPLE TAP-TITE P SCREW M3X08
HAT	B4144080	+TAP-TITE P SCREW (CHROMIUM)
HBA	B4303050	TRIPLE SCREW M3X5 (BLACK)
HBC	B4304060	TRIPLE SCREW M4X6 (BLACK)
HCA	B4104060	TRIPLE SCREW M4X6(CHROMIUM)
HCD	B4103080	TRIPLE SCREW M3X08(CHROMIUM)
HCF	B4104080	TRIPLE SCREW M4X08(CHROMIUM)
HDA	B4343060	TRIPLE TAP-TITE P SCREW M3X06(BLACK)
KAL	E0020100	SPRING PIN 2X10
KAM	E0020120	SPRING PIN 2X12
KAN	E0020140	SPRING PIN 2X14
KAO	E0020160	SPRING PIN 2X16
KAY	E0030180	SPRING PIN 3X18
KKJ	E0025250	SPRING PIN 2.5X25
NAD	C1004000	NUT NM4
NAE	C1005000	NUT NM5
RDC	D4000300	STOP RING CSTW-3
WAB	C2003080	PLAIN WASHER PWM3
WAD	C2005120	PLAIN WASHER PWM5
XCF	C2895130	SHIM 8.2-0.5T

MITA EUROPE B.V.
Hoeksteen 40, 2132 MS Hoofddorp,
The Netherlands
Phone: (020) 6540000
Home page: http://www.mita.nl,
Email: info@mita. nl

MITA NEDERLAND B.V.
Gyroscoopweg 122, 1042 AZ Amsterdam,
The Netherlands
Phone: (020) 5877200

MITA COPYSTAR (U.K.) LTD.
Mita House, Hamm Moor Lane,
Addlestone, Weybridge,
Surrey KT15 2SB, U.K.
Phone: (01932) 858266

MITA ITALIA S.P.A.
Via Marconi 8, 20041 Agrate Brianza,
Milano,Italy
Phone: (039) 65641

S.A. MITA BELGIUM N.V.
Hermesstraat 8A 1930 Zaventem, Belgium
Phone: (02) 7209270

MITA FRANCE S.A.R.L.
1 Rue Pelloutier,
77183 Croissy Beaubourg, France
Phone: (1) 60175152

MITA ESPAÑA S.A.
Edificio Mita, Avda. De Manacor Nº 2,
Urb. Parque Rozas, Apartado De Correos 76,
28230 Las Rozas, Madrid, Spain
Phone: 91-631-8392

MITA FINLAND OY
Kirvesmiehenkatu 4, 00810 Helsinki,
Finland
Phone: (09) 478 05200

© 1999 MITA INDUSTRIAL CO., LTD.

MITA (SCHWEIZ) AG
Hölzliwisen Industriestrasse 28,
8604 Volketswil, Switzerland
Phone: (01) 9461600

MITA DEUTSCHLAND GMBH
Industriestrasse 17, D-61449 Steinbach/TS,
Germany
Phone: (06171) 7005-0

MITA GMBH AUSTRIA
Eduard Kittenberger Gasse 95
A-1230 Wien, Austria
Phone: (01) 86338 210

MITA SVENSKA AB
Siktgatan 2
162 50 Vällingby, Sweden
Phone: (08) 4719999

MITA DANMARK A/S
Industrivej 11, DK-4632 Bjæverskov,
Denmark
Phone: 53671100

MITA PORTUGAL LDA.
CASCAISTOCK-Armazem nº8,
Rua das Fisgas, Alcoitão,
2765 Estoril, Portugal
Phone: 1-4602221

MITA SOUTH AFRICA(PTY) LTD.
Unit 3,"KYALAMI CRESCENT",
KYALAMI BUSINESS PARK,
1685 Midrand, South Africa
Phone: (011) 4663290

MITA COPYSTAR AMERICA, INC.
Headquarters:
225 Sand Road, P.O. Box 40008
Fairfield, New Jersey 07004-0008
U.S.A.
Phone: (201) 808-8444

MITA ASIA PACIFIC
Head office:
2-28, 1-chome, Tamatsukuri, Chuo-ku,
Osaka 540-8585, Japan
Phone: (06) 6764-3555

MITA COPIERS AUSTRALIA PTY. LTD.
P.O. Box 211, Regents Park Estate Unit 2, Block V
391 Park Road, Regents Park N.S.W. 2143,Australia
Phone: 61-2-9645-5100
Fax: 61-2-9743-7485

MITA NEW ZEALAND LTD.
1-3 Parkhead Place, Albany
P.O. Box 364,New Zealand
Auckland, New Zealand
Phone: (09) 415-4517

MITA (THAILAND) CORPORATION LTD.
9/209 Ratchada-Prachacheun Road,
Bang Sue, Bangkok 10800, Thailand
Phone: (02) 586-0333

MITA COPYSTAR SINGAPORE PTE LTD.
121 Genting Lane, 3rd. Level,
Singapore 349572
Phone: 65-7418733

MITA COPYSTAR HONG KONG LIMITED.
11/F., Mita Centre,
552-566 Castle Peak Road,
Tsuen Wan, New Territories,
Hong Kong
Phone: 852-2423-2163

MITA INDUSTRIAL CO., LTD.
2-28, 1-chome, Tamatsukuri, Chuo-ku,
Osaka 540-8585, Japan
Phone: (06) 6764-3555
Fax: (06) 6764-3981

MITA and *mita* are registered trademarks of MITA INDUSTRIAL CO., LTD.

Printed in Holland