SECTION 1

OVERALL MACHINE INFORMATION

1. SPECIFICATIONS

Configuration: Desktop

Copy Process: Dry electrostatic transfer system

Originals: Sheet/Book

Original Size: Maximum A3/11" x 17"

Copy Paper Size: Maximum
A3/11" x17" (Paper trays)
Minimum
A5/8 1/2" x 5 1/2" sideways (Paper trays)
A4/11" x 8 1/2" sideways (LCT)
A6/5 1/2" x 8 1/2" lengthwise (By-pass)

Duplex Copying: Maximum
A3/11" x 17"
Minimum
A5/8 1/2" x 5 1/2" (sideways)

Copy Paper Weight: Paper tray:
52 ~ 128 g/m^2, 14 ~34 lb
(A153, A155, and A156 copiers)
64 ~ 90 g/m^2, 17 ~ 24 lb
(A157, A159, and A160 copiers)
By-pass:
52 ~ 157 g/m^2, 14 ~42 lb
LCT:
52 ~ 128 g/m^2, 14 ~ 34 lb
Duplex copying:
64 ~ 105 g/m^2, 17 ~ 24 lb

Reproduction Ratios: 4 Enlargement and 6 Reduction

	A4/A3 Version	LT/DLT Version
Enlargement	200% 141% 122% 115%	200% 155% 129% 121%
Full size	100%	100%
Reduction	93% 82% 75% 71% 65% 50%	93% 85% 77% 74% 65% 50%

Power Source:

120V/60Hz:
More than 12 A (for North America)
220V ~ 240V/50Hz:
More than 7 A (for Europe)
220V/50Hz:
More than 7 A (for Asia)
110V/60Hz:
More than 14 A (for Taiwan)
220V/60Hz:
More than 7 A (for Saudi Arabia, Philippines)

Power Consumption:

		A153, A155, and A156 copiers		A157, A159, and A160 copiers	
		Copier Only	**Full System**	**Copier Only**	**Full System**
Maximum		1.45 KW	1.50 KW	1.45 KW	1.50 KW
Copying		1.00 KW	1.00 KW	0.80 KW	0.80 KW
Warm-up		0.90 KW	0.92 KW	0.90 KW	0.92 KW
Stand-by		0.16 KW	0.19 KW	0.15 KW	0.17 KW
Energy Saver	1	0.15 KW	0.17 KW	0.14 KW	0.16 KW
	2	0.13 KW	0.15 KW	0.12 KW	0.13 KW
	3	0.12 KW	0.14 KW	0.09 KW	0.10 KW
	4	0.11 KW	0.12 KW	0.07 KW	0.08 KW
	5	0.09 KW	0.11 KW	0.05 KW	0.06 KW
	6	0.07 KW	0.09 KW	–	–
Auto Off		0.02 KW	0.04 KW	0.02 KW	0.04 KW

NOTE: 1) Full System: Copier + ADF + Paper Tray Unit + 20 Bin S/S
2) Energy Saver: See SP1-105-002
3) Auto Off: See SP5-305

Noise Emission:

	A153, A155, and A156 copiers		A157, A159, and A160 copiers	
	Copier Only	**Full System***	**Copier Only**	**Full System***
1. Sound Power Level				
Copying	66 dB(A)	68 dB(A)	61 dB(A)	67 dB(A) (L_{WA})
Warm-up	41 dB(A)	41 dB(A)	39 dB(A)	40 dB(A) (L_{WA})
Stand-by	41 dB(A)	41 dB(A)	39 dB(A)	40 dB(A) (L_{WA})
2. Sound Pressure Level at the operator position				
Copying	58 dB(A)	57 dB(A)	54 dB(A)	56 dB(A) (L_{PA})
Warm-up	33 dB(A)	27 dB(A)	32 dB(A)	27 dB(A) (L_{PA})
Stand-by	33 dB(A)	27 dB(A)	32 dB(A)	27 dB(A) (L_{PA})

NOTE: The above measurements are to be made according to ISO 7779.
* : Full System: Copier + ADF + Paper Tray Unit +10 Bin S/S.

Dimensions:

	Width	Depth	Height
A153 copier	1030 mm (40.6")	655 mm (25.8")	606 mm (23.9")
A157 copier	900 mm (35.5")	655 mm (25.8")	606 mm (23.9")
A155 and A156 copiers	1258 mm (49.6")	655 mm (25.8")	606 mm (23.9")
A159 and A160 copiers	1128 mm (44.5")	655 mm (25.8")	606 mm (23.9")

Measurement Conditions
1) With by-pass feed table closed
2) With platen cover and copy tray attached
3) With LCT cover closed

Weight:

	Weight
A153 copier	About 70 kg (154.2 lb)
A155 copier	About 78 kg (171.9 lb)
A156 copier	About 82 kg (180.7 lb)
A157 copier	About 67 kg (147.7 lb)
A159 copier	About 75 kg (165.4 lb)
A160 copier	About 80 kg (176.4 lb)

Zoom: From 50% to 200% in 1% steps

Copying Speed (copies/minute):

	A4 sideways/ 11" x 8 1/2"	A3/11" x 17"	B4/8 1/2" x 14"
A153, A155, and A156 copiers	35	20/19	22
A157, A159, and A160 copiers	27	15/14	17

Warm-Up Time
A153, A155, and A156 copiers:
Less than 110 seconds (20°C)
A157, A159, and A160 copiers:
Less than 80 seconds (20°C)

First Copy Time:

Paper Feed Station	A4/11" x 8 1/2" (sideways)	
	A153, A155, and A156 copiers	A157, A159, and A160 copiers
1st Tray	5.2 s (except for A156)	5.9 s (except for A160)
2nd Tray	5.7 s	6.6 s
By-pass	4.8 s	5.6 s
LCT	5.0 s	5.9 s

Note: In A156 and A160 copiers, the 2nd tray in the above table is called the 1st tray (see Installation - Paper Feed Station Definition).

Copy Number Input: Ten-key pad, 1 to 999 (count up or count down)

Manual Image Density Selection: 7 steps

Automatic Reset: 1 minute is the standard setting; it can be changed to a maximum of 999 seconds or no auto reset by SP mode.

Copy Paper Capacity:

	Paper Tray	By-pass Feed	LCT
A153 copier	About 500 sheets x2	About 40 sheets	–
A155 copier	About 500 sheets x2	About 40 sheets	About 1000 sheets
A156 copier	About 500 sheets x1	About 40 sheets	About 1000 sheets
A157 copier	About 250 sheets x2	About 40 sheets	–
A159 copier	About 250 sheets x2	About 40 sheets	About 1000 sheets
A160 copier	About 250 sheets x1	About 40 sheets	About 1000 sheets

Duplex Tray Capacity [A156/A160]: 50 sheets (30 sheets for A3/11"x17" 81 ~ 105g/m^2, 21.5 ~ 27.9 lb paper)

Toner Replenishment: Cartridge exchange (415 g/cartridge)

Optional Equipment:

- Platen cover
- Document feeder
- Paper tray unit with two paper trays
- Paper tray unit with three paper trays
- 10 bin micro sorter
- 20 bin mini sorter
- 10 bin sorter stapler
- 20 bin sorter stapler
- Sorter adapter (required when installing 20 bin mini sorter, 10 bin sorter stapler, or 20 bin sorter stapler for A157, A159, and A160 copiers)
- Key counter
- Tray heater
- Optical anti-condensation heater
- Original length sensor for 11" x 15" size paper (only for LT/DLT version)
- ADS sensor for particular types of red original

2. MACHINE CONFIGURATION

2.1 COPIER

A153 copier

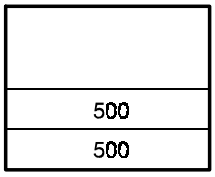

A155 copier

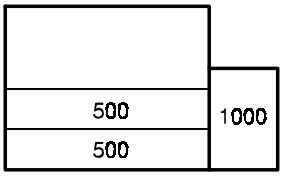

A156 copier

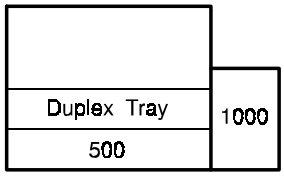

A157 copier

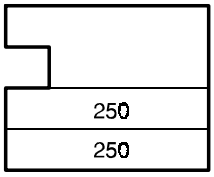

A159 copier

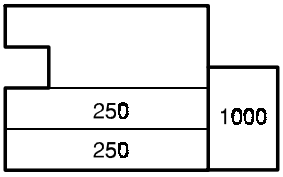

A160 copier

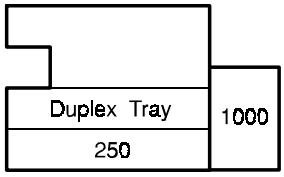

2.2 OPTIONAL EQUIPMENT

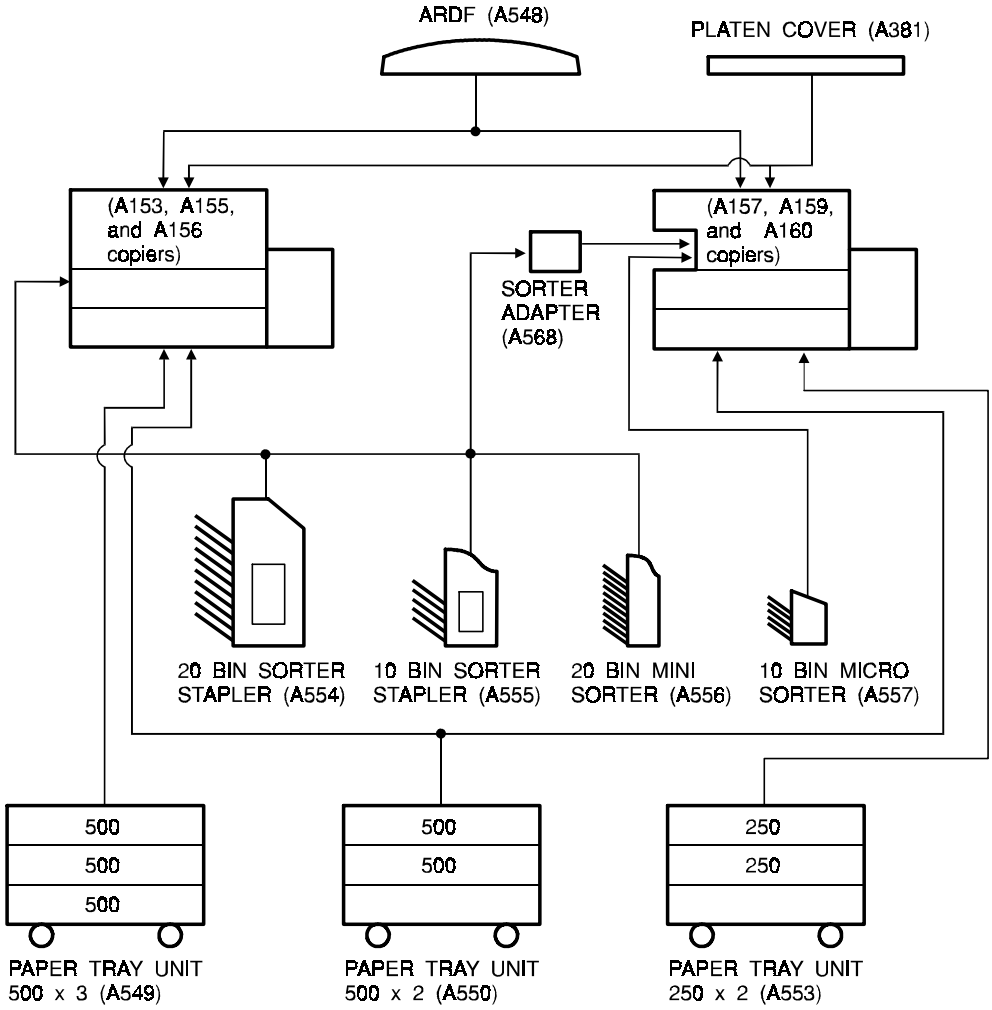

3. MECHANICAL COMPONENT LAYOUT

– A156 copier –

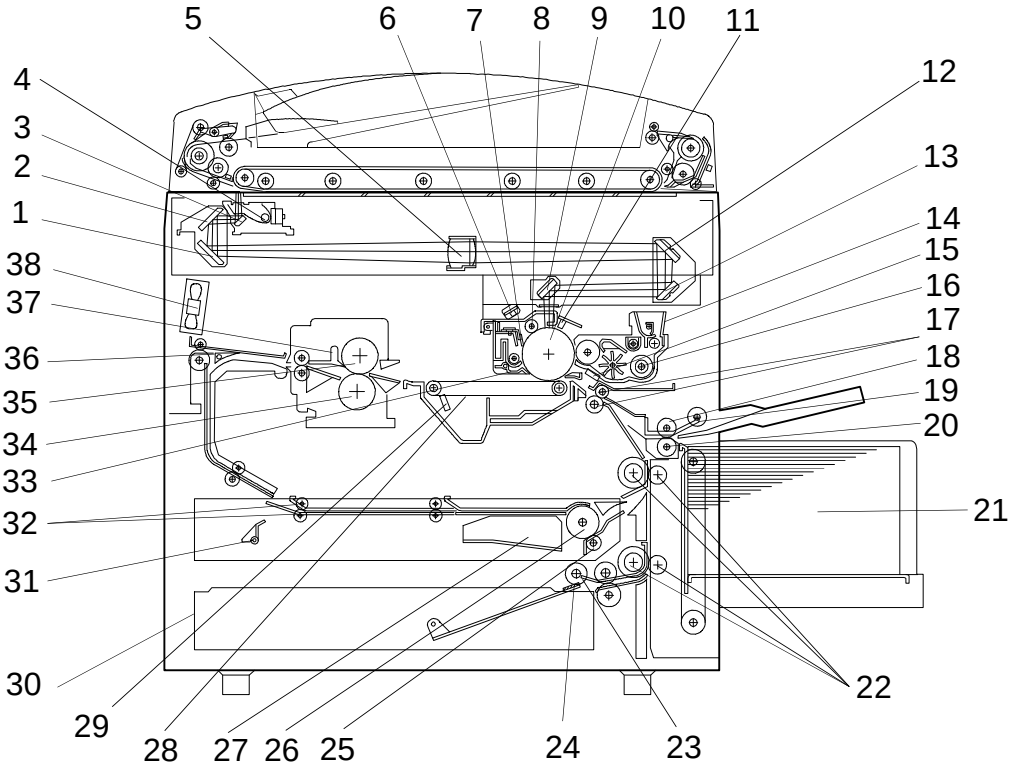

NOTE: 1. The A153 copier is the same as the A156 copier except that the A153 does not have a duplex tray or an LCT.

2. The A155 copier is the same as the A156 copier except that the A155 does not have a duplex tray.

– A160 copier –

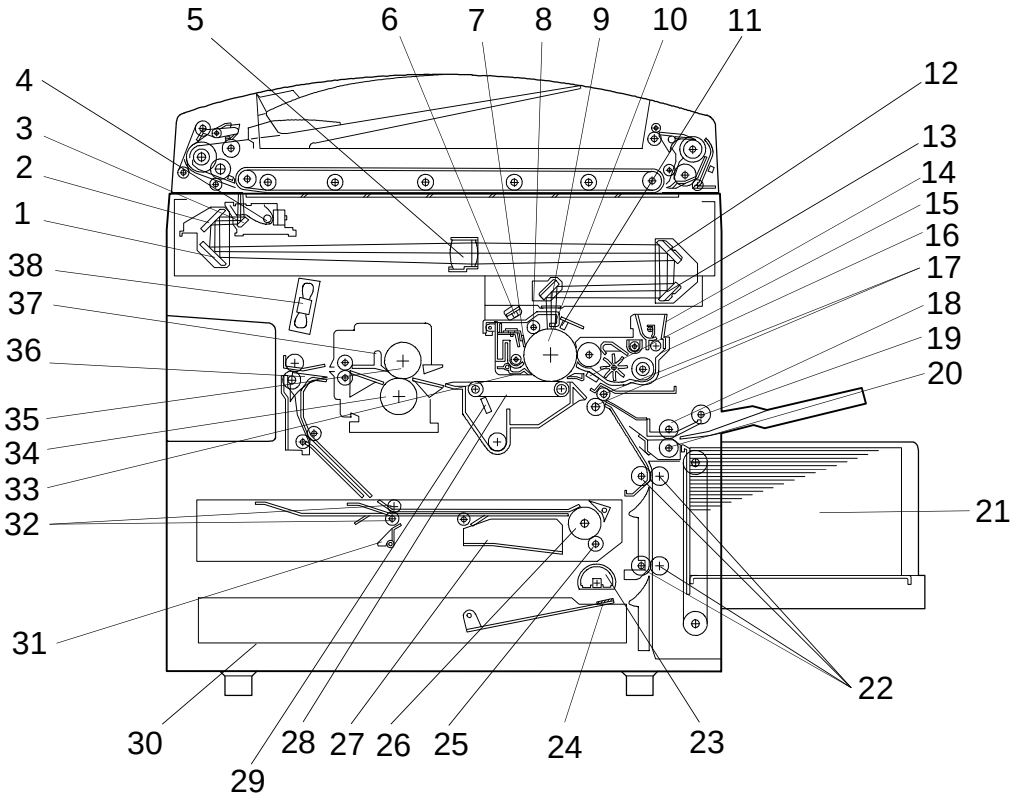

NOTE: 1. The A157 copier is the same as the A160 copier except that the A157 does not have a duplex tray or an LCT.

2. The A159 copier is the same as the A160 copier except that the A159 does not have a duplex tray.

1. 3rd Mirror
2. 2nd Mirror
3. 1st Mirror
4. Exposure Lamp
5. Lens
6. Quenching Lamp
7. Drum Cleaning Blade
8. Drum Charge Roller
9. 6th Mirror
10. OPC Drum
11. Erase Lamp
12. 4th Mirror
13. 5th Mirror
14. Toner Supply Unit
15. Pre-transfer Lamp
16. Development Unit
17. Registration Rollers
18. Feed Roller
19. Pick-up Roller
20. Separation Roller
21. Large Capacity Tray
22. Vertical Transport Rollers
23. Paper Feed Roller
    The roller for A153/A155/A156 copiers is different from that for A157/159/160 copiers.
24. Friction Pad
25. Duplex Friction Roller
26. Duplex Feed Roller
27. Jogger Fence
28. Transfer Belt
29. Transfer Belt Cleaning Blade
30. Lower Paper Tray
31. End Fence
32. Entrance Rollers
33. Pick-off Pawls
34. Pressure Roller
35. Hot Roller
36. Junction Gate
37. Hot Roller Strippers
38. Transport Fan

4. PAPER PATH

4.1 NORMAL COPYING

– A156 copier –

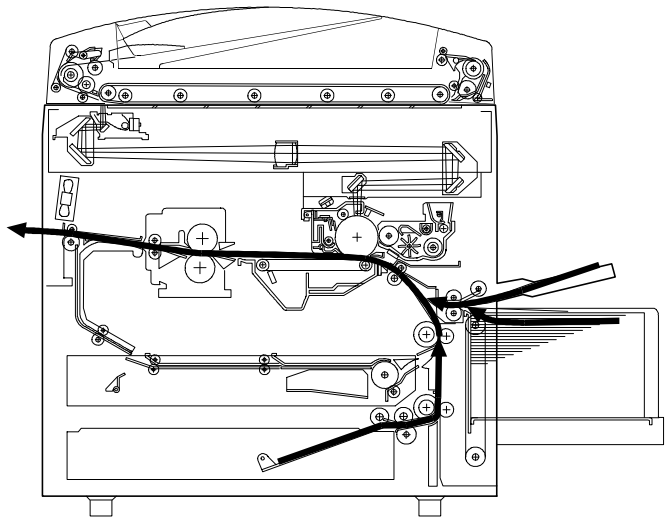

–A160 copier –

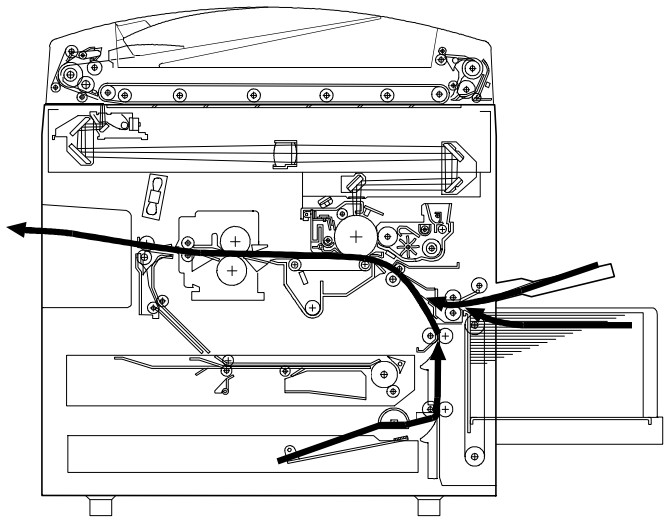

4.2 DUPLEX COPYING

– A156 copier –

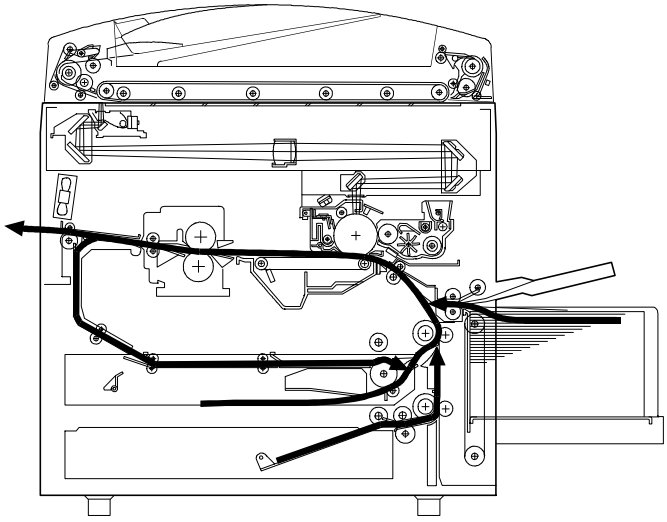

– A160 copier –

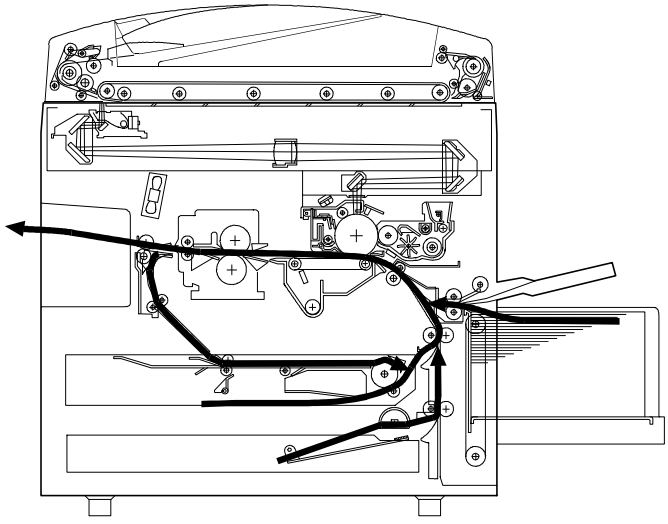

5. ELECTRICAL COMPONENT DESCRIPTIONS

Refer to the electrical component layout and the point to point diagram on the waterproof paper in the pocket for symbols and index numbers.

Symbol	Index No.	Description	Note
Printed Circuit Boards			
PCB1	14	Main Control	Controls all copier functions both directly or through other control boards.
PCB2	12	AC Drive	Provides ac power to the exposure lamp and fusing lamps.
PCB3	11	DC Power Supply	Provides dc power.
PCB4	96	Main Motor Control	Controls the rotation of the main motor.
PCB5	1	CB High Voltage Supply	Supplies high voltage to the drum charge roller and development roller.
PCB6	55	T High Voltage Supply	Supplies high voltage to the transfer belt.
PCB7	3	Operation Panel	Controls the LED matrix, and monitors the key matrix.
PCB8	8	Noise Filter (220 ~ 240 V machines only)	Removes electrical noise.
PCB9	63	Duplex Control (Duplex machines only)	Controls the operation of the duplex tray.
PCB10	6	Liquid Crystal Display (A156 machines only)	Controls the guidance display and displays guidance for machine operation.
PCB11	102	LCT Interface (LCT machines only)	Interfaces the LCT control signal between the main board and the LCT.
Motors			
M1	88	Main	Drives the main unit components.
M2	79	Toner Bottle Drive	Rotates the toner bottle to supply toner to the toner supply unit.
M3	97	Upper Tray Lift (A153/A155 machines only)	Raises the bottom plate in the upper paper tray.
M4	86	Lower Tray Lift (A153/A155/A156 machines only)	Raises the bottom plate in the lower paper tray.
M5	99	LCT Lift (LCT machines only)	Lifts up and lowers the LCT bottom plate.
M6	94	Optics Cooling Fan 1	Removes heat from the optics unit.
M7	95	Optics Cooling Fan 2 (A153/A155/A156 machines only)	Removes heat from the optics unit.
M8	89	Exhaust Fan 1	Removes the heat from around the fusing unit.
M9	90	Exhaust Fan 2 (A153/A155/A156 machines only)	Removes the heat from around the fusing unit.

Symbol	Index No.	Description	Note
M10	92	Scanner Drive	Drives the 1st and 2nd scanners (dc stepper motor).
M11	78	3rd Scanner Drive	Drives the 3rd scanner (dc stepper motor).
M12	87	Lens Vertical Drive	Shifts the lens vertical position.
M13	77	Lens Horizontal Drive	Shifts the lens horizontal position.
M14	58	Duplex Feed (Duplex machines only)	Drives the feed roller and moves the bottom plate up and down.
M15	61	End Fence Jogger (Duplex machines only)	Drives the end fence jogger to square the paper stack.
M16	60	Side Fence Jogger (Duplex machines only)	Drives the side fence jogger to square the paper stack.
Sensors			
S1	27	By-pass Feed Paper Width	Informs the CPU what width paper is in the by-pass feed table.
S2	31	By-pass Feed Paper End	Informs the CPU that there is no paper in the by-pass tray.
S3	51	Upper Tray Paper End (Non-duplex machines only)	Informs the CPU when the upper paper tray runs out of paper.
S4	107	Upper Relay	Detects the leading edge of paper from the upper tray to determine the stop timing of the upper paper feed clutch, and detects misfeeds.
S5	29	Upper Tray Upper Limit (A153/A155 machines only)	Detects the height of the paper stack in the upper paper tray to stop the upper tray lift motor.
S6	52	Lower Tray Paper End	Informs the CPU when the lower paper tray runs out of paper.
S7	106	Lower Relay	Detects the leading edge of paper from the lower paper tray to determine the stop timing of the lower paper feed clutch, and detects misfeeds.
S8	30	Lower Tray Upper Limit (A153/A155/A156 machines only)	Detects the height of the paper stack in the lower paper tray to stop the lower tray lift motor.
S9	100	LCT Lower Limit (LCT machines only)	Sends a signal to the CPU to stop lowering the LCT bottom plate.
S10	26	LCT Paper End (LCT machines only)	Informs the CPU when the LCT runs out of paper.
S11	28	LCT Upper Limit (LCT machines only)	Sends a signal to the CPU to stop lifting the LCT bottom plate.

Symbol	Index No.	Description	Note
S12	28	Registration	Detects the leading edge of the copy paper to determine the stop timing of the paper feed clutch, and detects misfeeds.
S13	50	Image Density (ID)	Detects the density of various patterns on the drum during process control.
S14	53	Toner Density (TD)	Detects the amount of toner inside the development unit.
S15	39	Lens Horizontal HP	Informs the CPU that the lens is at the horizontal home position.
S16	20	Lens Vertical HP	Informs the CPU that the lens is at the full-size position.
S17	15	Scanner HP	Informs the CPU when the 1st and 2nd scanners are at the home position.
S18	24	3rd Scanner HP	Informs the CPU when the 3rd scanner is at the home position.
S19	21	Original Length-2	Detects the length of the original. This is one of the APS (Auto Paper Select) sensors.
S20	45	Fusing Exit	Detects misfeeds.
S21	16	Platen Cover	Informs the CPU whether the platen cover is up or down (related to APS/ARE functions). ARE: Auto Reduce and Enlarge
S22	54	Toner End	Instructs the CPU to add toner to the toner supply unit, and detects toner end conditions.
S23	43	Auto Response	Returns the operation panel display and exits from the energy saver mode.
S24	23	Transfer Belt Contact HP	Informs the CPU of the current position of both the transfer belt unit and the drum charge roller unit.
S25	13	Auto Image Density (ADS Sensor)	Detects the background density of each original in ADS mode.
S26	44	Original Width	Detects the width of the original. This is one of the APS (Auto Paper Select) sensors.
S27	19	Original Length-1	Detects the length of the original. This is one of the APS (Auto Paper Select) sensors.
S28	56	Duplex Paper End (Duplex machines only)	Detects paper in the duplex tray.
S29	57	Duplex Turn (Duplex machines only)	Detects the trailing edge of the copy paper to determine the jogging timing, and detects misfeeds.
S30	62	Duplex Entrance (Duplex machines only)	Detects misfeeds.
S31	59	Side Fence Jogger HP (Duplex machines only)	Detects the home position of the duplex side fence jogger.
S32	64	End Fence Jogger HP (Duplex machines only)	Detects the home position of the duplex end fence jogger.

Symbol	Index No.	Description	Note
S33	22	Original Length (Option for N. American models)	Detects original length for 11" x 15" paper.
Switches			
SW1	33	By-pass Feed Table	Detects whether the by-pass feed table is open or closed.
SW2	36	Upper Tray (Non-duplex machines only)	Detects whether the upper paper tray is in place or not.
SW3	35	Lower Tray	Detects whether the lower paper tray is in place or not.
SW4	104	Tray Down (LCT machines only)	Sends a signal to the CPU to lower the LCT bottom plate.
SW5	25	Upper Tray Paper Size (Non-duplex machines only)	Determines what size of paper is in the upper paper tray.
SW6	34	Lower Tray Paper Size	Determines what size of paper is in the lower paper tray.
SW7	32	Vertical Guide Set (Non-LCT machines only)	Detects whether the vertical guide is open or not.
SW8	105	LCT Cover-1 (LCT machines only)	Detects whether the LCT cover is open or not.
SW9	103	LCT Cover-2 (LCT machines only)	Cuts the dc power line of the LCT lift motor.
SW10	42	Main	Supplies power to the copier.
SW11	41	Front Cover Safety	Cuts the ac power line and detects whether the front door is open or not.
SW12	48	Exit Cover Safety (A157/A159/A160 machines only)	Cuts the ac power line and detects whether the exit cover is open or not.
Magnetic Clutches			
CL1	72	Toner Supply	Turns the toner supply roller to supply toner to the development unit.
CL2	71	Development	Drives the development roller.
CL3	93	Transfer Belt Contact	Controls the touch and release movement of both the transfer belt unit and the drum charge roller unit.
CL4	73	Registration	Drives the registration rollers.
CL5	74	By-pass Feed	Starts paper feed from the by-pass feed table or LCT.
CL6	76	Relay	Drives the relay rollers.
CL7	84	Upper Paper Feed (Non-duplex machines only)	Starts paper feed from the upper paper tray.
CL8	85	Lower Paper Feed	Starts paper feed from the lower paper tray.

Symbol	Index No.	Description	Note
Solenoids			
SOL1	75	LCT machines: LCT/By-Pass Pick-up Solenoid Non-LCT machines: By-pass Pick-up Solenoid	Picks paper up from the by-pass feed table. When paper is fed from the LCT, this solenoid assists SOL3.
SOL2	91	Junction Gate (Duplex machines only)	Moves the junction gate to direct copies to the duplex tray or to the paper exit.
SOL3	98	LCT Pick-up (LCT machines only)	Picks up paper from the LCT.
SOL4	80	Upper Tray Pick-up (A153/A155 machines only)	Controls the up/down movement of the pick-up roller in the upper paper tray.
SOL5	82	Lower Tray Pick-up (A153/A155/A156 machines only)	Controls the up/down movement of the pick-up roller in the lower paper tray.
SOL6	81	Upper Tray Separation (A153/A155 machines only)	Controls the up-down movement of the separation roller in the upper paper tray feed station.
SOL7	83	Lower Tray Separation (A153/A155/A156 machines only)	Controls the up-down movement of the separation roller in the lower paper tray feed station.
Lamps			
L1	17	Exposure	Applies high intensity light to the original for exposure.
L2	65	Main Fusing	Provides heat to the central area of the hot roller.
L3	66	Secondary Fusing	Provides heat to both ends of the hot roller.
L4	4	Pre-transfer	Reduces the charge remaining on the drum surface before transfer.
L5	5	Quenching	Neutralizes any charge remaining on the drum surface after cleaning.
L6	2	Erase	After exposure, this eliminates the charge on areas of the drum that will not be used for the image.
Heaters			
H1	38	Drum	Turns on when the main switch is off to keep the temperature around the drum charge roller at a certain level. Also prevents moisture from forming around the drum.
H2	46	Optics Anti-condensation (option)	Turns on when the main switch is off to prevent moisture from forming on the optics.

Symbol	Index No.	Description	Note
H3	37	Lower Tray (option)	Turns on when the main switch is off to keep paper dry in the lower paper tray.
Thermistors			
TH1	69	Main Fusing	Monitors the temperature at the central area of the hot roller.
TH2	70	Secondary Fusing	Monitors the temperature at the ends of the hot roller.
TH3	47	Optics	Monitors the temperature of the optics cavity.
TH4	49	Drum Charge	Monitors the temperature of the drum charge roller.
Thermofuses			
TF1	68	Main Fusing	Provides back-up overheat protection in the fusing unit.
TF2	67	Secondary Fusing	Provides back-up overheat protection in the fusing unit.
TF3	18	Exposure Lamp	Opens the exposure lamp circuit if the 1st scanner overheats.
Counters			
CO1	40	Total	Keeps track of the total number of copies made.
CO2	N/A	Key (option)	Used for control of authorized use. The copier will not operate until it is installed.
Others			
CB1	9	Circuit Breaker (220 ~ 240V machines only)	Provides back-up high current protection for electrical components.
CC1	10	Choke Coil	Removes high frequency current.
TR1	7	Transformer (220 ~ 240V machines only)	Steps down the wall voltage to 100 Vac.



6. DRIVE LAYOUT

6.1 ALL MODELS

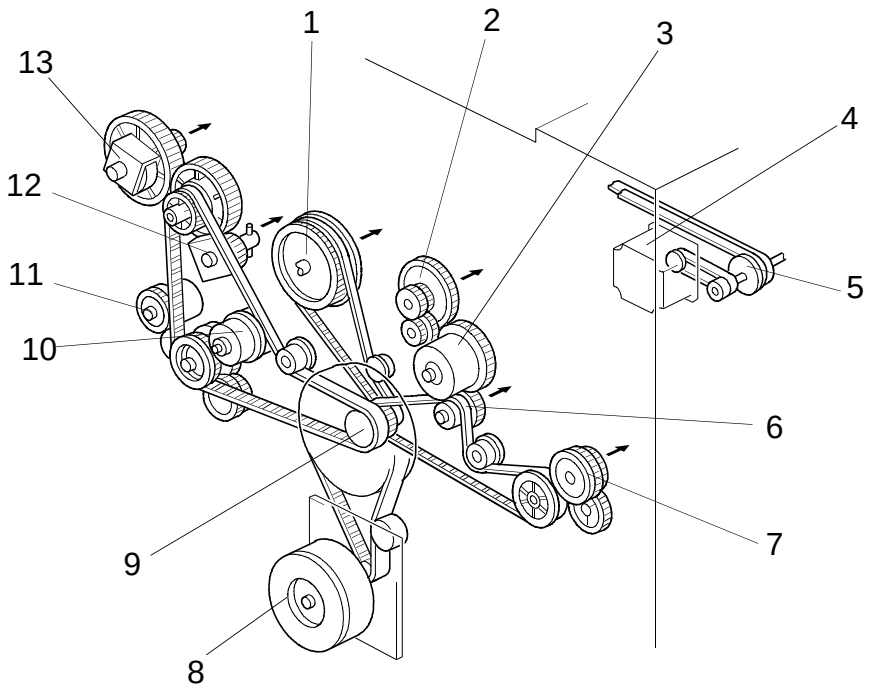

1. Drum Drive Pulley
2. Drum Charge Roller Drive Gear
3. Transfer Belt Contact Clutch Gear
4. Scanner Drive Motor
5. Scanner Drive Pulley
6. Transfer Belt Drive Gear
7. Fusing Unit Drive Gear
8. Main Motor
9. Main Pulley
10. Registration Clutch Gear
11. By-pass Feed Clutch Gear
12. Development Drive Clutch Gear
13. Toner Supply Clutch Gear

6.2 A153/A155/A156

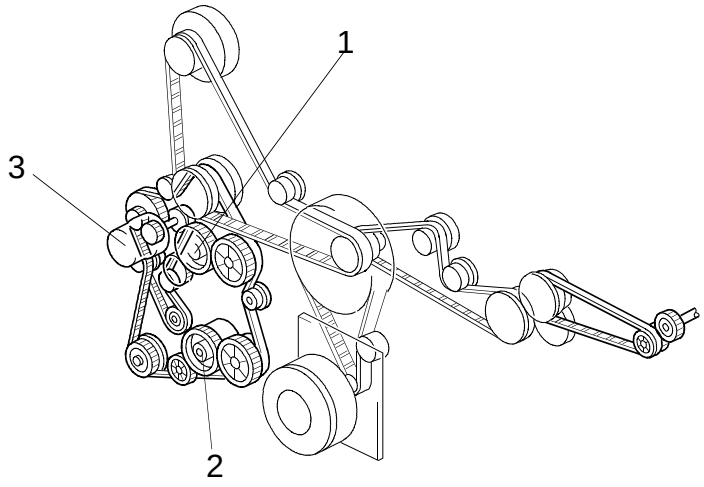

1. Upper Paper Feed Clutch Gear (A153/A155 only)
2. Lower Paper Feed Clutch Gear
3. Relay Clutch Gear

6.3 A157/A159/A160

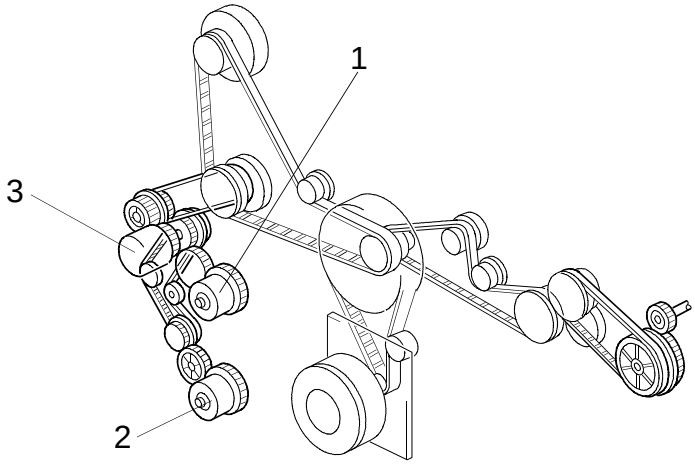

1. Upper Paper Feed Clutch Gear (A157/A159 only)
2. Lower Paper Feed Clutch Gear
3. Relay Clutch Gear

SECTION 2

DETAILED DESCRIPTIONS

1. PROCESS CONTROL

1.1 OVERVIEW

1.1.1 Copy Process around the Drum

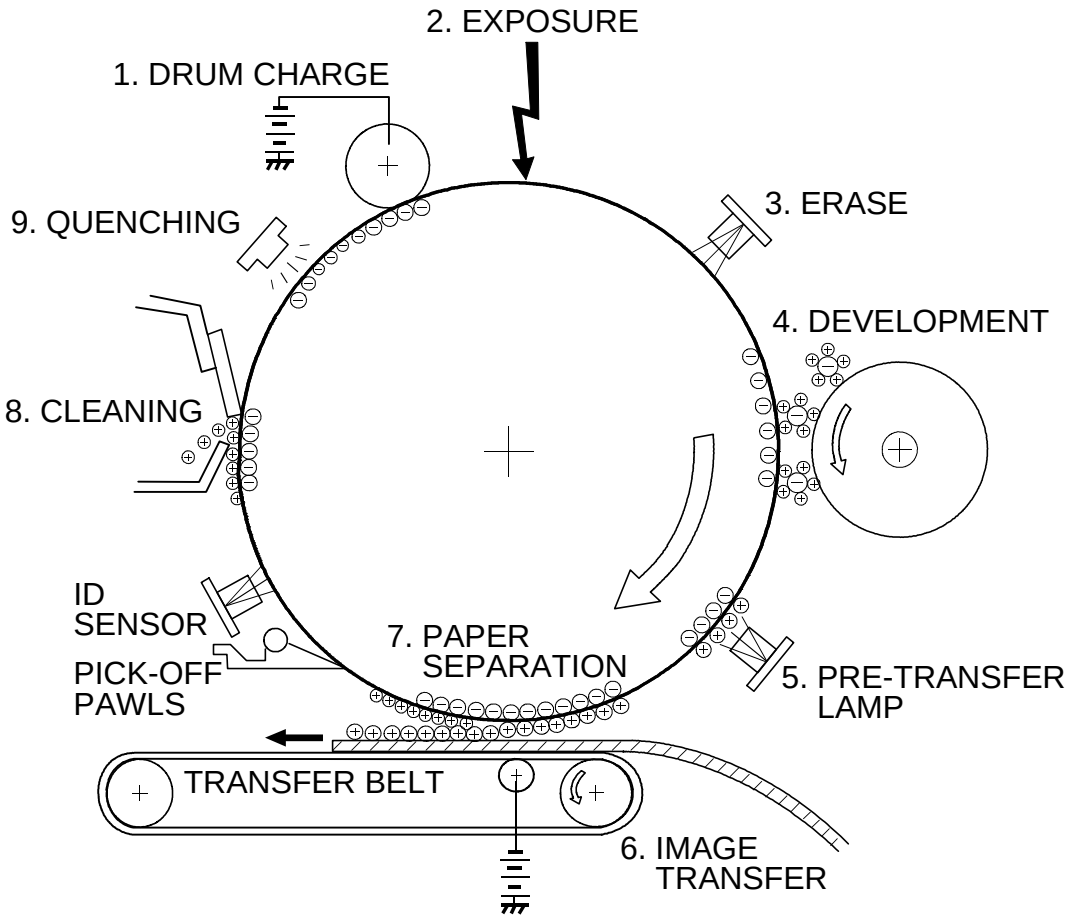

Fig. 1 Copy Process Around the Drum

1. DRUM CHARGE

In the dark, the drum charge roller gives a uniform negative charge to the organic photo-conductive (OPC) drum. The charge remains on the surface of the drum because the OPC layer has a high electrical resistance in the dark. The amount of negative charge on the drum is proportional to the negative voltage applied to the drum charge roller.

2. EXPOSURE

An image of the original is reflected onto the OPC drum surface via the optics assembly. The charge on the drum surface is dissipated in direct proportion to the intensity of the reflected light, thus producing an electrical latent image on the drum surface.

The amount of remaining charge as a latent image on the drum depends on the exposure lamp intensity, which is controlled by the exposure lamp voltage.

3. ERASE

The erase lamp illuminates the areas of the charged drum surface that will not be used for the copy image. The resistance of the drum in the illuminated areas drops and the charge on those areas dissipates.

4. DEVELOPMENT

As a result of the development potential (the difference of charged voltage between the drum and the toner), toner is attracted to the areas of the drum where the negative charge is greater than that of the toner, and the latent image is developed.

The development bias voltage applied to the development roller shaft controls two things:

1) The threshold level for whether toner is attracted to the drum or whether it remains on the development roller.
2) The amount of toner to be attracted to the drum.

The higher the negative development bias voltage is, the less toner is attracted to the drum surface.

5. PRE-TRANSFER LAMP (PTL)

The PTL illuminates the drum to remove almost all the negative charge from the exposed areas of the drum. This prevents the toner particles from being reattracted to the drum surface during paper separation and makes paper separation easier.

6. IMAGE TRANSFER

Paper is fed to the area between the drum surface and the transfer belt at the proper time so as to align the copy paper and the developed image on the drum surface. Then, the transfer bias roller applies a strong negative charge to the reverse side of the copy paper through the transfer belt. This negative charge produces an electrical force which pulls the toner particles from the drum surface on to the copy paper. At the same time, the copy paper is electrically attracted to the transfer belt.

7. PAPER SEPARATION

Paper separates from the OPC drum as a result of the electrical attraction between the paper and the transfer belt. The pick-off pawls help separate the paper from the drum.

8. CLEANING

The cleaning blade removes toner remaining on the drum after the image is transferred to the paper.

9. QUENCHING

Light from the quenching lamp electrically neutralizes the charge on the drum surface.

1.1.2 Factors Affecting Process Control

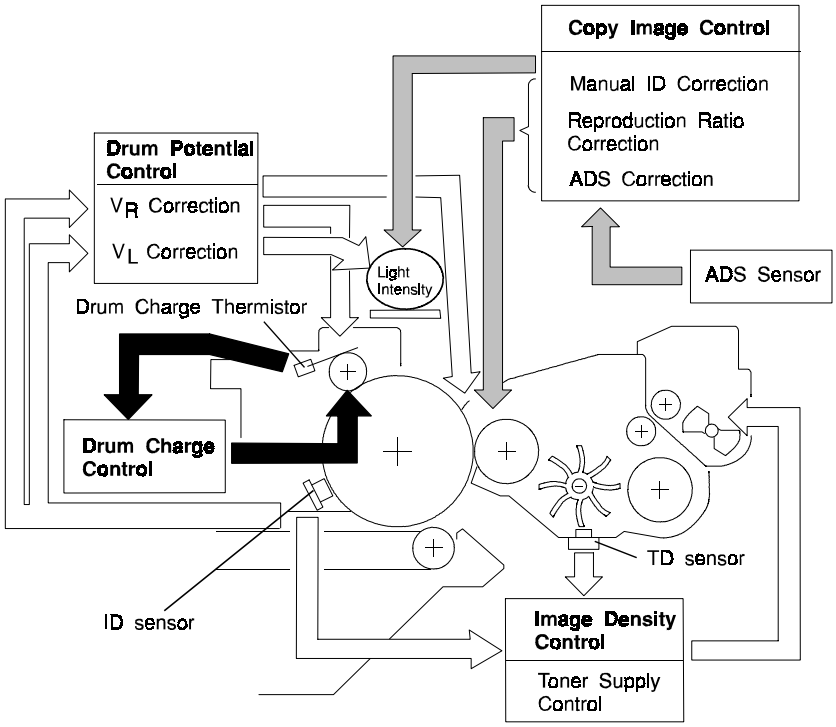

Fig. 2 Process Control

In this copier, the following items are controlled during the copy process to maintain good copy quality:

- Exposure lamp voltage
- Drum charge roller voltage
- Development bias voltage
- Toner supply

The machine controls the above by monitoring the following electrical components:

- Operation panel (manual ID selection and reproduction ratio)
- ADS sensor
- TD sensor
- ID sensor
- Drum charge thermistor
- Paper size detectors
- RAM board (drum rotation time, SP mode data, and paper size data)

1.1.3 Process Control Procedures

This section outlines how the machine controls the copy process based on the inputs from various sensors.

Copy Image Control

This is how the machine adjusts copy processes based on settings input at the operation panel.

- Manual ID Correction -

If the user inputs the image density manually, the machine adjusts the exposure lamp voltage and the development bias to achieve the selected image density.

- Reproduction Ratio Correction -

If the user selects a 116% or greater enlargement ratio or a 50% reduction ratio, the machine corrects the development bias to compensate for the loss in light intensity reaching the drum.

- ADS Pattern Detection and ADS Correction -

If the user selects Auto Image Density (ADS) mode, the machine monitors the output from the ADS sensor and adjusts the development bias to compensate for variations in ADS sensor response. This prevents dirty background.

Every 1,000 copies, the machine calibrates the ADS sensor output by reading the ADS pattern under the left scale of the exposure glass.

The ADS sensor must also be recalibrated:

- If the drum is changed
- If the ID sensor is cleaned or changed
- If the exposure lamp or optics are cleaned or changed.

Image Density Control

This is how the machine corrects the concentration of toner in the developer based on readings from the ID (Image Density) and TD (Toner Density) sensors.

- V_{SP} and V_{SG} Detection/ID Correction -

The machine uses V_{SP} and V_{SG} readings by the ID sensor, along with readings from the toner density sensor, to determine if the toner concentration in the developer is at the optimum level.

The amount of toner supplied to the V_{SP} pattern must remain constant. To ensure this, the machine applies a correction to the development bias for V_{SP} patterns when combined readings from the TD and ID sensors indicate that the carrier is ageing. This correction is called "ID Correction".

- Toner Supply -

There are three toner supply modes.

Detect toner supply: Toner supply varies with paper size, the latest TD sensor reading, and the latest V_{SP} and V_{SG} readings by the ID sensor. For example, toner supply will be increased if the toner weight ratio in the developer is decreasing, or if the most recent V_{SP} pattern was detected as being relatively light.

Fixed supply mode: The toner supply remains constant, but can be adjusted with an SP mode.

TD supply mode: Toner supply varies with TD sensor output. For example, if the toner weight ratio has decreased since TD sensor supply mode was selected, toner supply is increased.

Drum Potential Control

This is how the machine compensates for aging of the drum and the exposure lamp, and for the temperature around the drum charge roller.

- V_R Pattern Detection and V_R Correction -

As the drum gets older, the drum's residual voltage gradually increases due to electrical fatigue. Light from the exposure lamp will not erase the increased residual voltage effectively and dirty background will result.

Every 1,000 copies, part of the drum is developed with the V_R pattern development bias. If there is residual voltage on the drum, this area of the drum will attract some toner, making a V_R pattern. The ID sensor response to this pattern is compared with the response of the ID sensor to a bare area of the drum. The higher the residual voltage on the drum is, the darker the V_R pattern is. If the pattern is too dark, the drum will not be discharged sufficiently. As a result, the machine will increase the negative development bias to prevent dirty background. If it does, image density will drop. To prevent this, the machine will also increase the negative drum charge roller voltage.

(The V_{RP}/V_{RG} range to which the above mentioned bias and charge corrections are applied may be shifted to cancel the effect of ID correction.)

V_R correction data must be reset by SP mode if the drum is changed or if the ID sensor is cleaned or replaced.

- V_L Pattern Detection and V_L Correction -

This is how the machine adjusts the exposure lamp voltage to compensate for the effects of drum wear, dirty optics, and response of the drum to light.

Every 1,000 copies, an image of the V_L pattern under the left scale bracket is made on the drum. The machine compares the response of the ID sensor to this image with the response to a bare area of the drum.

The exposure lamp voltage is adjusted if there have been significant changes from the measurements made from when a new drum or lamp was installed.

(The V_{LP}/V_{LG} range to which the above mentioned lamp voltage adjustment is applied may be shifted to cancel the effect of ID correction.)

Initial V_{LP}/V_{LG} detection must be done by SP mode if a new drum is installed or if the exposure lamp is cleaned or replaced.

- T/H Correction -

The efficiency of transfer of charge from the drum charge roller to the drum varies with the temperature near the drum charge roller. Also, the drum potential after charging varies with the accumulated rotation time of the drum.

A thermistor measures the temperature near the drum charge roller, and the CPU keeps track of how long the drum has rotated for.

The machine adjusts the drum charge roller voltage depending on the temperature and accumulated rotation time.

This section has provided an overview of all the process control procedures done by the machine. The next few pages will explain each of these in more detail. At the end, there will be a summary.

1.2 COPY IMAGE CONTROL

Copy image control adjusts the development bias and exposure lamp voltage to take account of the reproduction ratio and image density. The image density is either selected by the user or detected automatically.

1.2.1 Manual ID Correction

If the user selects the image density manually, the selected manual ID level affects the exposure lamp voltage and the development bias as follows.

- Exposure Lamp Voltage -

As the ID level increases from 1 to 7, the exposure lamp voltage is increased as shown in the following table.

Table 1. Exposure lamp voltage control by manual ID level

ID Level	Lamp Voltage
1	Vexp –4.0 V
2	Vexp –3.0 V
3	Vexp –1.5 V
4	Vexp ±0.0 V
5	Vexp +1.5 V
6	Vexp +4.0 V
7	Vexp +6.0 V

Vexp = Lamp voltage selected with SP4-001. It can be between 50 and 75 V. It is factory set, and varies from copier to copier.

- Development Bias -

The greater the negative voltage, the paler the image on the drum. However, the development bias is adjusted only at the extreme light and dark ends of the manual ID range.

Table 2. Development bias control by manual ID level

ID Level	Development Bias
1	+80 V
2	±0 V
3	±0 V
4	±0 V
5	±0 V
6	±0 V
7	SP2-201-002 (see below)

Note: The base development bias voltage is -240 Volts.

For ID Level 7 (lightest copies), there are four possible development bias correction settings that can be selected with SP2-201-002, as shown below.

Table 3. Lightest ID level development bias (ID Level 7)

SP2-201-002 Setting	Density	Dev. Bias Correction Voltage
1 (Factory Setting)	Normal	–40 V
2	Dark	±0 V
3	Lighter	–80 V
4	Lightest	–120 V

In summary, the development bias at various ID level settings is shown below.

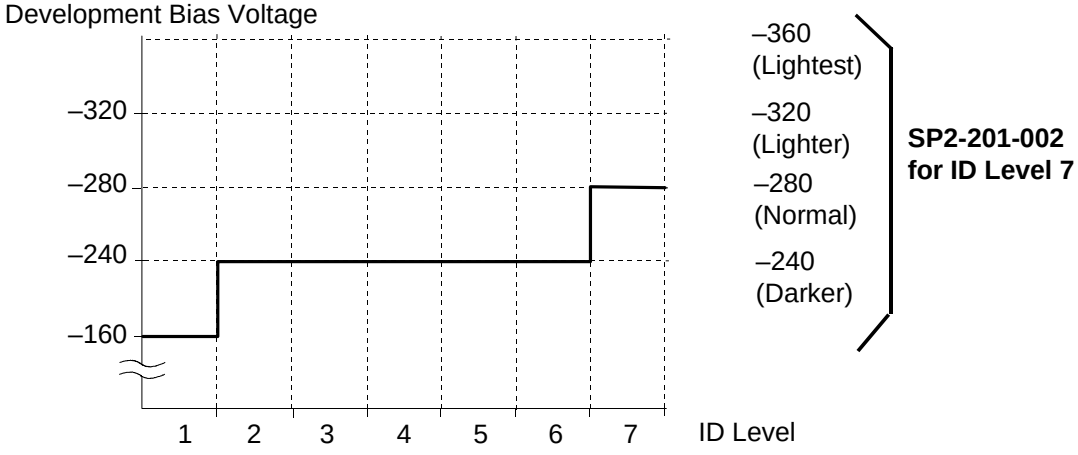

1.2.2 Reproduction Ratio Correction

At reproduction ratios of 50% and 116% or greater, the intensity of light reaching the drum from the original drops significantly, which could cause copies to become underexposed (too dark).

To compensate for this, a development bias correction voltage is applied as shown in Table 4. This correction increases the development bias voltage, restoring the copy image density to normal.

Table 4. Reproduction ratio correction

Reproduction Ratio (%)	Development Bias Correction Voltage
181 ~ 200	–100 V
161 ~ 180	–80 V
142 ~ 160	–60 V
123 ~ 141	–40 V
116 ~ 122	–20 V
51 ~ 115	±0 V
50	–30 V

1.2.3 ADS Correction

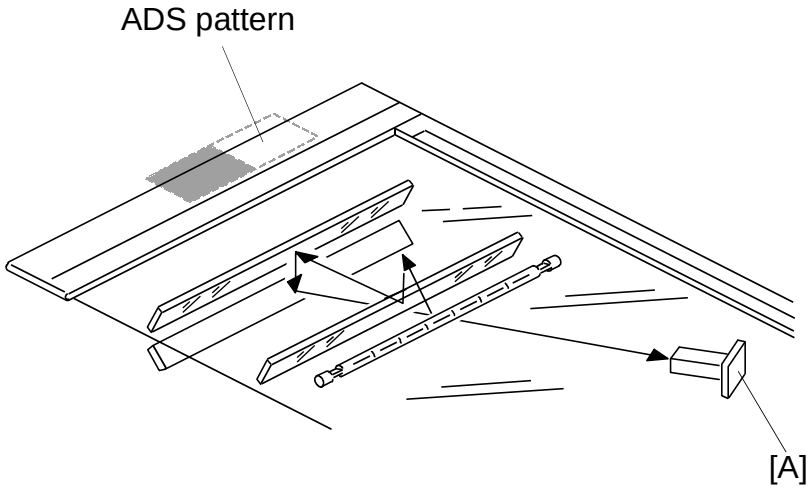

Fig. 3 ADS pattern

If the user selects Auto Image Density (ADS) mode, the output of the ADS sensor is used to correct the development bias; the exposure lamp voltage is kept at the setting for ID level 4 and is not adjusted.

In ADS mode, the ADS sensor [A] detects the original background density. To prevent dirty background from appearing on copies, the CPU corrects the development bias voltage for the original. To do this, it compares the ADS sensor output from the original [V_{ADS} (original)] with a stored reference value [V_{ADS} (pattern)] that was taken earlier from the ADS sensor pattern. The correction is shown in table 5, and is applied every copy.

Table 5. ADS data correction

ADS Density SP5-106		**Development Bias Correction Voltage**
Setting	**Copy Density**	
0	Darker	816 x (AR – 0.79)
1	Normal	816 x (AR – 0.85)
2	Lighter	816 x (AR – 0.95)

Where AR (ADS Ratio) = V_{ADS} (original)/V_{ADS} (pattern)

Note that there are three possible corrections. The default setting is 1 (normal). However, for example, if the user requires copies to be darker when using ADS mode, a technician can set SP5-106 to 0.

V_{ADS} (pattern) is checked every 1,000 copies. (See process control checks at every 1,000 copies on p2-29.) It is kept at 2.7±0.1 volts by a gain adjustment.

See the "Optics - Automatic Image Density Control System (ADS)" section for more details on how the ADS sensor measures the background and on how [V_{ADS} (pattern)] is corrected every 1,000 copies.

1.3 IMAGE DENSITY CONTROL

1.3.1 Overview

The machine controls the toner supply mechanism using the toner density sensor (TD sensor) and the image density sensor (ID sensor).

Readings from the TD sensor are used to keep the toner concentration in the developer at a constant level. However, the image on the OPC drum varies due to the variation in toner chargeability, which is influenced by the environment, even if the toner concentration is constant. Because of this, readings from the ID sensor are used to change the toner concentration to keep the image density on the OPC drum constant.

1.3.2 VSP and VSG Detection

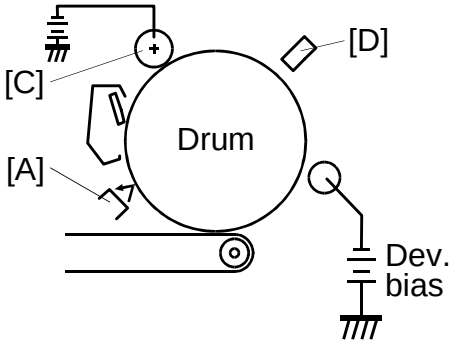

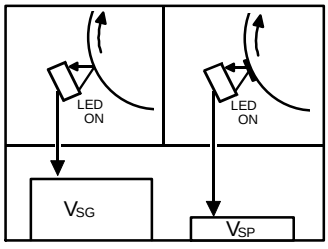

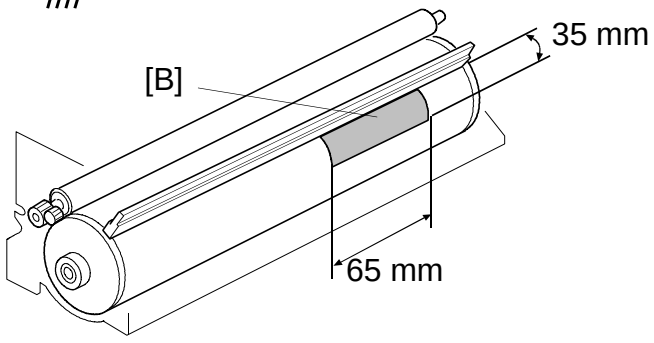

The ID sensor [A] (below the drum cleaning section) checks the following voltages.

- VSG: the ID sensor output when checking the erased drum surface.
- VSP: the ID sensor output when checking the Vsp pattern image.

In this way, the reflectivity of both the erased drum surface and the pattern on the drum are checked. This compensates for any variations in light intensity from the LED component of the sensor or the reflectivity of the drum.

The VSP pattern [B] is made on the OPC drum by the drum charge roller [C] and the erase lamp [D].

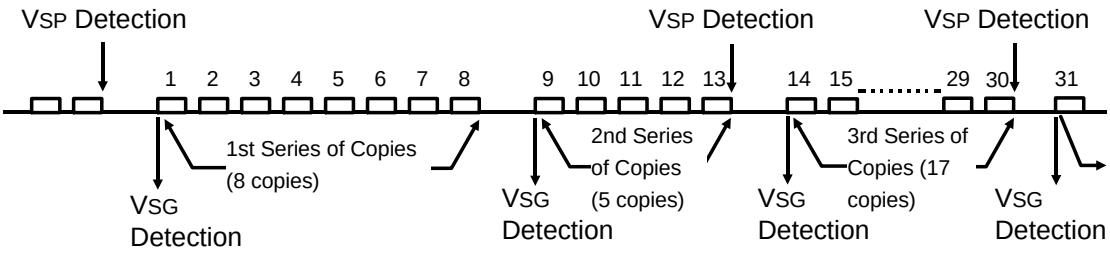

- VSG is measured at the start of every copy run.
- VSP is detected at the end of a copy run if 10 or more copies have been made since VSP was last measured. The transfer belt must be released to measure VSP, so it cannot be checked during a copy run.

1.3.3 ID Correction for the VSP Pattern

Background

Developer consists of carrier particles (ferrite and resin) and toner particles (resin and carbon). The positive triboelectric charge on the toner is caused by friction between the carrier and toner particles. However, the chargeability of carrier decreases with time. Therefore, if the toner weight ratio in the developer is the same, the amount of positive triboelectric charge for one particle of toner decreases. This is because the number of toner particles which surround one carrier particle is the same, but the chargeability of one particle of carrier is less than before.

If the development potential, that is, the difference of voltage between the development roller and the drum for the VSP pattern is the same, more toner particles are attracted to the VSP pattern, because one particle of toner has less positive charge than before. (More toner particles are required to balance the charge of the VSP pattern.)

If the ID sensor were to check the VSP pattern's reflectivity under this condition, the VSP pattern would be darker than before. The CPU would then incorrectly conclude that the toner weight ratio in the developer is too high even though the ratio actually remains the same. The CPU would then decrease the toner clutch on time, leading to a low percentage of toner in the developer by weight as the copy count rises.

If uncontrolled, this would cause some side effects, such as low image density or developer adhering to the copy. To prevent these side effects, ID correction is done when the VSP pattern is made.

The idea behind ID correction is to cancel the effect on the VSP pattern of the decrease in the chargability of carrier with time. ID correction is done by changing the development bias for the VSP pattern so that it has the same darkness even though the chargeability of the carrier has changed.

ID Correction Method

The machine determines whether the development bias needs adjusting by monitoring the density of the toner/carrier mixture in the development unit. When the toner weight ratio in the developer changes, the voltage output by the TD sensor changes accordingly. The smaller the toner wight ratio in the developer is, the greater the TD sensor output is, as shown in the diagram below.

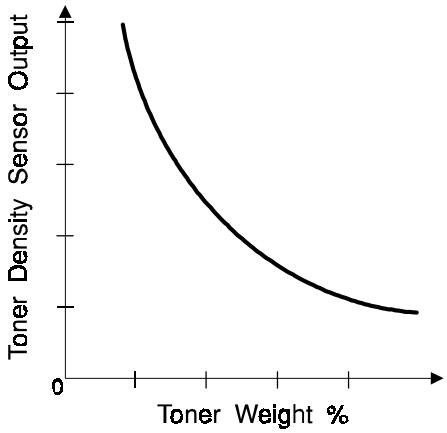

When new developer with the standard concentration (2.0% by weight, 20 g of toner in 1,000 g of developer) is installed, the TD sensor initial setting must be done with SP mode 2-214. This sets the sensor output to 2.5 ± 0.1 V.

As shown earlier, the chargeability of carrier in the developer decreases with the copy count. If no correction is done, the CPU tries to decrease the toner weight ratio in the developer. So this eventually causes the reading from the TD sensor to exceed its maximum acceptable value (initial value + 1.0 V).

If the corrected TD sensor output VTREF exceeds the upper limit over 100 times continuously, development bias for the VSP pattern is corrected. VTREF is the current TD sensor output with a correction factor included that is based on the VSP/VSG ratio from the ID sensor (see VSP and VSG Detection) calculated every 10 copies or so (see Toner Supply Control - Detect Supply Mode for more about VTREF).

The first time this happens, the correction is -40 V. If the upper limit is exceeded 100 consecutive times again later, an extra -40 V correction is applied (see the following table). There should be no need for further steps, because the toner proportion by weight will stabilize before this.

Table 6. ID correction

Step	Development Bias Correction for the V_{SP} Pattern
Initial	0 V
1st	–40 V
2nd	–80 V

If no correction is applied, the charge on the drum for the V_{SP} pattern is –600 V, and the development bias for the V_{SP} pattern is –300 V. So there is a difference of 300 V between the development roller and the drum for the V_{SP} pattern.

When the ID correction is applied, the voltage difference is reduced. For example, if a –40 V ID correction is applied, the difference in voltage is:

Before ID Correction: –300 – (–600) = 300 V
After ID Correction: –300 **– 40** – (–600) = 260 V

As a result, the effect of the change in chargeability of the carrier particles is canceled. The darkness of the V_{SP} pattern returns to normal.

1.3.4 Toner Supply Control During Copying

There are three modes for controlling the toner supply.

- Detect supply mode
- Fixed supply mode
- TD sensor supply mode

The mode can be selected with SP2-208-001. The factory setting is detect supply mode.

Toner clutch on time is calculated by the following formula.

$$\text{Toner CL on time [ms]} = \frac{\mathbf{S \times AT \times TSC / 100}}{\mathbf{TS}} \qquad \text{(Formula 1)}$$

where: S = Copy paper size [cm^2]
AT = Amount of toner developed on the latent image per unit area
= 0.7 [mg/cm^2] (constant)
TSC = Toner supply coefficient [%]
TS = Amount of toner supplied per unit of time
= 0.183 [mg/ms] (for A153, A155, and A156 copiers)
= 0.133 [mg/ms] (for A157, A159, and A160 copiers)

AT and TS are constant, and S depends only on paper size, but TSC is determined in different ways depending on which toner supply mode is in use.

Determination of TSC

TSC is an estimate of the proportion of black area in the image that is made by the machine.

(1) Detect Supply Mode

In detect supply mode, TSC is determined from outputs from both the TD and ID sensors, in conjunction with the toner supply ratio that has been selected for this mode.

- Toner Supply Ratio -

This is selected with SP2-222. The settings are 1 (7%), 2 (15%), 3 (30%), or 4 (60%). The default is 15%.

- TD and ID Sensor Outputs -

The machine calculates a value for V_T-V_{TREF}.

- V_T: Current TD sensor output
- V_{TREF}: TD sensor output at the latest V_{SP} detection corrected for ID sensor output (V_{SP}/V_{SG}); this is calculated every 10 or so copies (see V_{SP}/V_{SG} Detection for more on V_{SP} and V_{SG}).

V_{TREF} is determined as follows.

$V_{TREF} = V_{TP} + \Delta V_{REF}$ (Formula 2)

- V_{TP} = TD sensor output at V_{SP} detection
- ΔV_{REF} = Correction factor based on V_{SP}/V_{SG} (from the ID sensor output), determined by the following table.

Table 7.

V_{SP} pattern darker



V_{SP} pattern lighter

V_{SP}/V_{SG}	ΔV_{REF} [V]
~ 0.075	+4 x 0.0196
0.076 ~ 0.090	+2 x 0.0196
0.091 ~ 0.105	±0
0.106 ~ 0.125	–2 x 0.0196
0.126 ~ 0.160	–4 x 0.0196
0.161 ~ 0.205	–6 x 0.0196
0.206 ~ 0.500	–8 x 0.0196
0.501 ~	The previous V_{TREF}

TSC [%] is then determined from V_T-V_{TREF} and the toner supply ratio, as shown by table 8.

Table 8. Toner Supply Coefficient (%)

(V_T-V_{TREF}) /0.0196	Supply Ratio (SP Mode Setting)			
	7%	15%	30%	60%
~ 0	0	0	0	0
1 ~ 3	7	15	30	60
4 ~ 5	15	30	45	60
6 ~ 7	30	45	60	60
8 ~	60	60	60	60

For example, if the toner supply ratio is 15% and (V_T-V_{TREF})/0.0196 is 4.5, TSC is 30. This value is then used in the formula to determine the toner supply clutch on time given at the start of this discussion. (See formula 1.)

This all means that, if the ID sensor reading indicated that the most recent V_{SP} pattern was relatively light, the toner supply clutch will stay on for longer. (If V_{SP}/V_{SG} is higher, ΔV_{REF} is smaller [Table 7]. This means that V_{TREF} is smaller [Formula 2], leading to a larger V_T-V_{TREF}. So, for a particular toner supply ratio, the TSC value will be higher [Table 8], so the clutch stays on for longer [Formula 1].)

(2) Fixed Supply Mode

TSC [%] is fixed. It is selected with SP mode 2-208-003 as shown below.

Table 9. Toner Supply Coefficient (%)

	SP2-208-003 Value			
	1	2	3	4
TSC [%]	2	4	6	11

NOTE: Default = 6%

The machine automatically switches to fixed supply mode if the ID or TD sensor fail (see section 1.3.5.).

(3) TD Sensor Supply Mode

TSC [%] is determined as shown in Table 8 for detect supply mode. However, the toner supply ratio and V_T – V_{TREF} are both determined in different ways. In particular, the ID sensor output is ignored.

- Toner Supply Ratio -

The supply ratio is selected with SP2-208-002. The settings are 1 (7%), 2 (15%), 3 (30%), or 4 (60%). The default is 15%.

- V_T – V_{TREF} -

- V_{TREF} = V_{TREF} at the moment that TD sensor supply mode was selected.
- V_T = Current TD sensor output

1.3.5 Toner Supply in Abnormal Sensor Conditions

If any sensor errors occur under detect supply mode, toner supply mode is changed automatically as shown below.

Table 10.

Error	Abnormal Condition	Fallback Toner Supply Mode	Display on Operation Panel
ID Sensor Adjustment Error	When ID sensor output cannot be adjusted to 4.0 ± 0.2 V	Fixed Supply Mode	None
Abnormal ID Sensor (V_{SP})	If V_{SP} > 2.5 V during V_{SP} detection.	Fixed Supply Mode	None
Abnormal ID Sensor (V_{SG})	If V_{SG} < 2.5 V during V_{SG} detection	Fixed Supply Mode	
TD Sensor Adjustment Error	When TD sensor output cannot be adjusted to 2.5 ± 0.1 V	Fixed Supply Mode	Manual ID level or ADS indicator blinks
TD Sensor (V_T) Measurement Error	If V_T > 4.0 V or V_T < 0.3 V during V_T detection.	Fixed Supply Mode	Manual ID level or ADS indicator blinks
Drum Charge Thermistor Error	Temperature detected by the drum charge thermistor is below 0°C or above 60°C	Fixed Supply Mode	None
Abnormal Drum Charge Thermistor Output	Temperature detected by the drum charge thermistor (T) is between 0 °C and 20°C	TD Sensor Supply Mode	None

NOTE: No indication is displayed under the "abnormal drum charge thermistor output" condition, because the machine soon recovers due to the heat inside the machine.

1.4 DRUM POTENTIAL CONTROL

The characteristics of the drum vary with the temperature around the drum, and they change as the drum gets older. To take account of these and other related factors, this machine has the following three drum potential control routines.

- V_R pattern correction
- V_L pattern correction
- T/H correction

1.4.1 V_R Pattern Correction

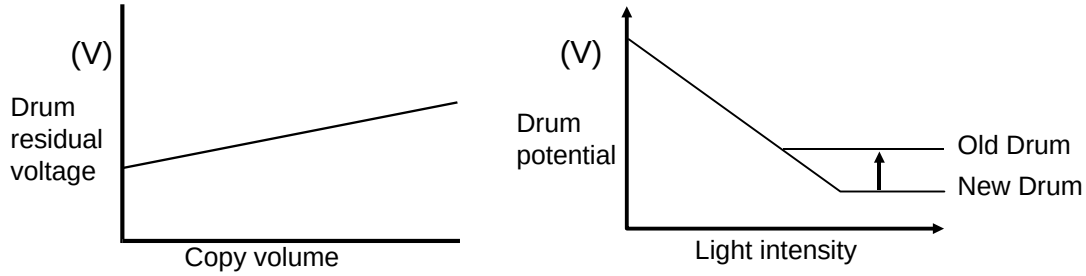

As the drum ages, the drum residual voltage gradually increases due to electrical fatigue (see the upper left chart). In other words, as the drum gets older, light does not discharge it as much (see the upper right chart). This may cause dirty background on copies. V_R pattern detection every 1,000 copies using the ID sensor avoids this problem.

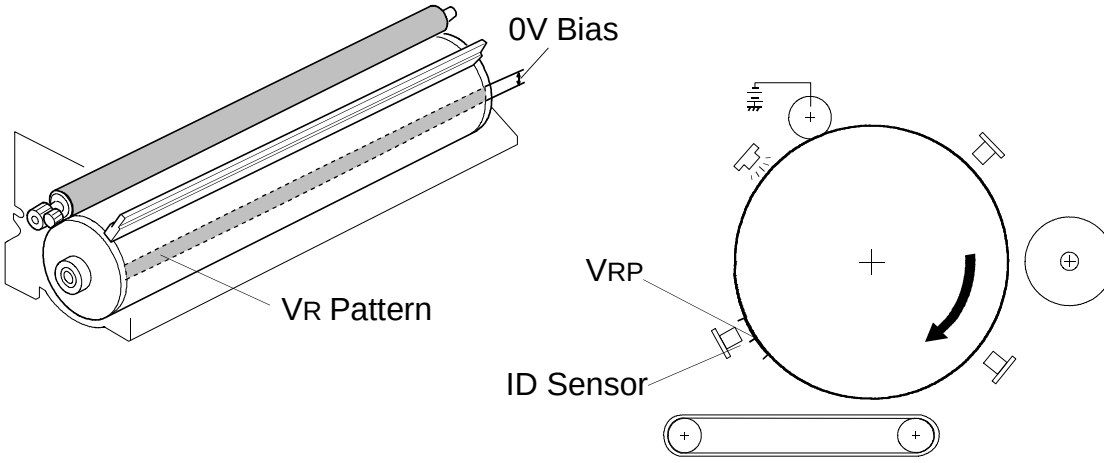

Every time V_R pattern detection is done, a strip across the drum is charged using zero development bias and the standard charge on the drum charge roller that is used for copying (with all corrections included). At the same time, all the blocks of the erase lamp turn on to illuminate this charged area of the drum.

If there is residual voltage on the drum, this area of the drum will attract some toner, making a V_R pattern. The ID sensor checks the reflectivity of the V_R pattern. This sensor output voltage is V_{RP}.

In V_R detection, V_{RP} is compared with V_{RG}.

- V_{RG} is the reflectivity of the bare area of the drum, measured by the ID sensor. It has the same value as V_{SG} (see Image Density Control - V_{SG} and V_{SP} Detection).
- V_{RP} is the output from the ID sensor reflected from the V_R pattern.

When the drum residual voltage increases, the V_R pattern becomes darker. Then, V_{RP} decreases and the V_{RP}/V_{RG} ratio decreases.

Then the CPU increases the negative development bias voltage to prevent dirty background, and simultaneously increases the negative drum charge roller bias voltage to prevent low image density. This is the V_R correction.

Table 11. V_R correction

	ID Correction			Drum Charge Roller Correction Voltage	Development Bias Correction Voltage
	±0 V	–40 V	–80 V		
V_{RP}/V_{RG} x 100(%)	64 ~ 100	60 ~ 100	54 ~ 100	±0 V	±0 V
	47 ~ 63	42 ~ 59	36 ~ 53	–40 V	–40 V
	35 ~ 46	30 ~ 41	24 ~ 35	–80 V	–80 V
	26 ~ 34	21 ~ 29	16 ~ 23	–120 V	–120 V
	0 ~ 25	0 ~ 20	0 ~ 15	–160 V	–160 V

For example, taking the ID correction to be zero for now, if V_{RP}/V_{RG} is 45%, the drum charge and development bias corrections will both be -80V.

V_R correction also depends on the current V_{SP} pattern ID correction that is being used. If development bias has been increased by ID correction, the V_R correction may be smaller in some cases to take this into account. This is shown by both the table above and the following figure.

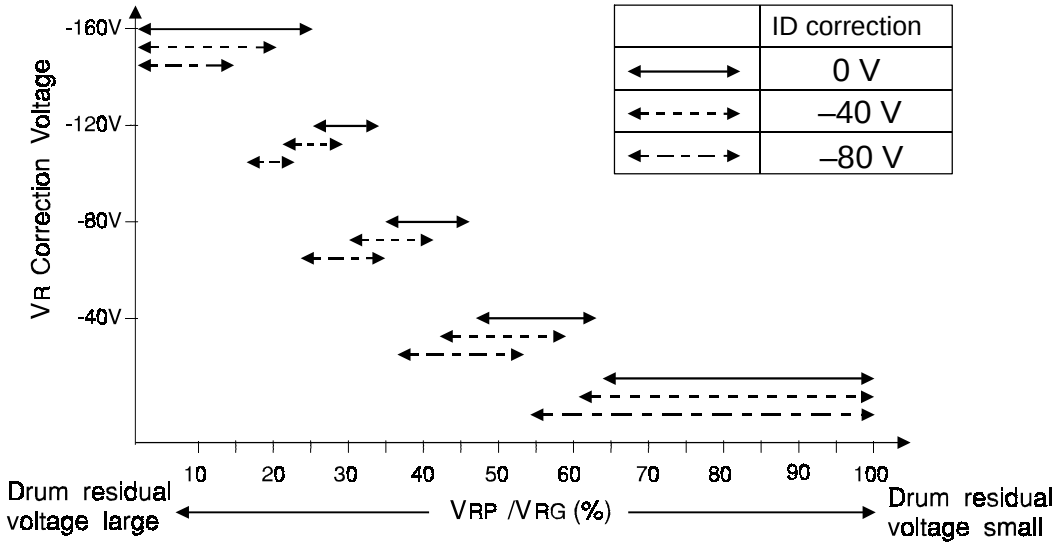

Using the same example to illustrate this, but with an ID correction of -40V, the corrections will both be -40 V this time.

Note that forced V_R detection by SP mode must be done when a new drum is installed or the ID sensor cleaned or replaced. (See Service Tables - Practical SP Mode Use Tables for the correct sequence of SP modes to perform at this time). The correction is done in the same way as described above.

1.4.2 VL Pattern Correction

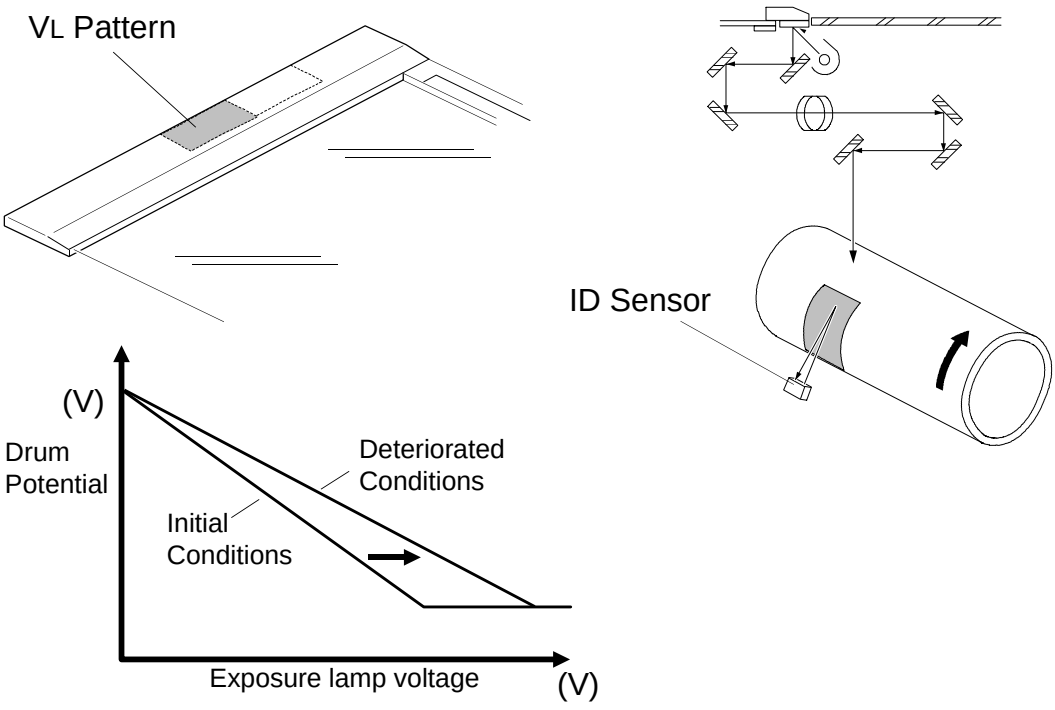

Dirty optics or deterioration of the exposure lamp decreases the intensity of the light that reaches the drum via the optics cavity. As more copies are made during the drum's life, the photoconductive layer gets worn and the response of the drum to the exposure lamp weakens.

VL pattern correction counteracts dirty background caused by the factors mentioned above.

The VL pattern is a light gray sensor pattern on the operator side of the bottom of the left scale bracket. The ID sensor output at VSG detection in memory is used again as VLG (the reflectivity of the bare area of the drum).

When VL pattern detection starts, the exposure lamp turns on and the main motor stays on to rotate the drum. The drum charge roller, all the blocks of the erase lamp, the pre-transfer lamp, and the quenching lamp turn on. Then, the appropriate blocks of the erase lamp turn off and on to make a VL pattern on the drum surface.

In VL detection, VLP is compared with VLG.

- VLG is the reflectivity of the bare area of the drum, measured by the ID sensor. It has the same value as VSG (see Image Density Control - VSG and VSP Detection).
- VLP is the output from the ID sensor reflected from the VL pattern.

V_L detection is done at the following times:

- Every 1000 Copies
- Forced Detection: whenever a new drum or exposure lamp is installed, or exposure lamp voltage is adjusted, or when the optics are cleaned, forced V_L detection (SP3-105) must be executed. (See Service Tables - Practical SP Mode Use Tables for the correct sequence of SP modes to perform at this time).

  Forced V_L detection is different from the routine 1,000 copy V_L detection, so it is explained below in detail.
  During forced V_L detection, BL and V_{REF} are determined as shown below.
  NOTE: BL = Development bias used for V_L correction.

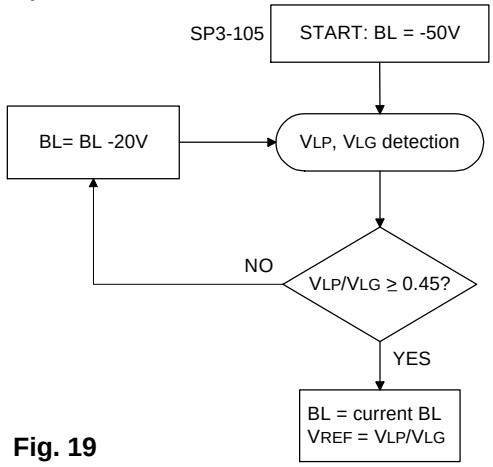

Fig. 19

BL starts at -50 V and -20 V is added until the value of V_{LP} is appropriate.

V_L Correction Method

During V_L pattern detection, lamp voltage, drum charge voltage and development bias are as follows.

- Lamp voltage: same as during normal copying (ADS mode)
- Drum charge voltage for the V_L pattern: same as during normal copying
- Development bias for forced V_L detection: BL + V_R correction + $V_{BL(ID)}$
- Development bias for V_L detection every 1000 copies:
  = BL + (–25 V) + V_R correction + $V_{BL(ID)}$

V_{BL} (ID) is an ID compensation factor based on the current ID correction used for the V_{SP} pattern (see Image Density Control for details on this ID Correction). It is applied as shown in Table 12.

Table 12

ID correction	0 V	–40 V	–80 V
V_{BL}(ID)	±0 V	–10 V	–20 V

- Forced V_L Detection -

When forced V_L detection (SP3-105) is executed, the CPU stores the V_L reference value (V_{REF}) in memory (see Fig. 19).

V_{REF} = initial V_{LP}/V_{LG}

- Every 1,000 copies -

After the forced V_L detection, V_L detection is performed at the end of every 1000 copies. The V_{LP}/V_{LG} value at that time is called V_{DAT}.

V_{DAT} = current V_{LP}/V_{LG}

- During Copying -

The CPU compares the latest V_{DAT} with the latest V_{REF} and applies a V_L correction to the exposure lamp voltage as shown below.

Table 13. V_L Correction

	ID Correction			Lamp Correction Voltage
	±0 V	–40 V	–80 V	
V_{DAT}/V_{REF} x 100 (%)	146 ~	156 ~	168 ~	–1 V
	101 ~ 145	101 ~ 155	101 ~ 167	±0 V
	~ 100	~ 100	~ 100	+1 V

In general, the lamp will be dimmed slightly if the V_{LP} pattern reflectivity has increased significantly (the V_{LP} pattern is paler), and made brighter if the reflectivity has decreased (the V_{LP} pattern is darker).

V_L correction also depends on the current V_{SP} pattern ID correction that is being used (see Image Density Control - ID Correction for the V_{SP} pattern).

For example, taking the ID correction to be zero for now, if V_{DAT}/V_{REF} is 150%, the lamp correction will be -1V (made slightly dimmer). Using the same example, but with an ID correction of -40V, the correction will be 0 V this time.

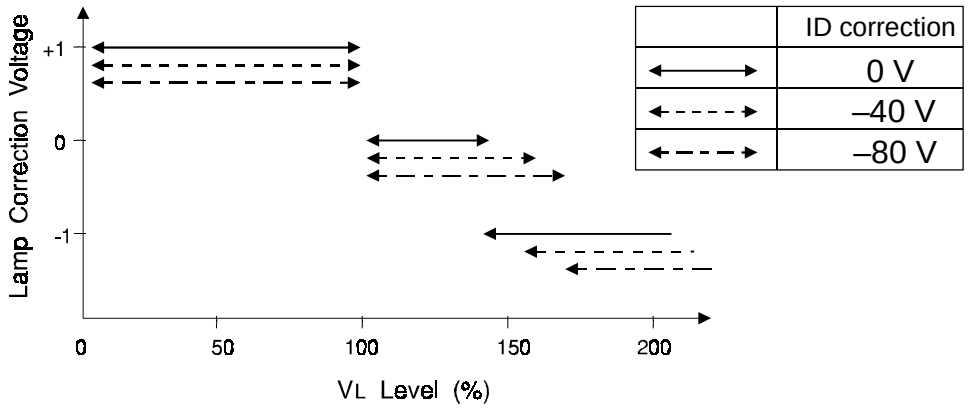

1.4.3 T/H Correction

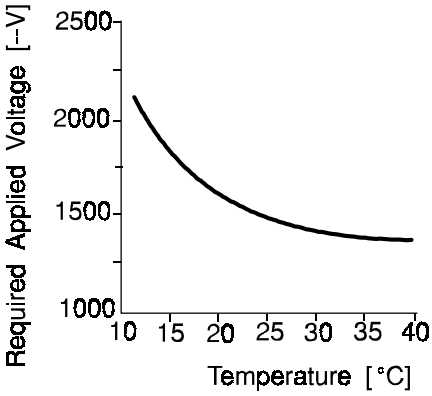

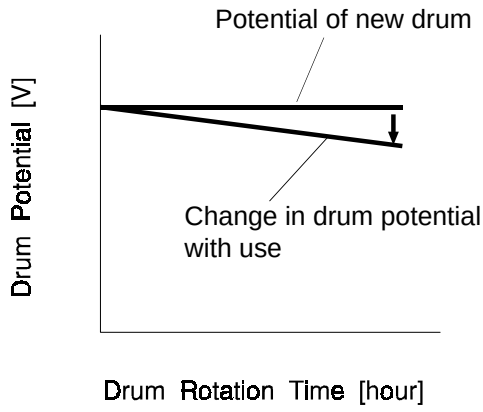

The drum charge efficiency is the ratio of the charge actually on the drum to the charge that was applied to the drum. It varies with the temperature around the drum charge roller. It drops off at lower temperatures, so the lower the temperature is, the higher the charge that is required.

Also, as the drum ages, the photoconductive layer gets worn. This causes a decrease in the drum potential after charging.

The drum charge thermistor detects the temperature (T) around the drum charge roller. The drum charge roller voltage is changed to account for the effects of temperature on drum charge efficiency.

The CPU also keeps track of the drum rotation time (H) that corresponds to the wear on the drum surface. The drum charge roller voltage is increased at set intervals.

These corrections for the drum charge roller voltage are called T/H correction.

The T/H correction that is applied during copying differs from that applied when making ID sensor patterns. See below for how the correction is determined.

The T/H correction difference between the A153, A155, and A156 copiers and the A157, A159, and A160 copiers is a result of the difference in copy processing speed (200 mm/s for the A153, A155, and A156 copiers, compared with 150 mm/s for the A157, A159, and A160 copiers).

Table 14. T/H Correction (Copying) - Base drum charge voltage = -1500 V

A153, A155, and A156 copiers

Drum Charge Roller Temperature (T)	Drum Rotation Time (H)		
	0 ≤ H < 40	**40 ≤ H < 110**	**110 ≤ H**
37.1 ≤ T	-60.0	-60.0	-60.0
29.6 ≤ T < 37.1	-203.4 + 3.9xT	-203.4 + 3.9xT	-203.4 + 3.9xT
17.9 ≤ T < 29.6	-729.1 + 21.6xT	-923.9 + 28.2xT	-1116.1 + 34.7xT
12.6 ≤ T < 17.9	-1345.1 + 56.0xT	-1705.8 + 71.9xT	-2068.9 + 87.9xT
T < 12.6	-639.0	-800.0	-961.0

A157, A159, and A160 copiers

Drum Charge Roller Temperature (T)	Drum Rotation Time (H)		
	0 ≤ H < 40	**40 ≤ H < 110**	**110 ≤ H**
32.4 ≤ T	-80.0	-80.0	-80.0
28.2 ≤ T < 32.4	-426.7 + 10.7xT	-426.7 + 10.7xT	-426.7 + 10.7xT
18.0 ≤ T < 28.2	-621.8 + 17.6xT	-768.4 + 22.8xT	-912.2 + 27.9xT
12.4 ≤ T < 18.0	-1028.6 + 40.2xT	-1357.2 + 55.5xT	-1689.7 + 71.1xT
T < 12.4	-530.0	-669.0	-808.0

Table 15. T/H Correction (VSP Pattern) - Base drum charge = -1300 V

A153, A155, and A156 copiers

Drum Charge Roller Temperature (T)	Drum Rotation Time (H)		
	0 ≤ H < 40	**40 ≤ H < 110**	**110 ≤ H**
37.1 ≤ T	+40.0	+40.0	+40.0
29.6 ≤ T < 37.1	-103.4 + 3.9xT	-103.4 + 3.9xT	-103.4 + 3.9xT
17.9 ≤ T < 29.6	-489.9 + 16.9xT	-603.8 + 20.8xT	-717.6 + 24.6xT
12.6 ≤ T < 17.9	-862.5 + 37.7xT	-1164.2 + 52.1xT	-1465.9 + 66.4xT
T < 12.6	-387.0	-508.0	-629.0

A157, A159, and A160 copiers

Drum Charge Roller Temperature (T)	Drum Rotation Time (H)		
	0 ≤ H < 40	**40 ≤ H < 110**	**110 ≤ H**
32.4 ≤ T	+24.0	+24.0	+24.0
28.2 ≤ T < 32.4	-283.9 + 9.5xT	-283.9 + 9.5xT	-283.9 + 9.5xT
18.0 ≤ T < 28.2	-402.6 + 13.7xT	-532.4 + 18.3xT	-662.2 + 22.9xT
12.4 ≤ T < 18.0	-719.3 + 31.3xT	-919.5 + 39.8xT	-1117.6 + 48.2xT
T < 12.4	-331.0	-426.0	-520.0

For example, when copying with an A157 copier at 25°C with a drum that has a rotation time of 100 hours:

- The T/H correction is -768.4 + (22.8 x 25) V = -198.4 V.
- The drum charge roller voltage is the base voltage plus the T/H correction
  = (-1500) - 198.4
  = -1698.4 V.

1.5 PROCESS CONTROL DURING ABNORMAL CONDITIONS

When an abnormal sensor condition occurs, some process controls are disabled.

<table>
<tr><th rowspan="2">Abnormal Condition</th><th colspan="4">Process Control</th></tr>
<tr><th>ID Sensor Adjustment</th><th>V_R Correction</th><th>V_L Correction</th><th>ADS Sensor Adjustment</th></tr>
<tr><td>Thermistor Error</td><td colspan="4" rowspan="5">Disabled</td></tr>
<tr><td>TD Sensor Adjustment Error</td></tr>
<tr><td>TD Sensor Detection Error</td></tr>
<tr><td>V_{SP} Error</td></tr>
<tr><td>V_L Error</td></tr>
<tr><td>ID Sensor Adjustment Error</td><td rowspan="2">Executed</td><td colspan="3" rowspan="2">ID sensor adjustment error → Disabled
If the ID sensor can be adjusted → Executed</td></tr>
<tr><td>V_{SG} Error</td></tr>
</table>

1.6 SUMMARY

1.6.1 Process Control and Sensor Detection Timing

A summary of process control and correction timing is shown below.

Correction	Electrical Component	Sensor Output Used	Correction Timing		Corrected Value
			Forced Correction	Automatic Correction	
Manual ID correction	Operation panel	—	—	Every copy in manual ID mode	• Lamp voltage • Dev. bias
Reproduction ratio correction	Operation panel	—	—	Every copy in reduce/enlarge mode	Development bias
ADS correction	ADS sensor	V_{ADS} (pattern) V_{ADS} (original)	—	• ADS Mode: Once per original (ARDF mode), or once when the Start key is pressed (Platen mode)	Development bias
			New drum, ADS sensor, or exposure lamp	Every 1000 copies	• V_{ADS} (pattern) is stored
ID correction and Toner density control	ID sensor	V_{SG}	New drum or ID sensor replacement	At the start of each copy job	• Dev. bias • Toner supply clutch ON time
		V_{SP}		About every 10 copies	
	TD sensor	V_T	When the developer is changed	Every copy	
V_R correction	ID sensor	V_{RP}, V_{RG}	New drum or ID sensor replacement	After every 1000 copies	• Drum charge roller voltage • Dev. bias
V_L correction	ID sensor	V_{LP}, V_{LG}	New drum or exp. lamp		Lamp voltage
T/H correction	• Drum charge roller thermistor • RAM Board	T: (temperature) H: (drum rotation time)	H is reset at the drum initial setting	Every copy	Drum charge roller voltage

1.6.2 Process Control Checks During Machine Operation

This section shows what the machine checks and recalibrates to control the copy process at different times.

Every Copy

The machine automatically adjusts the following process control parameters every copy.

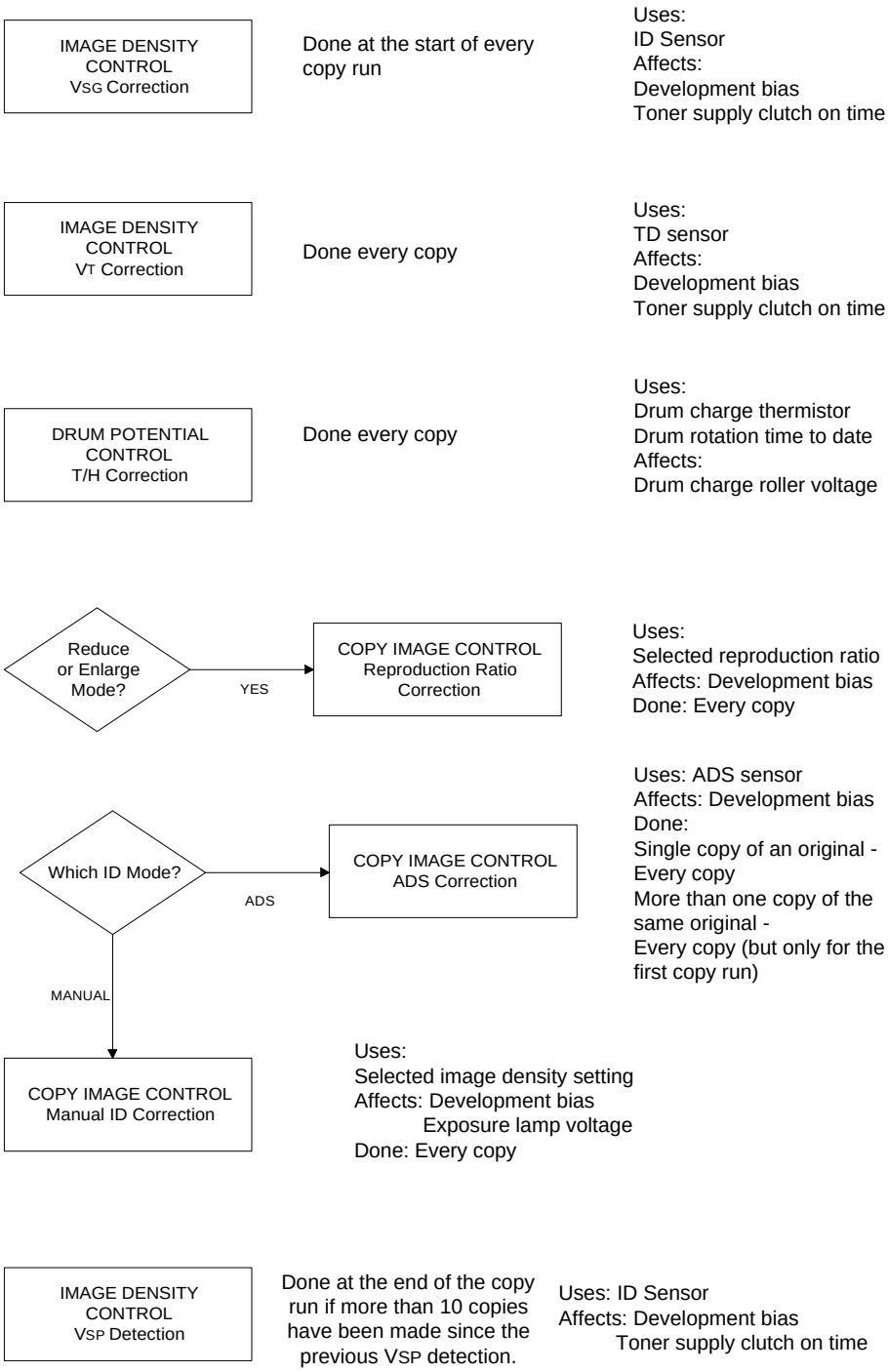

Every 1000 Copies

After every 1,000 copies, the machine calibrates the following reference values for the various processes that are used in process control.

NOTE: If the auto process control mode has been disabled with SP3-801, this process control cycle will not be performed.

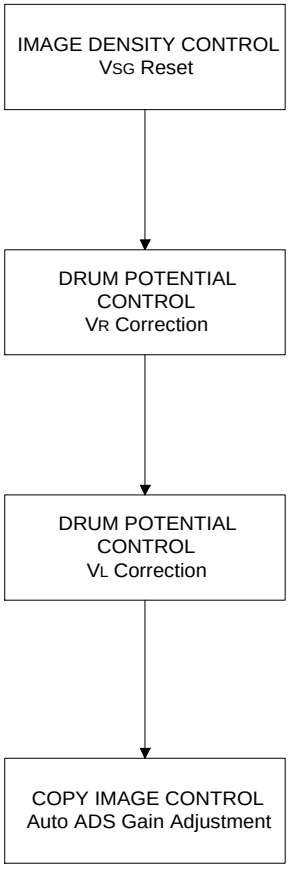

Resets V_{SG} to 4 ± 0.2 V.

Measures V_{RP}
Sets $V_{RG} = V_{SG}$

Measures V_{LP}
Sets $V_{LG} = V_{SG}$

Adjusts ADS sensor ouput voltage for the ADS sensor pattern to 2.7 ± 0.1 V.

Uses:
ID sensor
Affects:
Development bias
Toner supply clutch on time

Uses:
ID sensor
Affects:
Development bias
Drum charge roller voltage

Uses:
ID sensor
Affects:
Exposure lamp voltage

Uses:
ADS sensor output
Affects: Development bias

After Adding New Developer

The technician must do the following SP mode after adding new developer.

IMAGE DENSITY CONTROL
TD Sensor Initial Setting

SP 2-214
Resets the TD sensor output to 2.5 ± 0.1 V
Resets ID correction for the V_{SP} pattern to zero (this affects development bias and exposure lamp voltage)

After Installing a New Drum

The technician must do a series of SP modes to reset the process control parameters related to the drum.

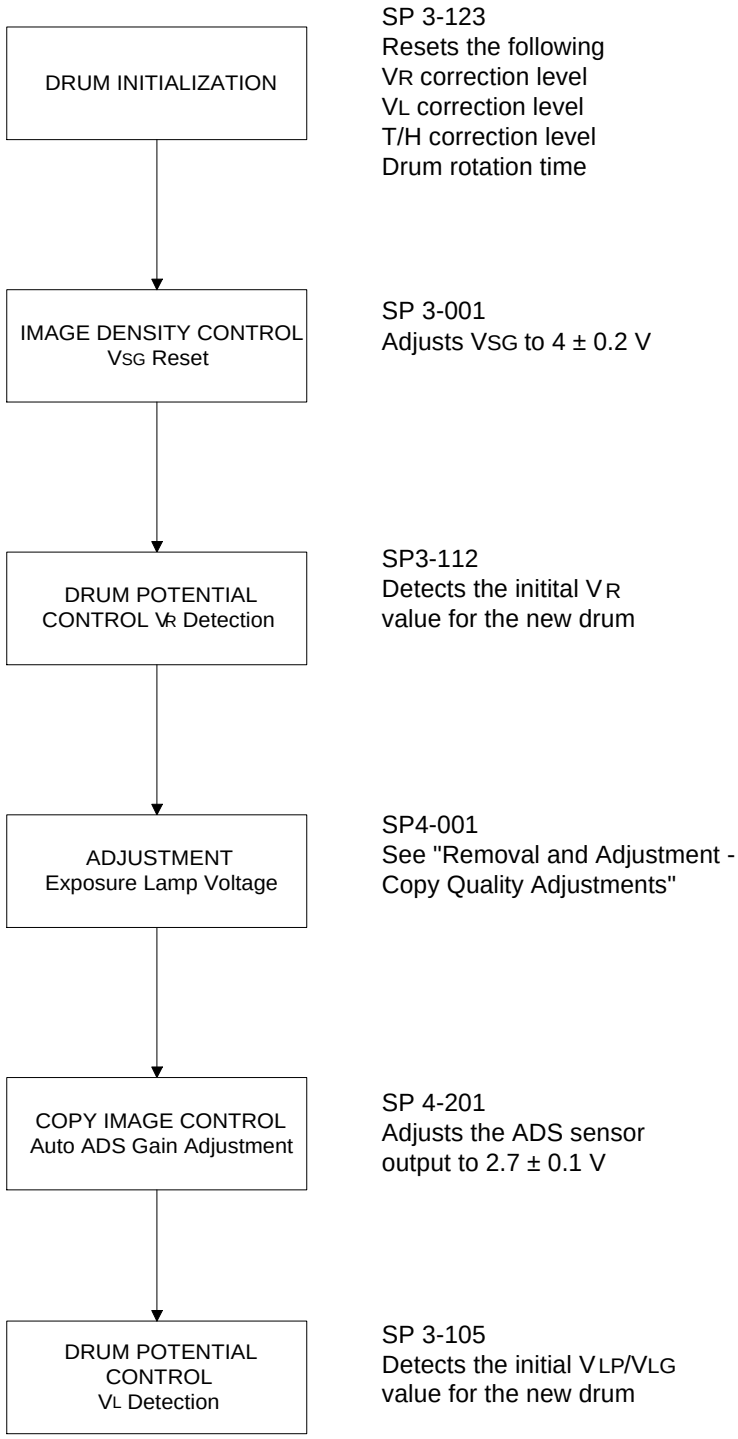

Development bias, drum charge voltage, and exposure lamp voltage

The following table shows how process control affects development bias, drum charge, and exposure lamp voltages for various machine operations.

Mode			Development Bias [V]	Drum Charge Voltage [V]	Exposure Lamp Voltage [V]
Copying	ADS mode		(–240) + ADS correction + Reproduction ratio correction + V_R correction + B	(–1500) + V_R correction + T/H correction + C	Vexp + V_L correction
	Manual ID mode	ID Level 1 ~ 6	(–240) + Manual ID correction + Reproduction ratio correction + V_R correction + B		Vexp + Manual ID correction + V_L correction
		ID Level 7	(–240) + Lightest ID level dev.bias + Reproduction ratio correction + V_R correction + B		
VSP Pattern Detection			(–300) + BP + ID correction	(–1300) + T/H correction + CP	0
VR Pattern Detection			0	(–1500) + V_R correction + T/H correction + C	0
V_L Pattern Detection	Forced V_L Detection		BL + V_R correction + V_{BL} (ID)		Vexp
	V_L Detection		BL + (–25) + V_R correction + V_{BL} (ID)		Vexp + V_L correction
Non Image Area			(–200) + V_R correction + V_{BL} (ID)	0	0
Auto ADS Gain Adjustment			0	0	Vexp + V_L correction

NOTE:

B = Development bias adjustment factor, selected with SP2-201-001.
BP = Correction to the development bias used for making for V_{SP} patterns, selected with SP2-203.
BL = The value of the development bias that was reached during the most recently performed forced V_L detection routine.
V_{BL} (ID) = ID compensation factor based on the current ID correction used for making V_{SP} patterns.
C = Correction to the drum charge voltage, selected with SP2-001.
CP = Correction to the drum charge voltage for maknig V_{SP} patterns, selected with SP2-003.
Vexp = Exposure lamp voltage, selected with SP4-001.

2. DRUM

2.1 DRUM UNIT

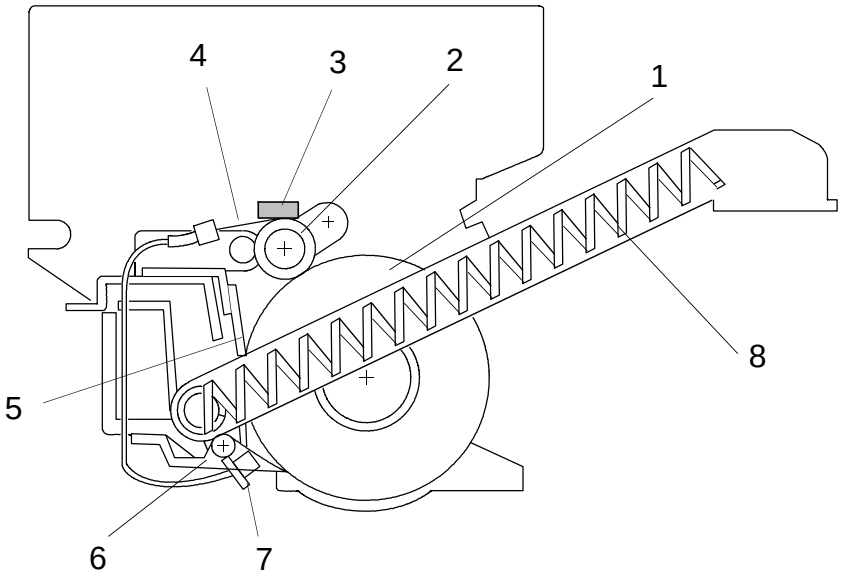

The drum unit consists of the components shown in the above illustration. An organic photoconductor (OPC) drum (diameter: 60 mm) is used for this model.

1. OPC Drum
2. Drum Charge Roller
3. Drum Charge Roller Cleaner
4. Drum Charge Thermistor
5. Cleaning Blade
6. Pick-off Pawl
7. ID Sensor
8. Recycled Toner Transport Coil

2.2 DRIVE MECHANISM

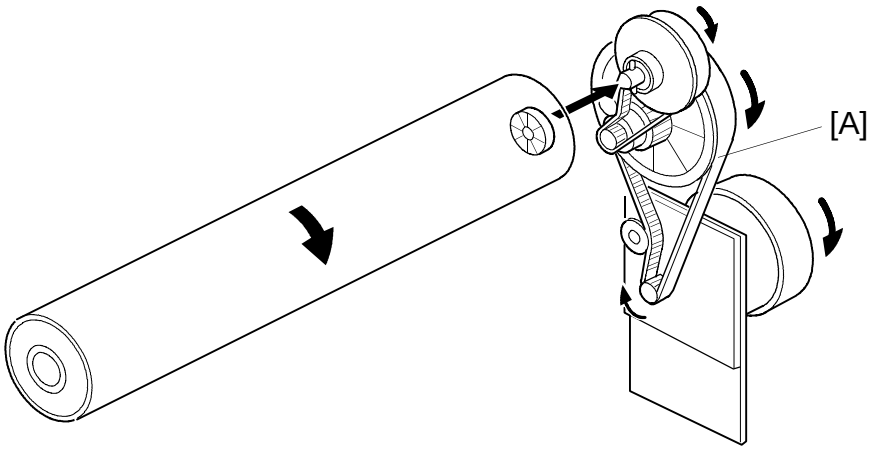

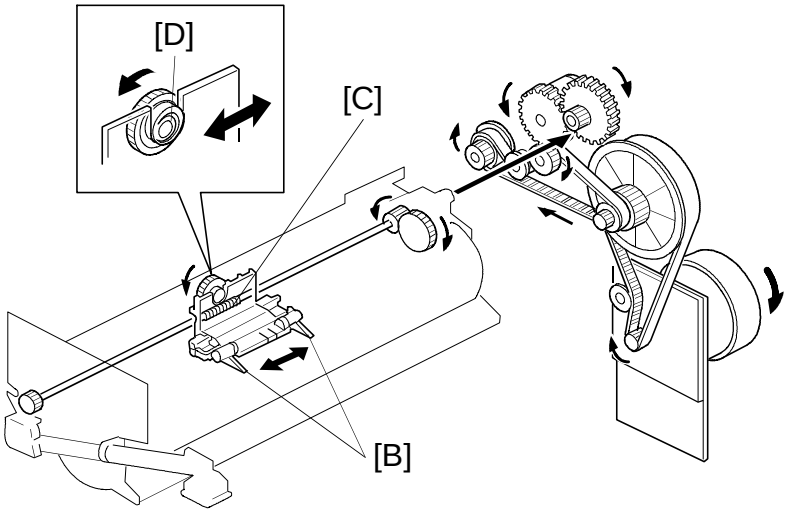

The drive from the main motor is transmitted to the drum drive pulley via the timing belt [A]. The pick-off pawls [B] are always in contact with the drum surface under a weak spring pressure. They move from side to side during the copy cycle. This movement is made with a worm gear [C] and an eccentric cam gear [D].

3. DRUM CHARGE

3.1 OVERVIEW

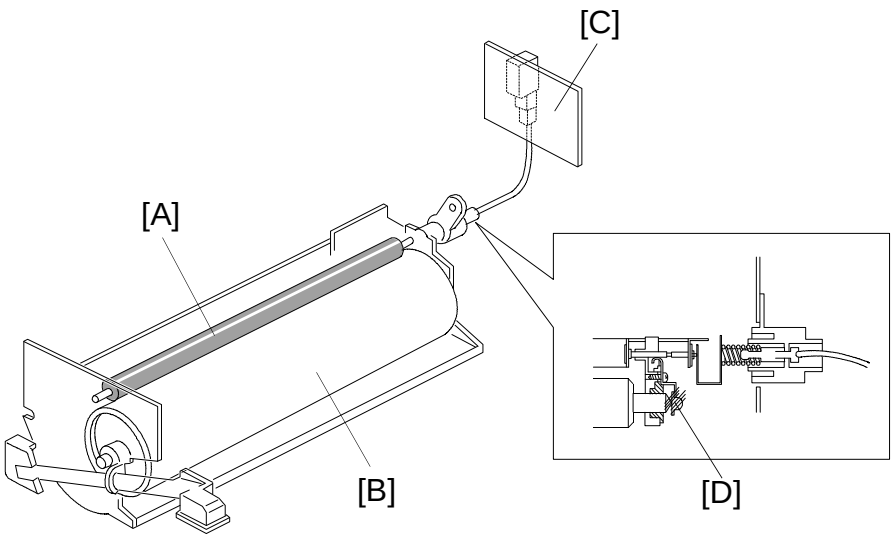

This copier uses a drum charge roller system instead of a corona wire scorotron system to charge the drum. For the copy image area or during process control, the drum charge roller [A] contacts the surface of the OPC drum [B] to give a sufficient negative charge.

The drum charge roller system has the following advantages over the corona wire scorotron system:

- The amount of ozone generated during drum charging is less than 1/100 of that for a corona wire scorotron system.
- The applied voltage is 1/2 ~1/3 that of a wire scorotron system.
- The efficiency of drum charging is high.

Thanks to the above advantages, no ozone filter is required for this copier.

The CB high voltage supply board [C] gives a constant dc voltage of –1500 V (–1300 V for the V_{SP} pattern) to the drum charge roller at the charge roller terminal [D]. This gives the drum surface a negative charge of –900 V (–600 V for the V_{SP} pattern).

3.2 DRUM CHARGE ROLLER DRIVE MECHANISM

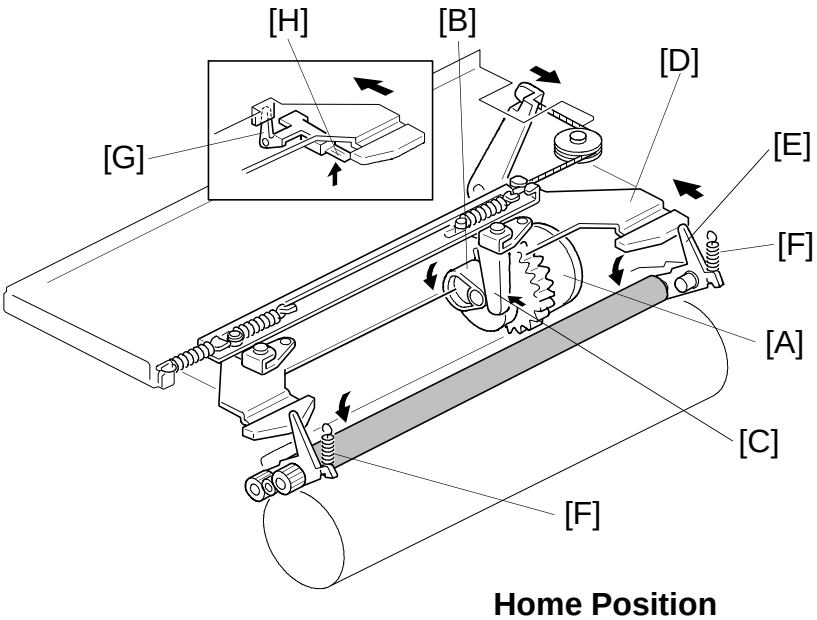

Home Position

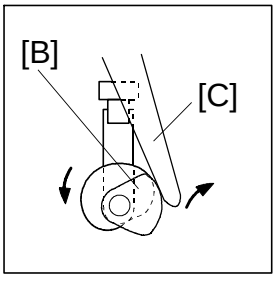

The drum charge roller is away from drum

During Image Processing

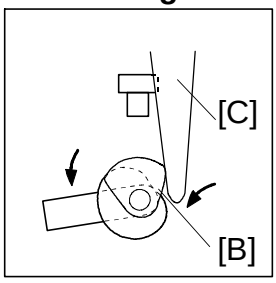

The drum charge roller contacts the drum

To prevent toner from adhering to the drum charge roller and to prevent the drum charge roller from sticking to the OPC drum, the drum charge roller contacts the OPC drum only under the following conditions:

(1) When the image processing area comes under the drum charge roller
(2) When process control is executed.

This function is performed by the transfer belt contact clutch [A] (a one-third turn clutch) with cam [B] located on the rear side plate of the copier. When the clutch [A] is driven one third of a complete rotation, the cam [B] downs up the lever [C]. The lever is linked with the plate [D] which releases the on-off lever [E] of the drum charge roller. Then the drum charge roller contacts the drum as a result of the pressure from the two springs [F]. At the same time, plate [D] also pushes the lever [G] on the drum charge thermistor [H]. Then, the drum charge thermistor moves away from the drum charge roller. When the start key is pressed, the temperature around the drum chanrge roller is measured while the drum charge thermistor contacts the drum charge roller. After that, the temperature is measured while the drum charge thermistor is away from the drum charge roller.

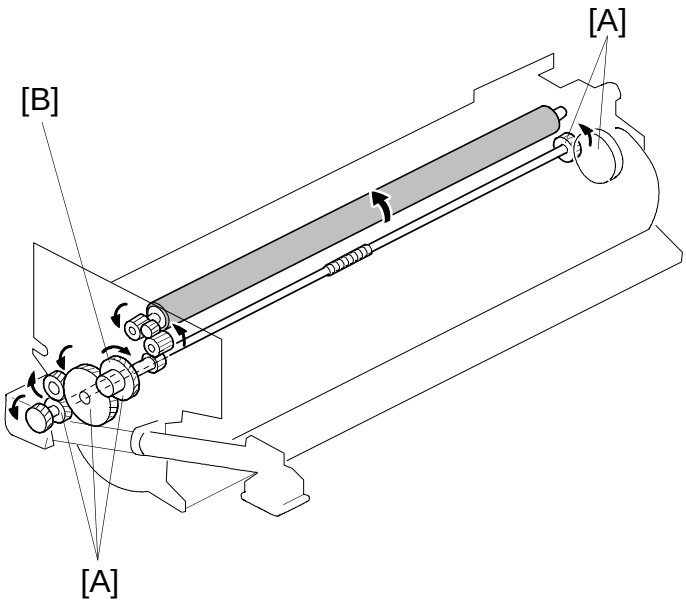

When the drum charge roller does not contact the drum, the drum charge roller is driven by the main motor through some gears [A]. (The roller speed is 50 rpm for A153, A155, and A156 copiers, and 37 rpm for A157, A159, and A160 copiers.) At this time, the roller touches the cleaning pad, and this helps keep the roller clean, although a cleaning routine automatically takes place at the end of every copy cycle (see below).

When the drum charge roller contacts the drum, the force (torque) imparted by the drum becomes greater than the force transmitted through the clutch [B]. Then, the drum charge roller rotates with the drum rotation.

The drum charge roller comes away from the drum after every copy job. For 2 seconds after the end of every copy job and for 10 seconds after every copy interval set by SP2-901, the drum charge roller is driven by the main motor via gears [A] for cleaning (see "Drum Charge Roller Cleaning").

After cleaning, the main motor stops. While the main motor is not rotating, the drum charge roller is kept away from the drum. This prevents the drum charge roller from adhering to the drum.

3.3 DRUM CHARGE ROLLER CLEANING

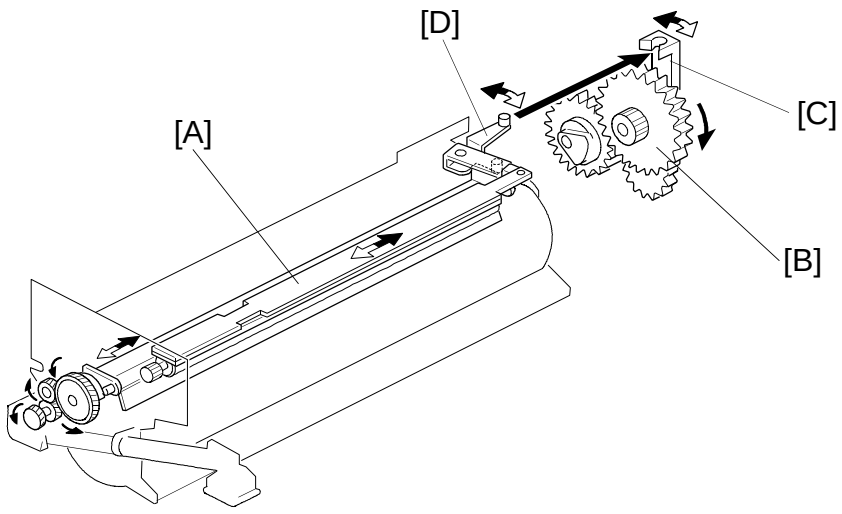

If the drum charge roller gets dirty, drum charge efficiency decreases. This affects the copy quality, for example causing vertical white lines.

While the drum charge roller is away from the drum but still rotating, it brushes against the cleaning pad [A], which helps to keep it clean.

However, there is a specific drum charge roller cleaning routine which is described below. It is executed at the following intervals:

(1) For 2 seconds at the end of every job
(2) For 10 seconds after the copy job interval set by SP2-901.

After the copy job, the drum charge roller comes away from the drum and contacts the drum charge roller cleaner pad [A]. The main motor still rotates during cleaning and drives the gear [B] to swing the lever [C] via an eccentric cam. This lever swings the arm [D] and the arm gives a side-to-side movement to the drum charge roller cleaner.

The cleaning interval set by SP2-901 is as follows:

SP2-901 setting: 0: Every 1000 copies (10 seconds) [default]
1: Every 500 copies (10 seconds)
2: Every 200 copies (10 seconds)
3: Every 100 copies (10 seconds)

For a user who mainly makes consecutive high volume copy runs, the drum charge roller is likely to get dirty early, because the interval between jobs (and thus the interval between end-of-copy-job cleaning runs) is longer than for small volume intermittent copy runs. In this case, the copy count interval for cleaning must be reduced with SP2-901, to have the ten-second cleaning routine done more often.

3.4 TEMPERATURE COMPENSATION

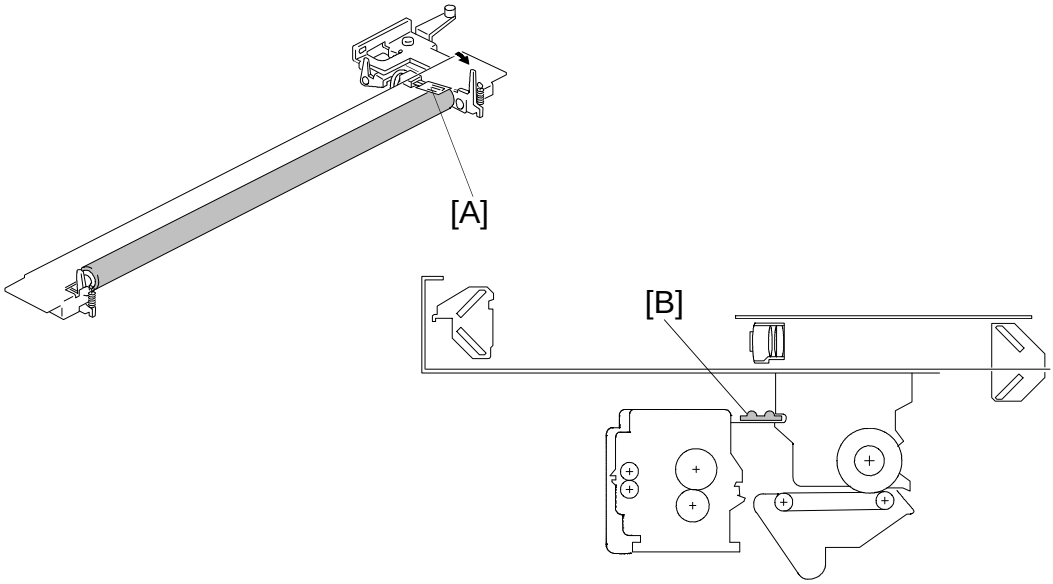

The required applied voltage varies with the temperature around the drum charge roller. The lower the temperature is, the higher the applied voltage required. This affects the drum charge efficiency.

To compensate for these characteristics, the drum charge thermistor [A] detects the temperature around the drum charge roller. Before the copy job starts, the drum charge thermistor contacts the drum charge roller, T/H correction for the first copy uses the temperature detected while the drum charge thermistor contacts the drum charge roller. After the coy job starts, the thermistor is away from the drum charge roller. After the 2nd copy, T/H correction uses the temperature detected while the drum charge thermistor is away from the drum charge roller. Using the detected temperature, T/H correction is performed. (See "T/H correction" in the Process Control section for details.)

To avoid low drum charge efficiency for the first copy after the main switch is turned on, there is a drum heater [B] located over the drum and drum charge roller. This heater is turned on while the copier main switch is turned off. It keeps the temperature around the drum and drum charge roller over 15°C. For this heater to operate, the power cord of the copier must be plugged in even when the main switch is turned off.

4. OPTICS

4.1 OVERVIEW

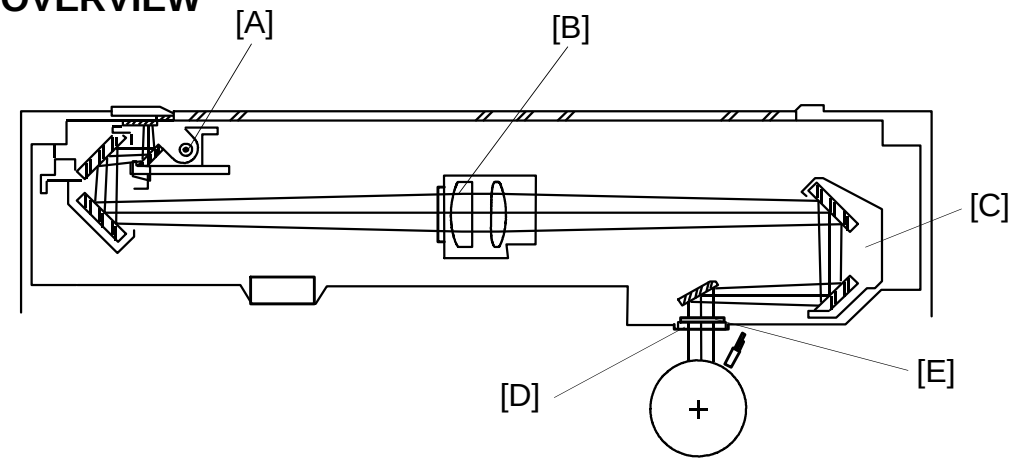

The optics unit reflects an image of the original on the exposure glass onto the OPC drum. This forms a latent electrical image of the original.

In this model, a halogen lamp is used for the exposure lamp [A]. The lamp surface is frosted to ensure even exposure. The specifications of the lamp are as follows. Note that the A153/155/156 models are faster, so they need more light during exposure.

	115V Machines	230V Machines
A153/A155/A156	97V 280W	85V 280W
A157/A159/A160	97V 200W	85V 200W

Six mirrors are used to make the optics unit smaller and obtain a wide reproduction ratio range (50 ~ 200%).

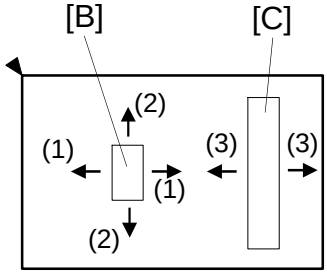

The lens [B] is driven by two stepper motors for (1) vertical movement (parallel to the paper feed direction) and (2) horizontal movement. Also, to correct for focal length change in reduction and enlargement modes, the third scanner unit [C] (4th and 5th mirrors) is moved (3) vertically (parallel to the paper feed direction) by another stepper motor.

A toner shield glass [D] and a green filter [E] are installed above the OPC drum to improve red original reproduction.

The CPU monitors the temperature around the optics cavity through a thermistor which is under the left scale. When the detected temperature reaches a certain threshold value (see the following table), the optics cooling fan(s) on the rear of the optics side plate starts to draw cool air into the optics cavity. The hot air exits through the vents in the upper cover. The fan(s) operate until the temperature drops below the threshold temperature. Note that the A153/155/156 models have two fans; this is because the exposure lamp is more powerful in this model, so more cooling is needed.

	A153/A155/A156	**A157/A159/A160**
Rotating temperature	45°C	40°C
Number of fans	2	1

The thermofuse (located on the 1st scanner) provides back-up overheat protection. It opens at 121°C and removes ac power to the exposure lamp. The thermofuse is not resettable.

An optics anti-condensation heater is available as optional equipment (it is also a service part). To prevent moisture from forming on the optics, it turns on while the main switch is turned off.

The main board controls the exposure lamp voltage through the ac drive board. The exposure lamp voltage is based on the base lamp voltage (set by SP4-001) and various correction factors. The corrections depend on whether the image density is manually selected or whether ADS mode is selected. For details, see Process Control - Summary.

4.2 SCANNER DRIVE

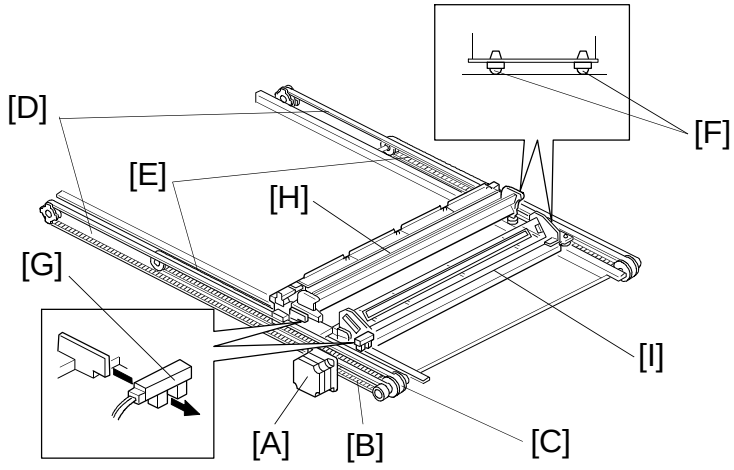

In this model, a stepper motor [A] drives the scanners via a timing belt [B], scanner drive pulley [C], and two long & short scanner drive belts [D,E]. To prevent skewing, both ends of each scanner are driven. The scanners have sliders [F], which ride on guide rails.

Unlike previous models, the scanner drive pulleys are made of aluminum. Also, bearings at the ends of the scanner drive pulley shaft assure reliable scanner speed and movement. The timing belt tension has increased as well.

The scanner home position is detected by the home position sensor [G]. The main CPU sends the appropriate pulses to the scanner drive motor (determined from the detected original size) to determine the scanner return position.

The first scanner [H], which consists of the exposure lamp and the first mirror, is connected to the two long scanner drive belts with belt clamps. The second scanner [I], which consists of the second and third mirrors, is connected to the two short scanner drive belts with belt clamps.

The first scanner drive speed in full size mode is:
- 200 (mm/s) for A153/A155/A156 copiers
- 150 (mm/s) for A157/A159/A160 copiers

The first scanner drive speed for a selected reproduction ratio is:
- 200/M (mm/s) for A153/A155/A156 copiers
- 150/M (mm/s) for A157/A159/A160 copiers

NOTE: M = Selected reproduction ratio (0.5 - 2.0)

The second scanner moves at half the velocity, and the returning speed of the first scanner is 1150 (mm/s) for all models.

4.3 LENS DRIVE

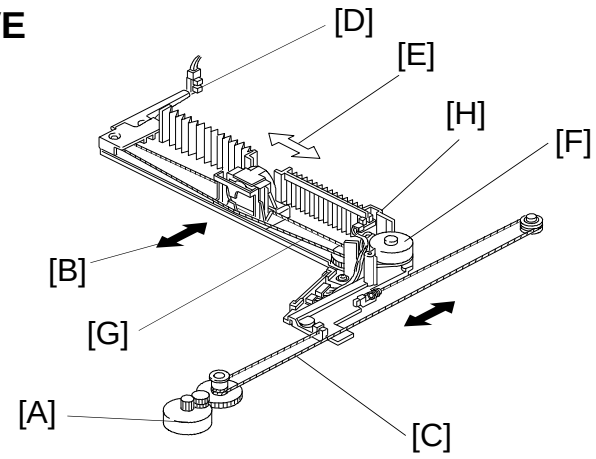

– Vertical (Parallel to the Paper Feed Direction) –

The lens vertical drive motor [A] changes the vertical position [B] of the lens in accordance with the selected reproduction ratio (50 ~ 200%). The motor, which is a stepper motor, drives the lens through the lens drive wire [C].

The lens vertical home position sensor [D] detects the vertical position of the lens for full size mode. The vertical position of the lens for the selected reproduction ratio is determined by the number of pulses from the full size position.

– Horizontal (Perpendicular to the Paper Feed Direction) –

The original's horizontal position on the exposure glass varies depending on the mode (platen or ADF). This prevents problems such as skewing that are caused when the original moves too close to the rear scale in automatic feed mode. However, the center is the standard position for copy paper feed.

Therefore, the horizontal position [E] of the lens has to be changed in accordance with paper size, reproduction ratio, and original feed mode.

The lens horizontal drive motor [F] drives the lens through the lens drive wire [G]. The lens horizontal home position sensor [H] detects the horizontal position of the lens. The home position of the lens is the horizontal position for A4/LT sideways in full size and platen mode; the positions for other conditions are determined by counting the number of motor drive pulses from the home position.

Since this model has a horizontal lens drive mechanism, side-to-side registration adjustment for each feed station can be done easily using SP mode (SP4-011).

4.4 HORIZONTAL LENS POSITIONING

4.4.1 Original Alignment Position

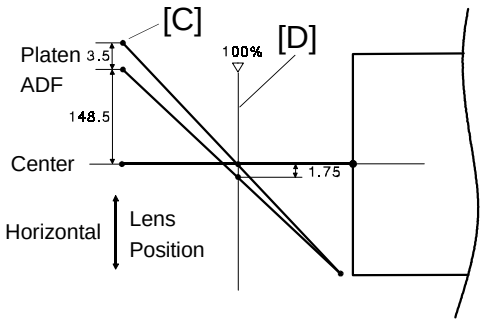

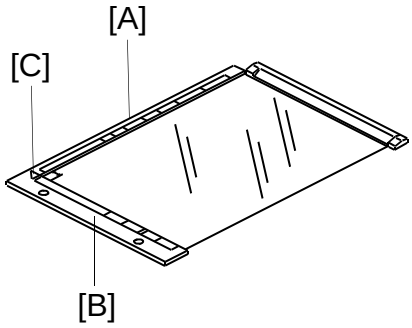

There are two standard original alignment positions: one for platen mode and one for ADF mode.

In platen mode, the original is aligned with both the rear [A] and the left [B] original scales (the rear left corner [C] is the standard alignment position).

In ADF mode, the original alignment position is 3.5 mm to the front of the platen mode original alignment position. This is to maintain the original transport path (which is at 3.5 mm from the rear scale).

On line [D] in the above diagram, you can see the horizontal positions of the lens for each original mode, with identical sizes of paper.

4.4.2 Paper Size

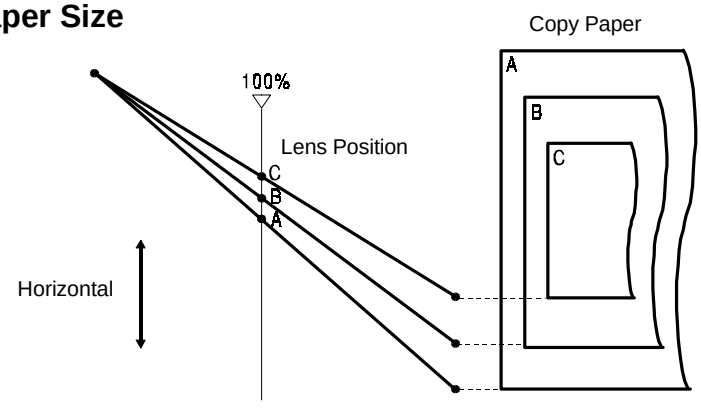

To maintain a high paper feed performance, the center line of the exposure glass is assigned to be the standard paper feed position. However, as described above, the original alignment position for original feed is not in the center of the exposure glass in this model. Therefore, the lens horizontal position has to be changed in accordance with the paper size.

The diagram shows the horizontal position of the lens for three paper sizes (A, B, and C) in full size mode.

4.4.3 Reproduction Ratio

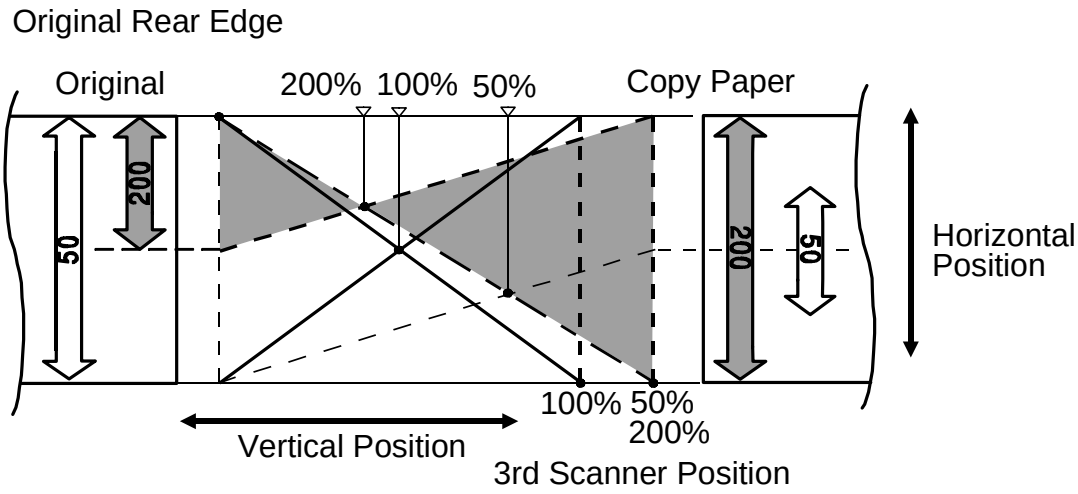

The horizontal position of the lens has to be changed when a reproduction ratio is selected. This is because the original is aligned at the rear left corner but the copy paper is fed down the center.

When the reproduction ratio is changed, the vertical position of the lens is changed. At the same time, the total focal length has to be changed to adjust the image focusing. For this focal length change, the vertical position of the 3rd scanner is also adjusted.

The figure shows the vertical and horizontal position of the lens for ratios of 50, 100 and 200%.

4.5 3RD SCANNER DRIVE

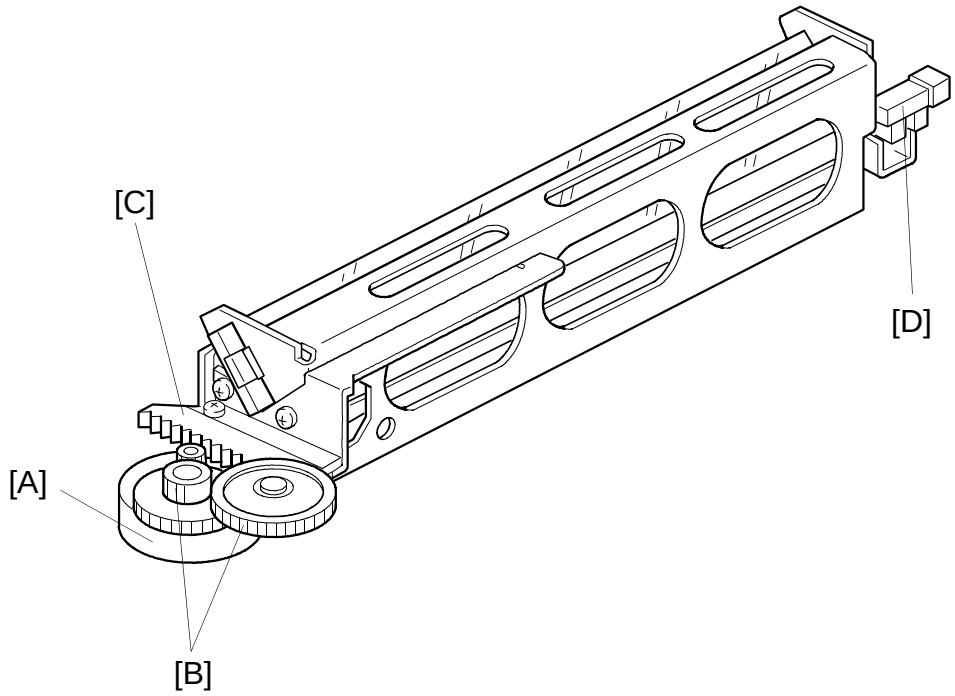

To compensate the focusing for reproduction and lens position changes, the 3rd scanner (4th and 5th mirrors) position is changed.

The 3rd scanner drive motor [A] (a stepper motor) changes the 3rd scanner position through the pinion gears [B] and the rack gear [C].

The 3rd scanner home position sensor [D] detects the 3rd scanner position for full size mode. The machine keeps track of the 3rd scanner position based on the number of motor drive pulses.

4.6 UNEVEN LIGHT INTENSITY CORRECTION

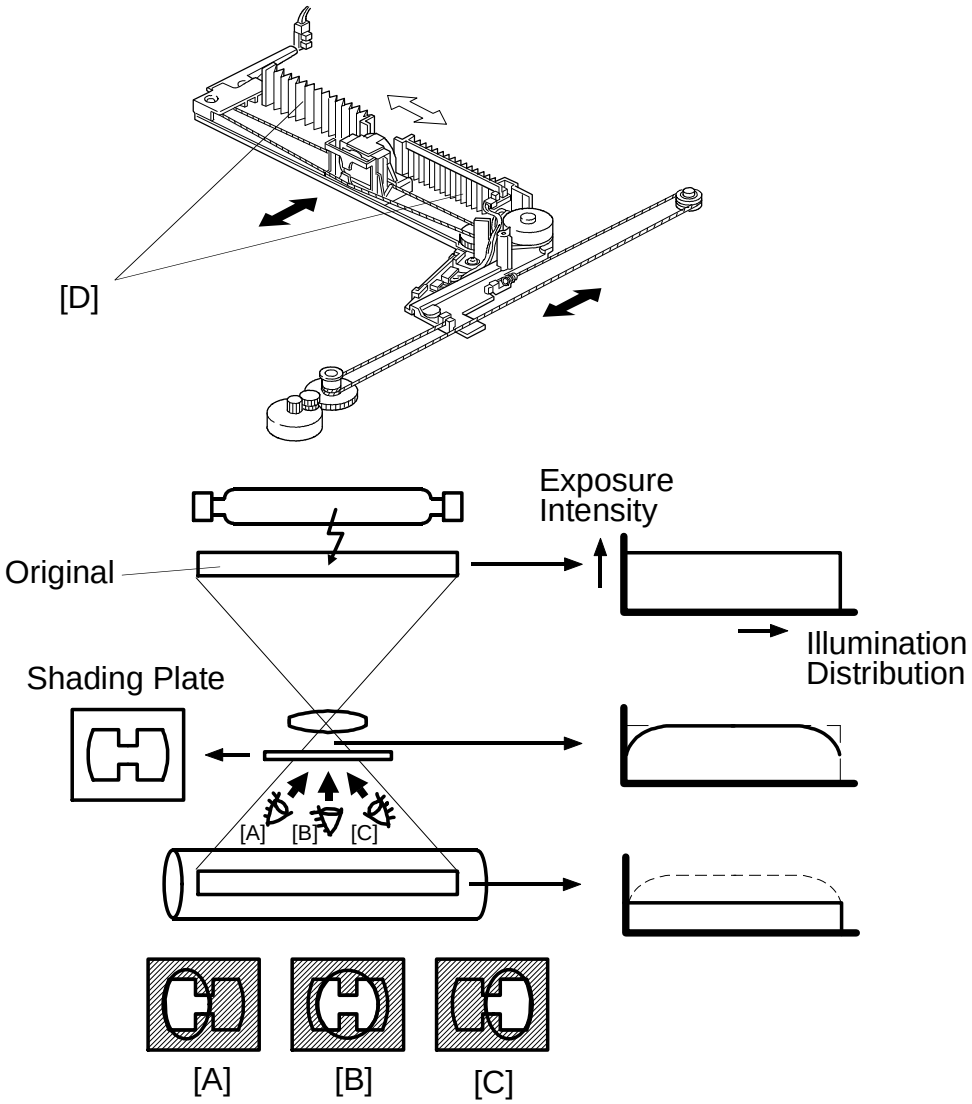

The entire exposure lamp surface is frosted to ensure even exposure.

To compensate for reduced light at the edge of the lens, a shading plate is placed in front of the lens. The shading plate is fixed to the lens unit.
The shading plate corrects the light intensity when the lens horizontal position is shifted (from [A] to [C]).

Also, two shading mylars [D] intercept any stray reflected light from outside the light path.

4.7 ORIGINAL SIZE DETECTION IN PLATEN MODE

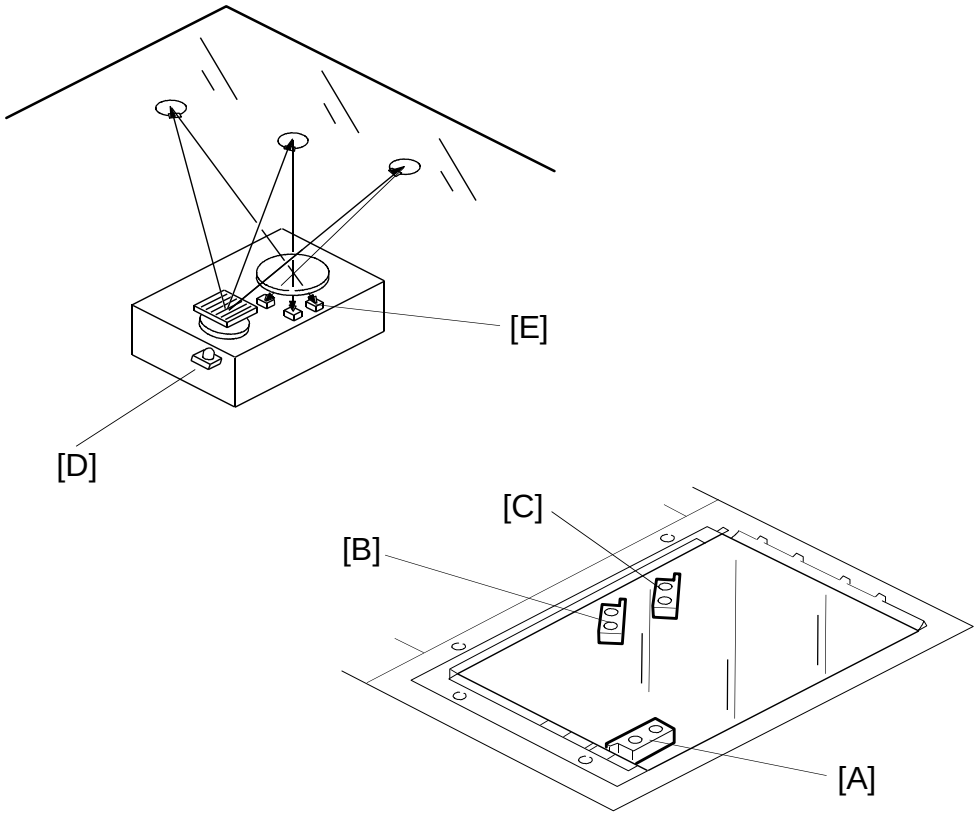

There are three reflective sensors in the optics cavity for original size detection. The Original Width Sensor [A] detects the original width and the Original Length Sensor-1 [B] and Original Length Sensor-2 [C] detects the original length. These are the APS (Auto Paper Select) sensors.

For North American models, there is an optional length sensor for detecting 11" x 15" originals.

Inside each APS sensor, there is an LED [D] and either three photoelectric devices [E] (for the width sensor) or one photoelectric device (for each length sensor). In the width sensor, the light generated by the LED is broken up into three beams and each beam scans a different point of the exposure glass (in each length sensor, there is only one beam). If the original or platen cover is present over the scanning point, the beam is reflected and each reflected beam exposes a photoelectric device and activates it.

While the main switch is on, these sensors are active and the original size data is always sent to the main CPU. However, the main CPU checks the data only when the platen cover is opened.

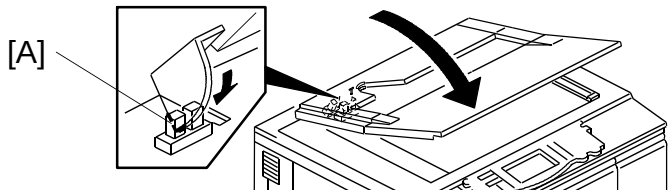

Original Size		Length Sensor			Width Sensor		
A4/A3 version	**LT/DLT version**	1	2	Op	3	4	5
A3	11" x 17"	O	O	O	O	O	O
—	(11" x 15")	O	O	X	O	O	O
B4	10" x 14"	O	O	O	O	O	X
F4	8 1/2" x 14"	O	O	O	O	X	X
F	8" X 13"	O	O	O	O	X	X
A4–L	8 1/2" x 11"	X	O	O	O	X	X
B5–L	—	X	O	O	X	X	X
A5–L	5 1/2" x 8 1/2"	X	X	O	X	X	X
A4–S	11" x 8 1/2"	X	X	O	O	O	O
B5–S	—	X	X	O	O	O	X
A5–S	8 1/2" x 5 1/2"	X	X	O	O	X	X

Note: –L= Lengthwise, –S = Sideways, O = High (Paper Present), X = Low

The original size data is taken by the main CPU when the platen position sensor [A] is activated. This is when the platen is positioned about 15 cm above the exposure glass. At this time, only the sensor(s) located underneath the original receive the reflected light and switch on. The other sensor(s) are off. The main CPU can recognize the original size from the on/off signals from the five sensors.

If the copy is made with the platen open, the main CPU decides the original size only from the sensor outputs when the Print key is pressed.

The above table shows the outputs of the sensors for each original size. The third length sensor (shown as "Op") is the optional length sensor for detecting 11" x 15" originals in North American models.

This original size detection method eliminates the necessity for a pre-scan and increases the machine’s productivity.

Original size detection using the ARDF is described in the manual for the ARDF.

4.8 AUTOMATIC IMAGE DENSITY CONTROL SYSTEM (ADS)

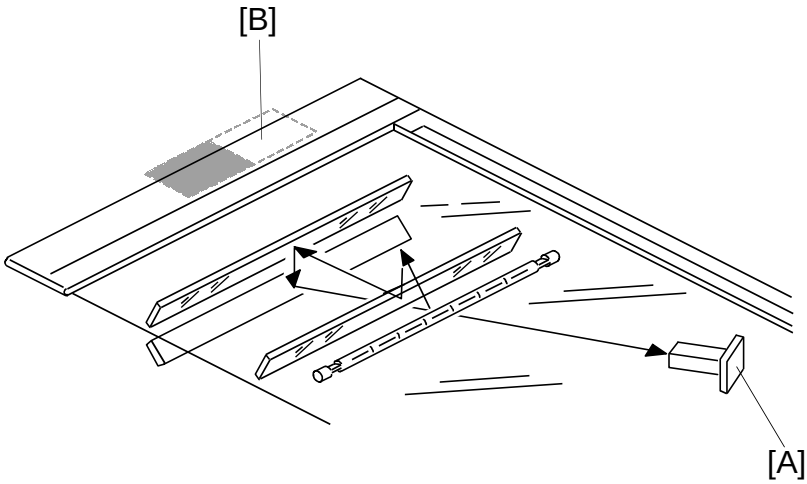

Just before taking a copy in ADS (Auto Image Density Select) mode, the ADS sensor [A] measures the original background density and the main CPU changes the development bias for the original to prevent dirty background from appearing on the copy. The exposure lamp voltage is fixed at the manual ID level 4 value (set by SP4-001) regardless of the input from the ADS sensor.

The ADS sensor board is mounted on the rear side of the optics side plate. The sensor board is covered by the sensor housing cover which has a small hole to allow light reflected from the original to reach the ADS sensor.

ADS Sensor Gain Adjustment (Every 1,000 Copies)

To maintain consistent image quality regardless of changes in the components of the optic path with time, the ADS sensor reference voltage is adjusted to 2.7 ± 0.1 V every 1K copies. The exposure lamp turns on at ID level 4, and the light reflected by the white ADS pattern [B] reaches the ADS sensor. The CPU adjusts the ADS gain value to make the output (V_{ADS} pattern) equal to 2.7 ± 0.1 V. The gain value is stored in the RAM board.

If the output cannot be made to equal 2.7 ± 0.1 Volts even if the gain is adjusted as far as it will go, the machine generates a Service Call code.

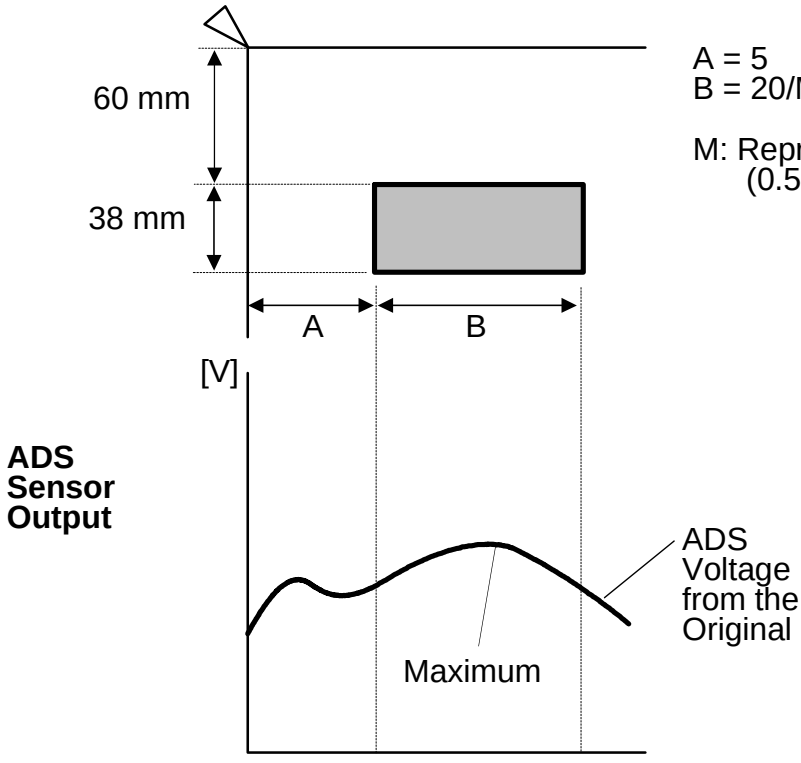

During Copying

To maintain good copy quality, the development bias changes depending on the background density detected by the ADS sensor.

In full size mode when the user selects ADS, the CPU samples the ADS sensor output across the original from 5 mm to 15 mm from the left scale edge. The CPU takes the maximum ADS sensor output during the sampling period and compares it with the ADS reference voltage (VADS [pattern]; see the previous page). Based on this comparison, the machine may adjust the development bias to eliminate dirty background (see the Process Control - ADS Correction section for details).

The sampling length of the ADS sensor output for the original differs depending on the reproduction ratio because the scanner speed is different.

Sampling is performed on each copy. (If more than one copy is made of the same original, sampling is only done for the first copy run.)

Note: There is an optional extra ADS sensor for users who have copy quality problems with certain types of red original.

5. ERASE

5.1 OVERVIEW

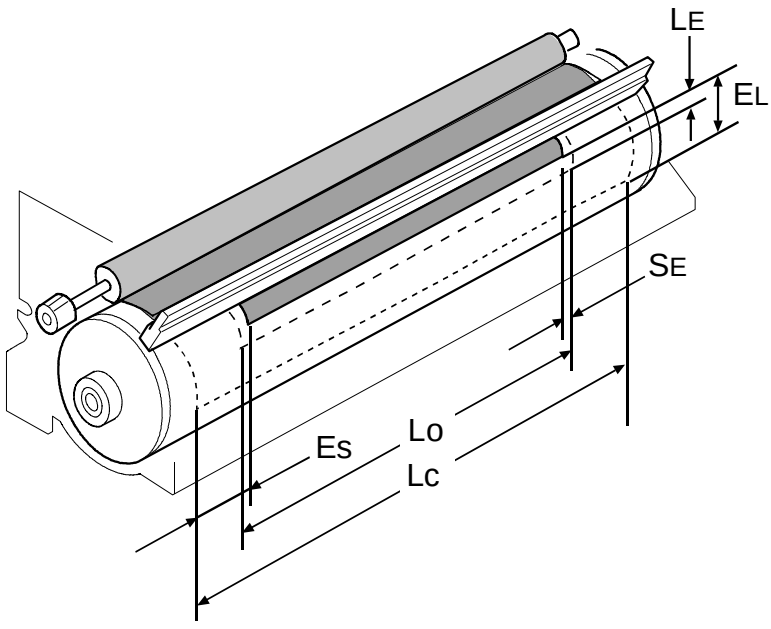

LE: Leading edge erase margin: 3.5 ± 2.5 mm
SE: Side erase margin: total of both sides is 3 mm or less
Lo: Original width
Lc: Charged width of the drum
EL: Leading edge erase
Es: Side erase

The erase lamp unit consists of a row of 54 LEDs extending across the full width of the drum. In erase mode (center erase or side erase), the appropriate LEDs turn on in accordance with the modes selected by the user.

5.2 LEADING EDGE AND TRAILING EDGE ERASE

The entire row of LEDs turns on when the main motor turns on. They stay on until the erase margin slightly overlaps the leading edge of the original image on the drum (leading edge erase margin). This prevents the shadow of the original's leading edge from appearing on the copy paper. This leading edge erase margin is also necessary for the leading edge of the copy paper to separate from the hot roller.

When the scanner reaches the return position, the drum charge roller and the exposure lamp turn off. However, the charged length on the drum surface is a little longer than the actual original length to make sure that there is a complete image of the original.

The entire row of LEDs turn on when the trailing edge of the latent image has passed under the erase lamp unit. This prevents developing unnecessary parts of the drum surface, reducing toner consumption and the drum cleaning load.

The LEDs stay on to erase the leading edge of the latent image in the next copy cycle. After the final copy, the erase lamps turn off at the same time as the main motor.

The leading and trailing edge margins can be adjusted with SP2-101-001 and SP2-101-002 respectively.

5.3 SIDE ERASE

Based on the combination of copy paper size and the reproduction ratio, the LEDs turn on in blocks. This prevents the shadow of the original side edge and the unexposed front and rear sides of the drum surface in reduction mode from being developed. This reduces toner consumption and the drum cleaning load.

6. DEVELOPMENT

6.1 OVERVIEW

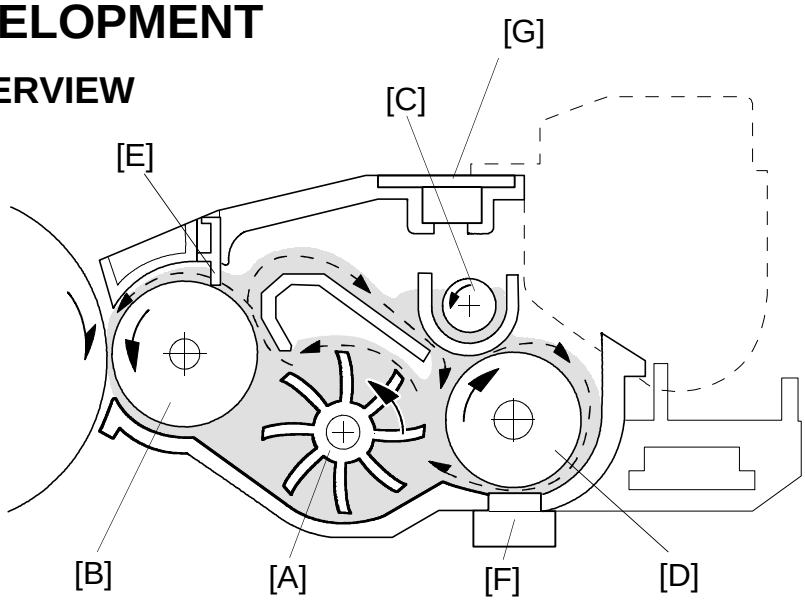

When main motor rotation is transmitted to the development unit, the paddle roller [A], development roller [B], auger [C], and agitator [D] start turning. The paddle roller picks up developer in its paddles and transports it to the development roller. Internal permanent magnets in the development roller attract the developer (which is about 70 μm in diameter) to the development roller sleeve.

The turning sleeve of the development roller then carries the developer past the doctor blade [E]. The doctor blade trims the developer to the desired thickness and creates developer backspill into the cross-mixing mechanism.

The development roller continues to turn, carrying the developer to the OPC drum. When the developer brush contacts the drum surface, the negatively charged areas of the drum surface attract and hold the positively charged toner. In this way, the latent image is developed.

Negative bias is applied to the development roller to prevent toner from being attracted to the non-image areas on the drum, which may have a residual negative charge. The bias also controls image density.

After turning about 100 degrees more, the development roller releases the developer into the development unit. The developer is agitated by the paddle roller, agitator, and cross-mixing mechanism.

The toner density sensor [F] located under the unit measures the toner concentration in the developer. A hole, fitted with a filter [G], has been made in the top of the unit to relieve air pressure and to minimize toner scattering.

6.2 DRIVE MECHANISM

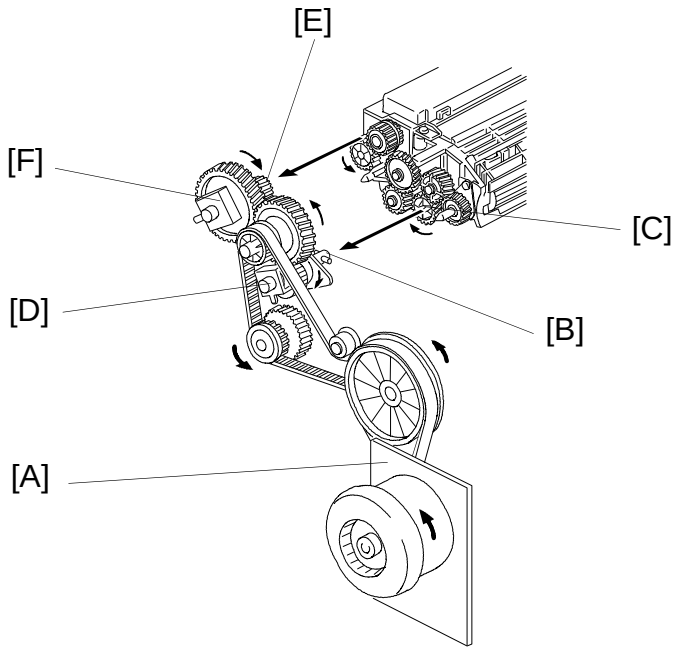

When the main motor [A] turns, the rotation is transmitted from the development drive shaft [B] to the paddle roller gear [C] through the development clutch [D].

The gears of the toner supply unit are driven by the toner supply roller drive gear [E] when the toner supply clutch [F] activates.

All gears on the development unit are helical gears. These gears are quieter than normal gears. The development drive shaft engages the development roller gear when the development unit is pushed in.

6.3 CROSS-MIXING

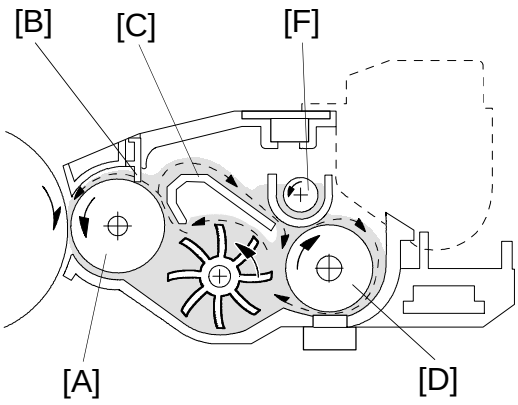

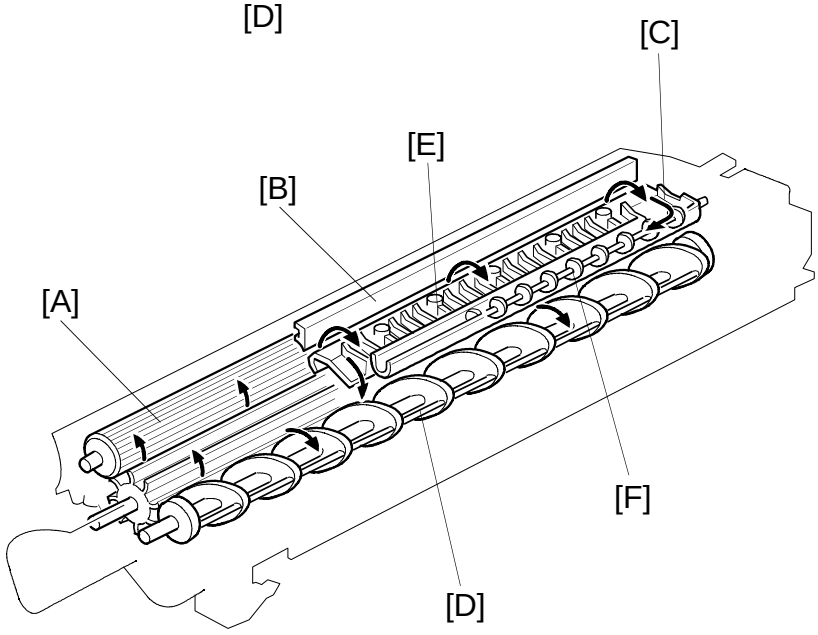

This copier uses a standard cross-mixing mechanism to keep the toner and developer evenly mixed. The developer on the turning development roller [A] is split into two parts by the doctor blade [B]. The part that stays on the development roller forms the magnetic brush and develops the latent image on the drum. The part that is trimmed off by the doctor blade goes to the backspill plate [C].

As the developer slides down the backspill plate to the agitator [D], the mixing vanes [E] move it slightly toward the rear of the unit. Part of the developer falls into the auger inlet and is transported to the front of the unit by the auger [F]. As a result of this mechanism, the developer stays level in the development unit.

6.4 TONER DENSITY SENSOR

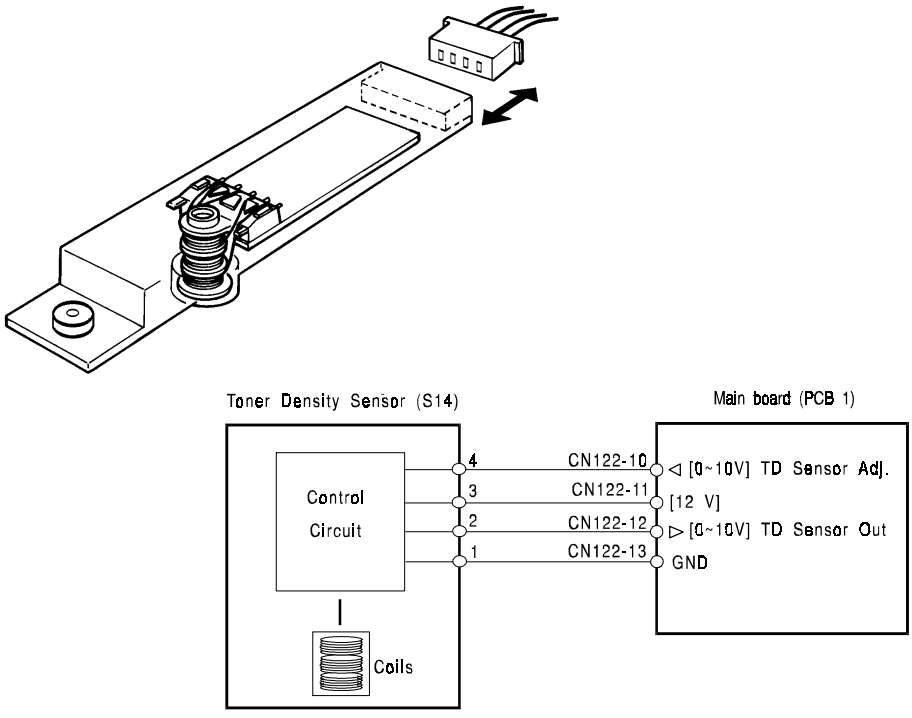

A toner density sensor (the TD sensor) is installed under the development unit. It works in conjuction with the ID sensor to control the amount of toner in the developer mixture.

The toner density sensor has two basic functions. First, it controls the toner supply when the toner density is greater than the upper limit or less than the lower limit. The ID sensor input is ignored. If the amount of toner in the developer is greater than the upper limit (in this case, if the toner density sensor output, Vt, is less than 1.5V), toner supply is prohibited. Second, it takes over toner supply control completely when TD sensor supply mode is selected with SP2-208-001.

The toner density sensor receives 12 volts from CN122-11 of the main board. The sensor's sensitivity is set by the control signal applied at CN122-10. The input signal from the sensor comes in at CN122-12. This is an analog signal. When the toner density is within the standard range, the analog signal is within the range given below. In this model, the ID sensor has more priority over toner supply control than the TD sensor, so the TD sensor does not have to be controlled so precisely. As a result, the standard range is wider than in previous models.

Standard Range: $1.5V \leq Vt \leq$ [Initial Setting $(2.5 \pm 0.1) + 1.0$] V

6.5 DEVELOPMENT BIAS CONTROL

The actual development bias voltage applied depends on various process control corrections that are added to the base voltage. These are explained in Process Control section (see the Summary section for a quick-look reference).

In addition, the technician can adjust the base development bias voltage using SP mode 2-201-001 as shown below.

Darker ⟷ Lighter

SP2-201-1 Setting	1	2	3	4	*5	6	7	8	9
Development Bias Correction Voltage	+80 V	+60 V	+40 V	+20 V	±0 V	–20 V	–40 V	–60 V	–80 V

*: Factory setting

This adjustment should be done only if exposure lamp voltage adjustment (SP4-001) fails to achieve the desired image density.

The correction selected here does not affect toner supply control or pattern detection, as it is not applied when developing sensor patterns on the drum, and the bias control system is different (see Process Control for full details).

6.6 TONER SUPPLY

6.6.1 Toner Bottle Replenishment Mechanism

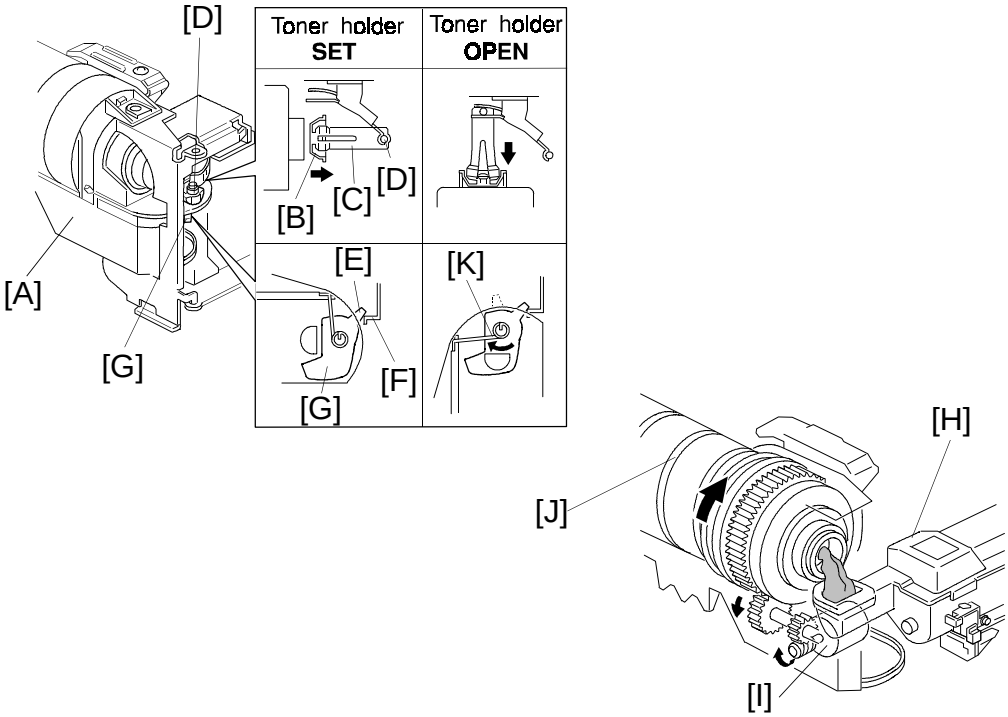

When a toner cartridge is placed on the holder unit [A] and pushed back in completely, the following procedures are automatically performed to supply toner to the toner supply unit.

- The cap [B] remaining on the toner bottle is pulled away and kept by the chuck [C] away from the movement of the roller [D], which rides along the curved rail.
- The toner shutter lever [E] meets the bracket [F] on the copier frame and the toner shutter [G], which covers the hole above the toner supply unit opening, is opened.

The bottle drive mechanism transports toner from the bottle to the toner supply unit [H]. A worm gear on the bottle drive motor [I] drives this mechanism. The toner bottle has a spiral groove [J] that helps move toner to the toner supply unit.

When the holder unit is pulled out to add new toner, the following procedures are performed automatically to prevent toner from scattering.

- The chuck releases the toner bottle cap into its proper position.
- The toner shutter shuts the opening as a result of the pressure of the torsion spring [K].

6.6.2 Toner Supply Mechanism

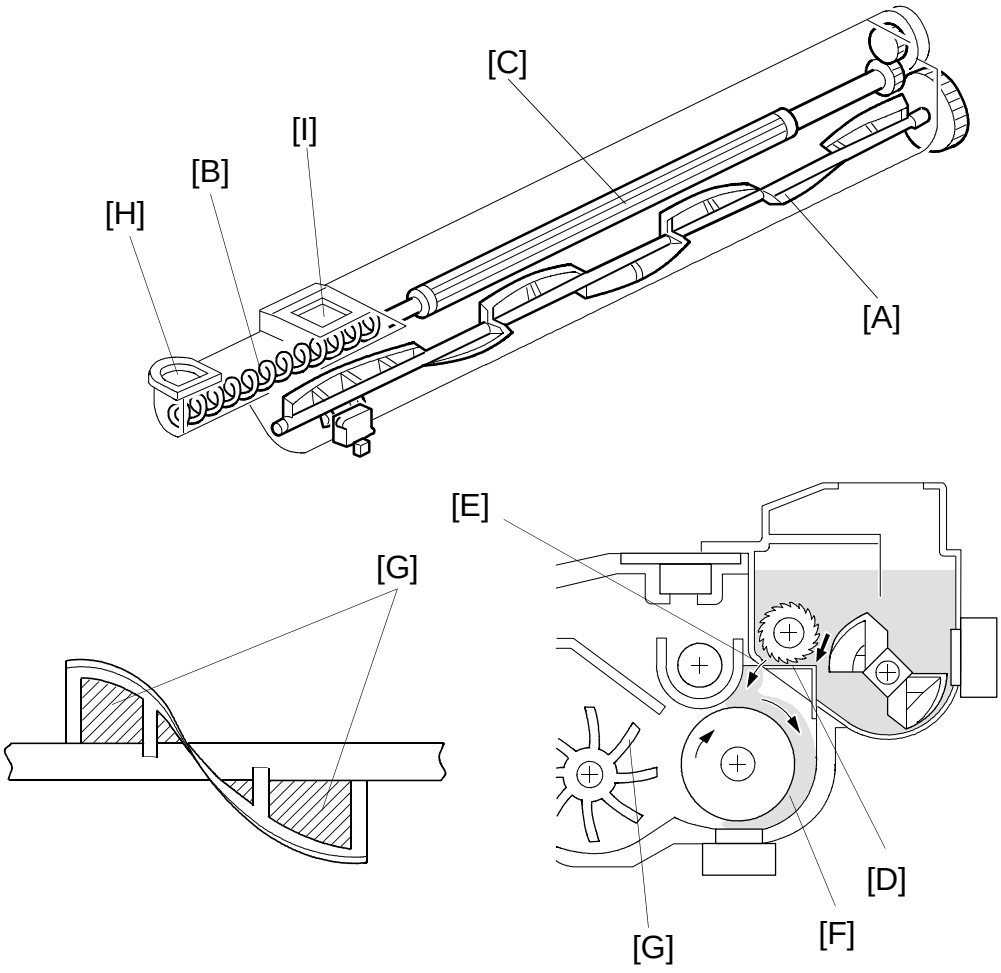

Inside the toner supply unit there are the agitator [A], transport screw [B] and toner supply roller [C]. As the grooves [D] in the toner supply roller turn past the slit [E], toner falls into the development unit [F]. The slit is made up of 21 openings each 0.6 mm in diameter. The agitator has openings [G] inside its fins to achieve a higher degree of mixing.

Two openings can be found in this toner supply unit to supply toner. One [H] is for **new** toner from the toner bottle, and the other [I] is for used toner from the toner recycling system.

The toner supply clutch transfers rotation from the main motor to the agitator gear, which drives the toner supply roller. Both toners are mixed together and transported from the front to the rear; under ideal conditions, the proportions of the two types of toner will be about 80% new toner to 20% recycled toner.

For more details on toner recycling, see the Toner Recycling section.

For more details on toner supply control, see the Process Control Section.

6.6.3 Toner End Detection

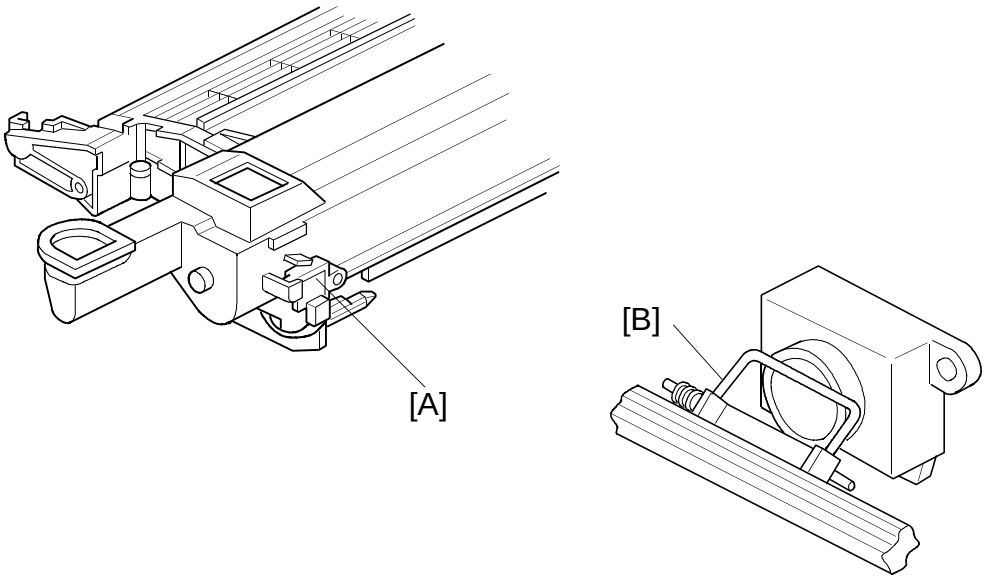

The toner end sensor (which is a piezoelectric sensor) [A] detects whether there is sufficient toner in the toner supply unit or not.

When there is not much toner inside the toner supply unit, the pressure of toner on the toner end sensor becomes low and the sensor outputs a low signal (0V); this is the low toner condition. When this condition is detected five times, the toner bottle is turned for 2 seconds to add toner.

While the toner bottle is being turned to add toner, the CPU counts the total toner supply clutch on time since the low toner condition was first detected. If the toner end sensor is still outputting a low signal when the total clutch on time reaches one minute, the Add Toner indicator starts blinking, and the machine enters the toner near-end condition.

Fifty copies are allowed after entering the toner near-end condition. After this, the machine enters the toner end condition and copying is disabled.

When the main switch is turned off and on, or the front door is opened and closed, the machine drives the toner supply mechanism and monitors the toner end sensor output. (The toner supply mechanism will be driven for a maximum of 10 seconds.) If the toner end sensor outputs a high signal (5V), the toner end condition is canceled.

The toner end sensor surface is cleaned by the movement of the spring [B] attached to the agitator shaft.

7. IMAGE TRANSFER AND PAPER SEPARATION

7.1 PRE-TRANSFER LAMP

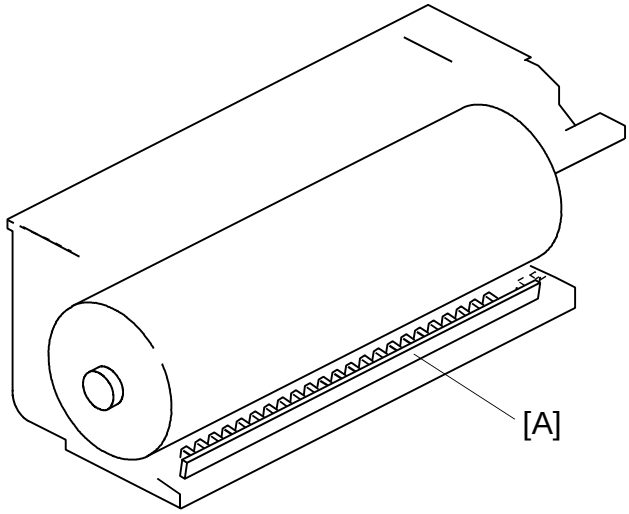

The pre-transfer lamp [A] prevents incomplete toner transfer. This lamp consists of a line of 40 LEDs.

After the latent image is developed but before the image is transferred to the copy paper, the drum surface is illuminated by the pre-transfer lamp. This illumination further reduces the negative potential on the drum surface after it has been partially discharged by exposure. This makes image transfer easier.

The pre-transfer lamp turns on and off at the same time as the main motor.

7.2 IMAGE TRANSFER AND PAPER SEPARATION

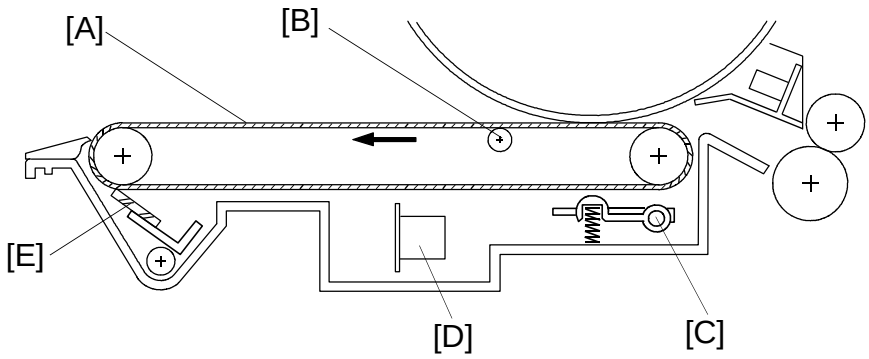

This model uses a transfer belt unit instead of a transfer and separation corona unit. The transfer belt unit consists of the following parts:

[A] Transfer belt
A belt (length: 334 mm for A153, A155, and A156 copiers; 244.5 mm for A157, A159, and A160 copiers) with high electrical resistance which holds a high negative electrical potential and attracts the toner from the OPC drum onto the paper. Also the electrical potential attracts the paper itself and helps to separate the paper from the OPC drum.

[B] Transfer bias roller
Applies transfer voltage to the transfer belt.

[C] Transfer belt lift lever (driven by a one-third turn clutch)
Lifts the transfer belt into contact with the OPC drum.

[D] Transfer high voltage supply board
Generates a constant transfer current.

[E] Transfer belt cleaning blade
Removes toner from the transfer belt to prevent the back side of the paper from being stained.

7.3 IMAGE TRANSFER AND PAPER SEPARATION MECHANISM

(1) The registration rollers [A] start feeding the paper [B] to the gap between the OPC drum [C] and the transfer belt [D] at the proper time. The transfer belt does not contact the OPC drum at this moment (the on-off lever [E] pushes down the transfer belt lift lever [F]).

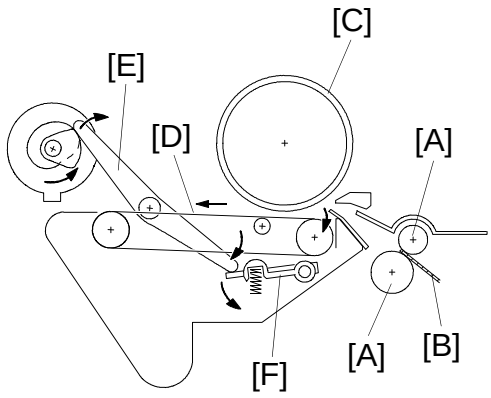

(2) Before the leading edge of the paper reaches the gap between the transfer belt and the OPC drum, the transfer belt contact clutch [G] rotates one third of a complete rotation to release the on-off lever. Then, the transfer belt lift lever pushes up the transfer belt as a result of spring pressure. The contact width [H] is about 4 ~ 5 mm.

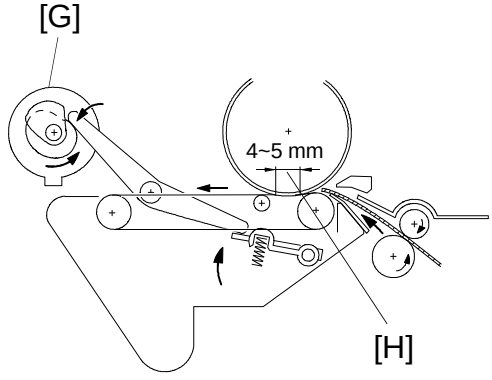

(3) Then a negative potential of –1.0 ~ –6.5 kilovolts is applied to the transfer bias roller [I]. The negative charge attracts the positively charged toner [J] from the OPC drum. It also attracts the paper and separates the paper from the OPC drum.

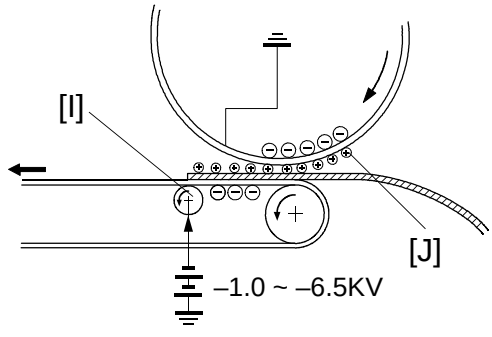

(4) After the image transfer is completed, the charge on the transfer belt holds the paper on the transfer belt. Excess charge on the paper and the transfer belt is discharged during rotation via the grounded idle roller [K].

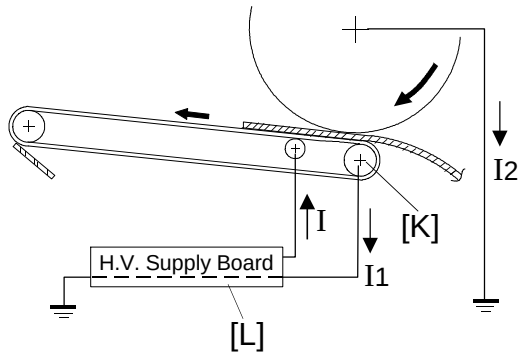

$I_2 = I - I_1$ = constant

When the transfer high voltage supply board [L] inside the transfer belt unit provides high voltage to the transfer bias roller, a small current (I_2) flows to ground via the transfer belt, the paper, and the OPC drum. It is important that this current stays constant even if the paper, environmental conditions, or the transfer belt surface resistance change. The positive feedback of I_1 to the power supply board causes the voltage to increase and decrease with I_1 so that (I_2) remains constant. (The relationship is $I_2 = I - I_1$.)

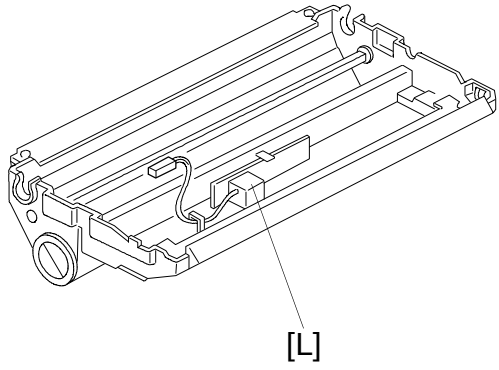

7.4 TRANSFER BELT UNIT LIFT MECHANISM

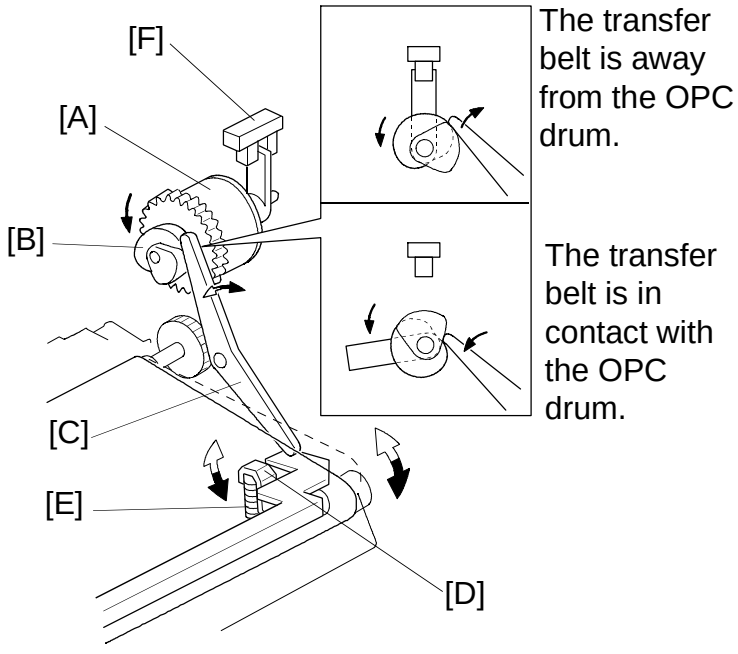

The transfer belt contact clutch [A] (a one-third turn clutch) located on the back of the copier turns on and the cam [B] rotates one third of a complete rotation. The on-off lever [C], riding on the cam, rotates counterclockwise to release the transfer lift lever [D]. Then, the springs [E] push up the transfer belt lift lever and the transfer belt to make the transfer belt contact the OPC drum.

The transfer belt contact home position sensor [F] is used to detect the home position of the cam (this is when the transfer belt is away from the OPC drum). The transfer belt must be released from the OPC drum while it is not being used for image transfer. The reasons are as follows:

- To prevent V_{SP}, V_L, and V_R patterns on the OPC drum from being rubbed off by the transfer belt, because the transfer belt is located between the development unit and the ID sensor.
- To prevent a change in the OPC drum characteristics because of the influence of additives inside the rubber belt.

7.5 PAPER TRANSPORTATION AND BELT DRIVE MECHANISM

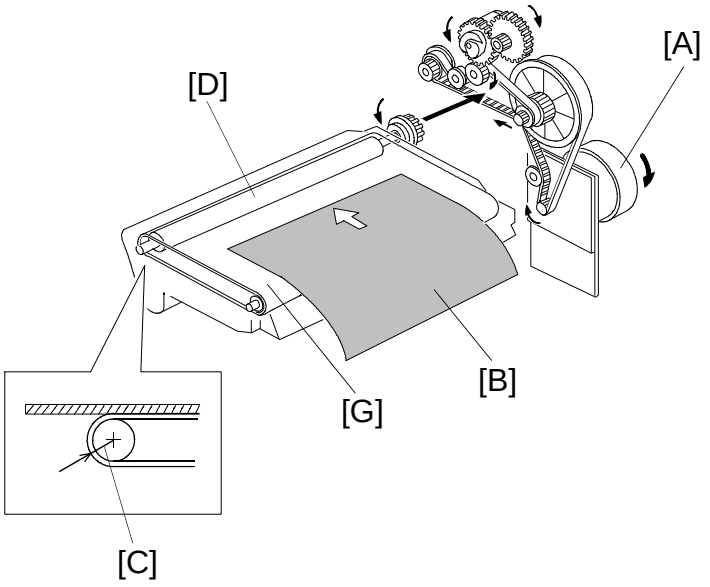

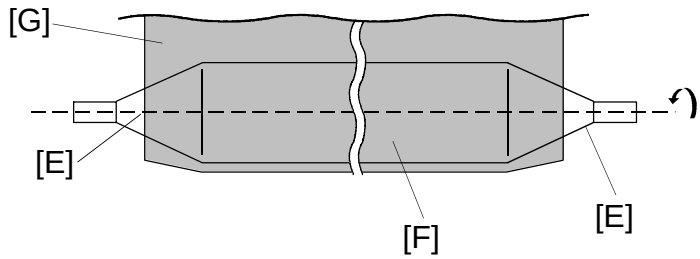

The main motor [A] drives the transfer belt through some timing belts and gears. Since the transfer belt electrically attracts the paper [B], a transport fan is not required.

As a result of its own stiffness and the curvature [C] of the belt, the paper separates from the transfer belt above the transfer belt drive roller [D] as the belt turns sharply around the transfer belt drive roller.

The tapered parts [E] at both sides of the drive roller [F] help keep the transfer belt [G] at the center position.

7.6 TRANSFER BELT CLEANING MECHANISM

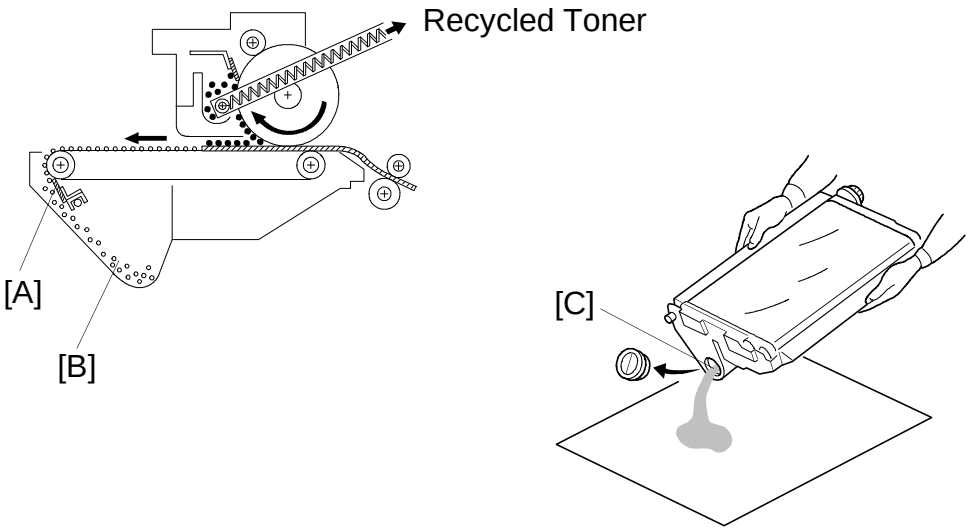

Some toner may adhere to the transfer belt under the following conditions:

- When a paper jam occurs.
- When the by-pass feed table side fences are set wider than the actual paper width. In this condition, the erase lamp does not erase the area of the drum outside the width of the copy paper. The image developed on this area will not be transferred to the copy paper but to the transfer belt.
- When the platen cover or ADF is opened during the first copy when using by-pass feed. In this condition, the scanner scans full size and a full black image is developed outside the length of the copy paper. The developed image on this area will not be transferred to the copy paper but to the transfer belt instead.

The adhering toner must be removed to prevent the back side of later copies from being stained. The cleaning blade [A], which is always in contact with the transfer belt, scrapes off any toner remaining on the transfer belt. Paper dust on the transfer belt is also scraped off, and is disposed of with the waste toner from the transfer belt. A counter blade system is used to clean the transfer belt. The surface of the transfer belt is coated to make it smooth and to prevent the cleaning blade from being flipped by the transfer belt.

The toner that is scraped off falls into the toner collection tank [B]. Collected toner must be discarded from the opening [C] at each preventive maintenance call. This toner must not be recycled, because it contains paper dust.

During the following modes, the transfer belt unit is away from the drum while the transfer belt is rotated.

- 1,000 copies process control
- Stacking paper in the duplex unit
- Drum charge roller cleaning
- Fusing idling
- Toner end recovery

The transfer belt cleaning blade scrapes off any toner remaining on the transfer belt, but some toner will be stuck in very small cracks in the transfer belt (these small cracks are a normal characteristic of the transfer belt).

If there is some negative toner in these cracks, there may be some side effects, such as the back sides of copies getting dirty. This is because the negative transfer voltage repels the negatively-charged toner, and this toner becomes attracted to the back of the copy paper.

After any of the above-stated five modes, to prevent these side effects, the transfer belt comes into contact with the drum and rotates for 2 seconds while applying the transfer bias voltage (–1.0 ~ –6.5 kV). As a result of this negative charge, the negatively-charged toner is repelled and is attracted to the drum. This toner is then scraped off by the drum cleaning blade.

7.7 TRANSFER BELT UNIT RELEASE MECHANISM

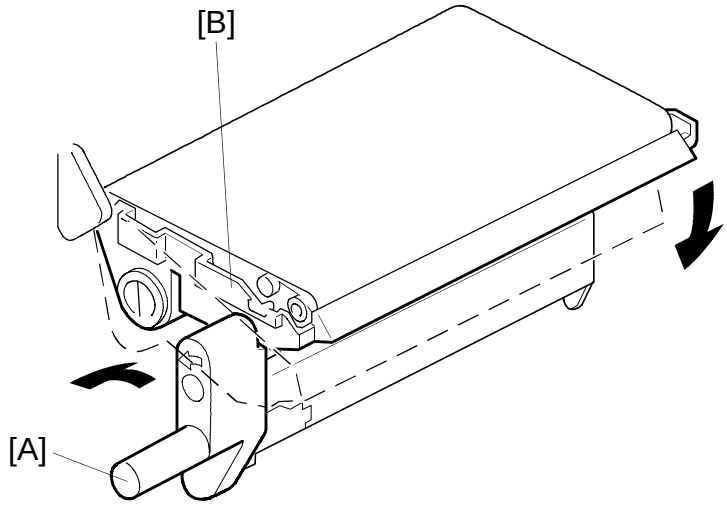

When the transfer belt unit release lever "A1" [A] is rotated counterclockwise, the transfer belt unit [B] is released, allowing it to rotate down clockwise. This mechanism allows easy paper jam recovery and easy maintenance of the transfer belt unit.

8. DRUM CLEANING

8.1 OVERVIEW

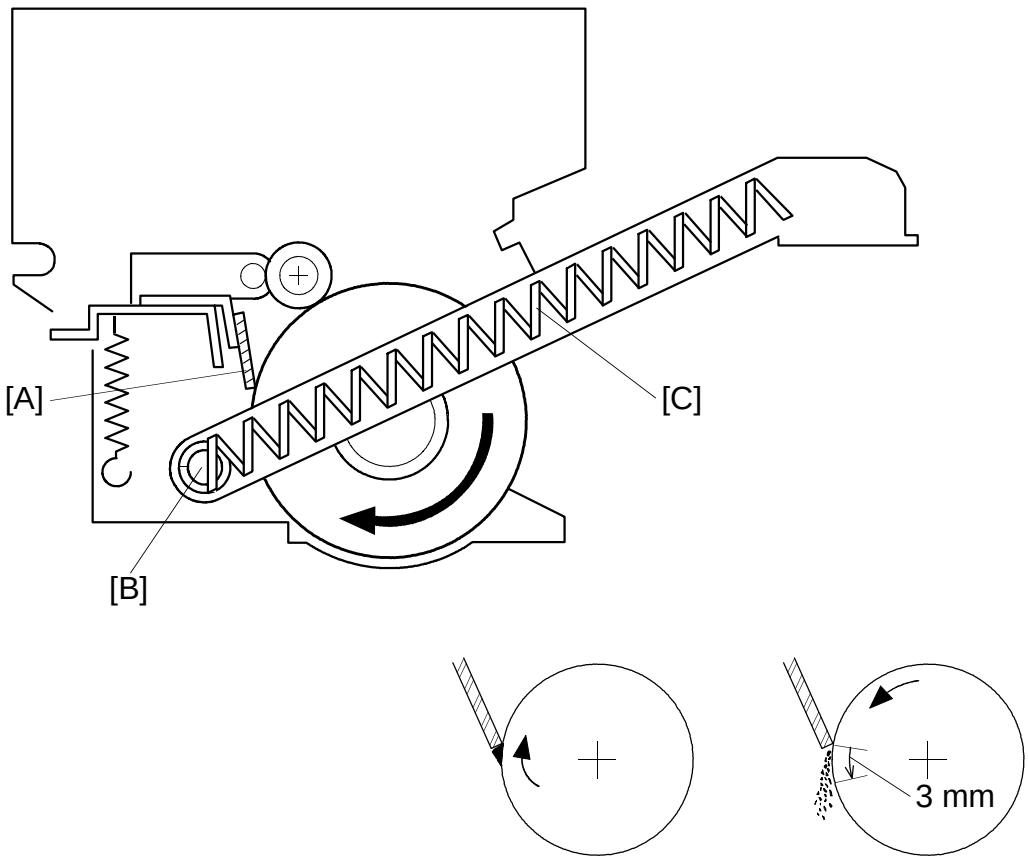

This copier uses a counter blade system for drum cleaning. In a counter blade system, the blade [A] is angled against drum rotation. This system has the advantage of high cleaning efficiency.

The toner remaining on the drum is scraped off by the cleaning blade and it falls onto the toner collection coil [B]. Collected toner is transported to the recycled toner transport coil [C].

To remove the toner that is accumulated at the edge of the cleaning blade, the drum turns in reverse for about 3 mm at the end of every copying job.

8.2 DRIVE MECHANISM

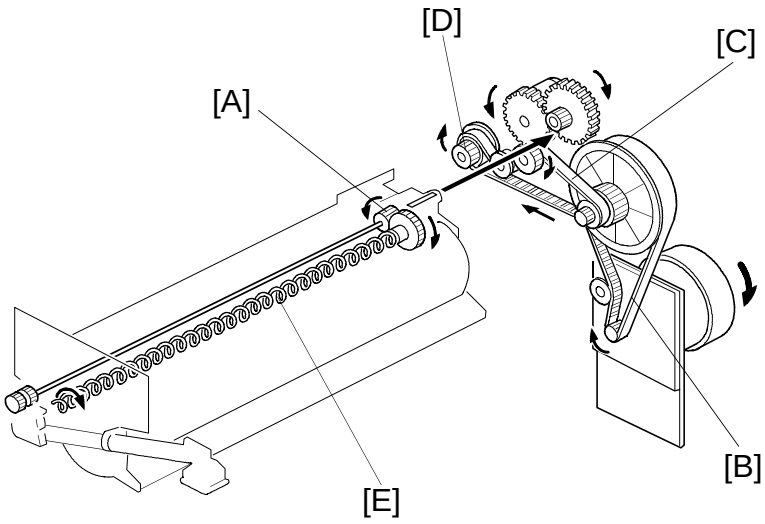

Drive from the main motor is transmitted to the cleaning unit drive gear [A] by the timing belts [B] and [C] and the joint gear [D]. The cleaning unit drive gear [A] then transmits the drive to the toner collection coil [E]. The two gears at the front end of the cleaning unit drive gear shaft are used to move the cleaning blade from side to side and to drive the recycled toner transport coil.

8.3 CLEANING BLADE PRESSURE MECHANISM AND SIDE-TO-SIDE MOVEMENT

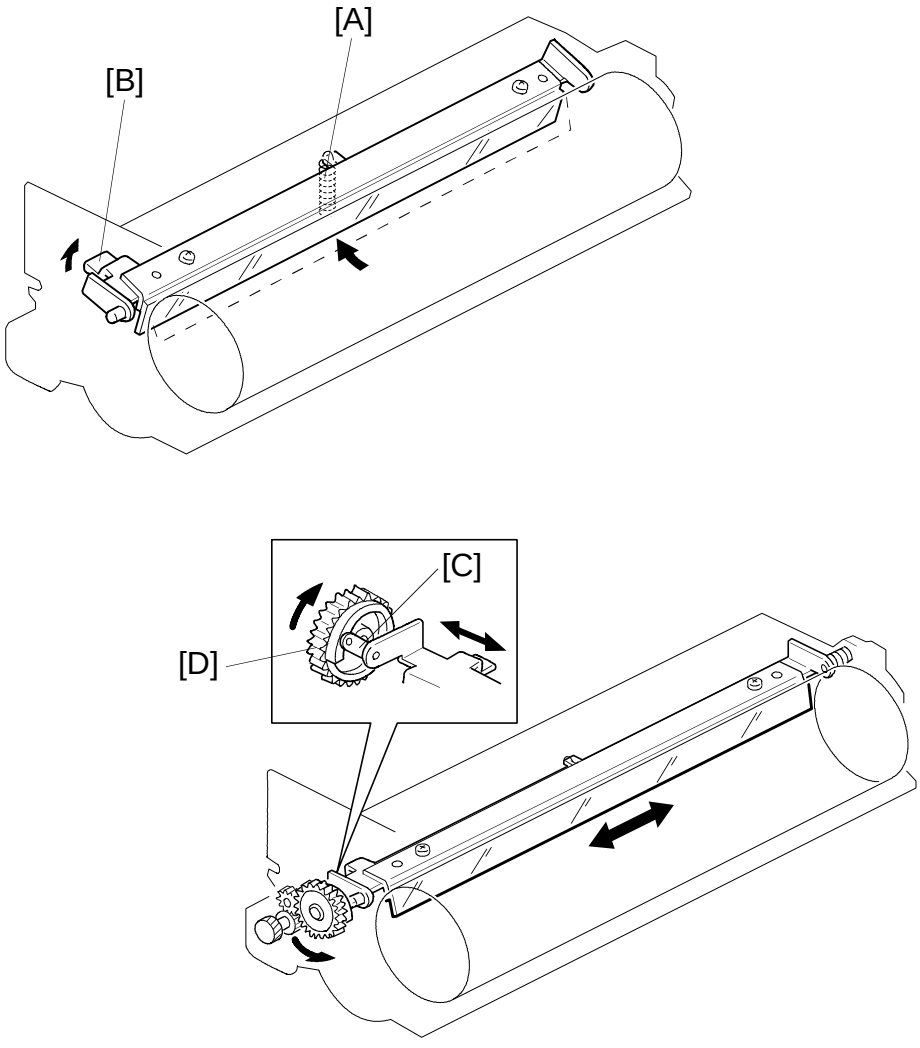

The spring [A] always pushes the cleaning blade against the OPC drum. The cleaning blade pressure can be manually released by pushing up the release lever [B]. To prevent cleaning blade deformation during transportation, the release lever is locked in the pressure release (upper) position.

The pin [C] at the front end of the cleaning blade holder touches the inner rim of the sinusoidal cam gear [D] which gives a side-to-side movement to the blade. This movement helps to disperse accumulated toner to prevent early blade edge deterioration.

8.4 TONER COLLECTION MECHANISM

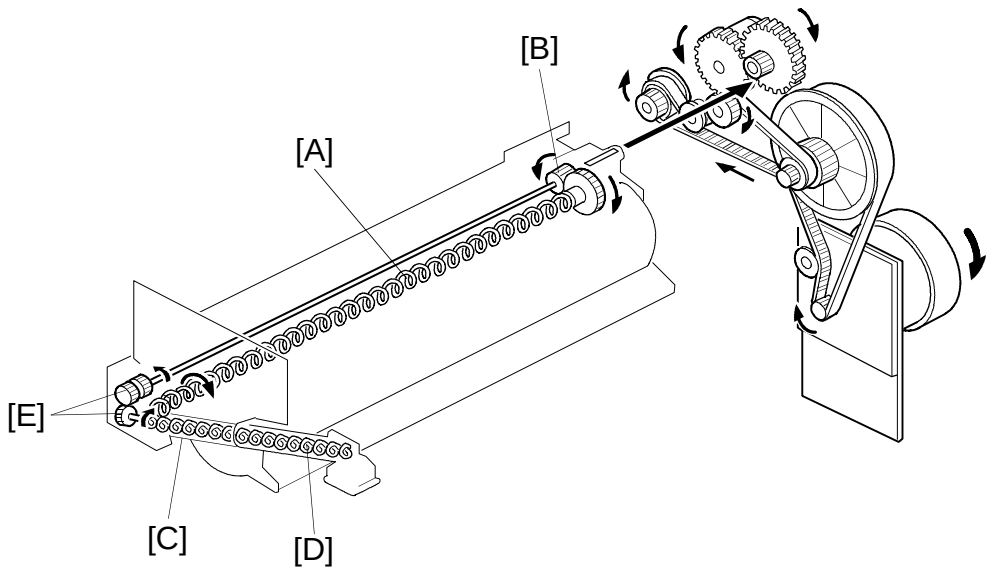

Toner scraped off by the cleaning blade falls onto the toner collection coil [A]. The toner collection coil is driven by the main motor via the cleaning unit drive gear [B].

The toner collection coil transports toner to where it joins the recycled toner transport tube [C] at the front of the drum unit. The recycled toner transport coil [D] is driven by two helical gears [E], one of which is on the front end of the cleaning unit drive gear shaft and the other on the shaft of the recycled toner transport coil. The recycled toner transport coil moves collected toner to the toner supply unit for recycling. (See the "Toner Recycling" section for details.)

9. TONER RECYCLING

9.1 OVERVIEW

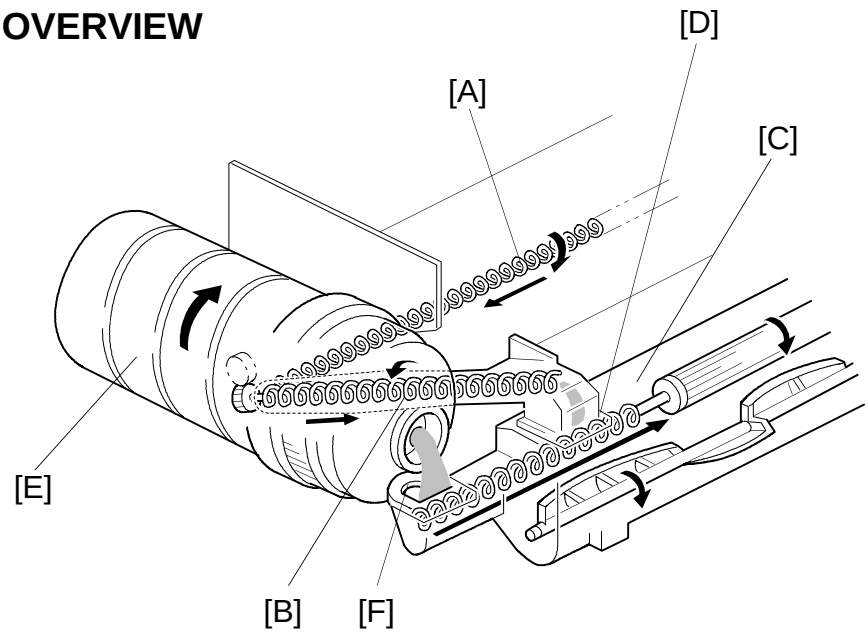

As described in the "Drum Cleaning" section, the toner remaining on the drum which was not transferred to the copy paper is scraped off by the cleaning blade and falls onto the toner collection coil [A].

The toner collection coil carries the toner to the recycled toner transport coil [B]. This helical coil transports the collected recycled toner to the toner supply unit [C] through the opening [D]. In addition, new toner is supplied from the toner bottle [E] into the toner supply unit through the opening [F]. (Refer to the "Toner Bottle Replenishment Mechanism" section.)

9.2 NEW TONER AND RECYCLED TONER MIXTURE

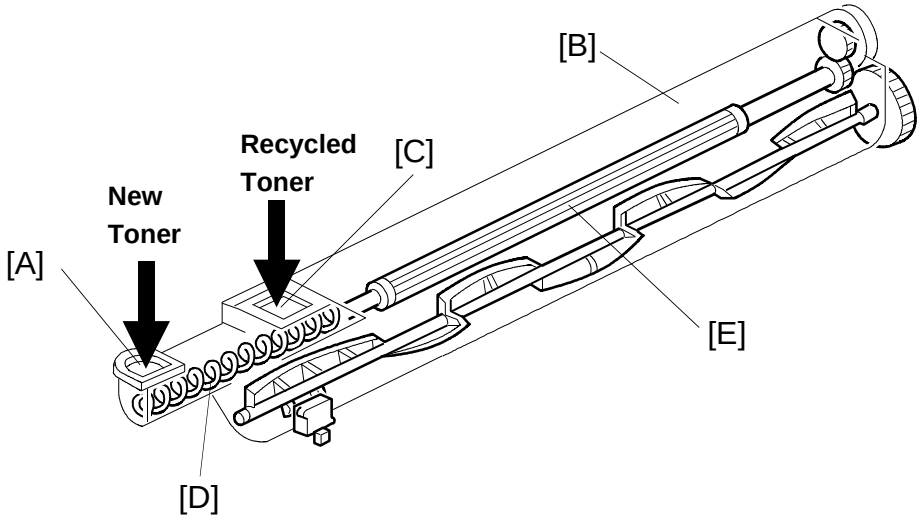

The mixture ratio of new toner and recycled toner affects copy quality.

New toner is supplied from the toner bottle to the opening [A] in the toner supply unit [B] when the toner bottle drive motor rotates.

Recycled toner is transported to the opening [C] when the toner collection coil in the cleaning unit and the recycled toner transport coil in the drum unit are driven by the main motor. However, the new toner and the recycled toner stop at the openings [A] and [C] until the transport coil [D] rotates. So the new and recycled toner are only transported into the toner supply unit when the transport coil is driven through the toner supply roller [E]; this occurs when the toner supply clutch turns on while the main motor is running. Therefore, recycled toner and new toner are supplied together to the interior of the toner supply unit.

The transfer ratio of the toner on the OPC drum to the copy paper is about 80%, regardless of the proportion of black in the image. So 20% of the toner always goes to the recycled toner inlet of the toner supply unit. When the toner end sensor indicates that more toner is needed, the toner supply clutch turns on, and this recycled toner goes into the development unit with new toner (about 80% of the mixture will be new toner).

As toner is supplied to the machine on successive occasions, the proportion of recycled toner in the development unit will approach 20% over time, until the developer is changed and the process starts again with all the toner in the development unit being new toner.

10. QUENCHING

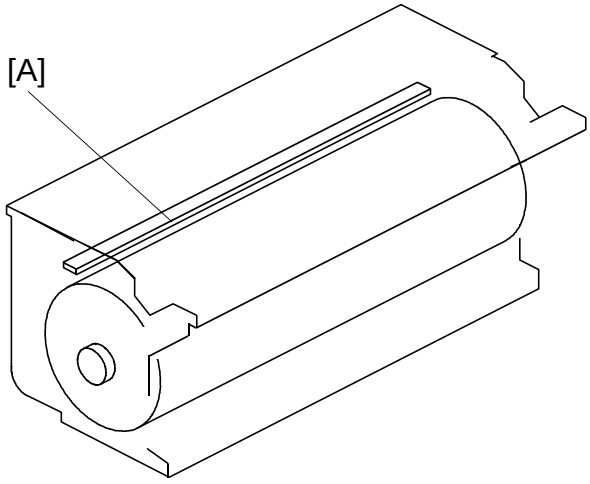

In preparation for the next copy cycle, light from the quenching lamp [A] neutralizes any charge remaining on the drum.

The quenching lamp consists of a line of nine LEDs extending across the full width of the drum.

Red LEDs are used to reduce ultra violet light which would cause light fatigue of the OPC drum.

11. PAPER FEED AND REGISTRATION

11.1 OVERVIEW

– A156 copier –

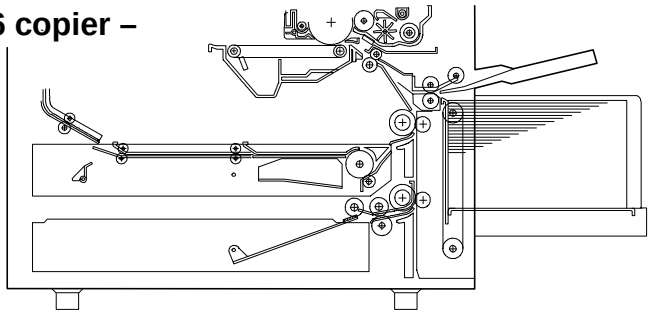

– A160 copier –

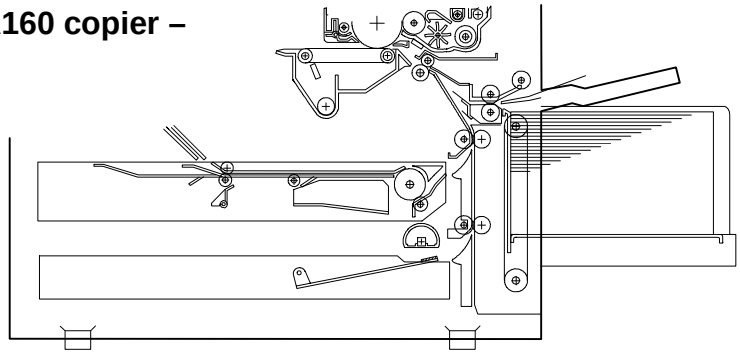

This model has three paper feed stations: the large capacity tray feed station (LCT machines only), the upper paper tray feed station (non-duplex machines only) and the lower paper tray feed station.

The LCT holds 1000 sheets of paper. The upper and lower paper trays are drawer trays that hold either 500 sheets of paper (A153/A155/A156 copiers) or 250 sheets of paper (A157/A159/A160 copiers).

Paper can also be fed using the by-pass feed table, which uses the feed mechanism of the LCT feed station. The by-pass feed table can hold 40 sheets of paper.

There are two types of paper feed system: the FRR feed system and the corner separation system.

- The FRR feed system is used for the A153/A155/A156 copiers, the LCT and the by-pass feed station.
- The corner separation system is used for the A157/A159/A160 copiers.

The top sheet of paper separates from the stack and is fed to the relay rollers, then to the registration rollers.

There are two relay sensors, one located just under each set of relay rollers. These sensors are used for paper jam detection.

11.2 PAPER FEED MECHANISM [A153/A155/A156]

11.2.1 Drive Mechanism

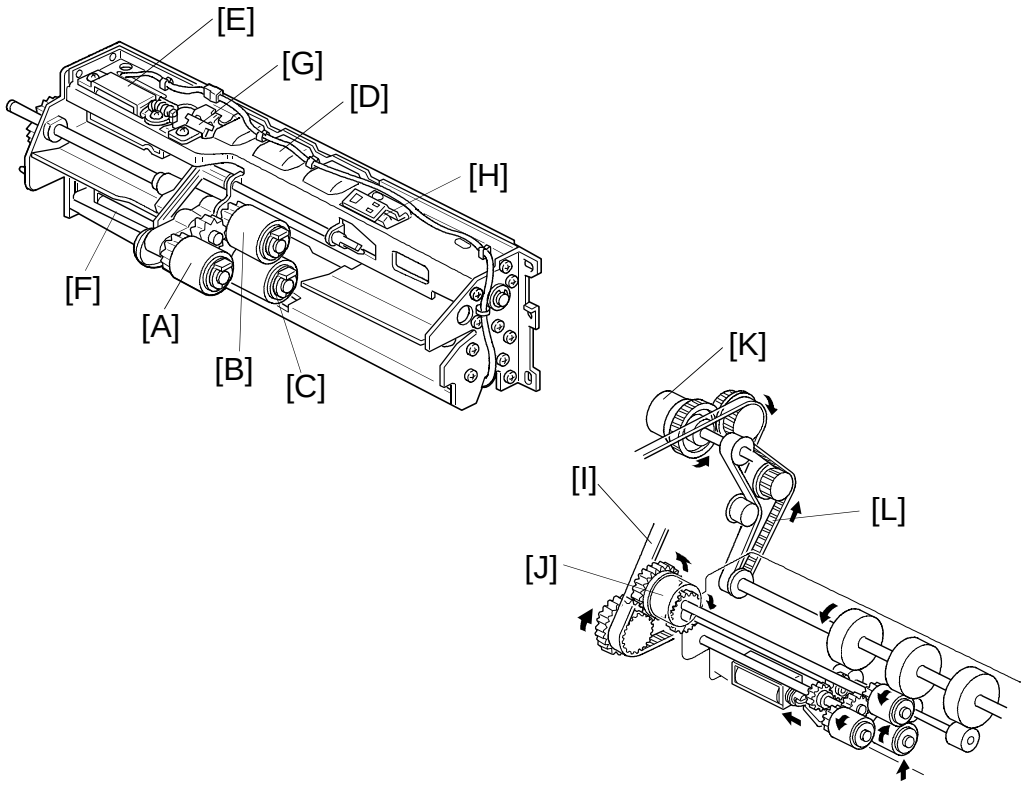

Each paper feed unit consists of a pick-up roller [A], feed roller [B], separation roller [C], relay roller [D], pick-up solenoid [E], separation solenoid [F], paper upper limit sensor [G], and paper end sensor [H].

The pick-up, feed and separation rollers are driven by the main motor via the timing belt [I] and the paper feed clutch [J]. The relay roller is also driven by the main motor. However, drive is transmitted to the relay roller via the relay clutch [K] and the timing belt [L].

In standby mode, the separation roller is away from the feed roller.
At 50 ms after the Start key was pressed, the main motor and the separation roller solenoid of the selected paper feed station turn on. Then the separation roller contacts the feed roller.
At 100 ms after the main motor started to rotate, the pick-up solenoid turns on. The pick-up roller lowers to make contact with the top of the paper stack. The pick-up solenoid stays on for 314 ms.
At 200 ms after the main motor started to rotate, the paper feed clutch and the relay clutch turn on. The feed roller and relay rollers feed the top sheet of the paper stack to the registration rollers. When the leading edge of the paper passes through the upper relay sensor, the paper feed clutch is de-energized.

11.2.2 Slip Clutch Mechanism

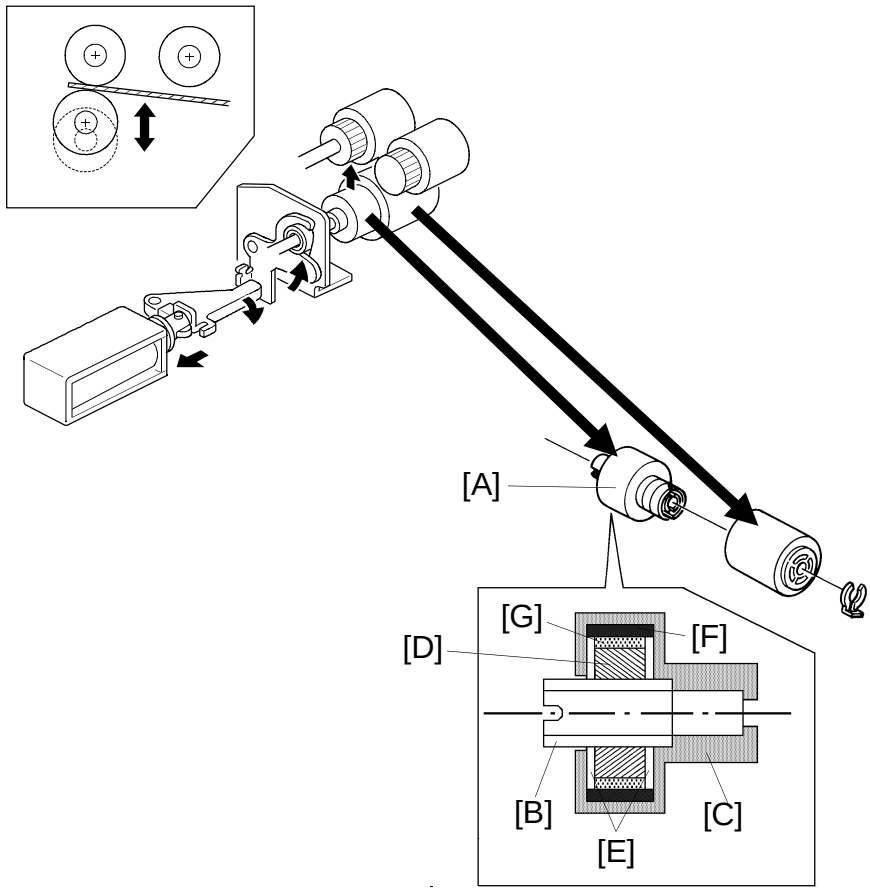

The separation roller is mounted on a slip clutch. The slip clutch [A] consists of an input hub [B] and an output hub [C], which also acts as the case of the clutch. A magnetic ring [D] and the steel spacers [E] are fitted onto the input hub. A ferrite ring [F] is fitted into the output hub. Ferrite powder [G] packed between the magnetic ring and the ferrite ring generates a constant torque due to magnetic force. The input hub and the output hub slip when the rotational force exceeds the constant torque. The constant torque prevents double feeding, because it exceeds the coefficient of friction between sheets of paper.

This type of slip clutch does not require lubrication.

11.2.3 Separation Roller Release Mechanism

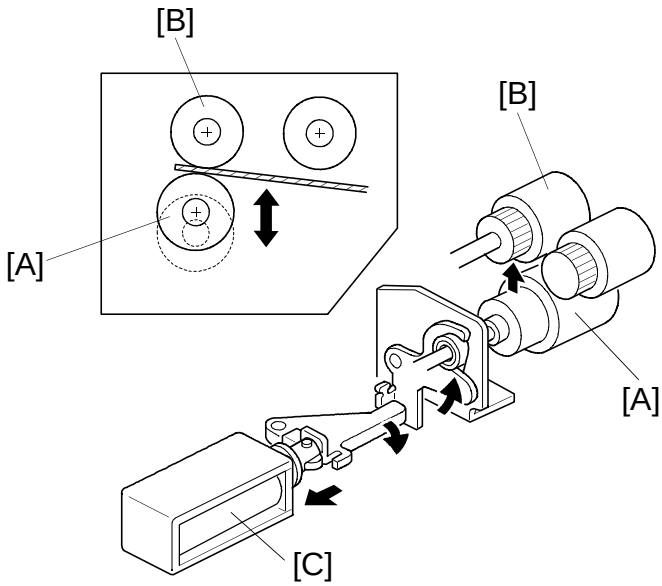

This FRR mechanism uses a separation roller release system. The separation roller [A] is normally away from the feed roller [B]. When the paper feed station has been selected and the Start key is pressed, the separation solenoid [C] moves the separation roller into contact with the feed roller.

This mechanism has the following three advantages:

- If the separation roller is normally away from the feed roller, it reduces the wear on the rubber surface of the separation roller that is caused by friction between the feed roller and the separation roller.
- After paper feeding is completed, a sheet of paper sometimes remains between the feed roller and the separation roller. If the feed tray is drawn out in this condition, it is possible for this sheet of paper to be torn. When the separation roller is away from the feed roller, the remaining sheet of paper is released from between the feed roller and the separation roller.
- When paper misfeeds occur in this area, users can easily pull out paper jammed between the feed roller and the separation roller because the separation roller is away from the feed roller.

11.3 PAPER FEED DRIVE MECHANISM [A157/A159/A160]

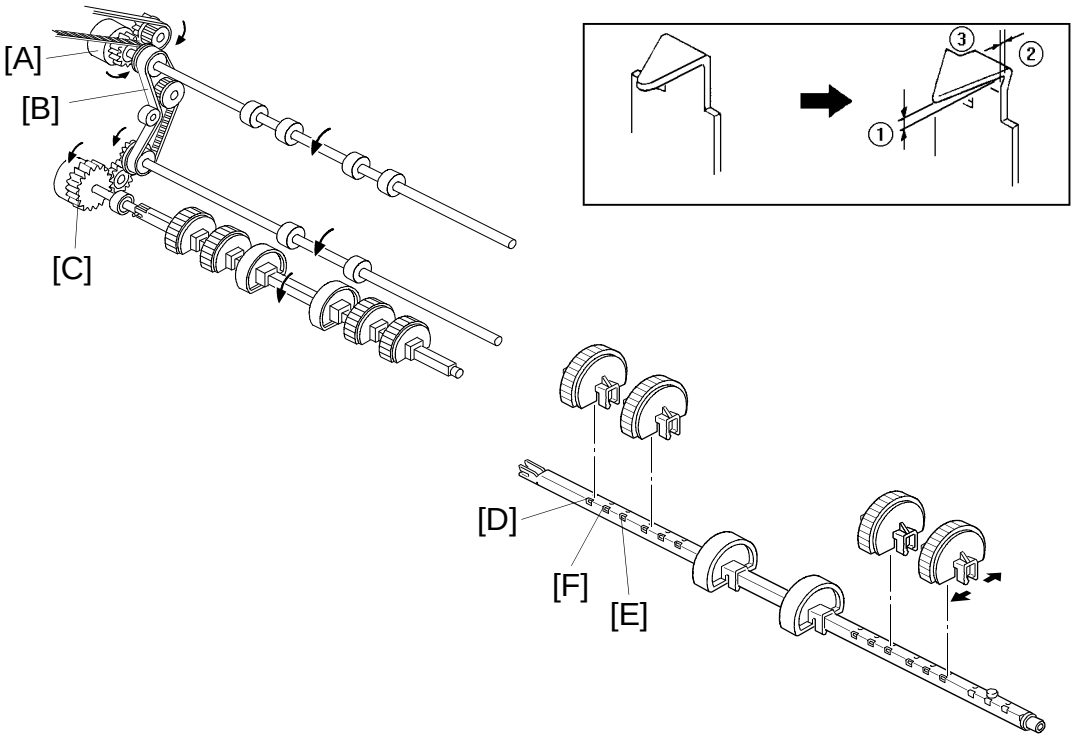

The main motor drives the paper feed rollers through the relay clutch gear [A], the timing belt [B] and the paper feed clutch gear [C].

After the Start key is pressed, the paper feed clutch turns on and the paper feed rollers start rotating to feed the paper. The paper feed clutch stays on for 150 ms to turn the paper feed rollers once only (the paper feed clutch is a one-turn clutch).

This paper feed mechanism uses the corner separation system. The shape of the corner separators has been changed as shown above. These corner separators have the following advantages.

- Dog ear problems were reduced by the changes in angles ① and ② .
- Multiple paper feeding was reduced by the change in shape at ③ .

There are two extra holes for each paper feed roller on the paper feed roller shaft for use when multiple feed or paper jams occur. The factory-set position of the paper feed roller is hole [D], which is most suitable for A4, LT and B size paper. Another [E] is especially suitable for B size paper. The other, [F], is a general position that is used in Japan, where people are as likely to use B size paper as A size. If paper jams or non-feed errors occur for users who mainly use B size paper, change the paper feed roller position to [E]

11.4 PAPER LIFT MECHANISM

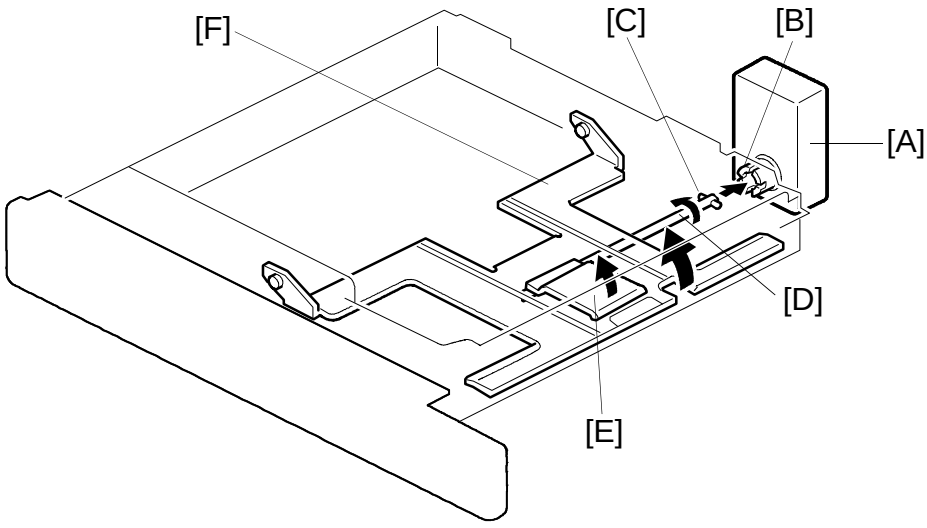

- A153/A155/A156 copiers -

The tray switch detects when the tray is placed in the machine. When the machine detects that the paper tray is in the machine, the tray lift motor [A] rotates and the coupling gear [B] on the tray lift motor engages the pin [C] of the lift arm shaft [D]. Then the tray lift arm [E] lifts the tray bottom plate [F].

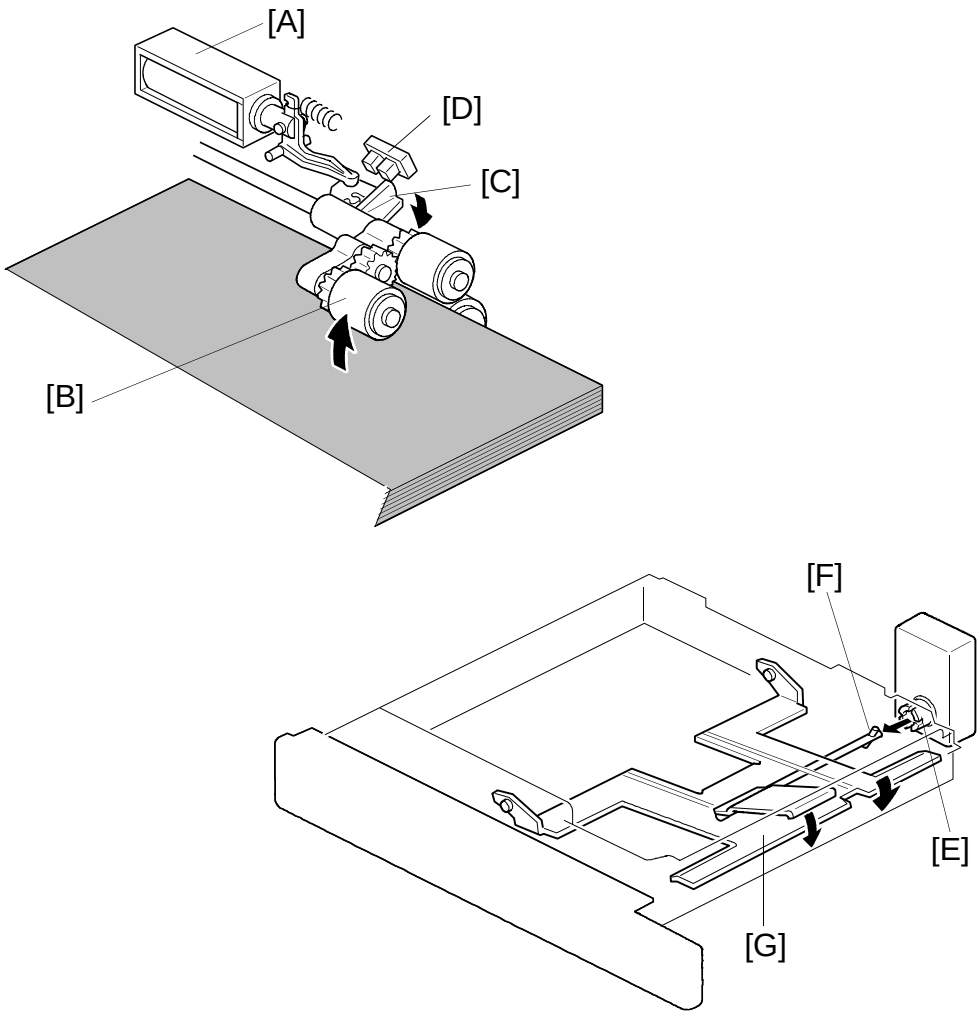

When the tray lift motor turns on, the pick-up solenoid [A] activates to lower the pick-up roller [B]. When the top sheet of paper reaches the proper height for paper feed, the paper pushes up the pick-up roller and the actuator [C] on the pick-up roller supporter activates the paper upper limit sensor [D] to stop the tray lift motor.

After several paper feed cycles, the paper level gradually lowers and the upper limit sensor is de-activated. The tray lift motor turns on again until this sensor is activated again.

When the tray is drawn out of the machine, the tray lift motor coupling gear [E] disengages the pin [F] of the lift arm shaft, and the tray bottom plate [G] then drops under its own weight.

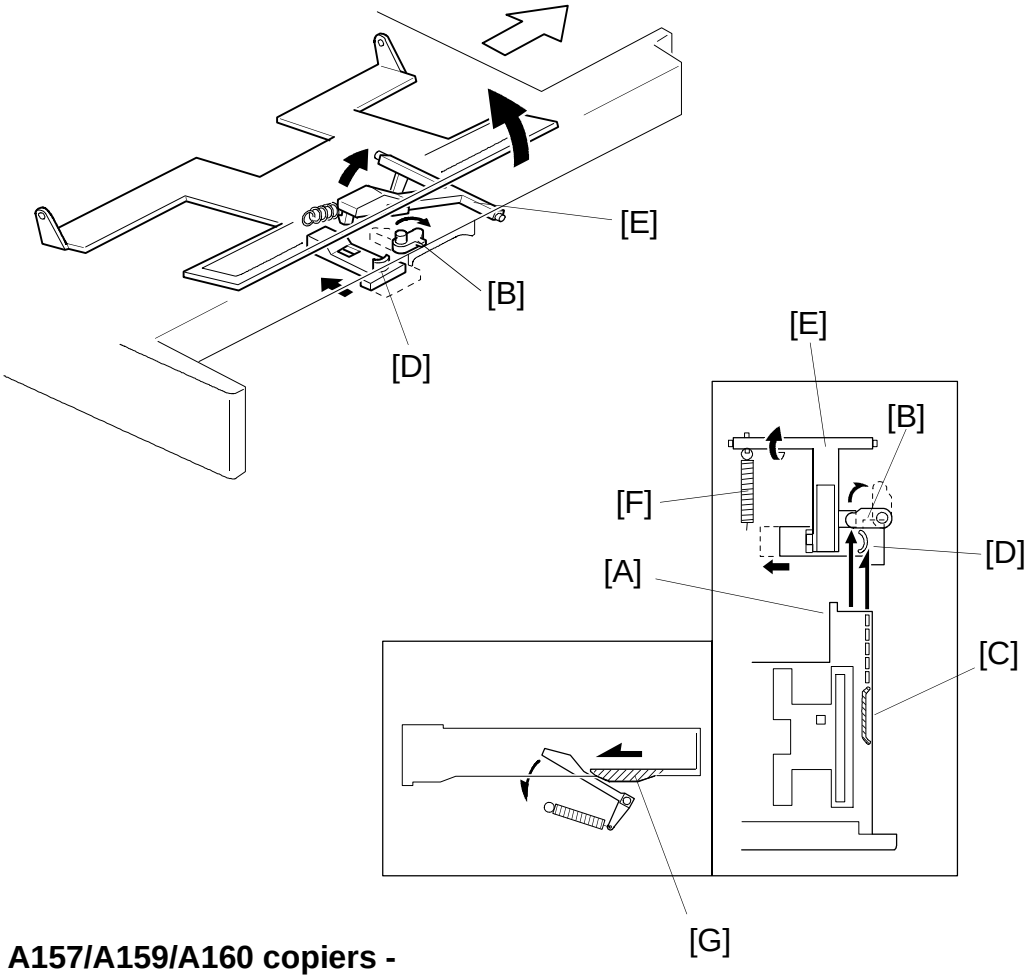

- A157/A159/A160 copiers -

When the paper tray is closed, the projection [A] on the tray pushes the release lever [B], and the other projection [C] pushes the release slider [D]. Then the release slider comes off the bottom plate lift arm [E].

Once the release slider comes off, the spring [F] raises the bottom plate lift arm and the bottom plate is lifted up. Then the top sheet of paper pushes up the corner separators. This keeps the stack of paper at the correct height.

When the tray is pulled out, the bottom part [G] of the tray pushes the bottom plate lift arm into the release slider.

11.5 PAPER END DETECTION

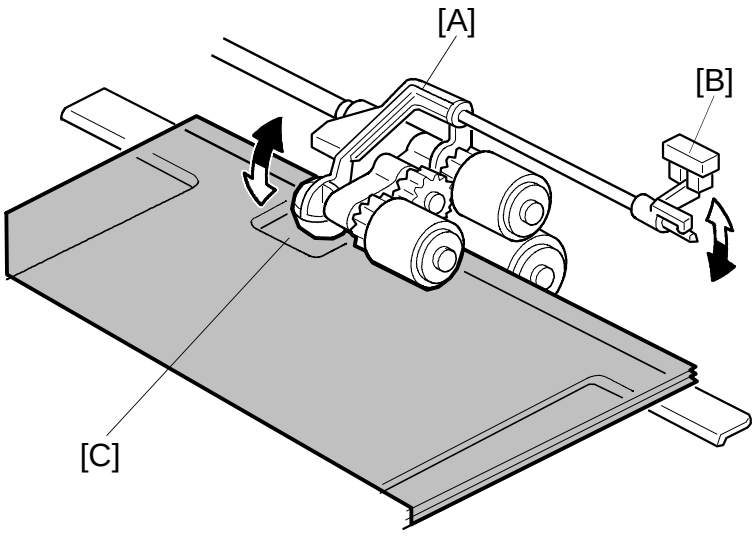

- A153/A155/A156 copiers -

If there is some paper in the paper tray, the paper end feeler [A] is raised by the paper stack and paper end sensor [B] is deactivated.

When the paper tray runs out of paper, the paper end feeler drops into the cutout [C] in the tray bottom plate and the paper end sensor is activated.

When a paper end condition occurs, the tray lift motor lowers the paper bottom plate and the pick-up solenoid turns off.

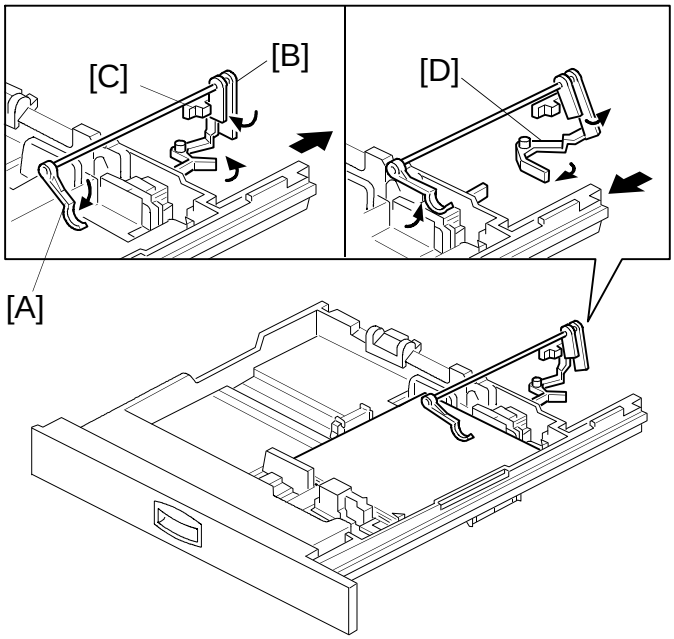

- A157/A159/A160 copiers -

The paper end feeler [A] is on the same shaft as the paper end actuator [B]. When the tray runs out of paper, the paper end feeler drops into the cutout in the tray bottom plate and the paper end actuator activates the paper end sensor [C].

The paper end actuator is in contact with the lever [D]. When the paper tray is drawn out of the copier, the lever turns as shown by the arrow in the diagram, and pushes up the actuator. As a result, the feeler rotates upwards. This mechanism is necessary to prevent the feeler from getting damaged by the paper tray body.

11.6 PAPER SIZE DETECTION

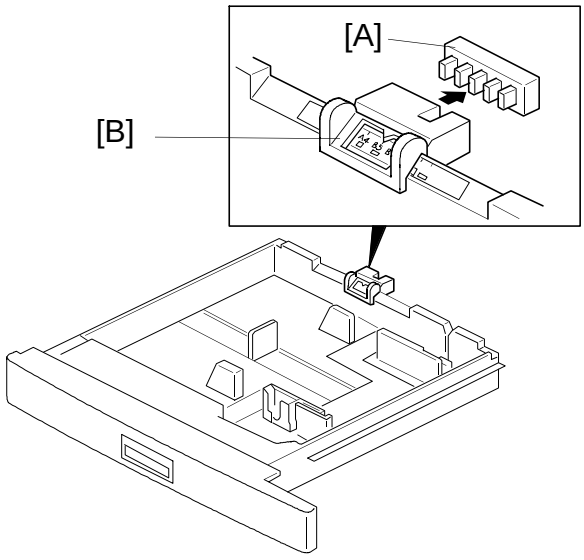

Actuated = 0 Deactuated = 1 1 2 3 4 5	**Paper size**	**L: Lengthwise S: Sideways**
	A4/A3 Version	**LT/DLT Version**
01111	A3-L	11" x 17"
00111	B4-L	8 1/2" x 14"
10011	A4-L	8 1/2" x 11"
01001	A4-S	11" x 8 1/2"
00100	B5-L	A4-L
00010	B5-S	A4-S
00001	A5-S	8 1/2" x 5 1/2"
10000	8 1/2" x 11"	11" x 15"
11000	11" x 8 1/2"	10" x 14"
11100	11" x 17"	8 1/2" x 13"
11110	F4-L	8" x 10"

The paper size switch [A] detects the paper size. The paper size switch has five microswitches inside. The paper size sensor is actuated by an actuator plate [B] located on the rear of the tray. The actuator is slid across to match the paper size. Each paper size has its own unique combination of switch states, as shown in the table. The CPU determines the paper size by the signal combination from the sensor.

Using SP5-019, the first tray can be set up to accommodate one of a wider range of paper sizes. If this is done, the readings from the first tray's sensor are ignored. If a different size of paper is used without changing SP5-019, paper jams will result.

11.7 SIDE FENCE DOUBLE STOPPER MECHANISM [A157/A159/A160]

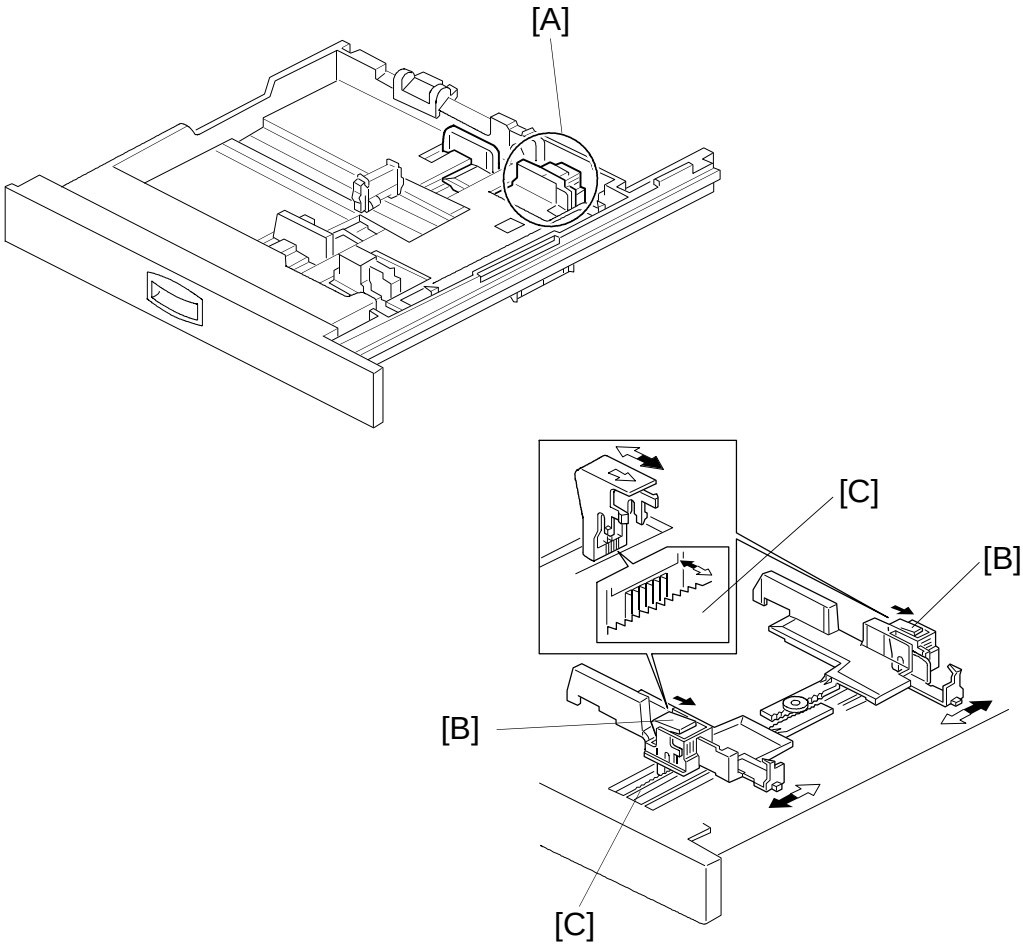

In this model, there is a side fence stopper mechanism for both the front and rear side fences.

If the tray is closed with excessive force after loading paper, paper may come over the rear side fence, because the fence is deformed by the weight of the paper leaning against it. As a result, skewing or paper jams may occur. To prevent this, a side fence stopper mechanism [A] has been added to the rear side fence also.

The release levers [B] have a stopper which contains teeth like those on a gear. The guide rails [C] also have teeth. When the release lever is pushed, the gear teeth release each other and the side fences can be moved.

11.8 LARGE CAPACITY TRAY

11.8.1 Paper Lift Mechanism

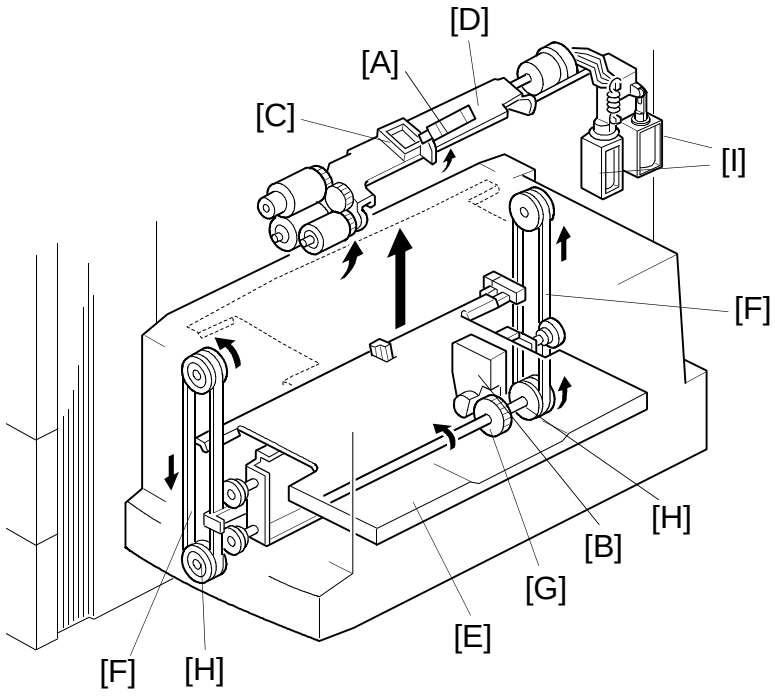

The LCT upper limit sensor [A] above the paper feed upper guide plate controls the LCT lift motor [B]. The actuator [C] for the sensor is on the pick-up roller bracket [D]. The LCT lift motor drives the LCT bottom plate [E] which is attached to the timing belts [F] through the helical gear [G], drive pulleys [H], and a timing belt.

When the LCT top cover is closed, the LCT cover switch actuates and the both pick-up solenoids [I] are energized. The pick-up roller bracket then lowers and the LCT upper limit sensor is deactivated. At this time, the LCT lift motor starts rotating and the LCT bottom plate starts lifting.

When the top sheet of the paper stack raises the pick-up roller, the LCT upper limit sensor is activated and the LCT lift motor stops. Shortly after, the pick-up solenoids turn off and the pick-up roller goes back to the up position.

During the copy cycle, the pick-up roller is lowered to prepare for feeding the next sheet of paper. When the level of the paper stack has fallen, the LCT upper limit sensor becomes deactivated and the LCT lift motor turns on to maintain the correct level for paper feed.

11.8.2 Paper Feed Mechanism

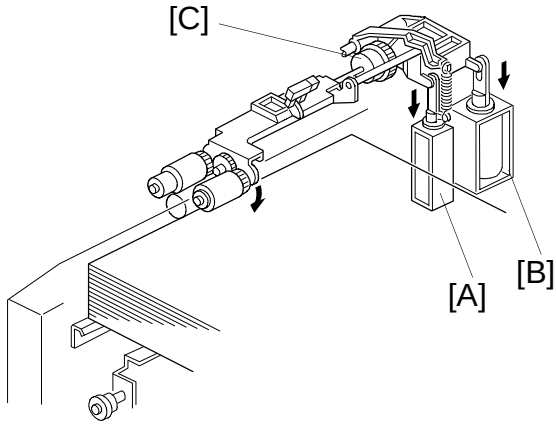

The LCT uses an FRR feed system. Unlike for the A153/155/156 paper trays, the feed and separation rollers are always in contact. The LCT pick-up solenoid [A], by-pass pick-up solenoid [B], and by-pass feed clutch [C] control paper feed from the LCT. When the Start key is pressed, the by-pass pick-up solenoid turns on, and stays on until the copy run has finished. At 150 ms after the Start key is pressed, the LCT pick-up solenoid turns on. Then, 100 ms after this, the by-pass feed clutch turns on to feed the top sheet of paper. Between sheets of paper, solenoid [B] turns off, but solenoid [A] stays on.

In machines without an LCT, the small solenoid [A] is missing, and the large solenoid [B] is installed in the same position as solenoid [A] above.

11.8.3 Paper End Detection

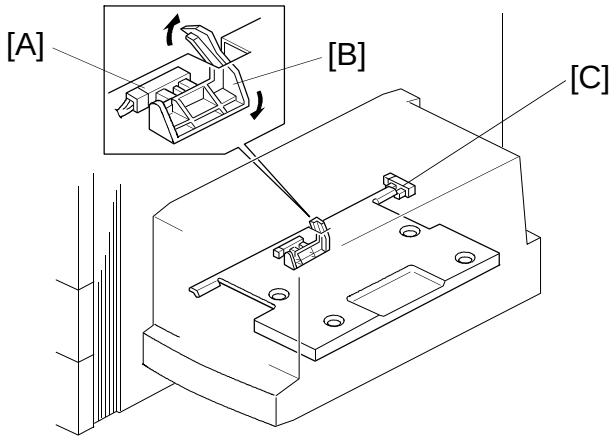

The LCT paper end sensor [A] is just under the LCT bottom plate.

When the LCT runs out of paper, the actuator [B] pivots into the LCT paper end sensor. Then the LCT lift motor starts to rotate in reverse to lower the LCT bottom plate. When the LCT lower limit sensor [C] is activated by the bottom plate, the LCT lift motor stops.

11.9 BY-PASS FEED TABLE

11.9.1 Table Open/Closed Detection

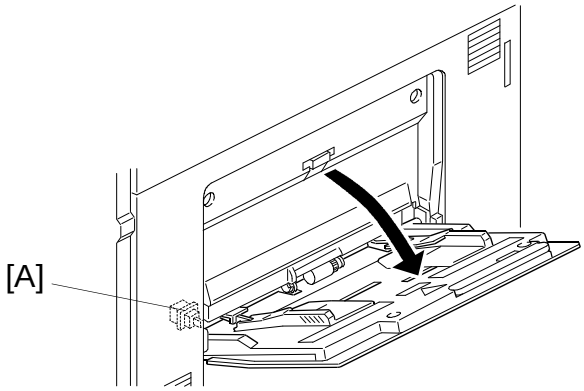

The by-pass feed table switch [A] detects when the by-pass feed table is opened. Then the CPU turns on the by-pass feed indicator on the operation panel.

11.9.2 Feed Mechanism/Paper End Detection

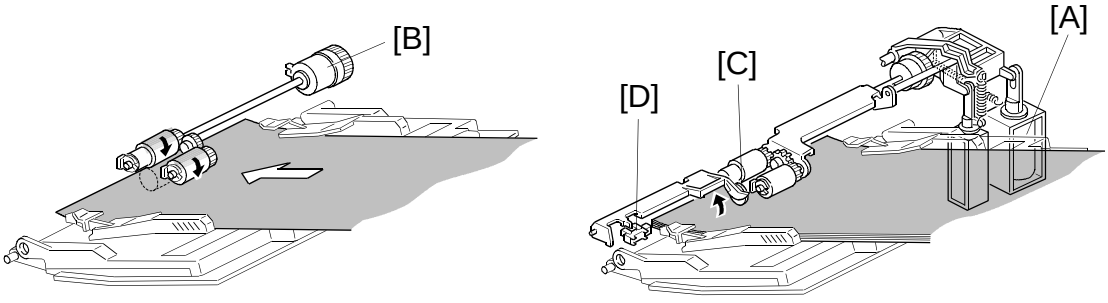

The by-pass feed table uses an FRR feed system, using the same rollers as the LCT, and one of the solenoids (solenoid [A]; also see LCT - Paper Feed Mechanism). Only one of the two solenoids in the mechanism is used, because the pick-up roller does not have to drop so far as it does when feeding from the LCT.

The user can put up to 40 sheets of paper on the by-pass feed table. Note that the paper can be pushed right into the machine, causing jams. The user must stop pushing the paper in when the by-pass feed indicator goes out.

When the Start key is pressed, the by-pass feed clutch [B] and the pick-up solenoid turn on to feed the top sheet of paper.

When there is no paper on the by-pass feed table, the paper end feeler [C] drops into the cutout in the lower guide plate and the by-pass feed paper end sensor [D] is deactivated.

11.9.3 By-pass Feed Paper Width Detection

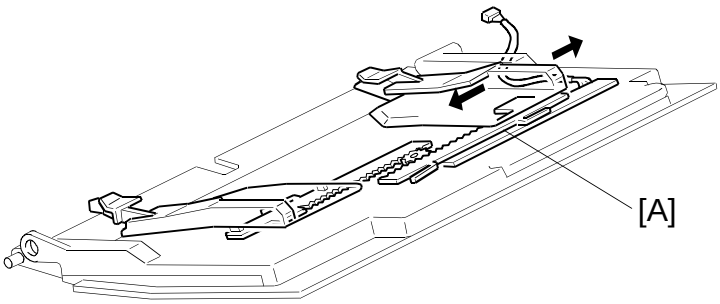

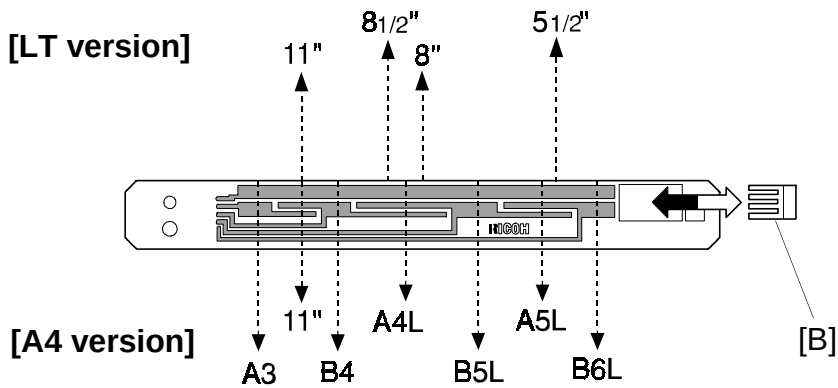

The by-pass feed paper width sensor board [A] monitors the paper width. The rear side fence is connected to the terminal plate [B]. When the side fences are positioned to match the paper width, the terminal plate slides along the wiring patterns on the detection board. The patterns for each paper width on the paper width detection board are unique. Therefore, the machine determines which paper width has been placed in the by-pass feed table by the signal output from the board.

For users with LT version models who wish to use A4 version paper sizes, or the other way round, the paper size from the by-pass feed tray can be fixed with SP5-019. The reading from the sensor will be ignored if this SP mode is used to select an exotic paper size. However, if the user attempts to use a size of paper that is different from that agreed with the technician for this setting, a paper jam will occur.

11.10 PAPER REGISTRATION

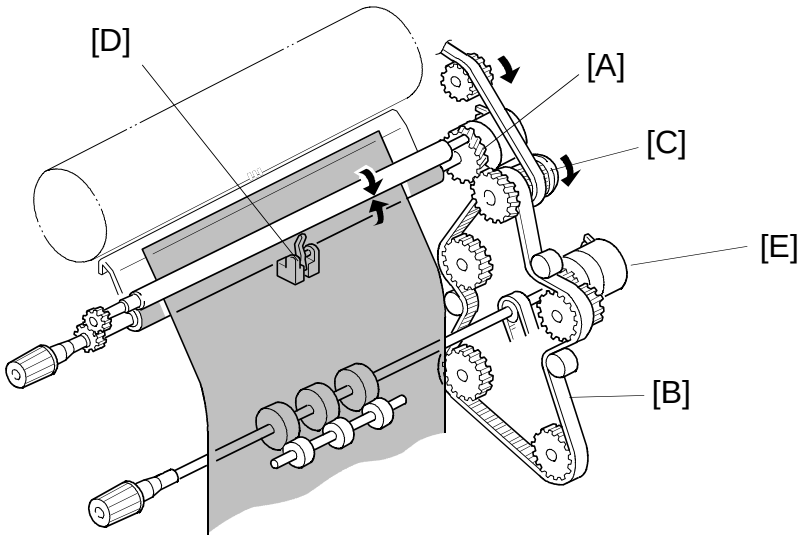

Main motor rotation is transmitted to the registration clutch [A] (located on the lower registration roller shaft) through the timing belt [B] and the relay gear [C].

The registration sensor [D] is positioned just before the registration rollers.

When the paper leading edge activates the registration sensor, the registration clutch turns off and the registration rollers stop turning. After the registration clutch turns off, the relay clutch [E] stays on for an extra 108 ms. This delay allows time for the paper to press against the registration rollers and buckle slightly to correct skew. The registration clutch energizes and the relay clutch re-energizes at the proper time to align the paper with the image on the drum. The registration and relay rollers feed the paper to the image transfer section.

The registration sensor is also used for paper misfeed detection.

11.11 PAPER FEED AND MISFEED DETECTION TIMING

11.11.1 Paper Feed Tray

A153/A155/A156 copiers (A4 sideways)

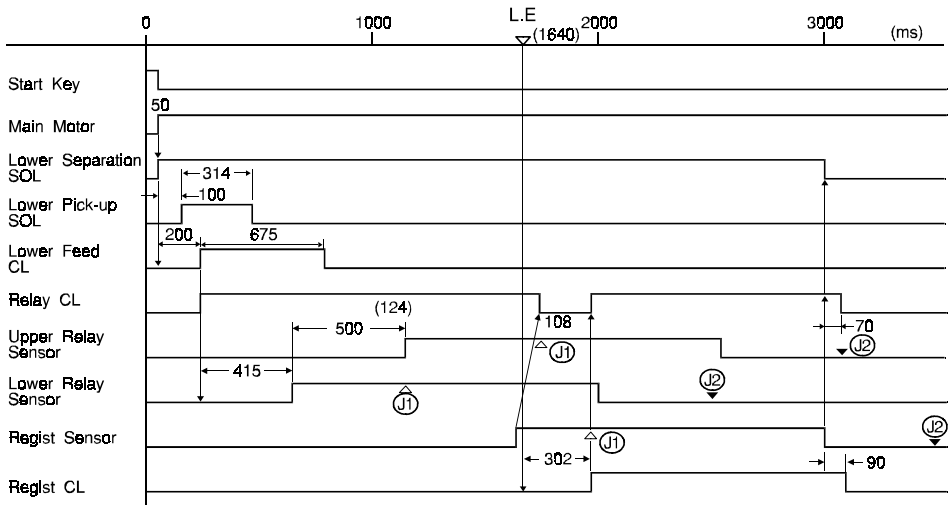

L.E. (Leading Edge): Start Time for Scanning the Original

A157/A159/A160 copiers (A4 sideways)

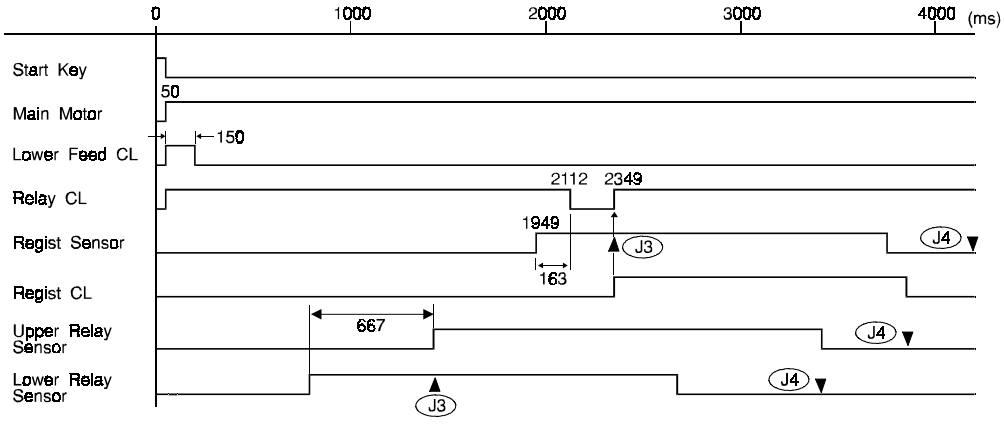

J1 and J2: Checks whether the sensors (relay sensors and registration sensor) are activated within 500 ms after the designated time for these sensors.

J3 and J4: Checks whether the sensors (relay sensors and registration sensor) are activated within 667 ms after the designated time for these sensors.

A155/A156 copiers (A4 sideways; two copies of a single-page original)

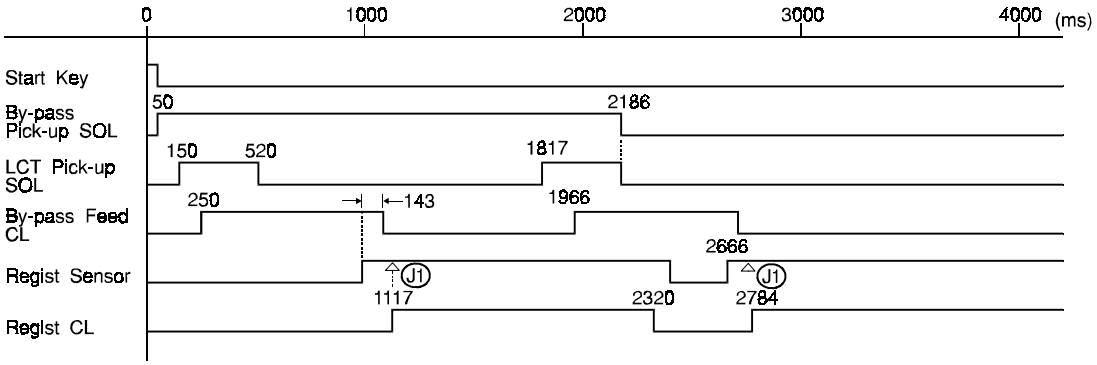

A159/A160 copiers (A4 sideways; two copies of a single-page original)

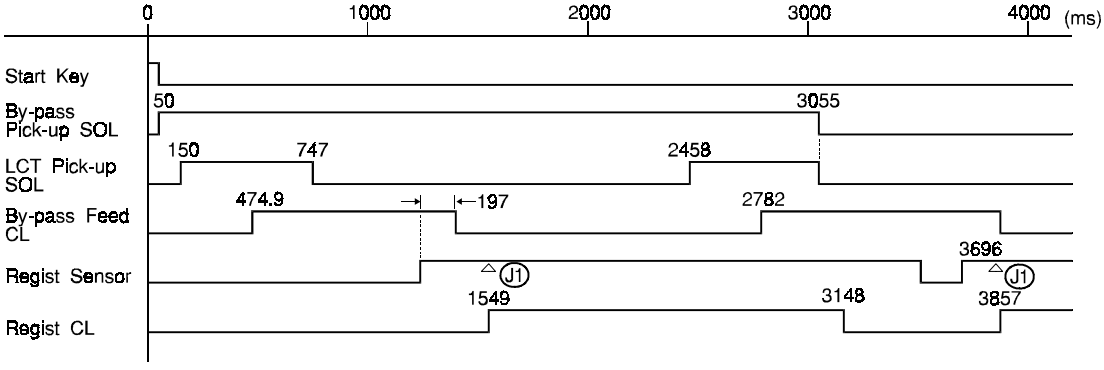

J1: Checks whether the registration sensor is activated when the registration clutch is turned on.

11.11.2 By-pass Feed

A153/A155/A156 copiers (A4 sideways)

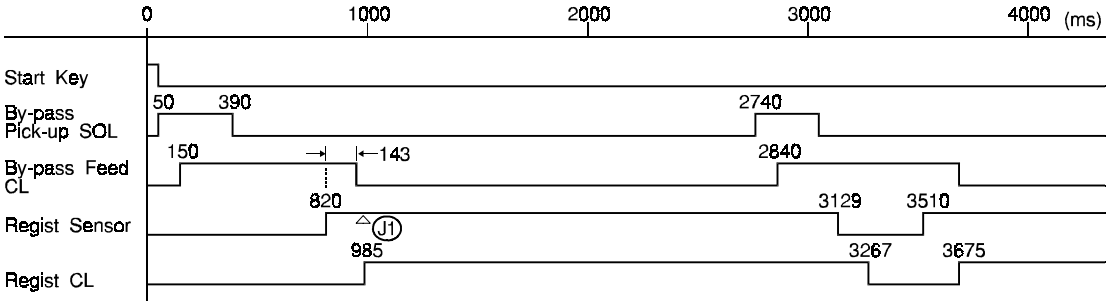

A157/A159/A160 copiers (A4 sideways)

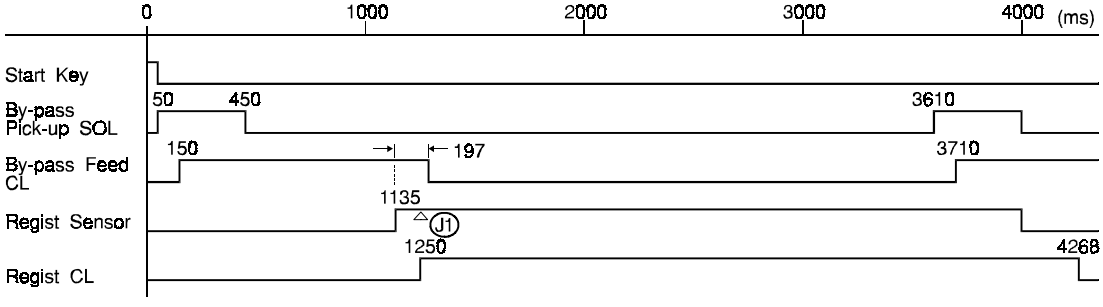

J1: Checks whether the registration sensor is activated when the registration clutch is turned on.

12. DUPLEX

12.1 OVERVIEW

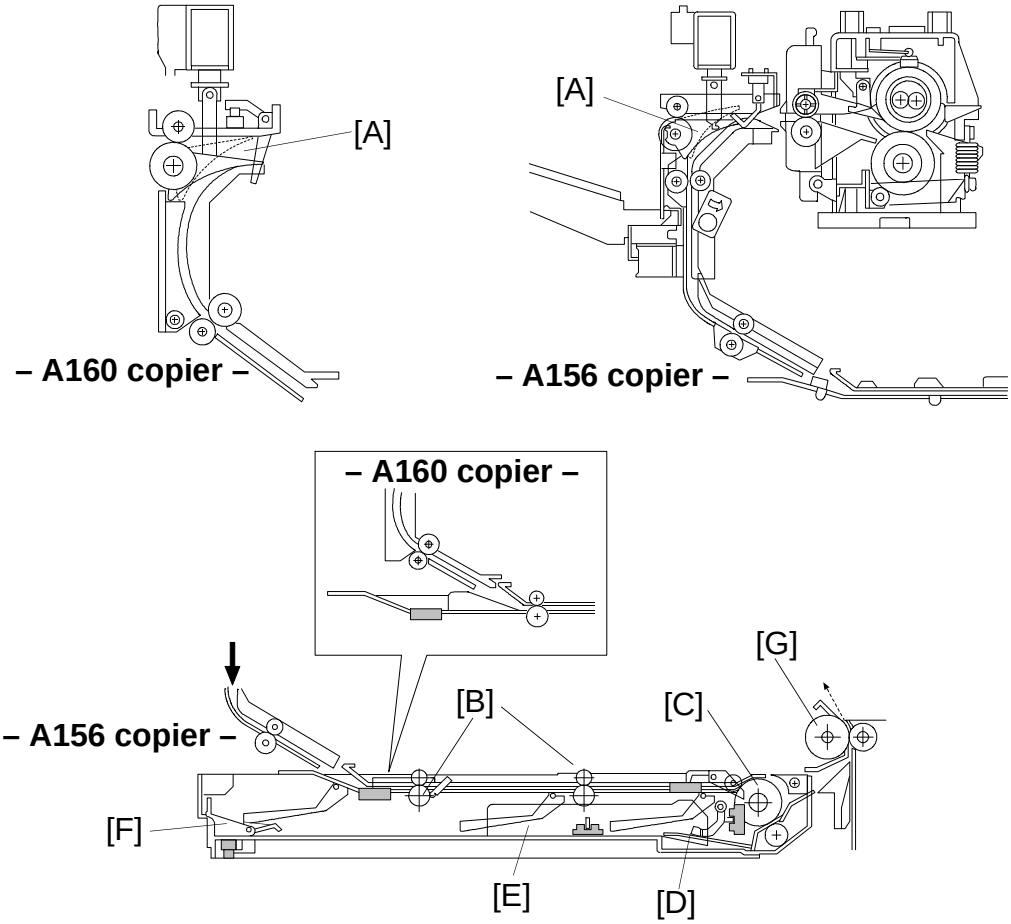

The duplex tray is used for multiple two-sided and single two-sided copying. Note the paper feed path differences between the A156 and the A160.

The junction gate [A] rotates up 1.1 seconds after the registration clutch has turned on, and the copy passes to the duplex tray. Shortly after the fusing exit sensor detects the leading edge of the paper, the entrance rollers [B] and duplex feed roller [C] start to rotate. At the same time, the duplex bottom plate [D] lowers.

The copy feeds over the duplex feed roller and into the tray. The jogger fences [E] and end fence [F] move inward to square the copy stack, then they move back 10.5 mm from the paper stack. After the final copy is delivered to the stack area, the jogger and end fences remain against the paper stack.

Soon after the final copy is squared, the duplex bottom plate lifts to the paper feed position and the duplex feed roller starts rotating counterclockwise to feed the top copy to the relay rollers [G]. The second side is then copied with the copy following the upper paper tray feed station paper path.

12.2 DRIVE MECHANISM

– A160 copier –

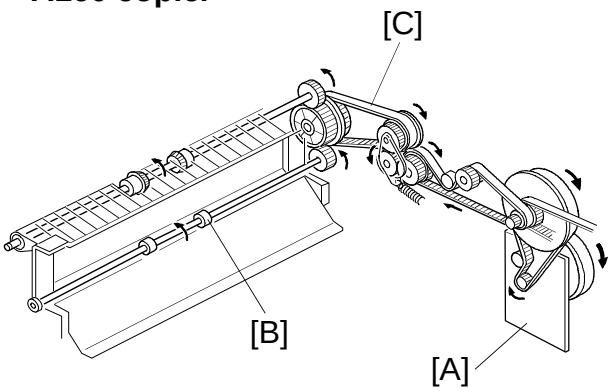

– A156 copier –

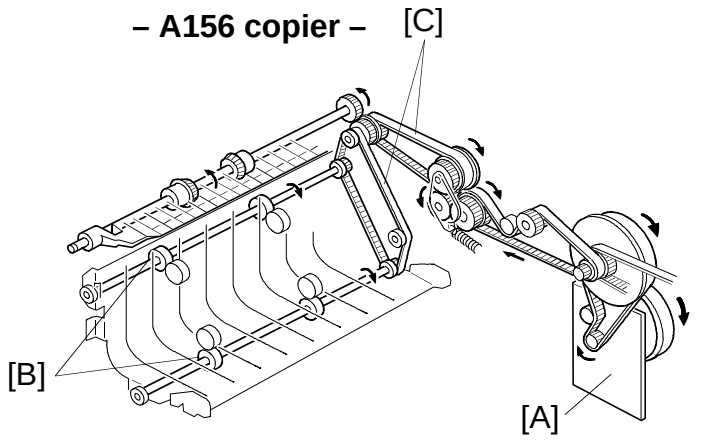

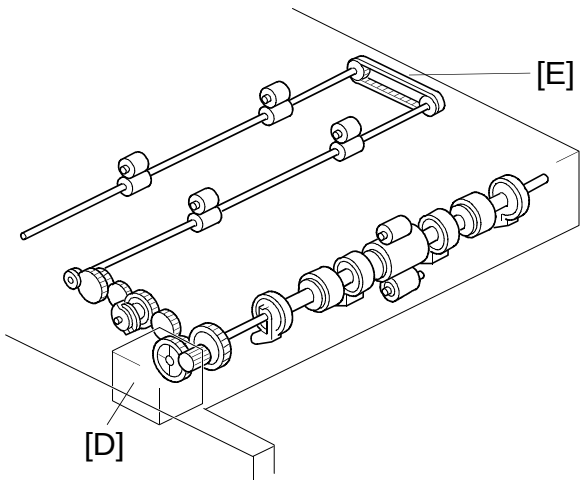

The main motor [A] drives the transport rollers [B] through the timing belts [C]. All rollers in the duplex tray are driven by the duplex feed motor [D] through a series of gears and a timing belt [E]. Helical gears are used to reduce noise.

The duplex feed motor also drives the duplex bottom plate up and down.

12.3 TURN GUIDE SECTION

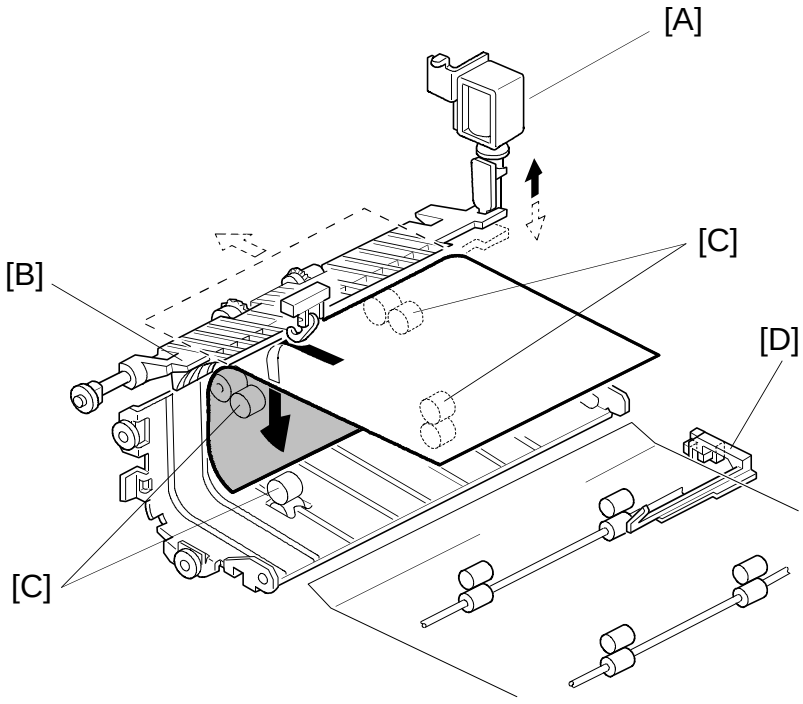

The junction gate solenoid [A] is energized 1.1 seconds after the registration clutch has been turned on. Then, the junction gate [B] rotates upwards to direct the copy paper to the duplex turn guide section. The junction gate solenoid stays on until the first side copies are stacked in the duplex tray.

The copy is then directed to the duplex entrance guide by the transport rollers [C]. There is a duplex entrance sensor [D] for paper misfeed detection.

12.4 DUPLEX ENTRANCE TO DUPLEX TRAY

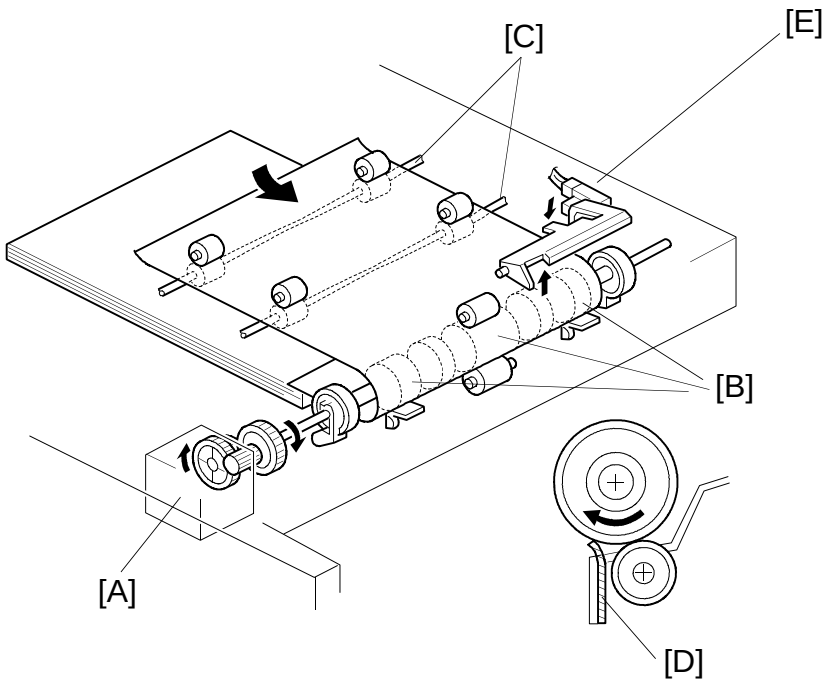

The duplex feed motor [A] starts turning 500 ms after the leading edge of the paper activates the fusing exit sensor. This motor drives the duplex feed rollers [B] and the duplex transport rollers [C]. The copy paper from the turn guide section is directed to the duplex tray through these rollers.

The tip of the flip mylar [D] moves to the left (front view) when the duplex feed rollers rotate to feed the copy into the duplex tray. The mylar presses the copy against the duplex feed rollers, ensuring that the trailing edge of the copy clears the guide plate.

The duplex turn sensor [E] detects the trailing edge of the paper as it enters the tray.

12.5 DUPLEX STACKING

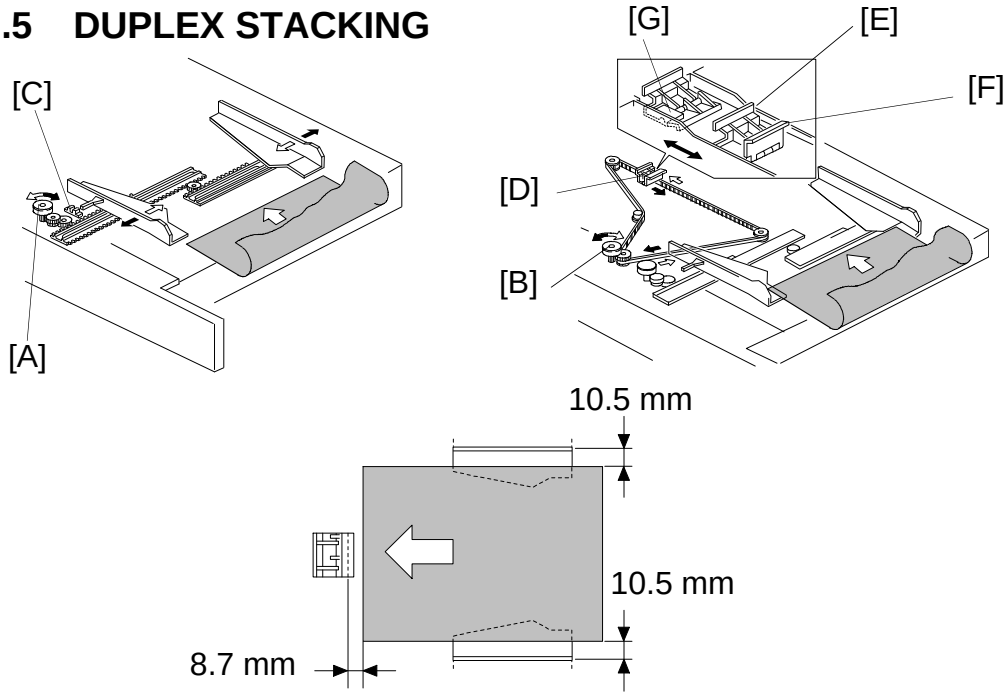

There are two motors for driving the fences. The side jogger fences are driven by the side fence jogger motor [A]. The end jogger fence is driven by the end fence jogger motor [B]. Using two separate motors for the side and end fences allows the duplex tray to handle all paper sizes from A3/11" x 17" to A5/ 8 1/2" x 5 1/2" sideways.

There are two home position sensors. One is for the jogger fences [C], and the other is for the end fence [D]. When the main switch turns on, the side fence jogger motor and the end fence jogger motor rotate to place the jogger fences and the end fence at their home positions.

When the registration clutch turns on, the side fences move 10.5 mm, and the end fence moves 8.7 mm away from the selected paper size. Then, when the copy paper is delivered to the duplex tray, the jogger fences move inward to square the paper. (This is done 690 ms [A156] or 920 ms [A160] after the duplex turn sensor detects the trailing edge of copy paper. The duplex turn sensor is [E] in the diagram on the previous page) Shortly after this, the jogger fences move back to their previous positions. After the last copy of the first side copy run enters the duplex tray, the jogger fences remain against the paper stack.

There are two end fences. One [E] is for A3/11 x 17" size paper. The other [F] is for sizes smaller than B4. They are included as a unit. When A3/11 x 17" size paper is in the duplex tray, the end fence unit moves to the left and the B4 end fence rotates down as it is pressed against the end fence stopper [G].

12.6 PAPER FEED FROM THE DUPLEX TRAY

12.6.1 Tray Lift Mechanism

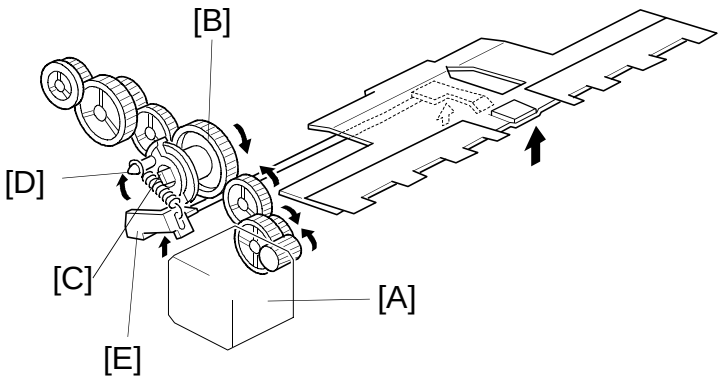

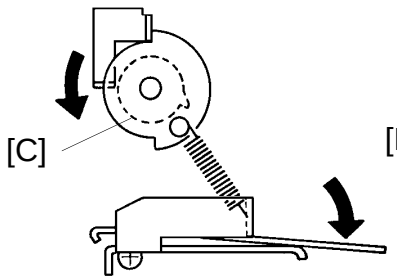

- While copying the first side -

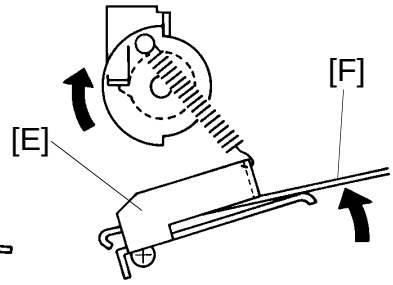

- While lifting the tray -

After the first side copies have been made, the duplex feed motor [A] changes direction, and the cam clutch gear [B] lifts up the duplex bottom plate through a series of gears.

While the first side is being copied, the duplex feed motor is rotating clockwise and the cam clutch gear is rotating counter clockwise (see the above drawing).

When all copies have been stacked in the duplex tray, the duplex feed motor rotates counterclockwise, and the cam clutch gear rotates clockwise. The cam clutch [C] also rotates clockwise because of the spring inside the clutch. The pin [D] on the clutch lifts up the duplex lift lever [E] through a spring, raising the duplex bottom plate [F].

When the duplex feed motor rotates clockwise again, the cam clutch rotates counterclockwise, and the bottom plate lowers.

12.6.2 Paper Feed System

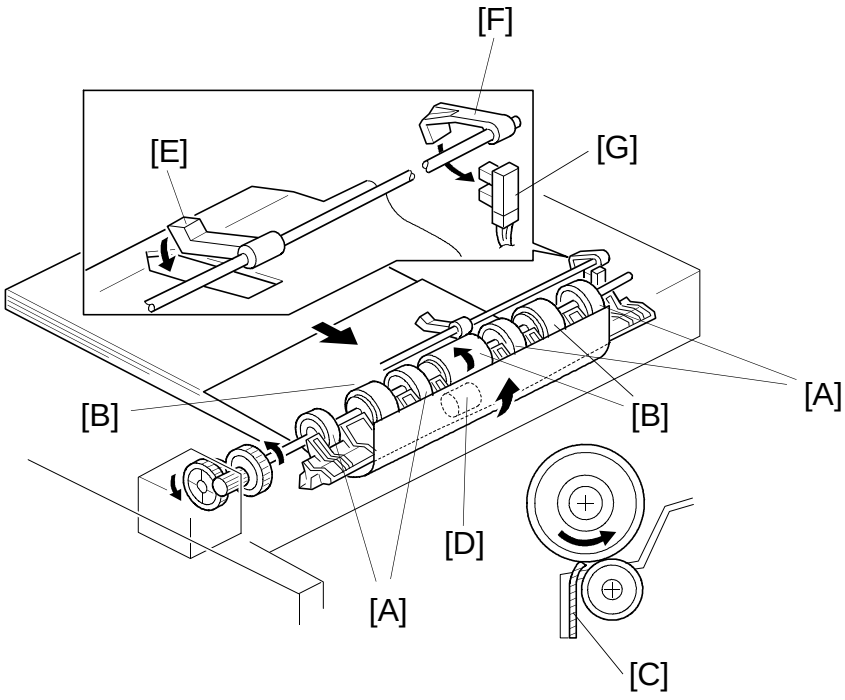

While paper is being stacked in the duplex tray, the paper flatteners [A] correct curl at the leading edge of the paper.

After all the paper has been stacked in the duplex tray, the jogger fences square the paper stack and the duplex feed motor rotates counterclockwise briefly to prepare to feed the paper from the duplex tray. At this time, the bottom plate rises and the duplex feed rollers [B] move the flip mylars [C] back to the right (front view).

The duplex paper feed system consists of three sets of duplex feed rollers and a friction roller [D]. As the friction roller has a one-way bearing inside, it rotates freely during paper stacking and locks during paper feeding. The duplex feed rollers can feed only the top sheet of the stack because the friction rollers function in the same way as a friction pad does.

After that, the second side copies follow the upper paper tray feed station paper path.

After the duplex tray runs out the final copy, the paper end feeler [E] drops through a slot in the duplex bottom plate. The duplex paper end actuator [F], which is on the same shaft as the duplex paper end feeler, pivots into the duplex paper end sensor [G]. The sensor sends the signal to the cpu to stop the next paper feed cycle.

For a diagram of the paper feed path, see "Paper Path - Duplex Copying" in the Overall Machine Information section.

13. IMAGE FUSING

13.1 OVERVIEW

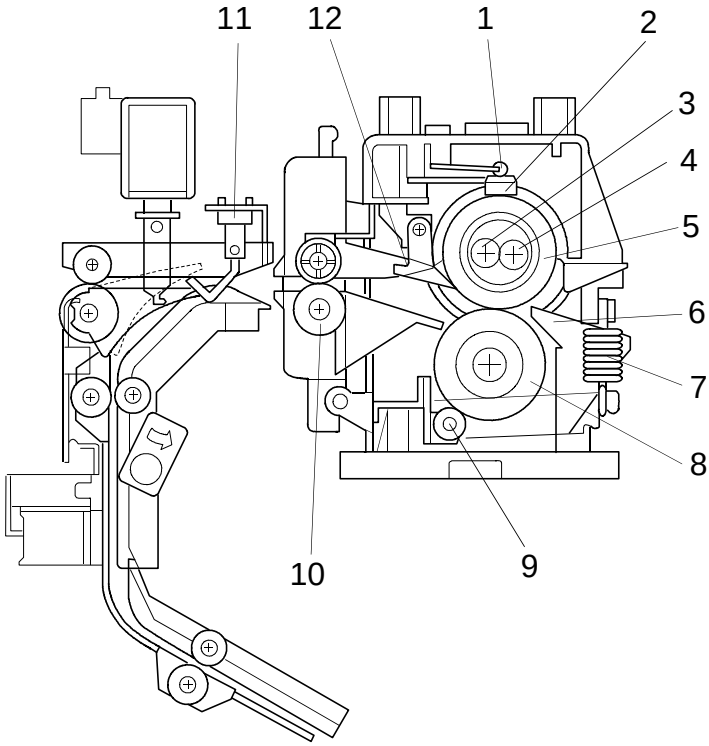

The fusing unit consists of the following parts:

1. Thermofuses (2 pcs)
2. Thermistors (2 pcs)
3. Secondary fusing lamp
4. Main fusing lamp
5. Hot roller
6. Lower entrance guide
7. Pressure springs
8. Pressure roller
9. Cleaning roller
10. Fusing exit roller
11. Fusing exit sensor
12. Hot roller strippers

13.2 FUSING DRIVE AND RELEASE MECHANISM

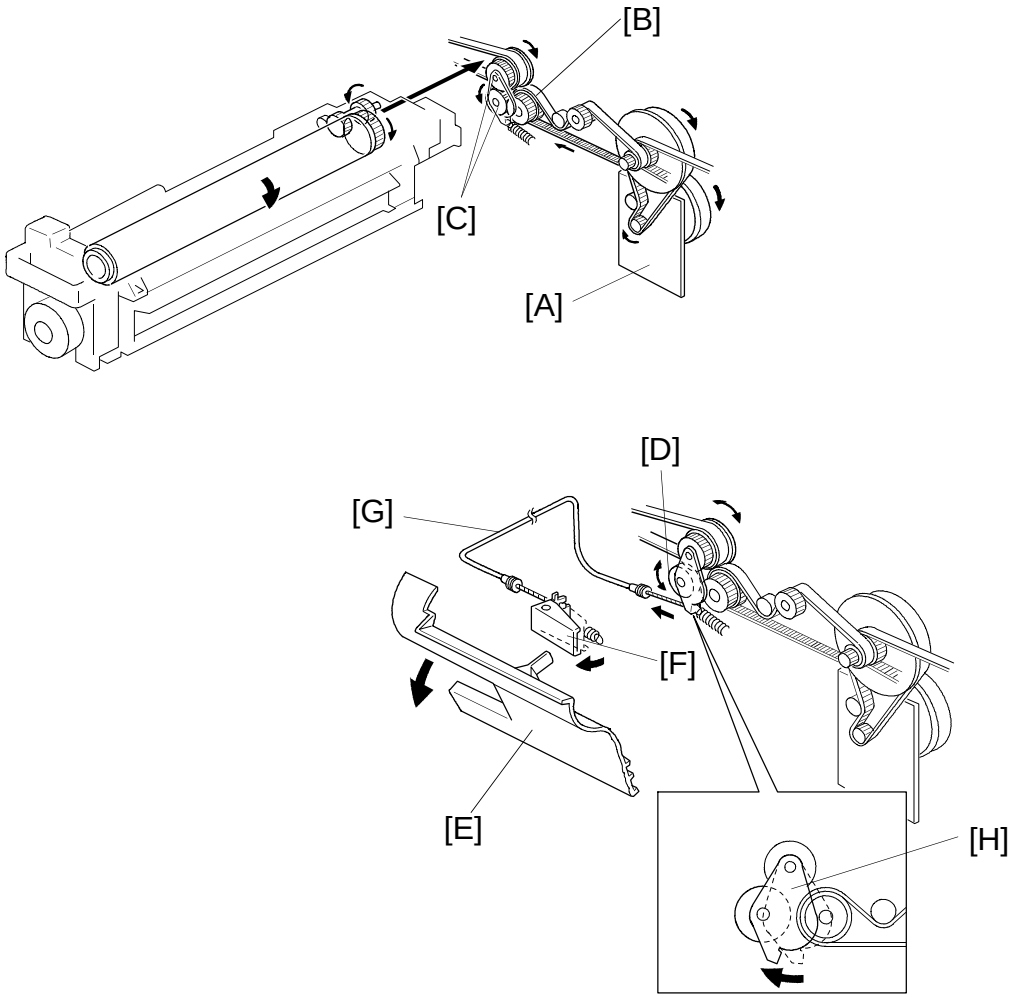

The main motor [A] drives the fusing unit through a timing belt [B] and some gears [C].

The fusing unit drive release mechanism automatically disengages the fusing unit drive gear [D] when the front cover [E] is opened. This allows the fusing unit drive gear to rotate freely so that misfed paper can be easily removed.

When the front cover is opened, the actuator plate [F] pulls release wire [G]. The wire pulls the fusing unit gear bracket [H] and the fusing unit drive is disengaged.

13.3 FUSING ENTRANCE GUIDE SHIFT MECHANISM

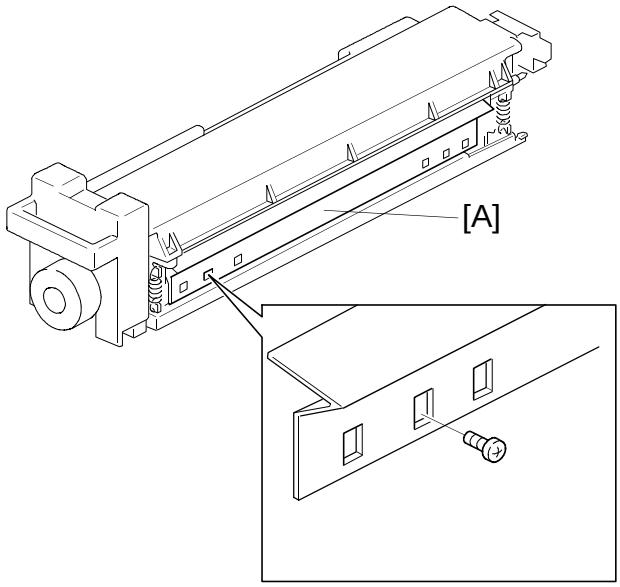

The entrance guide [A] for this machine is adjustable for thick or thin paper.

For thin paper, move the entrance guide up (this is the standard position). This slightly lengthens the paper path which prevents the paper from creasing in the fusing unit.

For thick paper, move the entrance guide down. This is because thick paper does not bend as easily, and is therefore less prone to creasing. Also, the lower setting allows more direct access to the gap between the hot and pressure rollers. This prevents thick paper from buckling against the hot roller, which can cause blurring at the leading edge of the copy.

There are three screw holes on each side for securing the entrance guide. Normally, the center screw hole on each side is used. The other screw holes are spare in case the center holes get damaged.

13.4 PRESSURE ROLLER

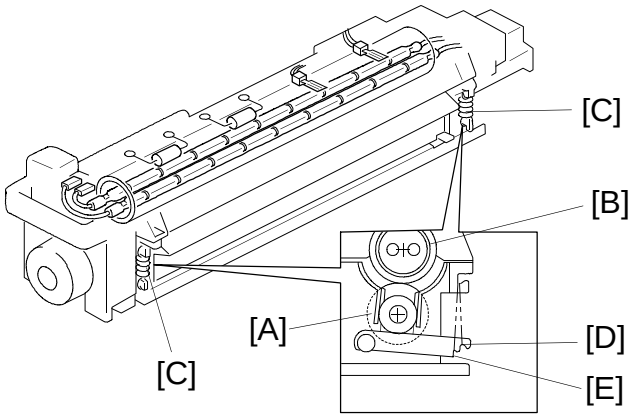

The pressure roller [A] is made of silicone rubber with a teflon tube coating. The pressure springs [C] constantly apply pressure between the hot roller [B] and the pressure roller.

The pressure can be changed by adjusting the position of the pressure springs. The upper position [D] is the normal setting. The lower position [E] increases the pressure and this prevents insufficient fusing by the fusing unit.

13.5 CLEANING MECHANISM

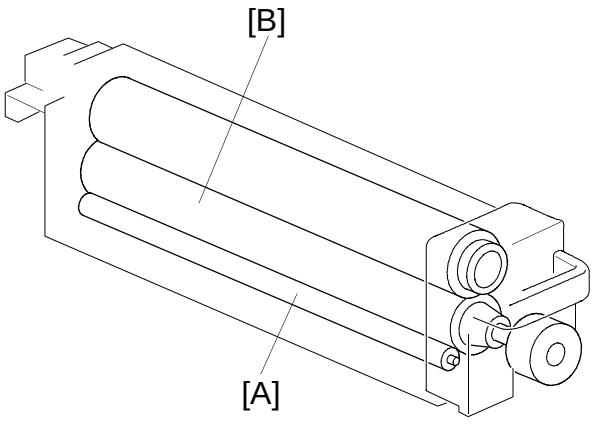

The cleaning roller [A] is always in contact with the pressure roller [B]. It collects toner and paper dust adhering to the surface of the pressure roller.

This is because the cleaning roller is made of metal and collects adhering matter more easily than the pressure roller (which has a teflon coating).

13.6 FUSING LAMP CONTROL

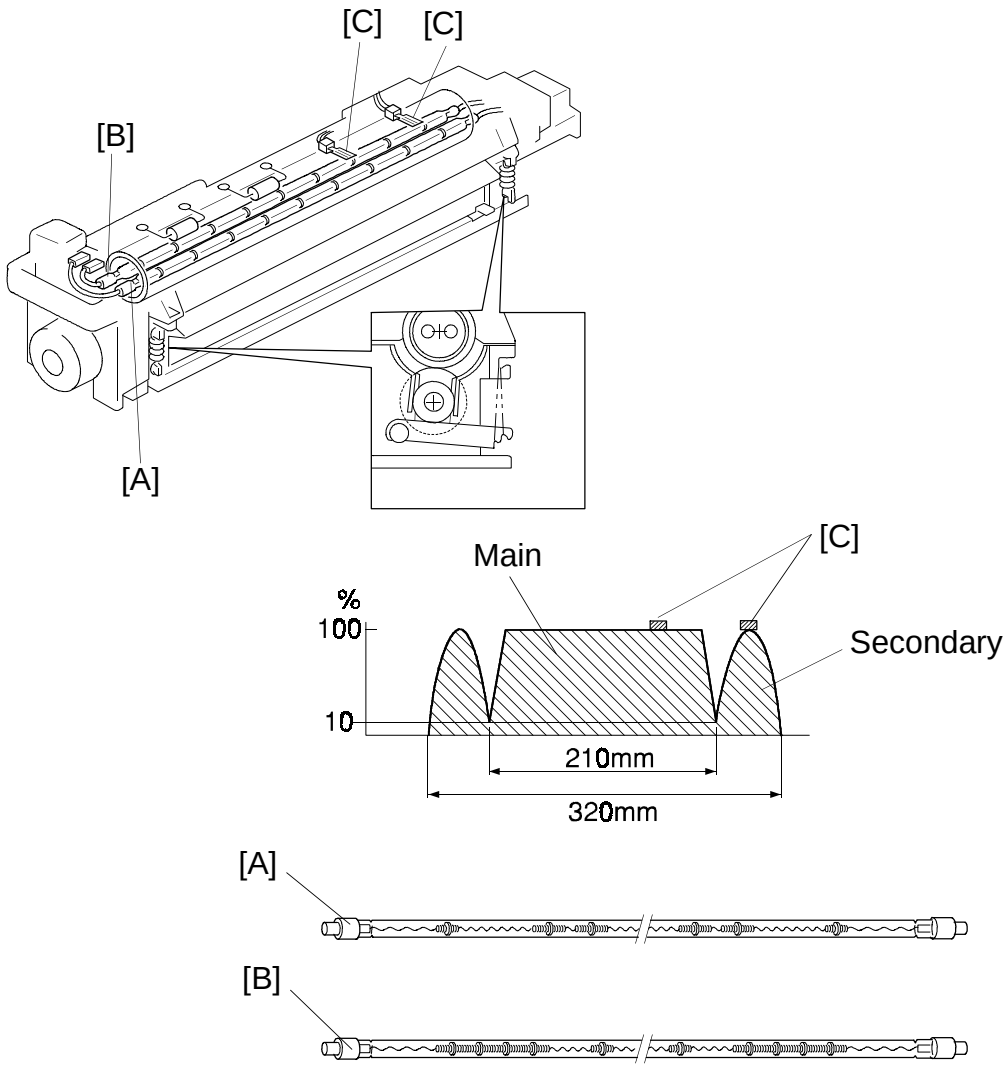

There are two fusing lamps in the hot roller: the main fusing lamp (550 W) [A] and the secondary fusing lamp (350 W) [B]. The positions of the filaments in the main and secondary fusing lamps are different. So, the main fusing lamp heats the center of the hot roller and the secondary fusing lamp heats both ends of the hot roller. Using this system, the temperature of the center and ends of the hot roller will be uniform.

The temperatures at the center and the side are monitored by different thermistors [C].

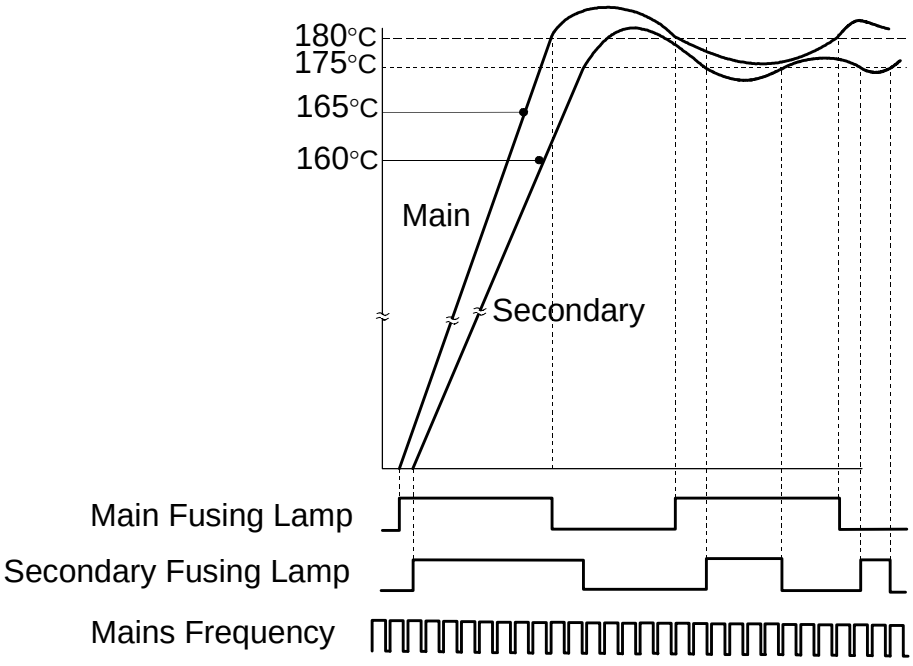

– A153/A155/A156 copiers –

	Fusing Lamp	Standby Temp.	Operation Temp.
A153/A155/A156 copiers	Main	165°C	180°C
	Secondary	160°C	175°C
A157/A159/A160 copiers	Main	160°C	175°C
	Secondary	160°C	175°C

When the main switch turns on, the CPU checks the mains frequency for 500 ms; this is done in case phase control mode is selected later. Then the CPU turns on the main fusing lamp. After 3 more seconds, the secondary fusing lamp is turned on. This delay reduces the surge current after the main switch is turned on.

When both thermistors detect the stand-by fusing temperature (see the above table), the copier starts fusing idling. If the fusing temperature was above 50°C when the main switch was turned on, the copier does not go into the fusing idle cycle.

If the fusing lamps are turned on while the exposure lamp is on, the power supplied to the exposure lamp may fluctuate, possibly degrading the copy quality. To prevent this, in this machine, the fusing lamps can either stay off or change from on to off while the exposure lamp is on.

There are two types of fusing unit control: on/off control, and phase control. The mode can be selected with SP1-104.

- On/Off Control -

When both thermistors detect the operation temperature, both fusing lamps are turned off. After that, the CPU keeps the operation temperature constant by turning the lamps on and off. This is the default setting.

- Phase Control Mode -

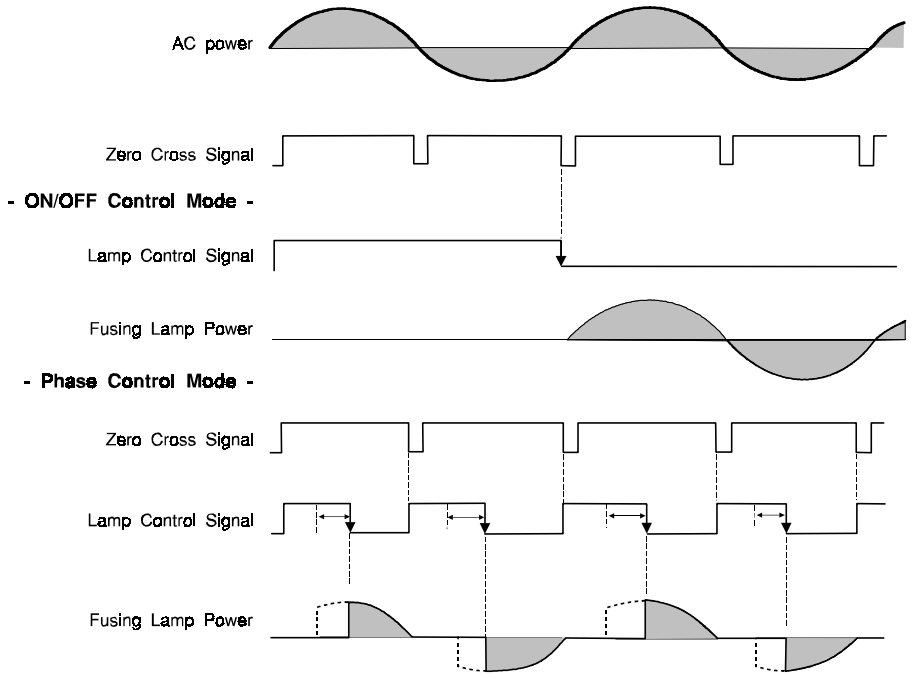

In on/off control mode, the ac drive board supplies full ac power to the fusing lamps.

In phase control mode, the main board CPU controls the lamp control signal duty cycle which in turn affects the duty cycle of the mains supply.

Phase control only affects the main fusing lamp. The secondary lamp is always controlled using on/off control.

When the main switch is turned on, the main board starts to output the lamp control signal, which is generated from the zero cross signal.

The duty cycle of the lamp control signal depends on the temperature of the hot roller. When the hot roller temperature is low, the lamp control signal pulse will be wider, and the mains duty cycle will be wider. Conversely, if the roller temperature is high, the duty cycles will be smaller to reduce the temperature.

Phase control mode is selected only if the user has a problem with electrical noise on the same circuit or interference.

13.7 OVERHEAT PROTECTION

If the hot roller temperature stays higher than 230°C for 5 seconds, the CPU cuts off the power to the fusing lamps. At the same time, E-543 lights on the operation panel.

Even if the thermistor overheat protection fails, thermofuses are installed in series with the common ground line of the fusing lamps. If the temperature of either thermofuse reaches 169°C, the thermofuse opens, removing power from the fusing lamps. At the same time, the copier stops operating.

13.8 ENERGY SAVER FUNCTIONS

When the copier is not in use, the energy saver function reduces power consumption by decreasing the fusing temperature.

If the auto energy saver mode timer (SP5-102) runs out, the copier automatically enters energy saver mode. The fusing lamp switches off until the lamp reaches the temperature selected with SP1-105-002. The lower this temperature is, the longer the waiting time until the copier returns to the ready condition.

Also, when the Energy Saver/Clear Mode key is held down for over 1 s, the copier goes into the energy saver mode. The Energy Saver indicator turns on and all the other indicators turn off.

There is also an auto-off timer that can be programmed with SP5-305. If this timer expires, the machine cuts all power to the fusing unit.

The copier returns to the ready condition if someone stands at the front of the copier (in other words, when the Auto Response sensor is activated).



SECTION 3

INSTALLATION



1. INSTALLATION REQUIREMENTS

1.1 ENVIRONMENT

1. Temperature Range: 10°C to 30°C (50°F to 86°F)
2. Humidity Range: 15% to 90% RH
3. Ambient Illumination: Less than 1,500 lux (do not expose to direct sunlight.)
4. Ventilation: Room air should turn over at least 3 times/hour.
5. Ambient Dust: Less than 0.10 mg/m^3 (2.7 x 10^{-6} oz/yd^3)
6. If the place of installation is air-conditioned or heated, place the machine:
   a) where it will **not** be subjected to sudden temperature changes.
   b) where it will **not** be directly exposed to cool air from an air conditioner.
   c) where it will **not** be directly exposed to heat from a heater.
7. Do not place the machine where it will be exposed to corrosive gases.
8. Do not install the machine at any location over 2,000 m (6,500 feet) above sea level.
9. Place the copier on a strong and level base.
10. Do not place the machine where it may be subjected to strong vibrations.

1.2 MACHINE LEVEL

1. Front to back: Within 5 mm (0.2") of level
2. Right to left: Within 5 mm (0.2") of level

1.3 MINIMUM SPACE REQUIREMENTS

Place the copier near the power source, providing clearance as shown:

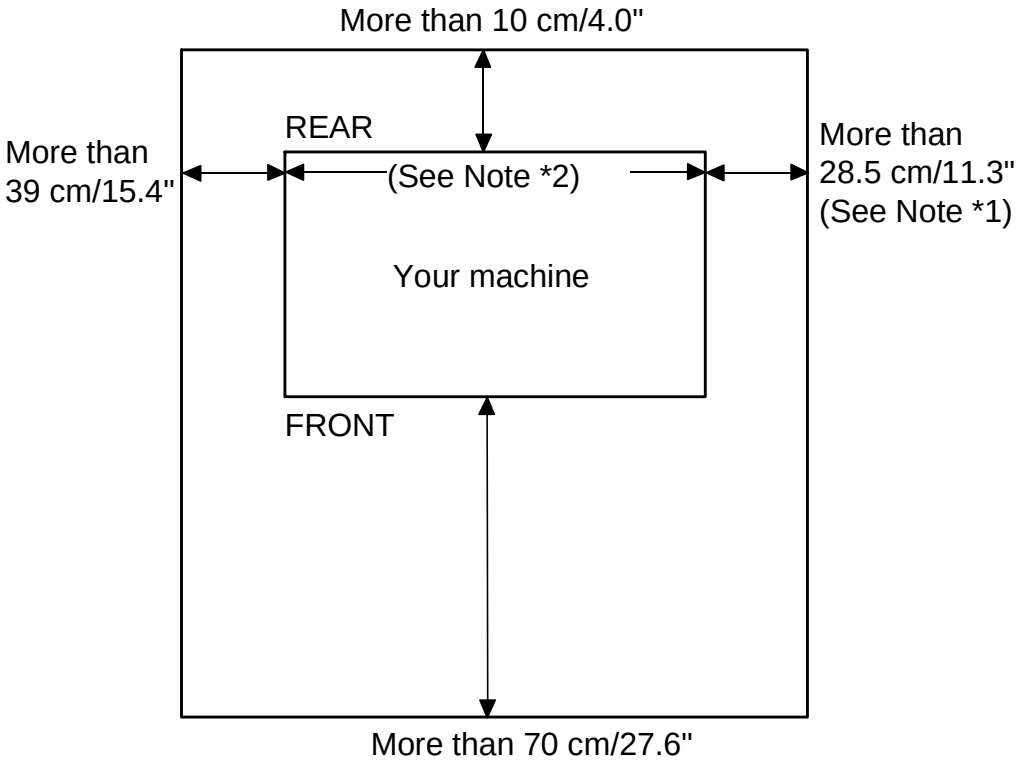

NOTE: *1. In machines without an LCT, the distance between the wall and the edge of the by-pass feed table must be more than 28.5 cm/11.3".

*2. Copier only + Receiving Tray
103.0 cm/40.6" (with LCT: 125.8 cm/49.6")
Copier + A554 Sorter/Stapler
103.2 cm/40.7" (with LCT: 126.0 cm/49.7")
Copier + A555 Sorter/Stapler
100.1 cm/39.5" (with LCT: 122.9 cm/48.4")
Copier + A556 Sorter
96.6 cm/38.1" (with LCT: 119.4 cm/47.1")

1.4 POWER REQUIREMENTS

! CAUTION

A. Be sure to ground the machine.

B. Make sure the plug is firmly inserted in the outlet.

C. Avoid multi-wiring.

1. Input voltage level:

120V/60Hz:	More than 12 A (for North America)
220V~240V/50Hz:	More than 7 A (for Europe)
220V/50Hz:	More than 7 A (for Asia)
110V/60Hz:	More than 12 A (for Taiwan)
220V/60Hz:	More than 7 A (for Saudi Arabia, Philippines)

2. Permissible voltage fluctuation: 10%

3. Do not set anything on the power cord.

2. COPIER INSTALLATION

2.1 ACCESSORY CHECK

Check the quantity and condition of the accessories in the box against the following list:

Description	Qty
1. Paper Size Decal	1
2. Symbol Explanation Decal (except for the A156 copier)	1
3. Optional Zoom Function Decal	1
4. Optional Margin Adjustment Function Decal	1
5. Combine Originals Explanation Decal (except for the A156 copier)	1
6. Receiving Tray	1
7. Operating Instructions (except for –27 machines)	1
8. User Survey Card (–17 machines only)	1
9. New Equipment Condition Report	1

2.2 COPIER INSTALLATION PROCEDURE

- A153/A155/A156 copiers -

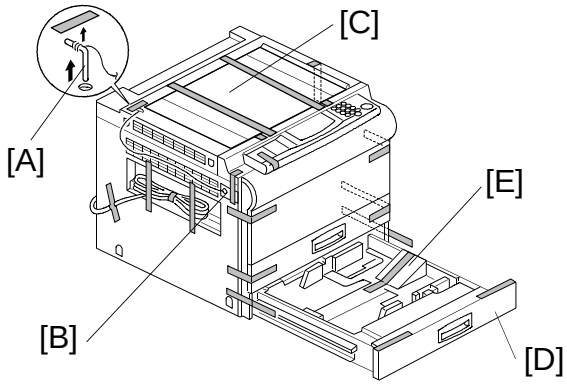

- A155/A156/A159/A160 copiers -

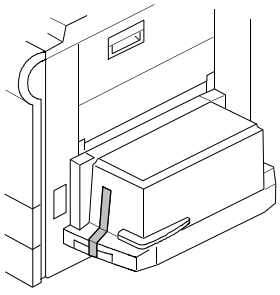

- A157/A159/A160 copiers -

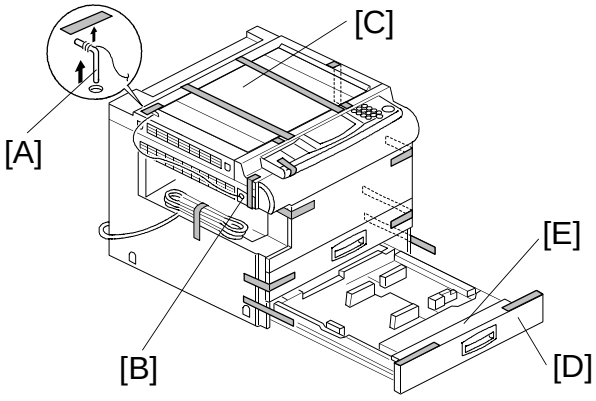

! CAUTION

Never lift the machine by holding the LCT, or the LCT will break.

NOTE: (1) Keep the shipping retainers after installing the machine. They will be reused if the machine is moved to another location in the future.

(2) Proper reinstallation of the shipping retainers is required in order to avoid any transport damage. It is most important to put back the scanner lock pin when transporting this copier. If not, skewed image may result.

1. Remove the scanner lock pin [A] and red tag [B] as shown.
2. **A155/A156/A159/A160 copiers only:** Remove the strips of tape and the sheet of paper [C]. Also, remove the strip of tape on the LCT.
3. Pull out the paper tray [D], and remove the strips of tape and the bottom plate stopper [E]. Then install the paper tray in the copier (1 tray for duplex machines and 2 trays for non-duplex machines).

- A156 copier -

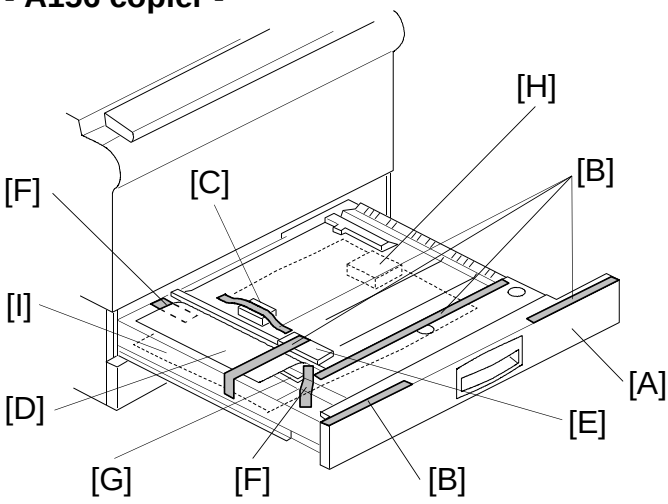

- A160 copier -

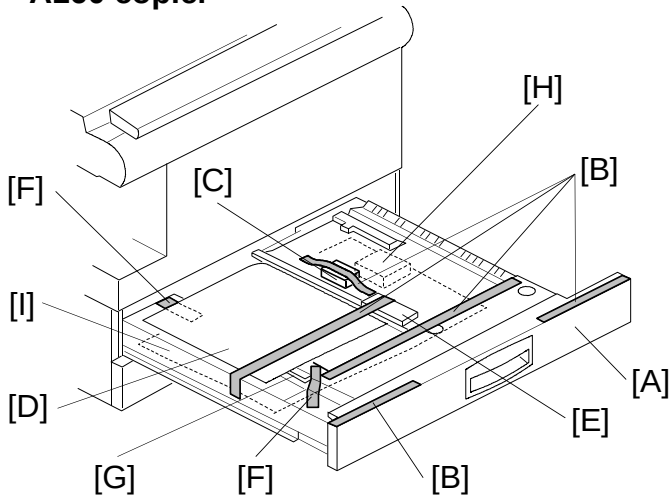

4. **A156/A160 copiers only:**
   1) Pull out the duplex tray [A] and remove the strips of tape [B].
   2) Remove the guide roller stopper [C] and a sheet of paper [D].
   3) Open the upper duplex guide plate [E] and remove the strips of tape [F].
   4) Open the lower duplex guide plate [G], and remove the styrofoam support [H] and the sheet of paper [I].
   5) Install the duplex tray in the copier.

- A153/A155/A156 copiers -

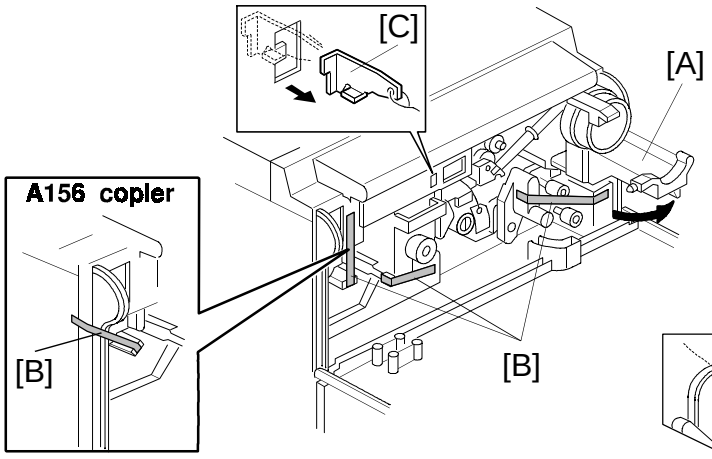

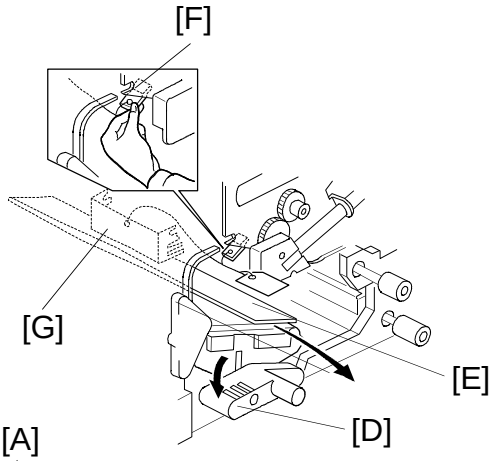

- A157/A159/A160 copiers -

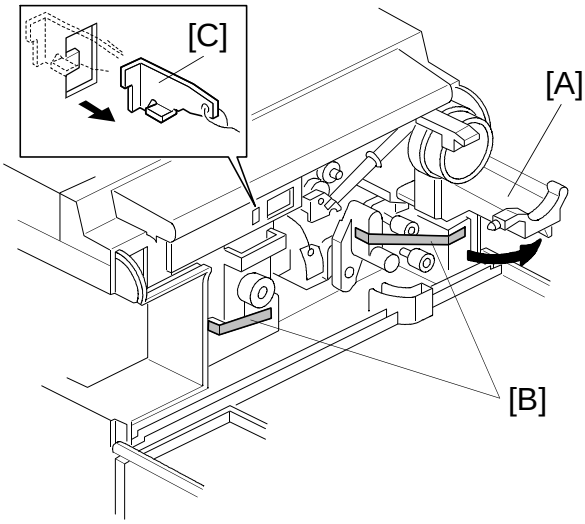

5. Open the front cover and swing out the toner bottle holder [A].
6. Remove the strips of tape [B].
7. Remove the switch actuator lock bracket [C] as shown.
8. Turn the "A1" lever [D] counterclockwise to lower the transfer belt unit. Then remove the cushion sheet [E].
9. Remove the blade release wedge [F] together with the pick off pawl release mylar [G].
10. Return the "A1" lever to the set position.

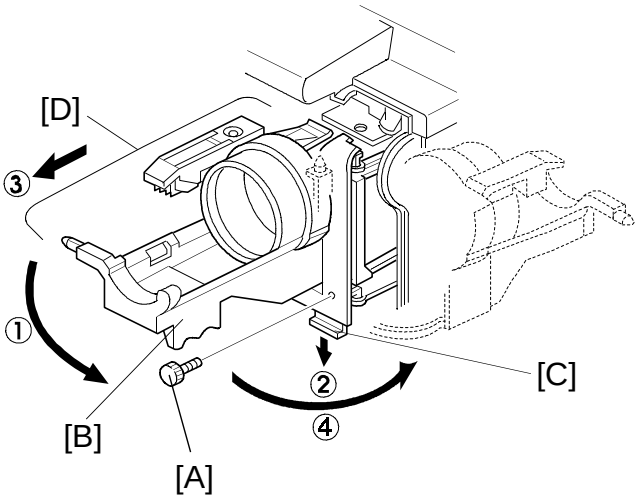

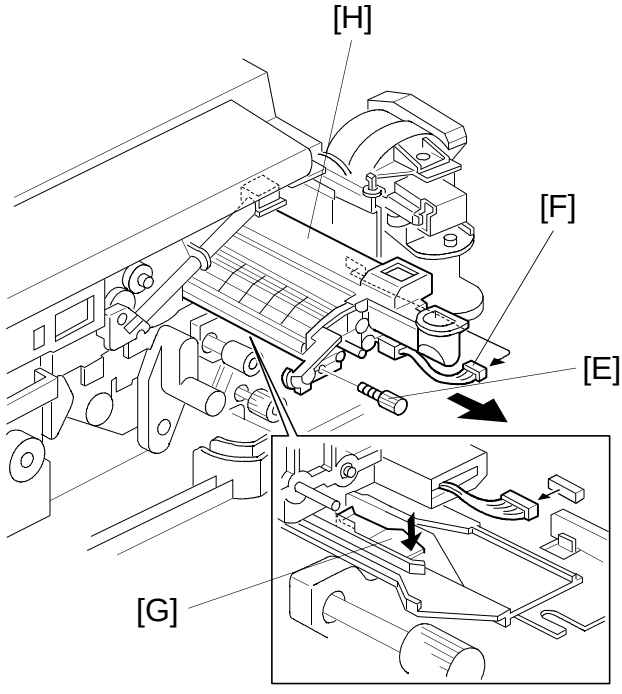

11. Remove the knob screw [A].
12. ① Swing out the bottle holder [B] and ② pull down the lock lever [C]. ③ Then slide out the bottle holder assembly [D] and ④ swing out the bottle holder assembly [D].
13. Remove the knob screw [E] and disconnect the white connector [F].
14. Pull down the development unit lock lever [G] from under the plate and pull out the development unit [H]. Then place it on a clean sheet of paper.

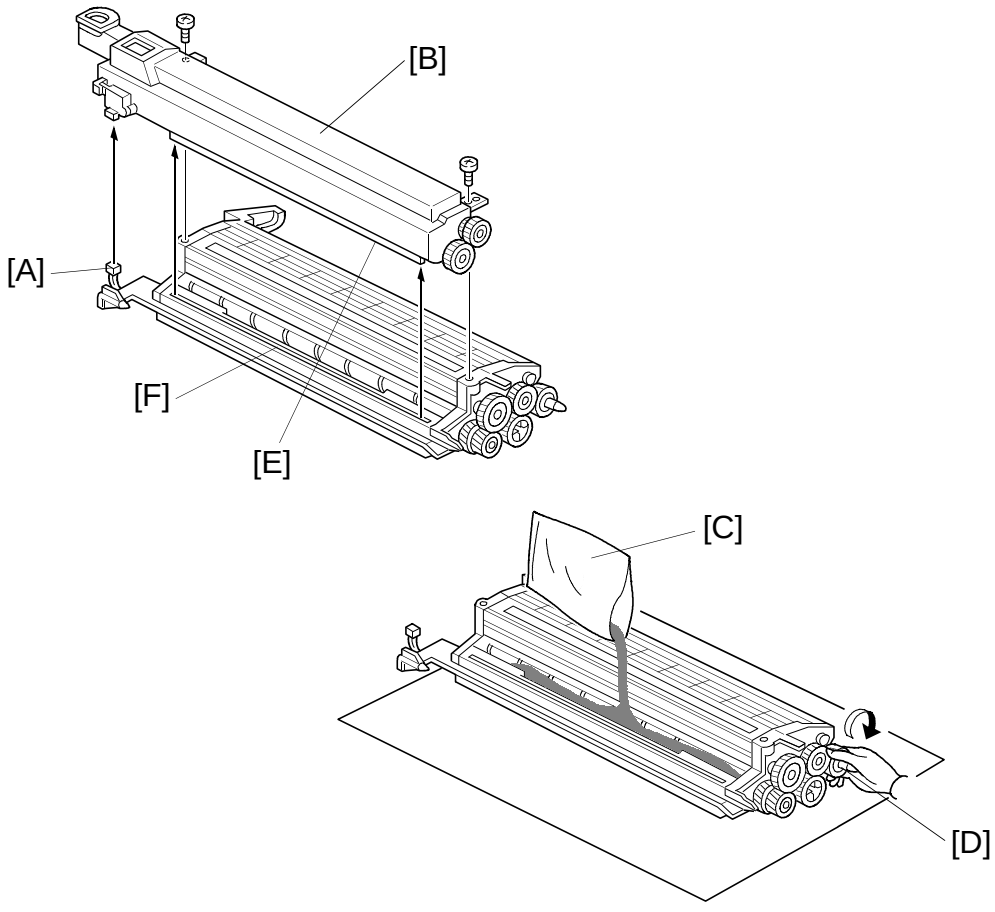

15. Disconnect the connector [A] and separate the toner supply unit [B] from the development unit (2 screws).
16. Pour about half a pack of developer [C] into the development unit. Then rotate the outer gear [D] as shown to distribute the developer evenly. Then pour in all the remaining developer and rotate the gear again.

    NOTE: To prevent the developer from spilling, do not rotate the gears in the other direction.
17. Remount the toner supply unit on the development unit (2 screws) and connect the white connector.

    NOTE: Make sure that the positioning rib [E] sits in the groove [F].
18. Install the development unit in the copier (1 knob screw and 1 connector).

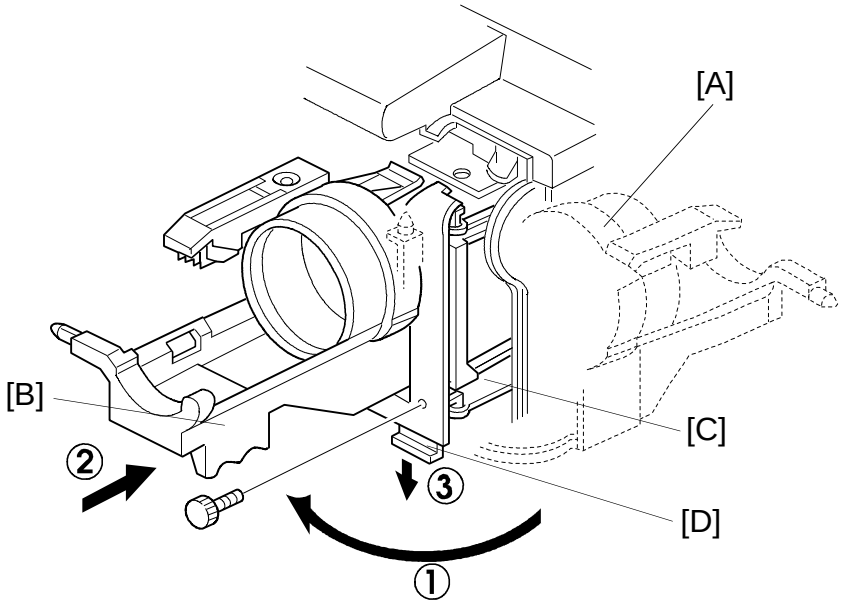

19. Swing in the bottle holder assembly [A] so that the toner bottle holder [B] and the slide rail [C] are **aligned straight**.

    IMPORTANT: Do not swing the bottle holder into the machine before doing step 20.

20. Slide the bottle holder assembly in as described below:
    1) Slide the bottle holder assembly into its lock position while pressing down the bottle holder lock lever [D].
    2) When the bottle holder assembly reaches its lock position, push up the bottle holder lock lever so that the knob screw holes are aligned.
    3) Secure the bottle holder lock lever with the knob screw.

! CAUTION

Do not swing the bottle holder assembly all the way into its original position in the machine without sliding and locking it into position exactly as described above. Otherwise, the assembly will be damaged.

21. Install a toner bottle by following the instructions placed on the reverse side of the front cover.

22. Swing in the toner bottle holder to its original position and close the front cover.

23. Plug in the copier and turn on the main switch.

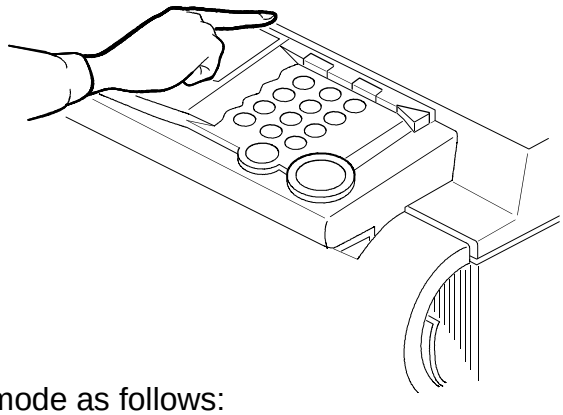

24. Enter SP mode as follows:
    1) Press the "Clear Modes" key.
    2) Enter "107" using the numeric keys.
    3) Hold down the "Clear/Stop" key for more than 3 seconds.

    NOTE: When SP mode is selected, "1" blinks in the 3rd digit of the copy counter, the Auto Image Density indicator starts blinking, and the reduce/enlarge indicator turns off.

25. Perform the "Development unit initial setting" SP mode as follows:
    1) Enter "2" and press the "Enter" key.
    2) Enter "902" and press the "Enter" key.
    3) Press the "Start" key.

    NOTE: 1) This SP mode performs the TD sensor initial setting and then performs the forced toner supply twice.
    2) The machine will automatically stop when Development Unit initial setting is completed. (It takes about 3 minutes.)

26. **A156 copier only:**
    Select the proper language for the guidance display as follows:
    1) Press the "Clear Modes" key twice.
    2) Enter "5" in the 3rd digit of the copy counter and press the "Enter" key.
    3) Enter "910" and press the "Enter" key.
    4) Enter the number for the desired language in the three-digit indicator and press the "Enter" key.
    0:Japanese 1:English 2:French 3:German 4:Italian 5:Spanish 6:Swedish 7:Portuguese 8:Danish 9:Norwegian 10:Finnish 11:Dutch

27. Press the "Clear Modes" key three times to exit SP mode.

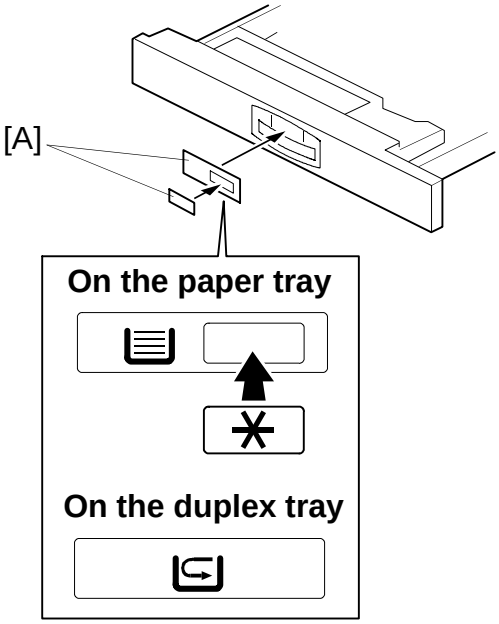

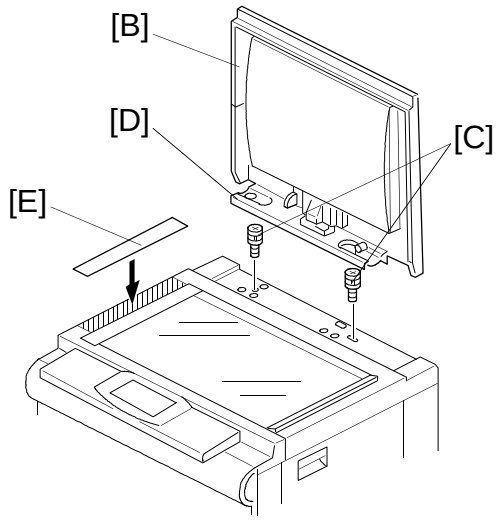

28. Pull out the paper tray and load paper into it. (The paper size and direction for each tray should be as specified by the customer.)

    NOTE: The side and rear fences should be properly positioned.

29. Select the appropriate paper size for the paper trays in the main body by sliding the paper size slider into the correct position (see section 2.3.2 "Paper size selection for the copier paper trays" for details).

30. **When a paper tray unit is installed:** Enter the proper paper size for each paper tray by following the procedure shown in section 2.3, "Paper Size Selection" and in "Service Tables - SP5-019: Paper Size Setting".

31. Load paper into the paper trays and the copy tray.

32. Attach the appropriate paper size decals [A] to the paper trays.
    Also (A156/A160 copiers only), attach the duplex decal to the duplex tray.

    NOTE: Paper size decals are used also for the paper tray unit. Save the remaining decals for use with the paper tray unit.

33. Install the optional platen cover [B] as follows if necessary:
    1) Install 2 stud screws [C] on the top cover as shown.
    2) Position the platen cover bracket [D] on the stud screws and slide it to the left.

34. **All models except the A156:** Attach the symbol explanation decal [E] to the top cover as shown. (If the ARDF will be installed, stick the decal on the ARDF exit cover. Refer to the ARDF installation procedure.)

35. Check the copy quality and machine operation.

2.3 PAPER SIZE SELECTION

2.3.1 Paper Feed Station Definition

A153 and A157 copiers

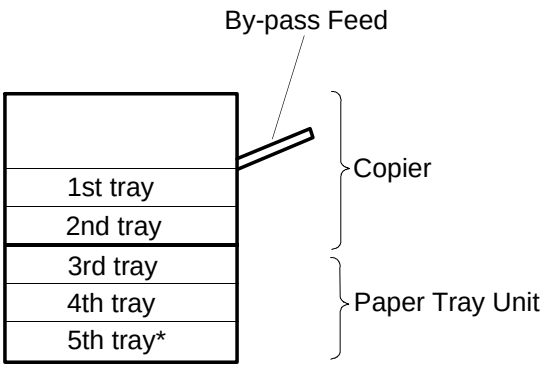

A155 and A159 copiers

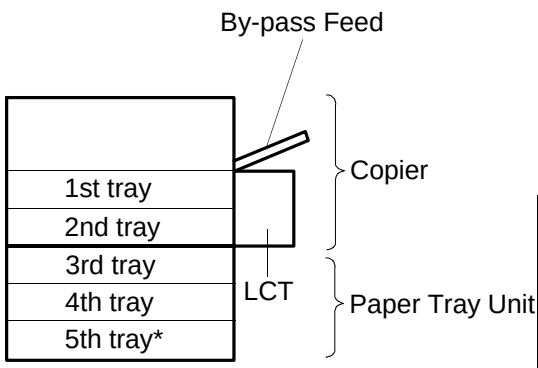

A156 and A160 copiers

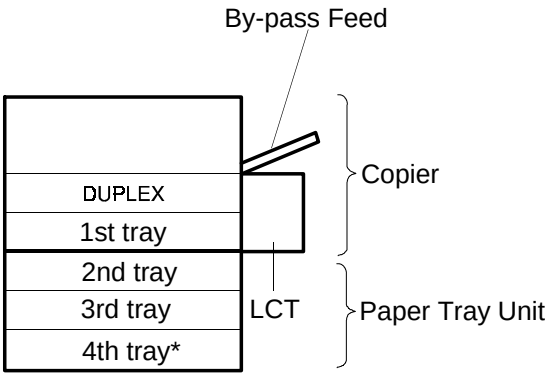

The diagrams on this page show how the paper feed stations are numbered in the various models.

NOTE: *A549 paper tray unit only

2.3.2 Paper Size Selection for Copier Paper Trays

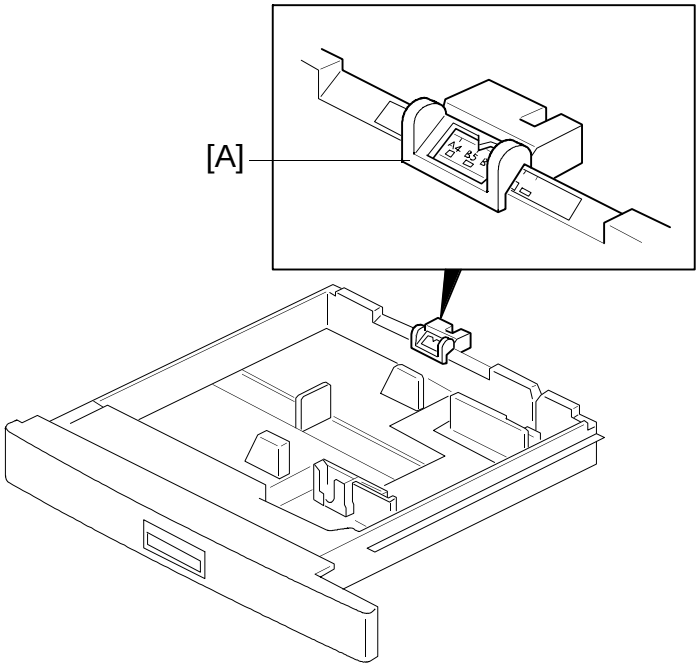

For the 1st tray and 2nd tray for A153, A155, A157, and A159 copiers, and the 1st tray for A156 and A160 copiers, slide the paper size slider [A] to the paper size indication that matches the paper size in the tray. The following paper sizes can be selected with the paper size slider.

A4/A3 Version	LT/DLT Version
A3 (lengthwise)	11" x 17"
B4 (lengthwise)	8 1/2" x 14"
A4 (lengthwise)	8 1/2" x 11"
A4 (sideways)	11" x 8 1/2"
B5 (lengthwise)	A4 (lengthwise)
B5 (sideways)	A4 (sideways)
A5 (sideways)	8 1/2" x 5 1/2"
8 1/2" x 11"	11" x 15"
11" x 8 1/2"	10" x 14"
11" x 17"	F4 (8 1/2" x 13") (lengthwise)
F4 (8 1/2" x 13") (lengthwise)	8" x 10"

NOTE: For the 1st tray, a wider range of paper sizes can be selected with SP mode. See section 2.3.4 and "Service Tables - SP5-019: Paper Size Setting".

2.3.3 Paper Size Selection for the Paper Tray Unit, LCT, and By-pass Feed

For the paper tray unit, LCT and by-pass feed, select the paper size with SP mode (SP5-019) using the following procedure.

1. Enter SP mode as follows;
   1) Press the "Clear Modes" key.
   2) Enter "107" with the numeric keys.
   3) Hold down the "Clear/Stop" key for more than 3 seconds.

   NOTE: When SP mode is selected, "1" blinks in the 3rd digit of the copy counter, the Auto Image Density indicator starts blinking, and the reduce/enlarge indicator turns off.
2. Enter SP5-019 as follows
   1) Enter "5" and press the "Enter" key.
   2) Enter "019" and press the "Enter" key.
3. Press the [+] or [−] key until the required 3rd level program number is selected.

3rd level (001~008 can be selected with the [+] and [−] keys.	A153/A157 copiers		A155/A159 copiers		A156/A160 copiers	
	Paper Tray Indicator	**Paper Size Selection**	**Paper Tray Indicator**	**Paper Size Selection**	**Paper Tray Indicator**	**Paper Size Selection**
SP5-019-001	—	—	—	—	—	—
SP5-019-002	—	—	—	—	▷ 2	2nd Tray
SP5-019-003	▷ 3	3rd Tray	▷ 3	3rd Tray	▷ 3	3rd Tray
SP5-019-004	▷ 4	4th Tray	▷ 4	4th Tray	▷ 4	4th Tray
SP5-019-005	▷ 5	5th Tray	▷ 5	5th Tray		By-pass Feed
SP5-019-006		By-pass Feed		By-pass Feed	▷ T	LCT
SP5-019-007	▷ 1	SPECIAL*	▷ T	LCT	▷ 1	SPECIAL*
SP5-019-008	—	—	▷ 1	*SPECIAL	—	—

Example: In an A155 copier, to select the paper size for the LCT, select 3rd level program 007.

NOTE: The 3rd level program number is blinking in the 1st digit of the copy counter.
Depending on the 3rd level program number, the paper tray indicator changes.
SP settings for each 3rd level program number are blinking in the reduce/enlarge indicator.

*SPECIAL: See section 2.3.4 and "Service Tables - SP5-019: Paper Size Setting" for how to select from a wider range of paper sizes for the 1st tray.

4. Select the required SP setting with the numeric keys (see Service Tables - Paper Size Settings), then press the "Enter" key.

   NOTE: If you input the wrong setting by mistake, you can cancel it by pressing the "Clear/Stop" key before pressing the "Enter" key.

5. Leave SP mode by pressing the "Clear Modes" key three times.

2.3.4 Special Paper Size Selection for the 1st Tray

For the 1st tray, a wider range of paper sizes can be selected using SP5-019-007 for A153, A156, A157 and A160 copiers, or SP5-019-008 for A155 and A159 copiers.

NOTE: The definition of the 1st tray differs with the type of copier. See section 2.3.1 "Paper Feed Station Definition".

If a special paper size is selected, the machine ignores the paper size set with the paper size slider.

See Service Tables - Paper Size Settings for how to select a special paper size using SP5-019.

2.4 SORTER ADAPTER INSTALLATION (OPTION FOR A157, A159, AND A160 COPIERS ONLY)

2.4.1 Accessory Check

Check the quantity and condition of the accessories in the box against the following list.

Description	Qty
1. Installation Procedure	1
2. Sorter Adapter Front Cover	1
3. Clip	3
4. Philips Pan Head Screw M4 x 6	4



2.4.2 Installation Procedure

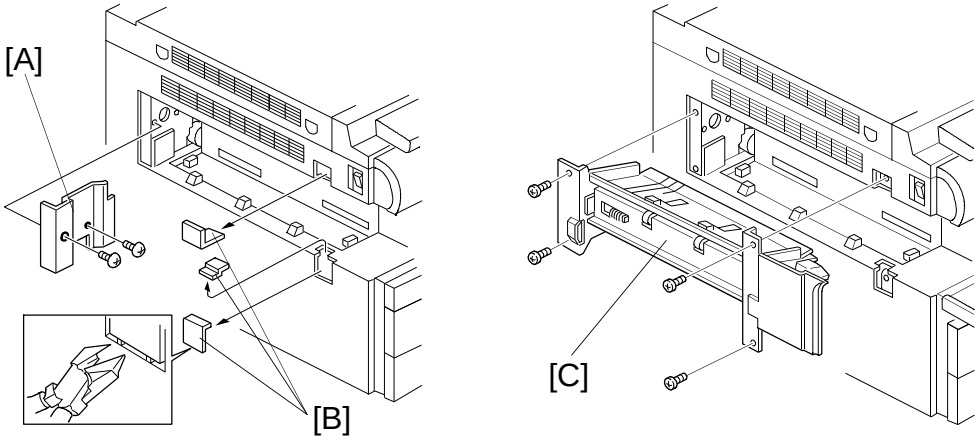

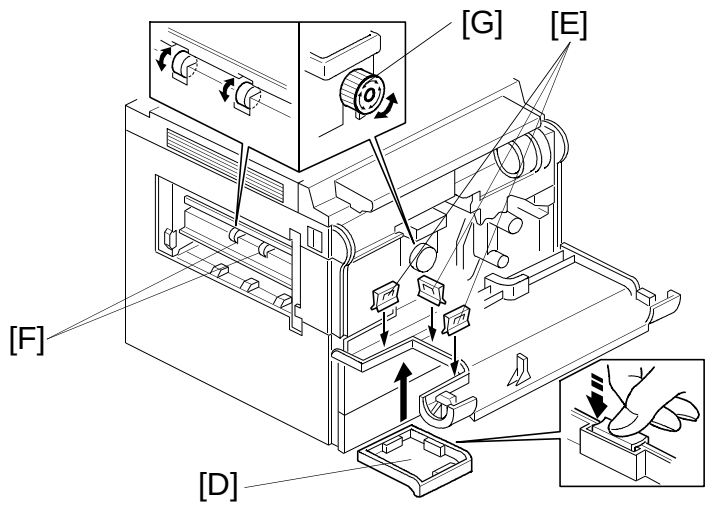

1. Remove the cover plate [A] (2 screws).
2. Remove the three plastic caps [B] from the copier left cover with nippers.
3. Install the sorter adapter [C] (4 tapping screws) in the paper exit section of the copier.
4. Attach the sorter adapter front cover [D] to the copier front cover (3 clips [E]) as shown.

   NOTE: Be sure to push the clips in completely.
5. Check that the rotation of the exit rollers [F] is synchronized with the rotation of the fusing unit knob [G].

2.5 TRAY HEATER INSTALLATION (OPTION)

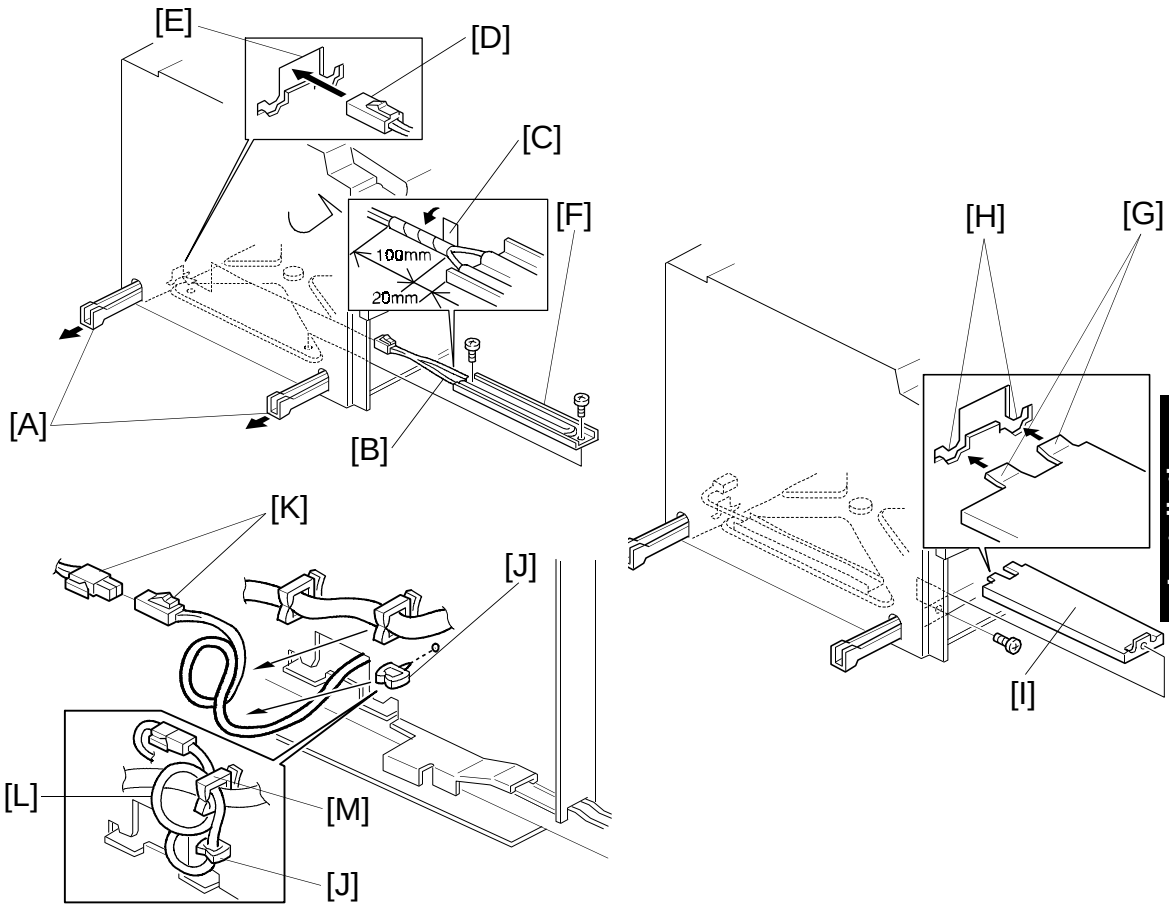

NOTE: The optional tray heater keeps copy paper dry. In humid environments, copy paper may crease as it comes out of the fusing unit. The heater is available as a service part. (See the parts catalog.)

! CAUTION

Unplug the copier power cord before starting the following procedure.

If the 20 bin sorter stapler (A554) has been already installed, do step 1.

1. Remove the 20-bin sorter stapler and the sorter stapler mounting frame from the copier. (See "20-BIN SORTER STAPLER INSTALLATION PROCEDURE".)
2. **A153, A155, A157, and A159 copiers:** Remove the 1st and 2nd paper trays.
3. **A156 and A160 copiers:** Remove the duplex unit and the 1st paper tray.

4. Remove the rear cover. (See "Replacement and Adjustment - Inner and Outer Covers".)
5. Pull out the carrying handles [A].
6. Before installing the heater, bind the heater harness [B] with insulating tape [C] as shown to prevent the heater harness from being damaged by the edge of the copier main frame.
7. Pass the connector [D] through the opening [E] in the copier main frame.
8. Mount the heater [F] on the bottom of the copier main frame (2 screws).
9. Pass the two projections [G] through the opening [H] in the copier main frame, then mount the heater cover [I] on the bottom of the copier main frame (1 screw).

! CAUTION

The heater cover is necessary, because the surface of the heater becomes very hot.

10. Insert the clamp [J] into the rear frame, and join the connectors [K].
11. Clamp the harness [L] to the two clamps [J] and [M] as shown to prevent the harness from touching the carrying handle.

NOTE: Tell the customer that even when the copier main switch is turned off, the copier power cord should be plugged in. Otherwise, the tray heater will not function.

2.6 OPTICS ANTI-CONDENSATION HEATER (OPTION)

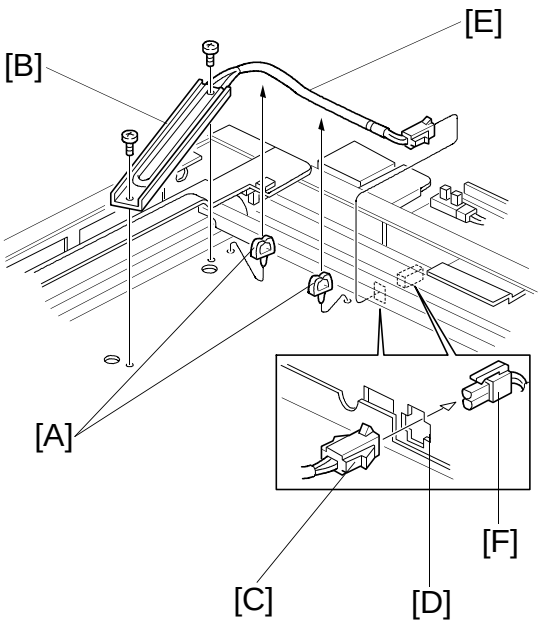

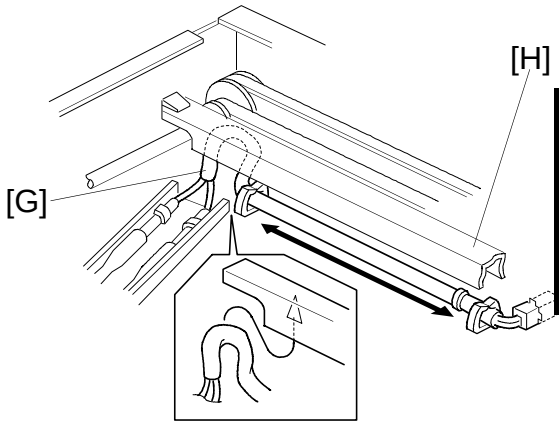

NOTE: The optics anti-condensation heater keeps water from condensing on the copier's mirrors.
Such condensation occurs at cold temperatures with high humidity, and causes the first few copies of the day to be dark, or even black.
The heater is available as a service part. (See the parts catalog.)

! CAUTION

Unplug the copier power cord before starting the following procedure.

1. Remove the exposure glass. (See "Replacement and Adjustment - Exposure Glass Removal".)
2. Remove the rear cover. (See "Replacement and Adjustment - Outer Cover Removal".)
3. Insert the two clamps [A] as shown.
4. Mount the anti-condensation heater [B] (2 screws).
5. Pass the connector [C] through the opening [D].
6. Clamp the harness [E] to the two clamps [A].

7. Connect the **red** two-pin connector [F] at the rear of the copier to the heater's connector [C] (red).
8. Place the harness [G] under the optical rail [H] as shown.
9. Make sure that the scanner drive belt and mirrors do not touch the heater harness while they are functioning. Also, make sure that the heater harness does not interfere with the light path to the ADS sensor board.

NOTE: Tell the customer that even when the copier main switch is turned off, the copier power cord should be plugged in. Otherwise, the optics anti-condensation heater will not function.

2.7 ORIGINAL LENGTH SENSOR FOR APS (OPTION ONLY FOR THE LT/DLT VERSION)

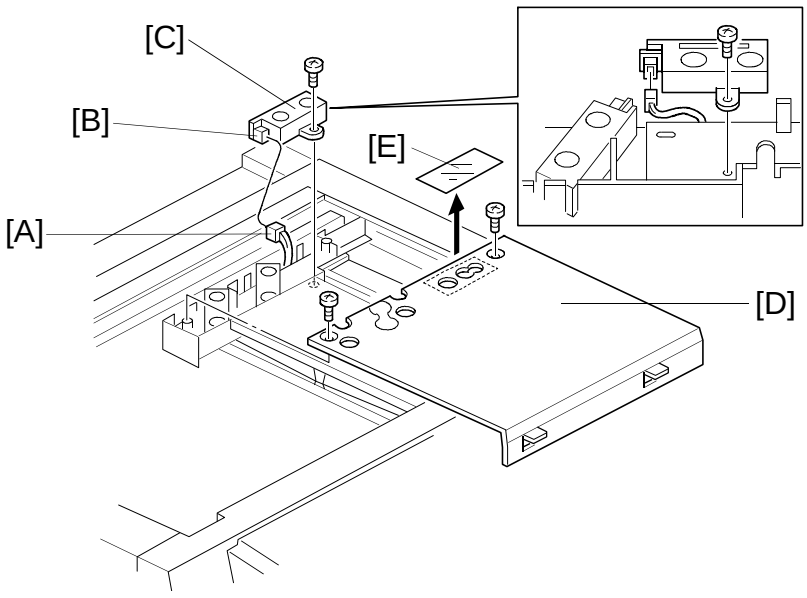

NOTE: To detect 11" x 15" size paper by APS in platen mode, an optional original length sensor is required. The sensor is available as a service part. (See the parts catalog.)

! CAUTION

Unplug the copier power cord before starting the following procedure.

1. Remove the exposure glass. (See "Replacement and Adjustment - Exposure Glass Removal".)
2. Remove the lens housing cover. (See "Replacement and Adjustment - Scanner Drive Belt Replacement".)
3. Pull out the light yellow connector [A] from under the optical rail.
4. Connect the light yellow connector [A] to the connector [B] of the optional sensor [C].
5. Mount the optional sensor [C] as shown (1 tapping screw).
6. Remount the lens housing cover [D] (2 tapping screws), and remove the light shielding mylar [E].
7. Enter SP mode, and input "1" as the SP4-302 setting. (See "Service Tables - Service Program Mode".)

2.8 ADS SENSOR (OPTION)

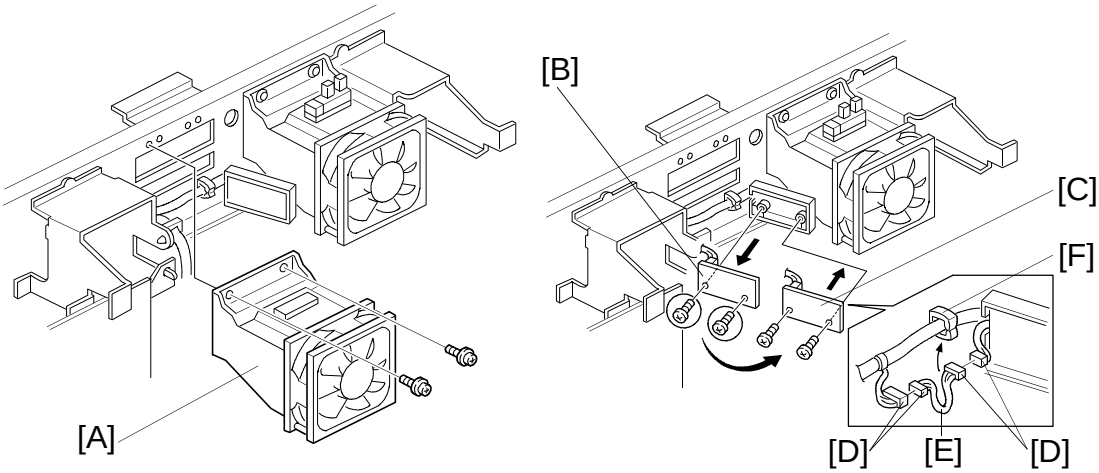

– A153, A155, and A156 copiers only –

NOTE: For originals written on some types of red paper, dirty background may occur in ADS mode. For customers who mainly use such types of red paper originals, an optional ADS sensor which has a different sensitivity for red originals is available as a service part. (See the parts catalog.)

! CAUTION

Unplug the copier power cord before starting the following procedure.

1. **A153, A155, and A156 copiers only:** Remove the top cover. (See "Replacement and Adjustment - Outer Cover Removal".)
2. Remove the rear cover. (See "Replacement and Adjustment - Outer Cover Removal".)
3. **A153, A155, and A156 copiers only:** Remove the optics cooling fan duct [A] (2 tapping screws).
4. Remove the former ADS sensor board [B] (2 tapping screws and 1 connector).
5. Mount the optional ADS sensor board [C] (2 tapping screws) and connect the connectors [D] of the ADS sensor board to the adapter harness [E].
6. Clamp the harness [E] to the clamp [F] as shown.
7. Perform the ADS sensor initial setting with SP4-201. (See "Service Tables - Service Program Mode".)

NOTE: A153, A155, and A156 copiers only: When remounting the optics cooling fan duct [A], be sure not to catch the sensor harness.

2.9 KEY COUNTER HOLDER (OPTION)

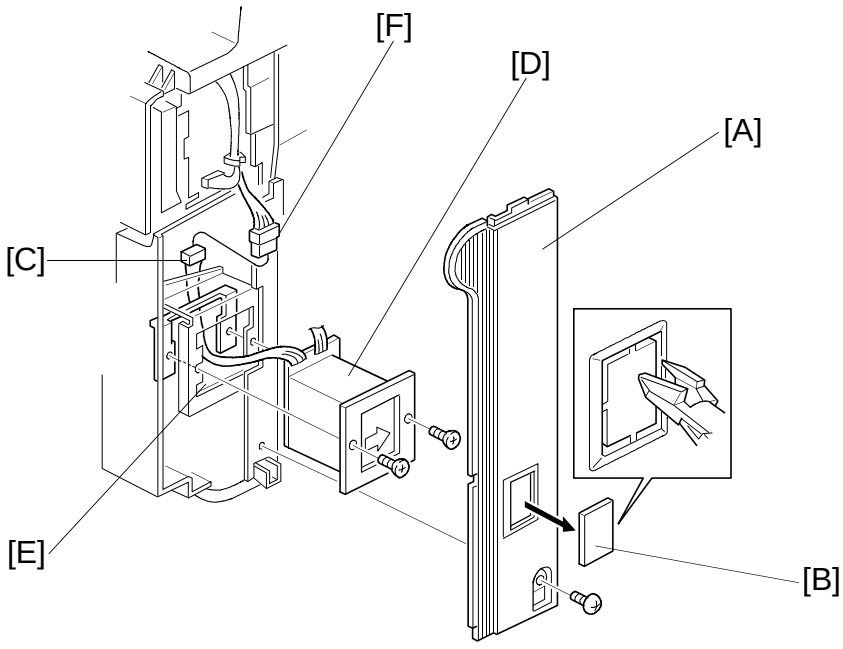

! CAUTION

Unplug the copier power cord before starting the following procedure.

1. Remove the front right cover [A]. (See "Replacement and Adjustment - Outer Cover Removal".)
2. Remove the cap [B] with nippers.
3. Pass the four-pin connector [C] of the key counter holder [D] through the opening [E] and couple it with the key counter connector [F].
4. Mount the key counter holder [D] (2 screws).
5. Reinstall all the covers and check the key counter's operation.
6. Make sure that SP mode 5-401 is set to 0, then switch the power off and cut JP2 on the main board.

2.10 BRAND DECAL APPLICATION INSTRUCTIONS (-10 AND -22 COPIERS ONLY)

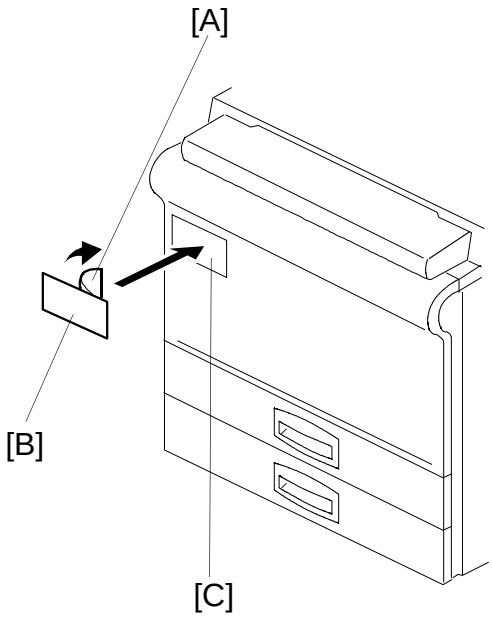

A153, A155, and A156 Copiers

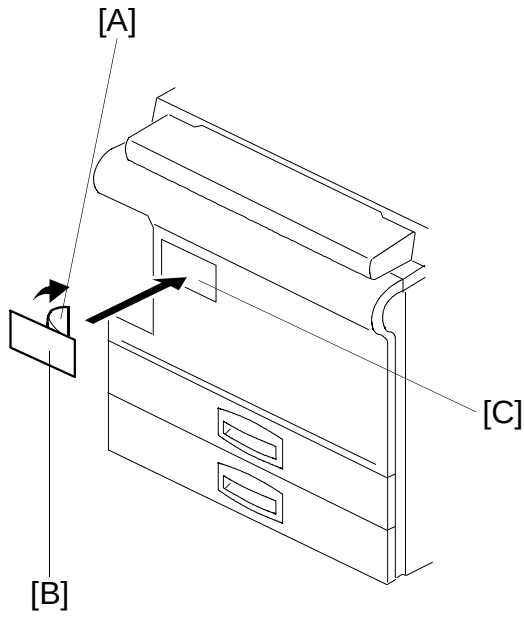

A157, A159, and A160 Copiers

1. Peel off the backing film [A].
2. Attach the brand decal [B] to the indent in the front cover [C] as shown.

SECTION 4

SERVICE TABLES

1. SERVICE REMARKS

1.1 HANDLING THE DRUM

The organic photoconductor (OPC) drum is comparatively more sensitive to light and ammonia gas than a selenium drum.

1. Never expose the drum to direct sunlight.
2. Never touch the drum surface with bare hands. When the drum surface is touched with fingers or becomes dirty, wipe it with a dry cloth or clean it with wet cotton. Wipe with a dry cloth after cleaning with wet cotton.
3. Never use alcohol to clean the drum; alcohol dissolves the drum surface.
4. Store the drum in a cool, dry place away from heat.
5. Take care not to scratch the drum as the photoconductive layer is thin and is easily damaged.
6. Never expose the drum to corrosive gases such as ammonia gas.
7. Always keep the drum in its protective sheet when it is out of the copier. Doing so avoids exposing the drum to bright light or direct sunlight. This will protect the drum from light fatigue.
8. Apply setting powder to the entire surface of the drum before installing a new drum.
9. Process control data initial setting (see section 3.1, "Practical SP Mode Use Tables - Replacement and Cleaning") must be performed when a new drum is installed.

1.2 DRUM UNIT

1. Make sure that the drum unit is set in position and the drum stay is secured with a screw when the main switch is turned on. If the drum unit is loose, poor contact of the drum connectors may cause electrical noise, resulting in unexpected malfunctions (RAM data may change in the worst case).
2. Insert a clean sheet of paper between the drum and the drum charge roller and also cover the OPC drum with paper when you leave the drum unit out of the copier more than 30 minutes. Doing so prevents the drum charge roller from sticking to the drum. If the drum charge roller sticks to the drum, the chemical component of the drum charge roller affects the surface of OPC drum.

1.3 DRUM CHARGE ROLLER

1. Do not touch the drum charge roller with bare hands. Oil stains may cause black bands on copies due to excessive drum charge.
2. Do not adhere toner or setting powder dust to the drum charge roller. Toner stains or setting power may cause white spots or white bands on copies due to insufficient drum charge.
3. Prevent the drum charge roller from being exposed to dusty air. Dust on the drum charge roller may cause white spots on copies due to insufficient drum charge.
4. Never use alcohol or water to clean the drum charge roller. Alcohol or water corrode the surface of the drum charge roller. Wipe with a dry cloth or a Dupont Sontara DY-12 cloth - P/N A1539004.
5. Reduce the drum charge roller cleaning intervals with SP2-901 as follows for users who mainly make high volume copy runs continuously.

SP2-901 setting	Cleaning interval
0	Every 1000 copies for 10 seconds [default]
1	Every 500 copies for 10 seconds
2	Every 200 copies for 10 seconds
3	Every 100 copies for 10 seconds

6. Plug in the copier power cord even when the copier main switch is turned off. While the main switch is turned off, the drum heater must be turned on to keep the temperature around the drum charge roller over 15°C. This prevents the drum charge efficiency from being low for the first copy after the power is switched on.

1.4 OPTICS

1. When installing the exposure glass, make sure that the mark on the edge of the glass faces up. This makes sure that the correct side faces up; this side has a smoother surface and generates less static electricity. This is especially important when the ARDF is installed.
2. When moving the 1st or 2nd scanners, always hold them at the center. Move them slowly, carefully, and gently. Abrupt movement may cause the belt to slip into the wrong position on the scanner drive pulleys.
3. Do not bend or crease the exposure lamp flat cable.
4. Do not touch the following parts with bare hands:
   a) Reflectors
   b) Exposure lamp
   c) Mirrors and lens
   d) ADS and V_L patterns under the left scale bracket
5. To clean the mirrors and lens, use only a clean soft cloth dampened with alcohol or water.
6. The mirror surface with the reflective coating must face the light path. The spring plates must contact the reverse side of the mirror (the side without the reflective coating).
7. If you ever adjust the exposure lamp voltage with SP4-001, be sure to perform auto ADS gain adjustment (SP4-201) and forced V_L detection (SP3-105) immediately afterwards. This is because ADS gain data and V_{REF} data will be cleared if SP4-001 is performed.

1.5 ERASE LAMP

1. A narrower lead edge erase margin increases the possibility of fusing jams. The margin should be at least 1.0 mm.
2. After cleaning the erase lamp unit, rub it lightly with your finger to discharge any static electricity on the surface.

1.6 DEVELOPMENT UNIT

1. Be careful not to nick or scratch the development roller sleeves.
2. Place the development unit on a sheet of paper after removing it from the copier. This prevents any small metal objects (staples, clips, E-rings, etc.) from being attracted to the development roller and getting inside the unit.
3. Clean the drive gears after removing the used developer.
4. Never load different types of developer or toner into the development unit. Doing so will cause poor copy quality and toner scattering inside the copier.
5. TD sensor initial setting (SP2-214) is necessary when new developer is loaded.
   Do not perform the TD sensor initial setting with used developer.
   Do not make any copy before TD sensor initial setting.
6. When removing the development unit, push it to the right to prevent the OPC drum from being scratched by part of the development unit.
7. The doctor gap and the development roller position must not be adjusted in the field as they are precisely adjusted at the factory using special tools. Do not loosen any screws except for those needed when removing the toner supply unit.
8. Before pulling out the development unit, disconnect the connector and release the development unit lock lever.
9. When putting the development unit back in the copier, do not forget to reconnect the connector.

1.7 TRANSFER BELT UNIT

1. Do not touch the transfer belt with bare hands.
2. When servicing the transfer belt cleaning unit, be careful not to damage the edge of the cleaning blade.
3. Apply setting powder to the transfer belt when installing a new transfer belt cleaning blade.
4. Dispose of the used toner inside the collection tank at every preventive maintenance. Never use the toner in the used toner collection tank for toner recycling.
5. Do not bend the bias terminal at the rear side of the transfer belt unit. A bent terminal may cause a bad contact for the transfer charge circuit.

1.8 CLEANING SECTION IN THE DRUM UNIT

1. When servicing the cleaning section, be careful not to damage the edge of the cleaning blade.
2. Apply setting powder to the surface of the drum when installing a new cleaning blade. Otherwise, the cleaning blade catches the drum, and both the cleaning blade and the drum will be damaged.

1.9 ERASE LAMP/PTL/QUENCHING LAMP

1. Place a sheet of paper over the transfer belt unit when removing the erase lamp, the pre-transfer lamp (PTL), or the quenching lamp. Doing so prevents these lamps from damaging the transfer belt if they fall down by mistake.

1.10 PAPER FEED

1. Do not touch the pick-up, feed, separation rollers, or the friction pads with bare hands.
2. The side fences and the rear fence of the paper trays should be positioned correctly in alignment with the actual paper size. Otherwise, paper misfeeds may occur.
3. When using by-pass feed while placing the original directly on the exposure glass, be sure to lower the platen cover or document feeder before pressing the Start key. For the first copy using by-pass feed, the copier scans full size. If the platen cover is opened, a completely black image is developed on the drum outside the copy paper size. This black image is transferred not to the copy paper but to the transfer belt. The toner transferred to the transfer belt cannot be cleaned off completely by the cleaning blade. This may cause the back of the next sheet of copy paper to be dirty.
4. When using by-pass feed, stop pushing the sheets of copy paper at the moment that the paper end indicator turns off. If you do not do so, all the sheets of paper get under the feed roller, causing a jam.
5. **A157, A159, and A160 only:** For users who mainly use B size paper, change the paper feed roller position to the B size paper position when paper jams or non-feeds occur. (See Replacement and Adjustment - Section 6.5 Paper Feed Roller Replacement for A157/A159/A160.) This remark also applies to the A553 paper tray unit.

6. Avoid storing paper in humid areas.
   At high temperature and high humidity, or at low temperature and low humidity, store paper in a plastic bag. This is especially important when a sorter stapler is installed.

7. Load the paper in the paper trays, LCT, and by-pass feed table the correct way up as indicated on the copy paper package.
   If heavy curl occurs with a paper type which has no such indication on the package, try turning the paper stack over. Change the paper if the heavy curl cannot be corrected in spite of this. This is especially important when a sorter stapler is installed.

   NOTE: Proper paper loading is as follows;

   1) For the paper trays of the copier and the paper tray unit, the paper must be copy side down.
   2) For the by-pass feed table and the LCT, the paper must be copy side up.

8. Do not leave paper or originals on top of the LCT. Any paper left there may be fed into the copier and damaged.

1.11 FUSING UNIT

1. Be careful not to damage the edges of the hot roller strippers or their tension springs.

2. Do not touch the fusing lamps with bare hands.

3. Make sure that the fusing lamps are positioned correctly and that they do not touch the inner surface of the hot roller.

1.12 OTHERS

1. Never touch the surface of the RAM back up battery on the main board with screwdrivers or other metallic objects.
   If the battery is short-circuited, RAM data will be destroyed in the worst case.

2. When carrying the copier, never lift it up by holding the LCT. Otherwise, the LCT will be broken. Hold the copier by the carrier handles in the bottom corners.

2. SERVICE PROGRAM MODE

2.1 SERVICE PROGRAM MODE OPERATION

The service program (SP) mode is used to check electrical data, change modes, and adjust settings.

2.1.1 Service Program Mode Access Procedure

How to enter the SP mode

Press the following keys in sequence.



NOTE: 1. The above procedure must be finished within 20 seconds.

2. Hold the final C/ key for more than 3 seconds .
3. When SP mode is selected , "1" blinks in the 3rd digit of the copy counter, the Auto Image Density indicator starts blinking, and the reduce/enlarge indicator turns off.

How to leave the SP mode

Press the key three times,

or turn off the main switch.

NOTE: The above procedure must be finished within 20 seconds.

How to select the program number

Program numbers are composed of two or three levels.



1st Level Program Number	2nd Level Program Number	3rd Level Program Number

To input the required program number, select each program level in sequence.

1. Select the 1st level and 2nd level program numbers at the numeric keys. Then press the R/# key.
2. **If there are third level programs in this SP mode:** Select the 3rd level program number by pressing the + and − keys. The 3rd level program number is displayed in the copy counter. Then press the R/# key.
   If there are no third level programs in this SP mode: Do not press the +, −, or R/# keys at this time.
   Note: If you need to return to one level before, press the C/⊗ key.
3. Input the required setting as explained in the following section.

2.1.2 Changing the Value of an SP Mode

1. Enter the SP mode.
2. Select the required program mode as explained above.
3. The current setting will be displayed in the reduce/enlarge indicator.
4. Enter the required setting using the numeric keys, then press the R/# key. (SP mode numbers and their possible settings are given in the SP mode table.)
5. Leave SP mode.

2.2 MEMORY RESET PROCEDURES

Before starting a memory reset procedure, be sure to remember the following:

For SP3-123, SP7-804, SP7-808, SP7-810, and SP7-811, be sure to check again whether you really wish to use this SP mode before you press the R/# key. If the R/# key is pressed after entering one of these modes, the memory will be reset.

For example, to enter SP Mode 7-804

7 → R/# → 8 0 4 → Check the SP Number again → R/#

2.2.1 Resetting Counters

To reset a counter, use any of the following SP modes.
SP7-804, SP7-810, SP7-811: Before pressing the final R/# key, make sure that this is the SP mode that you really wish to use.

SP Mode Number	Counter to be Reset	To Check the Counter
SP5-404-001	Selected User Code Counter	SP5-402
SP5-404-002	All User Code Counters	
SP7-804	PM Counter	SP7-803
SP7-807-001	Total Service Call Counters	SP7-401 SP7-402
SP7-807-002	Total Copy Paper Misfeed Counters	SP7-502 SP7-504
SP7-807-003	Total Original Misfeed Counters	SP7-503 SP7-505
SP7-810	Copy Counters	SP7-002 SP7-101 SP7-301
SP7-811	DF Original Counter	SP7-205
SP7-816-001	Total sheets of paper fed from the Upper Tray (Except for A156 and A160 copiers)	SP7-204-001
SP7-816-002	Total sheets of paper fed from the Lower Tray	SP7-204-002
SP7-816-003	Total sheets of paper fed from the 1st Tray of the Paper Tray Unit	SP7-204-003
SP7-816-004	Total sheets of paper fed from the 2nd Tray of the Paper Tray Unit	SP7-204-004
SP7-816-005	Total sheets of paper fed from the 3rd Tray of the Paper Tray Unit	SP7-204-005
SP7-816-006	Total sheets of paper fed from the LCT	SP7-204-006
SP7-816-007	Total sheets of paper fed from the By-pass Feed Table	SP7-204-007
SP7-816-008	Total Duplex Paper Feeds	SP7-204-008

1. Enter the required SP mode. **(Do not press R/# after entering this SP mode until you are sure that you want to reset the counters.**)

   NOTE: Before pressing the R/# key, be sure to check again whether you have selected the correct SP mode number or not.

2. Press the R/# key, then the selected counter will be reset.

2.2.2 Reset All Counters: SP7-808

This SP mode resets the following counters:

Counter to be Reset	Counter check
Operation Time	SP7-001
Total Original Scan Counter	SP7-002
Copy Counters by Paper Size	SP7-101
Total Sheets of Paper fed from the Paper Trays	SP7-204
DF Original Counter	SP7-205
Stapler Counter	SP7-206
Reduction/Enlargement/Full Size Copy Counters	SP7-301
Total Service Call Counter	SP7-401
Individual Service Call Counters	SP7-402
Total Jam Counter	SP7-501
Total Copy Jam Counter	SP7-502
Total Original Jam Counter	SP7-503
Copy Jam Counters for Each Location	SP7-504
Original Jam Counters for Each Location	SP7-505
PM Counter	SP7-803

1. Enter SP7-808. **(Do not press the R/# key after entering this SP mode until you are sure that you want to reset the counters.)**

   NOTE: Before pressing the R/# key, be sure to check again whether you wish to reset these counters or not.

2. Press the R/# key. The above counters are all reset.

2.2.3 Drum Initialization: SP3-123

CAUTION: If SP3-123 is performed, the V_R, V_L, and T/H correction levels and the drum rotation timer are reset. As a result, the old drum cannot be used any more.
If the old drum is used after SP3-123 is performed, dirty background and/or toner scattering will appear on copies sooner or later because proper process control will not be applied to the drum.
When installing a new drum, do the following procedure make sure that the machine returns to its normal operating condition.

1. Install a new OPC drum.
2. Clean the optics, sensors, and inside the copier if necessary.
3. Do SP 3-123 as follows.
   3-1. Enter SP3-123. **(Do not press the R/# key after entering this SP mode until you are sure you want to initialize the drum data.)**
   3-2. Press the R/# key. The drum data will be initialized.
4. Perform the following SP modes in the following order (see "Practical SP Mode Use Tables" for details):
   (1) SP3-001: ID Sensor Initial Setting
   (2) SP3-112: Forced V_R Detection
   (3) SP4-001: Exposure Lamp Voltage Adjustment
   (4) SP4-201: Auto ADS Gain Adjustment
   (5) SP3-105: Forced V_L Detection
5. Check the copy quality and the paper path and do any necessary adjustments (see Replacement and Adjustment - Copy Quality Adjustments).

2.2.4 Reset All Memory (SP5-801)

CAUTION: Reset All Memory mode (SP5-801) resets all the correction data for copy process control and all the software counters, and returns all modes and adjustments to the default settings.

Normally, this SP mode should not be performed.
This procedure is required only when replacing the RAM board or when the copier malfunctions due to a damaged RAM board.

- Memory reset procedure -

1. Enter SP5-801.
2. Press the R/# key and the • key at the same time.

   NOTE: To avoid resetting the memory by mistake, this mode is done only when the R/# key and the • key are pressed at the same time.

3. Turn the main switch off and on.

- Recovering the machine after a memory reset -

CAUTION: If SP5-801 is performed, the drum rotation timer for process control and the TD sensor initial setting data are reset. As a result, the old drum and the old developer cannot be used any more. Otherwise, dirty background and/or toner scattering will appear on copies sooner or later because proper process control will not be applied to the drum.
After doing SP5-801, execute the following procedure to return the machine to its normal operating condition.

1. Install a new OPC drum.
2. Install new developer.
3. Clean the optics, sensors, and inside the copier if necessary.

4. Refer to the "SP MODE FACTORY SETTING DATA" sheet located in the upper inner cover and enter the data that were stored in the following SP modes at the factory.
   - SP1-001: Registration Adjustment
   - SP2-001: Drum Charge Roller Voltage (for Copying)
   - SP2-003: Drum Charge Roller Voltage (for V_{SP} Pattern)
   - SP2-101-001: Lead Edge Erase Margin
   - SP4-001: Exposure Lamp Voltage Adjustment
   - SP4-008: Vertical Magnification Adjustment
   - SP4-011-008: Base Horizontal H.P. Adjustment
   - SP4-101: Horizontal Magnification Adjustment
   - SP4-102: Lens Error Correction
   - SP4-103: Focus Adjustment

5. Perform the following SP modes in the following order (see "Practical SP Mode Use Tables" for details):
   (1) SP2-214: TD Sensor Initial Setting
   (2) SP3-123: Drum Initialization
   (3) SP3-001: ID Sensor Initial Setting
   (4) SP3-112: Forced V_R Detection
   (5) SP4-001: Exposure Lamp Voltage Adjustment
   (6) SP4-201: Auto ADS Gain Adjustment
   (7) SP3-105: Forced V_L Detection

6. Check the copy quality and the paper path and do any necessary adjustments (see Replacement and Adjustment - Copy Quality Adjustments).

2.3 SERVICE PROGRAM MODE TABLE

1. A "†" after the mode name means that copies can be made while in this SP mode.
2. A "‡" after the default setting in the "Settings" column means that the actual factory setting for this is written on the data sheet in the front cover.
3. A "°" before the mode number means that this mode can be accessed by sales representatives ([#/Y] → [C/Z] → [#/Y] → [C/Z]).
4. A "•" before the mode number means that this mode can be accessed by users using a UP mode ([#/Y] → [C/Z]). See "UP Mode/SP Mode Cross Reference Table".
5. In the Function column, comments (extra information) are in italics.
6. In the Settings column, the default values are printed in bold letters.
7. "RDS" means Remote Diagnostic System (not available in these models)
   "CSS" means Customer Support System (only available in Japan)
8. Type 1 = A153, A155, and A156 copiers
   Type 2 = A157, A159, and A160 copiers

2.3.1 Quick Reference

The following is a quick reference list of the SP Modes.

Mode No.	Function
Paper Feed/Paper Transport/Fusing	
1-001	Registration †
1-003-xxx	Paper Feed Timing †
1-008	Misfeed Detection †
1-103	Fusing Idling †
°1-104	Fusing Temperature Control †
1-105-xxx	Fusing Temperature Adjustments †
1-106	Fusing Temperature Display †
1-108	Forced Start †
1-902	Jogger Span Adjustment (Side Fence) †
1-905	Jogger Span Adjustment (End Fence) †
Around the Drum	
2-001	Drum Charge Voltage Adjustment (for copying)
2-002-xxx	Drum Charge Voltage Display †
2-003	Drum Charge Voltage Adjustment (for making VSP patterns)
2-101-xxx	Leading/Trailing Edge Erase Margin Adjustment †

Mode No.	Function
2-201-xxx	Development Bias Adjustments †
2-203	Development Bias Adjustment (for making VSP patterns)
2-206-xxx	Development Bias Display †
2-207	Forced Toner Supply (shown as "Compulsory Toner Supply" on the display)
2-208-001	Toner Supply Mode Selection †
2-208-002	Toner Supply Ratio (TD Sensor Supply Mode) †
2-208-003	Toner Supply Ratio (Fixed Supply Mode) †
2-214	TD Sensor Initial Setting
2-215-xxx	TD Sensor Output Display †
2-220	TD Sensor Initial Output Display †
2-222	Toner Supply Ratio (Detect Supply Mode) †
2-301-xxx	Transfer Current Adjustments † Factory Use Only: Do not change the settings.
2-801	Developer Agitation
2-802	Drum Charge Roller Temperature †
2-812	Drum Reverse Rotation Adjustment †
2-901	Drum Charge Roller Cleaning Interval †
2-902	Development Unit Initial Setting
Process Control	
3-001	ID Sensor Initial Setting
3-002	ID Sensor Initial Setting Display †
3-103-xxx	ID Sensor Output Display †
3-105	Forced VL Detection
3-106	Initial VLP/VLG Display †
3-107	Current VLP/VLG Display †
3-111	Current VRP/VRG Display †
3-112	Forced VR Detection
3-123	Drum Initialize
3-801	Auto Process Control Mode Selection †
3-901	Free Run (Exposure Lamp Off)
3-902	Forced Process Control
Optics	
4-001	Exposure Lamp Voltage Adjustment †
°4-002	Exposure Lamp Voltage Display †
4-008	Vertical Magnification Adjustment †
4-011-xxx	Lens Horizontal H.P. Adjustments †
4-013	Scanner Free Run
4-101	Horizontal Magnification Adjustment †
4-102	Lens Error Correction †
4-103	Focus Adjustment †

Mode No.	Function
4-201	Auto ADS Gain Adjustment
4-202	ADS Initial Gain Display †
4-203	ADS Actual Gain Display †
4-301	APS Sensor Function Check †
4-302	Optional APS Sensor **(LT version only)** †
4-303	APS A5/HLT Detection †
4-901	APS Size Priority (for F4 size) †
•°4-902	APS 8K/16K Detection **(A4 versions only)** †
Operation	
•°5-001	All Indicators ON †
•°5-002	Feed Station Priority Selection †
•°5-003	APS Priority Selection †
•°5-004	ADS Priority Selection †
•°5-013	Counter Up/Down Selection †
•°5-017	Maximum Copy Quantity † (Copy Limit)
•°5-019-xxx	Paper Size Set †
•°5-101	Auto Reset Time Setting †
•°5-102	Auto Energy Saver Time Setting †
•°5-103	Auto Tray Shift †
°5-104	A3/DLT Double Count †
•°5-106	Image Density Level Correction (ADS Correction) †
•°5-107-xxx	Image Shift Margin Adjustment †
•°5-108	Edge Erase Margin Adjustment †
•°5-110	Center Erase Margin Adjustment †
°5-113	Coin Lock Installation †
5-115	Duplex Image Shift (Back Side Margin) †
°5-121	T/C (Total Counter) Count Up Timing †
•°5-305	Auto Off Time Setting †
°5-401	User Code Mode †
•°5-402	User Code Counter Check †
•°5-404-xxx	User Code Counter Clear †
•°5-405	User Code Number Setting †
•°5-407-xxx	User Code Number Clear †
°5-408	Number of Registered User Codes Display †
°5-501-001	PM Interval Setting †
°5-501-002	PM Interval Setting (PM Alarm Mode Setting) †
5-504	Used in Japan only. Do not change the factory setting.
5-505	Used in Japan only. Do not change the factory setting.
°5-507	Used in Japan only. Do not change the factory setting.
5-801	Memory All Clear †

Mode No.	Function
5-802-xxx	Free Run Mode
5-803	Input Check Mode †
5-804	Output Check Mode
°5-810	SC Reset †
5-811	Used in Japan only. Do not change the factory setting.
°5-812	Telephone Number Input † **(A156 copier only)**
°5-816	Used in Japan only. Do not change the factory setting.
5-817	Used in Japan only. Do not change the factory setting.
°5-905	APS A4/LT Sideways Priority †
•°5-906	Manual Staple Reset Time Setting †
•°5-907	Cover Mode Selection †
•°5-908	Image Shift/Erase Selection †
•°5-909	10 key Zoom/Size Magnification †
°5-910	Guidance Language Setting **(A156 copier only)** †
Peripherals	
•°6-001	SADF Auto Reset Time Setting †
•°6-002	ADF Free Size Setting †
°6-003	Auto Sort Selection †
°6-005	Blank Copy for Last Odd Originals in Duplex †
6-006-xxx	DF Registration Adjustment †
6-009	DF Free Run with Paper
•°6-010	Auto APS Select (DF) †
•°6-011	Thick/Thin Original Mode Selection †
°6-101	Sorter Installation †
°6-102	Sorter Stack Limit †
°6-104	Staple Sheet Limit †
6-107	Sorter Free Run Mode
Counters	
°7-001	Total Operation Time Display †
°7-002	Total Original Counter Display †
°7-003	Copy Charge Counter for RDS/CSS Display † This is for use with features that are available only in Japan. However, it does show how many originals have been copied (total of DF mode + platen mode).
°7-004	Initial Copy Counter Setting for RDS/CSS Display † This is for use with features that are available only in Japan. However, it does show the total number of copies that have been made.
°7-101-xxx	Total Copies by Paper Size †
°7-203	Drum Counter †
°7-204-xxx	Feed Unit Counter †
°7-205	DF Counter †

Mode No.	Function
°7-206	Stapler Counter †
°7-301-xxx	Total Copies by Magnification †
°7-401	Total Service Call Counter †
°7-402	SC Counter by Service Call †
°7-501	Total Jam Counter † (Copies + Originals)
°7-502	Total Jams by Paper Size † (**Note:** This is actually the Total Copy Paper Jam Counter. The counter is not divided up by Paper Size)
°7-503	Total Original Jam Counter
°7-504-xxx	Total Jams by Location †
°7-505-xxx	Total Original Jams by Location †
°7-801-xxx	Main ROM Version Display †
°7-803	PM Counter Check †
°7-804	PM Counter Clear
°7-807-001	SC Counter Clear †
°7-807-002	Copy Jam Counter Reset †
°7-807-003	Original Jam Counter Reset †
°7-808	Counter All Clear
°7-810	Copy Counter Clear
°7-811	DF Counter Clear
°7-816-xxx	Feed Unit Counter Clear †

2.3.2 SP Mode Table

<table>
<tr><th colspan="2">Mode No.</th><th>Function</th><th>Settings</th></tr>
<tr><td>1-001</td><td>Registration †</td><td>Adjusts leading edge registration.
(0.5 mm per step [range: –8.0 mm to +8.0 mm])</td><td>0 ~ 32
Default = 16 ‡</td></tr>
<tr><td>1-003-001
to
1-003-008</td><td>Paper Feed Timing †</td><td>Adjusts the paper feed timing at registration for each paper feed station. Paper feed timing is in proportion to the amount of paper bending [mm] at registration.
(1 mm per step [range: –16 mm to + 16 mm])
<table>
<tr><th>SP Number</th><th>Without Duplex</th><th>With Duplex</th></tr>
<tr><td>SP1-003-001</td><td>1st tray</td><td>Duplex</td></tr>
<tr><td>SP1-003-002</td><td>2nd tray</td><td>1st tray</td></tr>
<tr><td>SP1-003-003</td><td>3rd tray</td><td>2nd tray</td></tr>
<tr><td>SP1-003-004</td><td>4th tray</td><td>3rd tray</td></tr>
<tr><td>SP1-003-005</td><td>5th tray</td><td>4th tray</td></tr>
<tr><td>SP1-003-006</td><td>By-pass</td><td>By-pass</td></tr>
<tr><td>SP1-003-007</td><td>LCT</td><td>LCT</td></tr>
<tr><td>SP1-003-008</td><td colspan="2">Japan only</td></tr>
</table></td><td>0 ~ 32
Default = 16

SP1-003-008:
Do not adjust this setting.</td></tr>
<tr><td>1-008</td><td>Misfeed Detection †</td><td>Switches misfeed detection on or off for test purposes (sensor signals are ignored). Only one copy can be made at a time, to prevent damage to the machine.</td><td>0: OFF
1: ON</td></tr>
<tr><td>1-103</td><td>Fusing Idling †</td><td>Selects whether fusing idling is done or not. Fusing idling lasts 2 minutes.
After selecting ON or OFF, turn the main switch off and on.</td><td>0: OFF
1: ON</td></tr>
<tr><td>°1-104</td><td>Fusing Temperature Control †</td><td>Selects the fusing lamp temperature control mode.
After selecting the control mode, turn the main switch off and on.</td><td>0: On/Off Control
1: Phase Control</td></tr>
<tr><td>1-105-001</td><td>Fusing Temperature Adjustment (Main Fusing Lamp) †</td><td>Adjusts the temperature of the main fusing lamp, which heats the central area of the hot roller.
The selected temperature is displayed in the reduce/enlarge indicator.
(1°C per step [range: 170°C to 190°C])</td><td>170 ~ 190
Default = 180
(Type 1)
Default = 175
(Type 2)</td></tr>
</table>

Service Tables

<table>
<tr><th colspan="2">Mode No.</th><th>Function</th><th>Settings</th></tr>
<tr><td>1-105-002</td><td>Fusing Temperature Adjustment for Energy Saver Mode †</td><td>Adjusts the temperature of the main and secondary fusing lamps in energy saver mode.
(SP5-102 and SP5-305 are also related to Energy Saver Mode.)

<table><tr><th>SP Data</th><th>Type 1</th><th>Type 2</th></tr><tr><td>0</td><td>175°C</td><td>175°C</td></tr><tr><td>1</td><td>160°C</td><td>150°C</td></tr><tr><td>2</td><td>145°C</td><td>125°C</td></tr><tr><td>3</td><td>130°C</td><td>100°C</td></tr><tr><td>4</td><td>115°C</td><td>75°C</td></tr><tr><td>5</td><td>95°C</td><td>—</td></tr></table>
The lower the fusing temperature is, the greater the energy saving ratio is and the longer the waiting time until the copier returns to the ready condition.</td><td>0 ~ 5
(Type 1)
0 ~ 4
(Type 2)
Default = 0</td></tr>
<tr><td>1-105-003</td><td>Fusing Temperature Adjustment (Secondary Fusing Lamp) †</td><td>Adjusts the temperature of the secondary fusing lamp, which heats both ends of the hot roller.
(1°C per step [range: 160°C to 190°C])</td><td>160 ~ 190
Default = 175</td></tr>
<tr><td>1-106</td><td>Fusing Temperature Display †</td><td>Displays the fusing temperature (°C) on the surface of the central area of the hot roller, as measured by the thermistor.
The temperature in energy saving mode cannot be displayed, as entering SP mode takes the machine out of this mode.</td><td></td></tr>
<tr><td>1-108</td><td>Forced Start †</td><td>Selects whether forced start is on or off.
If forced start is switched on, the copier enters the ready condition even if the fusing temperature has not reached the required value yet. Use this for tests if the room temperature is low and you do not wish to wait for the lamps to warm up.</td><td>0: OFF
1: ON</td></tr>
<tr><td>1-902</td><td>Jogger Span Adjustment (Side Fence) †</td><td>Adjusts the stop position of the jogger side fence span of the duplex unit.
(0.5 mm per step [range: –8.0 mm to +8.0 mm])
A156 and A160 copiers only</td><td>0 ~ 32
Default = 16</td></tr>
<tr><td>1-905</td><td>Jogger Span Adjustment (End Fence) †</td><td>Adjusts the stop position of the jogger end fence span of the duplex unit.
(0.5 mm per step [range: –8.0 mm to +8.0 mm])
A156 and A160 copiers only</td><td>0 ~ 32
Default = 16</td></tr>
</table>

Mode No.		Function	Settings
2-001	Drum Charge Voltage Adjustment (for copying) †	Adjusts the voltage applied to the drum charge roller during copying. *The adjustment factor set with this SP mode is added to the base voltage. (30 V per step [Range: Base voltage - 480 V to Base voltage + 480 V]*	0 - 32 **Default: 16 (0V) ‡**
2-002-001 to 2-002-002	Drum Charge Voltage Display †	Displays the voltage applied to the drum charge roller. SP2-002-001: For copying SP2-002-002: For making VSP patterns *The first three digits are displayed in the reduce/enlarge indicator. The actual value is the displayed value x (–10) V. Just after the main switch is turned on, the initial setting voltage is displayed. After one or more copies, the actual applied voltage (including the process control corrections) is displayed.*	
2-003	Drum Charge Voltage Adjustment (for making VSP patterns) †	Adjusts the voltage applied to the drum charge roller when making VSP patterns. *The adjustment factor set with this SP mode is added to the base voltage. (10 V per step [Range: Base voltage –160 V to Base voltage + 160 V]*	0 - 32 **Default: 16 (0V) ‡**
2-101-001 to 2-101-002	Leading/Trailing Edge Erase Margin Adjustment †	Adjusts the leading and trailing edge erase margins. SP2-101-001: Leading edge erase margin SP2-101-002: Trailing edge erase margin *(0.5 mm per step [range: 0.0 mm to +16.0 mm])*	0 - 32 **Default = 16** ‡ (only 2-101-001 is on the data sheet)
2-201-001	Development Bias Adjustment (for copying) †	Adjusts the development bias for copying to make copies lighter or darker in general. *The adjustment factor set with this SP mode is applied to the base voltage. (20 V per step [Range: Base voltage –80 V to Base voltage +80 V])*	1 - 9 **Default = 5 (0V)** 1: Darkest 9: Lightest
2-201-002	Lightest ID Level Development Bias Adjustment †	Adjusts the development bias for manual ID level 7. *The adjustment factor set with this SP mode is applied to the base voltage when ID level 7 is selected.*	**1: –40 V** 2: ±0 V 3: –80 V 4: –120 V
2-203	Development Bias Adjustment (for making VSP patterns) †	Adjusts the development bias for making VSP patterns *The adjustment factor set with this SP mode is added to the base voltage. (20 V per step [Range: Base voltage - 10 V to Base voltage + 80 V]*	1 - 10 **Default = 6 (0V)**

Mode No.		Function	Settings
2-206-001 to 2-206-002	Development Bias Display †	Displays the development bias. SP2-206-001: Development bias used for copying. SP2-206-002: Development bias used for making VSP sensor patterns. *The first two digits are displayed in the reduce/enlarge indicator. The actual value is: displayed value x (–10) V. All process control corrections are included in the displayed value.*	
2-207	Forced Toner Supply (shown as "Compulsory Toner Supply" on the display)	Forces the toner bottle to supply toner to the toner supply unit for 30 seconds. *This mode is started by pressing the "Start" key and stops automatically after about 30 seconds. Press the"Clear Modes" key to interrupt if necessary. This SP mode must be performed twice when installing the machine and when installing a new toner supply unit.*	
2-208-001	Toner Supply Mode Selection †	Selects the toner supply mode. In many cases, the machine will change the toner supply mode automatically if either the TD or ID sensor become unreliable. However, sometimes it does not. If the TD sensor fails, you can select fixed supply mode as a temporary measure. If the ID sensor fails, you can select TD sensor supply mode. After repairing the machine, check whether the toner supply mode has gone back to the detect supply mode.	1: TD sensor supply mode 2: Fixed supply mode **3: Detect supply mode**
2-208-002	Toner Supply Ratio (TD Sensor Supply Mode) †	Selects the toner supply ratio for TD sensor supply mode. For example, if the user normally makes copies of originals that are about 7% black, select the 7% setting for best results.	1: 7% **2: 15%** 3: 30% 4: 60%
2-208-003	Toner Supply Ratio (Fixed Supply Mode) †	Selects the toner supply ratio for Fixed Supply Mode. For example, if the user normally makes copies of originals that are about 6% black, select the 6% setting for best results.	1: 2% 2: 4% **3: 6%** 4: 11%

Mode No.		Function	Settings
2-214	TD Sensor Initial Setting	Performs the TD sensor initial setting. This SP mode controls the voltage applied to the TD sensor to make the TD sensor output 2.5 ± 0.1 V. After using SP2-214, check SP2-220 to see if the sensor is working correctly. *This mode is started by pressing the Start key and stops automatically after about 2.5 minutes. Use this mode only after adding new developer.*	
2-215-001 to 2-215-002	TD Sensor Output Display †	Displays the TD sensor output voltage. SP2-215-001: V_T = Current TD sensor output SP2-215-002: V_{TREF} = Reference TD sensor output	
2-220	TD Sensor Initial Output Display †	Displays the TD sensor initial setting output (after doing SP2-214). *Normally, 2.5 ± 0.1 V is displayed. [Range: 0 V to 5.0 V] If it is not, the sensor may be defective.*	
2-222	Toner Supply Ratio (Detect Supply Mode) †	Selects the toner supply ratio for detect supply mode. For example, if the user normally makes copies of originals that are about 7% black, select the 7% setting for best results.	1: 7% **2: 15%** 3: 30% 4: 60%
2-301-001 to 2-301-002	Transfer Current Adjustments † Factory Use Only: Do not change the settings.		0 ~ 32 **14 (–30 μA): Type 1** **12 (–20 μA): Type 2**
2-801	Developer Agitation	After the Start key is pressed, the developer is agitated. To stop, press the "Clear Stop" key. *Use this SP mode if the machine has not been used for a long time.*	
2-802	Drum Charge Roller Temperature †	Displays the drum charge roller temperature [0 ~ 60°C].	
2-812	Drum Reverse Rotation Adjustment †	Adjusts the amount of the time for the drum reverse rotation after each copy job. *If paper dust remains on the drum, it may get into the recycled toner. If this is happening, increase the reverse rotation by increasing the value of the setting.*	0 ~ 32 **Default = 16 (about 3 mm)**

Service Tables

Mode No.		Function	Settings
2-901	Drum Charge Roller Cleaning Interval †	Selects the drum charge roller cleaning interval. Turn the copier main switch off and on after changing the setting. *The drum charge roller is cleaned briefly at the end of each copy job. The drum charge roller is also cleaned for 10 seconds after the interval selected with this SP mode.*	**0: Every 1000 copies** 1: Every 500 copies 2: Every 200 copies 3: Every 100 copies
2-902	Development Unit Initial Setting	Performs TD sensor initial setting and then performs forced toner supply twice. To start this SP mode, press the "Start" key. This SP mode has the same effect as doing SP2-214 then doing SP2-207 twice. **This SP mode must be done only at copier installation.** This SP mode takes totally about 3 minutes.	
3-001	ID Sensor Initial Setting	Performs the ID sensor initial setting. ID sensor output for the bare area of the drum (V_{SG}) is adjusted to 4.0 ± 0.2 V. *To start this SP mode, press the "Start" key.*	
3-002	ID Sensor Initial Setting Display †	Displays the initial setting value of the ID sensor. *Normally 4.0 ± 0.2 V is displayed. If the ID sensor cannot be adjusted to 4.0 ± 0.2 V, the ID sensor or the OPC drum should be cleaned.*	
3-103-001 to 3-103-002	ID Sensor Output Display †	Displays the ID sensor outputs. SP3-103-001: V_{SP} SP3-103-002: V_{SG} *Normally, V_{SP} = 0.01 ~ 2.50 V, V_{SG} = 4.0 ± 0.2 V ($V_{SP}/V_{SG} \approx 0.1$)*	
3-105	Forced V_L Detection	After the "Start" key is pressed, the initial V_{LP}/V_{LG} (= V_{REF}) is determined. *For when to use this SP mode, see "Practical SP Mode Use Table".*	
3-106	Initial V_{LP}/V_{LG} Display †	Displays the initial V_{LP}/V_{LG} value determined by SP3-105.	
3-107	Current V_{LP}/V_{LG} Display †	Displays the current V_{LP}/V_{LG} value [%]. *This is the value currently being used for V_L correction.*	
3-111	Current V_{RP}/V_{RG} Display †	Displays the current V_{RP}/V_{RG} value [%] *This is the value currently being used for V_R correction.*	

Mode No.		Function	Settings
3-112	Forced V_R Detection	After the "Start" key is pressed, forced V_R detection is done. *For when to use this SP mode, see "Practical SP Mode Use Table".*	
3-123	Drum Initialize	This resets the following data regarding the OPC drum: 1. V_R correction level 2. V_L correction level 3. OPC counter 4. T/H correction level ***This SP mode must be used only when a new drum is installed.*** *Refer to "Practical SP Mode Use Table" for the exact timing for using this SP mode.*	
3-801	Auto Process Control Mode Selection †	Selects whether auto process control mode is on or off. If the auto process control mode is switched off, V_R correction, V_L correction, and the 1000-copy process control cycle will not be performed. *This SP mode can be used to help determine whether a copy quality problem is caused by process control or by the machine itself.*	0: OFF **1: ON**
3-901	Free Run (Exposure Lamp Off)	Performs a free run with the exposure lamp off. *Start the free run by pressing the "Start" key and stop it by pressing the "Clear/Stop" key.* ***Be sure to perform this mode without a development unit, or too much toner will be consumed from the developer, causing low image density.***	
3-902	Forced Process Control	Performs the 1000-copy process control cycles forcibly. V_{SG} initial adjustment → V_R detection → V_L detection → V_{ADS} (pattern) adjustment *This mode starts after the "Start" key is pressed.*	
4-001	Exposure Lamp Voltage Adjustment †	Adjusts the exposure lamp voltage (0.5 V per step [Range: 50.0 V to 75.0 V]) *For 115 V machines, the actual applied voltage = displayed value x 1.1412.* ***After doing this SP mode, ADS initial setting (SP4-201) and forced V_L detection (SP3-105) must also be done.*** *See "Replacement and Adjustment - Copy Quality Adjustments" for how to adjust.*	50.0 ~ 75.0 V **Default = 63 V ‡**

<table>
<tr><th colspan="2">Mode No.</th><th>Function</th><th>Settings</th></tr>
<tr><td>°4-002</td><td>Exposure Lamp Voltage Display †</td><td>Displays the current exposure lamp voltage.
(0.5 V per step [Range: 50.0 V to 85.0 V])
For 115 V machines, the actual applied voltage = displayed value x 1.1412.</td><td>50.0 ~ 85.0 V</td></tr>
<tr><td>4-008</td><td>Vertical Magnification Adjustment †</td><td>Adjusts the magnification in the paper travel direction.
(0.1% per step [Range: –1.6% to +1.6%])
See "Replacement and Adjustment - Copy Quality Adjustments" for how to adjust.</td><td>0 ~ 32 V
Default = 16 ‡</td></tr>
<tr><td>4-011-001 to 4-011-009</td><td>Lens Horizontal H.P. Adjustment †</td><td>Adjusts the lens horizontal home position for each paper feed station.
(0.2 mm per step [Range: –3.2 mm to +3.2 mm])
<table>
<tr><th>SP Number</th><th>Without Duplex</th><th>With Duplex</th></tr>
<tr><td>4-011-001</td><td>1st tray</td><td>Duplex</td></tr>
<tr><td>4-011-002</td><td>2nd tray</td><td>1st tray</td></tr>
<tr><td>4-011-003</td><td>3rd tray</td><td>2nd tray</td></tr>
<tr><td>4-011-004</td><td>4th tray</td><td>3rd tray</td></tr>
<tr><td>4-011-005</td><td>5th tray</td><td>4th tray</td></tr>
<tr><td>4-011-006</td><td>By-pass</td><td>By-pass</td></tr>
<tr><td>4-011-007</td><td>LCT</td><td>LCT</td></tr>
<tr><td>4-011-008</td><td colspan="2">Base Adjustment</td></tr>
<tr><td>4-011-009</td><td>ADF</td><td>ADF</td></tr>
</table>
SP4-011-008 changes the home position for all paper feed stations at the same time. It is mainly used for making factory adjustments. If it is shifted by a certain amount, all other SP4-011 adjustments move by the same amount.
See "Replacement and Adjustment - Copy Quality Adjustments" , and "Side-to-side Registration" in the ARDF manual for details on how to adjust.</td><td>0 ~ 32 V
Default = 16
‡ (only 4-011-008 is on the data sheet)</td></tr>
<tr><td>4-013</td><td>Scanner Free Run</td><td>Starts the scanner free run.
Start the scanner free run by pressing the "Start" key, and stop it by pressing "Clear/Stop".</td><td></td></tr>
<tr><td>4-101</td><td>Horizontal Magnification Adjustment †</td><td>Adjusts the magnification perpendicular to the direction of paper travel.
(0.2% per step [Range: –1.6% to +1.6%])
See "Replacement and Adjustment - Copy Quality Adjustments" for how to adjust.</td><td>0 ~ 32
Default =16 ‡</td></tr>
</table>

<table>
<tr><th colspan="2">Mode No.</th><th>Function</th><th>Settings</th></tr>
<tr><td>4-102</td><td>Lens Error Correction †</td><td>Adjusts the lens position to correct for magnification in enlarge/reduce mode. (0.1% per step [Range: –0.8% to +0.8%])</td><td>0 ~ 16
Default: 8 (0%) ‡</td></tr>
<tr><td>4-103</td><td>Focus Adjustment †</td><td>Adjusts the 3rd mirror position to correct the fine focus.
(0.05 mm per step [Range: left 3.75 mm to right 3.75 mm])
See "Replacement and Adjustment - Copy Quality Adjustments" for how to adjust.</td><td>0 ~ 150
Default = 75 ‡</td></tr>
<tr><td>4-201</td><td>Auto ADS Gain Adjustment</td><td>Adjusts the ADS gain automatically to make the sensor output 2.7 ± 0.1 V.
Close the platen cover to prevent external light from reaching the ADS sensor. Then press the "Start" key to make the adjustment.</td><td></td></tr>
<tr><td>4-202</td><td>ADS Initial Gain Display †</td><td>Displays the ADS sensor output adjusted by SP4-201.</td><td></td></tr>
<tr><td>4-203</td><td>ADS Actual Gain Display †</td><td>Displays the current ADS sensor output.</td><td></td></tr>
<tr><td>4-301</td><td>APS Sensor Function Check †</td><td>Check the APS sensors.
If they are working correctly, the following value is displayed in the reduce/enlarge indicator.
<table>
<tr><th rowspan="2"></th><th colspan="2">LT Version</th><th rowspan="2">A4 Version</th></tr>
<tr><th>Without optional APS</th><th>With optional APS</th></tr>
<tr><td>ADF/Platen Open</td><td>0</td><td>0</td><td>0</td></tr>
<tr><td>ADF/Platen Closed</td><td>95</td><td>127</td><td>95</td></tr>
</table></td><td>LT version:
0 or 95 (without optional APS)
0 or 127 (with optional APS)
A4 version:
0 or 95</td></tr>
<tr><td>4-302</td><td>Optional APS Sensor †
(LT version only)</td><td>Set this to 1 when installing the optional APS sensor.
This SP mode is effective only for the LT version. In the A4 version, even if "1" is selected, the setting is ignored.</td><td>0: Not installed
1: Installed</td></tr>
<tr><td>4-303</td><td>APS A5/HLT Detection †</td><td>Selects whether A5/HLT forced detection is done or not.
If "YES" is selected, paper sizes that cannot be detected by the APS sensors are regarded as A5 lengthwise (for A4 models) or 5 1/2" x 8 1/2" (for LT models). If "NO" is selected, "Check Paper Size" will be displayed.</td><td>0: NO
1: YES</td></tr>
</table>

<table>
<tr><th colspan="2">Mode No.</th><th>Function</th><th>Settings</th></tr>
<tr><td>4-901</td><td>APS Size Priority (for F4 size) †</td><td>Selects which copy paper size the machine selects when the APS sensors detect F4 lengthwise (8 1/2" x 13").</td><td>0: 8 1/2" x 13"
1: 8" x 13"
2: 8 1/4" x 13"</td></tr>
<tr><td>•°4-902</td><td>APS 8K/16K Detection †
(A4 versions only)</td><td>Selects whether the machine can select 8K/16K copy paper based on APS sensor readings.
If "YES" is selected, 8K/16K copy paper is selected under the following conditions:<table><tr><th>Size detected by APS</th><th>Selected copy paper size</th></tr><tr><td>B4 lengthwise</td><td>8K lengthwise (267 mm x 390 mm)</td></tr><tr><td>A4 lengthwise</td><td>16K lengthwise (267 mm x 195 mm)</td></tr><tr><td>B5 sideways</td><td>16K sideways (115 mm x 267 mm)</td></tr></table></td><td>0: NO
1: YES</td></tr>
<tr><td>•°5-001</td><td>All Indicators ON †</td><td>Turns on all indicators on the operation panel.</td><td></td></tr>
<tr><td>•°5-002</td><td>Feed Station Priority Selection †</td><td>Selects the paper feed station priority.<table><tr><th>Setting</th><th>Non duplex machines</th><th>Duplex machines</th></tr><tr><td>1</td><td>1st Tray</td><td>1st Tray</td></tr><tr><td>2</td><td>2nd Tray</td><td>2nd Tray</td></tr><tr><td>3</td><td>3rd Tray</td><td>3rd Tray</td></tr><tr><td>4</td><td>4th Tray</td><td>4th Tray</td></tr><tr><td>5</td><td>5th Tray</td><td>LCT</td></tr><tr><td>6</td><td>LCT</td><td>—</td></tr></table></td><td>1 ~ 6: Non duplex machines
1 ~ 5: Duplex machines
Default = 1
(without LCT)
Default = LCT (5 or 6)
(with LCT)</td></tr>
<tr><td>•°5-003</td><td>APS Priority Selection †</td><td>Specifies whether the copier defaults to APS or manual mode when the main switch is turned on, auto reset, or mode cleared.</td><td>1: APS
2: Manual
Also see SP6-010.</td></tr>
<tr><td>•°5-004</td><td>ADS Priority Selection †</td><td>Specifies whether the copier defaults to ADS or manual ID mode when the main switch is turned on, auto reset, or mode cleared.</td><td>1: ADS
2: Manual</td></tr>
<tr><td>•°5-013</td><td>Counter Up/Down Selection †</td><td>Selects whether the counter counts up or down.</td><td>1: Up
2: Down</td></tr>
<tr><td>•°5-017</td><td>Maximum Copy Quantity †
(Copy Limit)</td><td>Limits the maximum copy quantity that can be entered.</td><td>1 ~ 999
Default = 999</td></tr>
<tr><td>•°5-019-001 to 5-019-008</td><td>Paper Size Set †</td><td>Sets the paper size for each paper tray and feed station.</td><td>For how to input the settings, see section 2.7.</td></tr>
</table>

Mode No.		Function	Settings
•°5-101	Auto Reset Time Setting †	Inputs the auto reset time after the copier enters standby, or disables auto reset. *(1 second per step [Range: 1 ~ 999])* *If "0" is selected, auto reset is disabled.*	0 ~ 999 **Default = 60**
•°5-102	Auto Energy Saver Time Setting †	Sets the time that the machine enters energy saver mode after entering the ready condition, or disables energy saver mode. *(1 second per step [Range: 1 ~ 999])* *If "0" is selected, the energy saver mode is disabled.*	0 ~ 999 **Default = 60**
•°5-103	Auto Tray Shift †	Selects whether auto tray shift is on or off.	0: OFF **1: ON**
°5-104	A3/DLT Double Count †	Specifies whether the counter is doubled for A3/DLT paper. *If "ON" is selected, the total counter and the current user code counter counts up twice when A3/DLT copy paper is used.*	**0: OFF** 1: ON
•°5-106	Image Density Level Correction (ADS Correction) †	Selects the image density level correction. *The development bias voltage correction in ADS mode depends on this setting (see "ADS Correction" in the Process Control section for details).*	0: Dark **1: Normal** 2: Light
•°5-107-001 to 5-107-002	Image Shift Margin Adjustment †	This controls the margin width adjustment for the Left and Right margin adjustment keys. SP5-107-001: Left SP5-107-002: Right *SP5-908 must be at 2 for this to have any effect; this changes the function of the Erase key to a Margin Adjustment key.* *(A4 version: 1 mm per step [Range: 0 mm to 15 mm],* *LT version: 0.01" per step [Range: 0" to 0.60"])*	**A4 version** 0 ~ 15 **Default = 5** **LT version** 0 ~ 0.60 **Default = 0.20**
•°5-108	Edge Erase Margin Adjustment †	Adjusts the edge erase margin width in erase edge mode. *SP5-908 must be at 1 for this to have any effect. A strip of the selected width will be erased around the edges of the copy image.*	**A4 version** 1: 5 mm **2: 10 mm** **LT version** 1: 0.20" **2: 0.40"**

Mode No.		Function	Settings
•°5-110	Center Erase Margin Adjustment †	Adjusts the center erase margin width in erase center mode. *SP5-908 must be at 1 for this to have any effect.* *(A4 version: 1 mm per step [Range: 8 mm to 25 mm],* *LT version: 0.01" per step [Range: 0.32" ~ 1.00"])*	**A4 version** 8 ~ 25 **Default = 20** **LT version** 0.32 ~ 1.00 **Default = 0.80**
°5-113	Coin Lock Installation †	Specifies whether coin lock is installed or not (only for Japanese versions).	**0: Not installed** 1: Installed
5-115	Duplex Image Shift † (Back Side Margin)	Specifies whether duplex image shift (back side margin) is used or not. *If "YES" is selected, a 5 mm margin is made on the right of the reverse side of copies when making two-sided copies from one-sided originals.* *If the image shift mode has been selected with SP5-908 and if the user uses image shift mode, this SP mode has no effect.*	0: NO **1: YES**
°5-121	T/C (Total Counter) Count Up Timing †	Determines whether the total counter counts up at paper feed or at paper exit.	**0: Feed** 1: Exit
•°5-305	Auto Off Time Setting †	Sets the time to go into the auto off condition. If "0" is selected, the auto off feature is disabled. *(1 minute per step [Range: 1 minute to 999 minutes])* *In the auto off condition, no power is applied to the fusing unit.* *If any keys are pressed, any doors are opened, or the auto response sensor detects the operator, the auto off condition is canceled.* *SP 1-105-002 is also related to Energy Saver Mode.*	0 ~ 999 **Default = 0**
°5-401	User Code Mode †	After JP2 on the main board is cut, either key counter mode or user code mode can be selected with this SP mode.	**0: Key Counter** 1: User Code
•°5-402	User Code Counter Check †	Displays the user code counters. *The current user code is displayed in copy counter, and the copy count for that user code is displayed in the reduce/enlarge indicator. Hold down the "•" key to display the last three digits.* *Use the [+] and [−] keys to check each user code counter.*	

Mode No.		Function	Settings
•°5-404-001 to 5-404-002	User Code Counter Clear †	Resets the user code counters. SP5-404-001: Resets the counter for the user code that is now displayed in the reduce/enlarge indicator. SP5-404-002: Resets all the UC counters. To reset the counter(s), press R/# .	
		SP5-404-001: The user code must be input at the numeric keys before it can be displayed and the counter reset, so you must know what user codes are in use. Take a look with SP5-405.	
•°5-405	User Code Number Setting †	Use this mode to input the user code numbers (max. 3 digits).	1 ~ 999 (max. 50 codes)
		Up to 50 user codes can be set. To input a code, enter it at the numeric keys then press the R/# key. Then you can input another. To check the user codes input so far, use the + and − keys. The user codes input will be displayed in reduce/enlarge counter.	
•°5-407-001 to 5-407-002	User Code Number Clear †	Deletes user code numbers. SP5-404-001: Deletes individual user code numbers. Enter the required user code at the numeric keys, then press the R/# key. (To see which user codes are being used, use SP5-405.) SP5-404-002: Deletes all the user code numbers.	
°5-408	Number of Registered User Codes Display †	Displays the number of registered user codes in the reduce/enlarge indicator.	
°5-501-001	PM Interval Setting †	Sets the PM interval. (1000 copies per step [Range: 1 to 999])	1 ~ 999 **120: Type 1** **100: Type 2**
°5-501-002	PM Interval Setting (PM Alarm Mode Setting) †	Specifies whether PM alarm mode is on or off.	**0: OFF** 1: ON
		If PM alarm mode is on, the manual ID level/ADS indicator and copy counter blink when the PM counter reaches the PM interval.	
5-504	RDS/CSS Alarm Level for Paper Jam (Paper Jam Alarm Level Setting) † Used in Japan only. Do not change the factory setting.		
5-505	RDS/CSS Alarm Level for SC (Service Call Alarm Level Setting) † Used in Japan only. Do not change the factory setting.		
°5-507	RDS/CSS Alarm Level for Supplies (Supply Alarm Mode Setting) † Used in Japan only. Do not change the factory setting.		

Mode No.		Function	Settings
5-801	Memory All Clear †	Resets all the correction data for process control and all software counters, and returns all modes and adjustments to the default settings. See Service Tables - section 2.2.4 for how to perform this SP mode.	
		Normally, this SP mode should not be performed. *This SP mode is required only when replacing the RAM board, or when the copier malfunctions due to a damaged RAM board.*	
5-802-001 to 5-802-002	Free Run Mode	Performs the free run SP5-802-001: Continuous free run SP5-802-002: One time free run	
		Before starting, close the platen or ARDF. Press the "Start" key to start the free run. Press the "Clear/Stop" key to stop the free run.	
5-803	Input Check Mode †	Displays the data received from sensors and switches.	For details, see Service Tables section 2-5.
5-804	Output Check Mode	Turns on the electrical components individually for test purposes.	For details, see Service Tables - section 2-6.
°5-810	SC Reset †	Resets any service call condition that was caused by a level A error (see the Troubleshooting section). After doing SP5-810, turn the copier main switch off and on.	
5-811	Machine Serial No. Input † For use with features that are available in Japan only		
°5-812	Telephone Number Input † **(A156 copier only)**	Use this to input the telephone number of the service representative (this is displayed when a service call condition occurs.) Maximum 16 digits. Press the "•" key to input a pause (–). Press the "Clear/mode" key to delete the input telephone number.	
°5-816	RDS/CSS Function Setting † For use in Japan only. Do not change the factory setting.		
5-817	Repair Time Transmission † For use in Japan only. Do not change the factory setting.		

Mode No.		Function	Settings
°5-905	APS A4/LT Sideways Priority †	Specifies whether the machine selects LT sideways paper if the original is A4. If "ON" is selected, LT sideways copy paper is selected automatically when the APS sensors detect an A4 sideways original. This feature does not work in reverse (A4 sideways paper is not selected for an LT sideways original).	**0: OFF** 1: ON
•°5-906	Manual Staple Reset Time Setting †	Sets the manual staple reset time. (1 second per step [Range: 1 to 999]) *After the end of a copy job in sort mode, manual staple mode is reset automatically when the manual staple reset time has passed.*	1 ~ 999 **Default = 20 s**
•°5-907	Cover Mode Selection †	Use to select whether to have a front cover or both front and back covers added to copies in cover mode. Copy paper for the cover pages should be placed on the by-pass feed table.	1: Front/Back **2: Front**
•°5-908	Image Shift/Erase Selection †	Selects whether to have an image shift mode or an image erase mode.	**1: Erase mode** 2: Shift mode
•°5-909	10 key Zoom/Size Magnification †	Selects whether to have a 10 key zoom function or a size magnification function.	**1: Size magnification** 2: 10 key zoom function
°5-910	Guidance Language Setting † **(A156 copier only)**	Selects the language used on the operation panel display (except for SP mode guidance).	1: English 2: French 3: German 4: Italian 5: Spanish 6: Swedish 7: Portuguese 8: Danish 9: Norwegian 10: Finnish 11: Dutch
•°6-001	SADF Auto Reset Time Setting †	Sets the auto reset time for SADF mode. (1 second per step [range: 1 to 99 seconds])	1 ~ 99 **Default = 5**



Mode No.		Function	Settings
•°6-002	ADF Free Size Setting †	Specifies whether ADF free size setting is on or off. *Switch this on if the user makes copies of originals that contain paper of different sizes. Advise users that skew may occur if the papers are of different widths, so for example, put the A4 pages sideways if accompanied by A3 pages.* *If this feature is switched on, the copying speed will be reduced.*	**0: OFF** 1: ON
°6-003	Auto Sort Selection †	Specifies whether auto sort mode is on or off. In auto sort mode, when two or more originals are placed on the ADF, sort mode is selected if the copy quantity is between 2 and 20.	**0: OFF** 1: ON
°6-005	Blank Copy for Last Odd Originals in Duplex †	Specifies whether a blank copy is added after the last page for an odd number of originals in duplex mode. *In SADF or platen mode, the last page always stays in the duplex unit, regardless of this setting.*	0: Not added (the last page stays in the duplex unit) **1: Added**
6-006-001 to 6-006-002	DF Registration Adjustment †	Adjusts the registration of the document feeder. SP6-006-001: One-sided original SP6-006-002: Two-sided original *(0.3 mm per step [Range: –4.8 mm to +4.8 mm])* *See "Vertical Registration" in the ARDF manual for details on how to use these adjustments.*	0 ~ 32 **Default = 16**
6-009	DF Free Run with Paper	To start the DF free run, put some sheets of paper on the ARDF then press the "Start" key. Stop the free run by pressing "Clear/Stop". *This is a general free run controlled from the copier. For more detailed free run modes, see the manual for the DF.*	
•°6-010	Auto APS Select (DF) †	Selects whether auto APS mode is used with the DF or not. *If "ON" is selected, APS mode is selected automatically when an original is placed on the DF. This SP mode is in effect only when the APS priority (SP5-003) is set to Manual.*	0: OFF **1: ON**
•°6-011	Thick/Thin Original Mode Selection †	Selects the original feed type for the DF. In thin mode, originals will not be pushed back against the left scale.	**0: Thick mode** 1: Thin mode

Mode No.		Function	Settings
°6-101	Sorter Installation †	Use this to specify which sorter is installed.	**0: No sorter** 1: A557 sorter 2: A556 sorter 3: Not used 4: A568 sorter adapter only
		After setting this SP mode, the copier main switch must be turned off and on. For the A554 and A555 sorter stapler, the setting does not have to be changed (keep it at 0).	
°6-102	Sorter Stack Limit †	Select which sorter stack limit to use.	0: OFF **1: ON**
		OFF: Sorting and stacking can be done until the sorter' tray cannot take any more paper. Then copying stops and the R indicator lights. *ON: Sorting and stacking can be done until the following limit is reached. Then copying stops and the R indicator lights.* **A554 Sorter/Stapler** Sort Mode: 30 (A4/LT), 15 (B4/LG, A3/DLT) Stack Mode: 15 (A4/LT, B4/LG, A3/DLT) **A555 Sorter/Stapler** Sort Mode: 30 (A4/LT), 25 (B4/LG, A3/DLT) Stack Mode: 25 (A4/LT), 20 (B4/LG, A3/DLT) **A556 Sorter** Sort Mode: 30 (A4/LT), 15 (B4/LG), 10 (A3/DLT) Stack Mode: 30 (A4/LT), 10 (B4/LG, A3/DLT) **A557 Sorter** Sort or Stack Mode: 20 (A4/LT), 15 (B4/LG), 10 (A3/DLT)	
°6-104	Staple Sheet Limit †	Select whether there is a stapling limit for the sorter stapler.	0: OFF **1: ON**
		OFF: Copies of up to 25 pages can be stapled for all paper sizes. *ON: The staple indicator will go out after the following limit number of pages has been stacked and stapling will not be done even if the user selects stapling mode.* **A554 Sorter/Stapler:** 20 (A4 - B5/LT) , 10 (A3 - B4 / DLT - LG) **A555 Sorter/Stapler:** 20 (A4 - B5/LT, A3 - B4 / DLT - LG)	
6-107	Sorter Free Run Mode	Start the sorter free run by pressing the "Start" key. Stop it by pressing the "Clear/Stop" key.	
		This is a general free run controlled from the copier. For more detailed free run modes, see the sorter manuals.	
°7-001	Total Operation Time Display †	Displays the total operation time (hours).	
		The first three digits are displayed in the reduce/enlarge indicator. Hold down the "•" key to display the last three digits.	

<table>
<tr><th colspan="2">Mode No.</th><th>Function</th><th>Settings</th></tr>
<tr><td>°7-002</td><td>Total Original Counter Display †</td><td>Displays the total number of scanned originals (DF + platen).
The first three digits are displayed in the reduce/enlarge indicator. Hold down the "•" key to display the last three digits.</td><td></td></tr>
<tr><td>°7-003</td><td colspan="3">Copy Charge Counter for RDS/CSS Display †
This is for use with features that are available only in Japan. However, it does show how many originals have been copied (total of DF mode + platen mode). The 4th ~ 6th digits are displayed in the reduce/enlarge indicator. Hold down the "0" key to display the 7th digit, and hold down the "•" key to display the 3rd ~ 1st digits.</td></tr>
<tr><td>°7-004</td><td colspan="3">Initial Copy Counter Setting for RDS/CSS Display †
This is for use with features that are available only in Japan. However, it does show the total number of copies that have been made.
The 4th ~ 6th digits are displayed in the reduce/enlarge indicator. Hold down the "0" key to display the 7th digit, and hold down the "•" key to display the 3rd ~ 1st digits.</td></tr>
<tr><td>°7-101-001 to 7-101-005</td><td>Total Copies by Paper Size †</td><td>Displays the total number of copies by paper size.
<table>
<tr><th>SP Number</th><th>A4 Version</th><th>LT Version</th></tr>
<tr><td>SP7-101-001</td><td>A3</td><td>DLT</td></tr>
<tr><td>SP7-101-002</td><td>B4</td><td>LG</td></tr>
<tr><td>SP7-101-003</td><td>A4</td><td>LT</td></tr>
<tr><td>SP7-101-004</td><td>A5</td><td>HLT</td></tr>
<tr><td>SP7-101-005</td><td>Others</td><td>Others</td></tr>
</table>
The first three digits are displayed in the reduce/enlarge indicator. Hold down the "•" key to display the last three digits.</td><td></td></tr>
<tr><td>°7-203</td><td>Drum Counter †</td><td>Displays the drum rotation time (hours).
The first three digits are displayed in the reduce/enlarge indicator. Hold down the "•" key to display the last three digits.</td><td></td></tr>
</table>

<table>
<tr><th colspan="2">Mode No.</th><th>Function</th><th>Settings</th></tr>
<tr><td>°7-204-001
to
7-204-008</td><td>Feed Unit Counter †</td><td>Displays the total number of copies fed from each feed unit.
<table><tr><th>SP Number</th><th>Without Duplex</th><th>With Duplex</th></tr><tr><td>SP7-204-001</td><td>1st tray</td><td>—</td></tr><tr><td>SP7-204-002</td><td>2nd tray</td><td>1st tray</td></tr><tr><td>SP7-204-003</td><td>3rd tray</td><td>2nd tray</td></tr><tr><td>SP7-204-004</td><td>4th tray</td><td>3rd tray</td></tr><tr><td>SP7-204-005</td><td>5th tray</td><td>4th tray</td></tr><tr><td>SP7-204-006</td><td>LCT</td><td>LCT</td></tr><tr><td>SP7-204-007</td><td>By-pass</td><td>By-pass</td></tr><tr><td>SP7-204-008</td><td>—</td><td>Duplex</td></tr></table>
The first three digits are displayed in the reduce/enlarge indicator. Hold down the "." key to display the last three digits.</td><td></td></tr>
<tr><td>°7-205</td><td>DF Counter †</td><td>Displays the total number of originals fed by the DF.
The first three digits are displayed in the reduce/enlarge indicator. Hold down the "." key to display the last three digits.</td><td></td></tr>
<tr><td>°7-206</td><td>Stapler Counter †</td><td>Displays the total number of stapling runs.
The first three digits are displayed in the reduce/enlarge indicator. Hold down the "." key to display the last three digits.</td><td></td></tr>
<tr><td>°7-301-001
to
7-301-003</td><td>Total Copies by Magnification †</td><td>Displays the following counters:
7-301-001: Copies made in full size mode
7-301-002: Copies made with reduction
7-301-003: Copies made with enlargement
The first three digits are displayed in the reduce/enlarge indicator. Hold down the "." key to display the last three digits.</td><td></td></tr>
<tr><td>°7-401</td><td>Total Service Call Counter †</td><td>Displays the total number of service calls that have occurred.</td><td></td></tr>
<tr><td>°7-402</td><td>SC Counter by Service Call †</td><td>Displays the service call counters for each service call code.
The service call code is displayed in the copy counter indicator, and the number of times this SC code has occurred is displayed in reduce/enlarge indicator.
By pressing the [+] and [−] keys, another service call number and its counter can be displayed.</td><td></td></tr>
</table>

<table>
<tr><th colspan="2">Mode No.</th><th>Function</th><th>Settings</th></tr>
<tr><td>°7-501</td><td>Total Jam Counter † (Copies + Originals)</td><td>Displays the total number of copy jams plus original jams (max. 4 digits).
The first digit is displayed in the reduce/enlarge indicator. Hold down the "." key to display the last three digits.</td><td></td></tr>
<tr><td>°7-502</td><td>Total Jams by Paper Size † (Note: This is actually the Total Copy Paper Jam Counter. The counter is not divided up by Paper Size)</td><td>Displays the total copy paper jam counter (max. 4 digits).
The first digit is displayed in the reduce/enlarge indicator. Hold down the "." key to display the last three digits.</td><td></td></tr>
<tr><td>°7-503</td><td>Total Original Jam Counter</td><td>Displays the total original jam counter (max. 4 digits).
The first digit is displayed in the reduce/enlarge indicator. Hold down the "." key to display the last three digits.</td><td></td></tr>
<tr><td>°7-504-001 to 7-504-006</td><td>Total Jams by Location †</td><td>Displays the total copy paper jam counts by location (max. 4 digits).
<table>
<tr><th>SP Number</th><th>Paper Jam Location Symbol</th></tr>
<tr><td>SP7-504-001</td><td>Y</td></tr>
<tr><td>SP7-504-002</td><td>A</td></tr>
<tr><td>SP7-504-003</td><td>B</td></tr>
<tr><td>SP7-504-004</td><td>C</td></tr>
<tr><td>SP7-504-005</td><td>Z</td></tr>
<tr><td>SP7-504-006</td><td>R</td></tr>
</table>
The first one digit is displayed in the reduce/enlarge indicator. Hold down the "." key to display the last three digits.</td><td></td></tr>
<tr><td>°7-505-001 to 7-505-002</td><td>Total Original Jams by Location †</td><td>Displays the total original jams in the DF by location (max. 4 digits).
SP7-505-001: Feed-in section
SP7-505-002: Feed-out section
The first digit is displayed in the reduce/enlarge indicator. Hold down the "." key to display the last three digits.</td><td></td></tr>
</table>

<table>
<tr><th colspan="2">Mode No.</th><th>Function</th><th>Settings</th></tr>
<tr><td>°7-801-001
to
7-801-004</td><td>Main ROM Version Display †</td><td>Displays the main ROM version.
SP7-801-001: Copier main ROM version
SP7-801-002: Paper tray unit main ROM version
SP7-801-003: DF main ROM version
SP7-801-004: Sorter stapler main ROM version

The ROM version is displayed by a six-digit number. The first three digits are displayed in the reduce/enlarge indicator. Hold down the "." key to display the last three digits. The six-digit number shows the ROM version as follows.
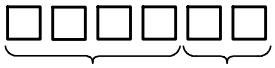
Last four digits of ROM P/No. Suffix of ROM P/No.

<table>
<tr><th>Last two digits</th><th>Suffix</th><th>Last two digits</th><th>Suffix</th></tr>
<tr><td>00</td><td>No suffix</td><td>13</td><td>M</td></tr>
<tr><td>01</td><td>A</td><td>14</td><td>N</td></tr>
<tr><td>02</td><td>B</td><td>16</td><td>P</td></tr>
<tr><td>03</td><td>C</td><td>17</td><td>Q</td></tr>
<tr><td>04</td><td>D</td><td>18</td><td>R</td></tr>
<tr><td>05</td><td>E</td><td>19</td><td>S</td></tr>
<tr><td>06</td><td>F</td><td>20</td><td>T</td></tr>
<tr><td>07</td><td>G</td><td>22</td><td>V</td></tr>
<tr><td>08</td><td>H</td><td>23</td><td>W</td></tr>
<tr><td>10</td><td>J</td><td>24</td><td>X</td></tr>
<tr><td>11</td><td>K</td><td>25</td><td>Y</td></tr>
<tr><td>12</td><td>L</td><td>26</td><td>Z</td></tr>
</table>

Note: 09, 15, 21 do not exist because suffixes I, O, and U are not used.</td><td></td></tr>
<tr><td>°7-803</td><td>PM Counter Check †</td><td>Displays the PM counter after the last PM (max. 6 digits).

The first three digits are displayed in the reduce/enlarge indicator; hold down the "." key to display the last three digits.</td><td></td></tr>
<tr><td>°7-804</td><td>PM Counter Clear</td><td>Resets the PM counter.

The counter will be reset when you press the final R/# key when entering this SP mode.</td><td></td></tr>
</table>

Service Tables

<table>
<tr><th colspan="2">Mode No.</th><th>Function</th><th>Settings</th></tr>
<tr><td>°7-807-001</td><td>SC Counter Clear †</td><td>Resets the total SC counter (SP7-401) and the individual counters for each type of Service Call (SP7-402).

To reset the counters, press the R/# key.</td><td></td></tr>
<tr><td>°7-807-002</td><td>Copy Jam Counter Reset †
(displayed as "SC Counter Clear")</td><td>Resets the total copy jam counter (SP7-502) and the copy jam counters for individual locations (SP7-504).

To reset the counters, press the R/# key.</td><td></td></tr>
<tr><td>°7-807-003</td><td>Original Jam Counter Reset †
(displayed as "SC Counter Clear")</td><td>Resets the total original jam counter (SP7-503) and the original jam counters for individual locations (SP7-505).

To reset the counters, press the R/# key.</td><td></td></tr>
<tr><td>°7-808</td><td>Counter All Clear</td><td>Resets the following counters.
<table>
<tr><th>Counters that are reset</th><th>Counter check</th></tr>
<tr><td>Operation Time</td><td>SP7-001</td></tr>
<tr><td>Scanning Counter</td><td>SP7-002</td></tr>
<tr><td>Copy Counter</td><td>SP7-101</td></tr>
<tr><td>Total Sheets of Paper Fed from the Paper Tray</td><td>SP7-204</td></tr>
<tr><td>DF Originals Counter</td><td>SP7-205</td></tr>
<tr><td>Stapler Counter</td><td>SP7-206</td></tr>
<tr><td>Reduction/Enlargement Counter</td><td>SP7-301</td></tr>
<tr><td>Total Service Call Counter</td><td>SP7-401</td></tr>
<tr><td>Each Service Call Counter</td><td>SP7-402</td></tr>
<tr><td>Jam Total Counter</td><td>SP7-501</td></tr>
<tr><td>Copy Paper Jam Total Counter</td><td>SP7-502</td></tr>
<tr><td>Original Jam Total Counter</td><td>SP7-503</td></tr>
<tr><td>Total Counter of Copy Paper Jams for Each location</td><td>SP7-504</td></tr>
<tr><td>Total Counter of Original Paper Jams for Each location</td><td>SP7-505</td></tr>
<tr><td>PM Counter</td><td>SP7-803</td></tr>
</table>
After pressing the final R/# key when entering this SP mode, the counters will be reset.</td><td></td></tr>
</table>

<table>
<tr><th colspan="2">Mode No.</th><th>Function</th><th>Settings</th></tr>
<tr><td>°7-810</td><td>Copy Counter Clear</td><td>Resets the following counters.
• Total Original Counter (SP7-002)
• Total Copies by Paper Size (SP7-101)
• Total Copies by Magnification (SP7-301)

After pressing the final [R/#] key when entering this SP mode, the counters will be reset.</td><td></td></tr>
<tr><td>°7-811</td><td>DF Counter Clear</td><td>Resets the DF counter (SP7-205).

After pressing the final [R/#] key when entering this SP mode, the counter will be reset.</td><td></td></tr>
<tr><td>°7-816-001 to 7-816-008</td><td>Feed Unit Counter Clear †</td><td>Reset one of the following counters by pressing the [R/#] key.

<table>
<tr><th>SP Number</th><th>Without Duplex</th><th>With Duplex</th></tr>
<tr><td>SP7-816-001</td><td>1st tray</td><td>—</td></tr>
<tr><td>SP7-816-002</td><td>2nd tray</td><td>1st tray</td></tr>
<tr><td>SP7-816-003</td><td>3rd tray</td><td>2nd tray</td></tr>
<tr><td>SP7-816-004</td><td>4th tray</td><td>3rd tray</td></tr>
<tr><td>SP7-816-005</td><td>5th tray</td><td>4th tray</td></tr>
<tr><td>SP7-816-006</td><td>LCT</td><td>LCT</td></tr>
<tr><td>SP7-816-007</td><td>By-pass</td><td>By-pass</td></tr>
<tr><td>SP7-816-008</td><td>—</td><td>Duplex</td></tr>
</table></td><td></td></tr>
</table>

2.4 UP MODE AND SP MODE CROSS REFERENCE TABLE

UP Mode	SP Mode	Function
1	5-019	Paper Size Set
2	5-002	Feed Station Priority Selection
3	5-003	APS Priority Selection
4	6-010	Auto APS Select (DF)
5	5-103	Auto Tray Shift
6	5-013	Counter Up/Down Selection
7	5-017	Maximum Copy Quantity
8	5-101	Auto Reset Time Setting
9	5-102	Auto Energy Saver Time Setting
10	5-305	Auto Off Time Setting
11	5-004	ADS Priority Selection
12	5-106	Image Density Level Correction
13	5-907	Cover Mode Selection
14	5-908	Image Shift/Erase Selection
15	5-909	10 Key Zoom/Size Magnification
16	5-107	Image Shift Margin Adjustment
17	5-108	Edge Erase Margin Adjustment
18	5-110	Center Erase Margin Adjustment
19	5-906	Manual Staple Reset Time Setting
20	6-001	SADF Auto Reset Time Setting
21	6-002	ADF Free Size Setting
22	6-011	Thick/Thin Original Mode Selection
23	5-402	User Code Counter Check
24	5-404	User Code Counter Clear
25	5-405	User Code Number Setting
26	5-407	User Code Number Clear
27	5-001	All Indicators On
28	4-902	APS 8K/16K Detection

2.5 SP5-803 SENSOR/SWITCH INPUT SIGNAL DATA CHECK

1. Access SP5-803 (refer to section 2.1).
2. Select the required 3rd level program number using the [+] and [−] keys. See the following page for a list of which 3rd level number to use for each component.

   NOTE: Do not press [R/#] after selecting the 3rd level program number or this SP mode will not operate.
3. If you want to check the signal during the copy cycle, enter the number of copies in the copy counter and press the Start key.
4. The reading ("0" or "1") will be displayed in the reduce/enlarge indicator.
5. To check the reading from another sensor, switch, or signal, repeat from step 2.

3rd level No.	Sensor/Switch/Signal	Reading	
		0	1
1	Upper Relay Sensor	Paper not detected	Paper detected
2	Lower Relay Feed Sensor	Paper not detected	Paper detected
3	3rd Tray Paper Feed Sensor (Paper Tray Unit)	Paper not detected	Paper detected
4	4th Tray Paper Feed Sensor (Paper Tray Unit)	Paper not detected	Paper detected
5	5th Tray Paper Feed Sensor (Paper Tray Unit)	Paper not detected	Paper detected
6	Registration Sensor	Paper not detected	Paper detected
7	Fusing Exit Sensor	Paper not detected	Paper detected
8	By-pass Feed Paper Width Sensor	See the Note after the end of this table.	
9	By-pass Feed Paper End Sensor	Paper detected	Paper not detected
10	By-pass Feed Table Switch	Table is closed	Table is open
11	Upper Tray Paper End Sensor	Paper detected	Paper not detected
12	Upper Tray Upper Limit Sensor	Down	Up
13	Not Used	–	–
14	Upper Tray Switch	Not set	Set
15	Lower Tray Paper End Sensor	Paper detected	Paper not detected
16	Lower Tray Upper Limit Sensor	Down	Up
17	Not Used	–	–
18	Lower Tray Switch	Not set	Set
19	1st Tray Paper End Sensor (Paper Tray Unit)	Paper detected	Paper not detected
20	1st Tray Upper Limit Sensor (Paper Tray Unit)	Down	Up

3rd level No.	Sensor/Switch/Signal	Reading	
		0	1
21	1st Tray Set Sensor (Paper Tray Unit)	Not set	Set
22	2nd Tray Paper End Sensor (Paper Tray Unit)	Paper detected	Paper not detected
23	2nd Tray Upper Limit Sensor (Paper Tray Unit)	Down	Up
24	2nd Tray Set Sensor (Paper Tray Unit)	Not set	Set
25	3rd Tray Paper End Sensor (Paper Tray Unit)	Paper detected	Paper not detected
26	3rd Tray Upper Limit Sensor (Paper Tray Unit)	Down	Up
27	3rd Tray Set Sensor (Paper Tray Unit)	Not set	Set
28	LCT Paper End Sensor	Paper detected	Paper not detected
29	LCT Upper Limit Sensor	Off	On
30	LCT Lower Limit Sensor	Off	On
31	LCT Connector	Not connected	Connected
32	LCT Tray Down Switch	Off	On
33	LCT Cover Switch	Cover closed	Cover open
34	Original Length Sensor 2	Off	On
35	Original Length Sensor 3	Off	On
36	Original Length Sensor 4	Off	On
37	Original Width Sensor 5	Off	On
38	Original Width Sensor 6	Off	On
39	Original Width Sensor 7	Off	On
40	Scanner H.P. Sensor	Off	On
41	Lens horizontal H.P. Sensor	Off	On
42	Lens vertical H.P. Sensor	Off	On
43	3rd scanner H.P. Sensor	Off	On
44	Optics Thermistor	Off	On
45	Platen Cover Close Sensor	Platen cover open	Platen cover closed
46	Platen Cover Open Sensor	Platen cover closed	Platen cover open
47	Vertical Guide Set Switch	Vertical guide closed	Vertical guide open
48	Paper Exit Cover Switch	Paper exit cover closed	Paper exit cover open
49	Front Cover Switch	Front cover closed	Front cover open
50	Sorter Entrance Sensor	Off	On
51	Sorter Bin H.P. Sensor	Off	On
52	Sorter Bin Lift Sensor	Off	On
53	Sorter Cover Switch	Cover closed	Cover open
73	Duplex Entrance Sensor	Off	On
74	Duplex Turn Sensor	Off	On
75	Duplex Paper End Sensor	Paper detected	Paper not detected
76	Upper Tray Switch	Not set	Set

3rd level No.	Sensor/Switch/Signal	Reading	
		0	1
77	Duplex Side Fence Jogger H.P. Sensor	Off	On
78	Duplex End Fence Jogger H.P. Sensor	Off	On
80	Main Motor Lock	Off	On
81	Fusing Unit Set Sensor	Not set	Set
82	Transfer Belt Contact H.P. Sensor	Off	On
83	Toner End Sensor	Toner remains	Toner end
84	Key Counter Set	Not set	Set
85	Not Used	–	–
86	Total Counter On	Off	On
87	Auto Response Sensor	Off	On
90	ADF Original Width Sensor-3	Off	On
91	ADF Original Width Sensor-2	Off	On
92	ADF Original Width Sensor-1	Off	On
93	ADF Registration Sensor	Paper not detected	Paper detected
94	ADF Feed Out Sensor	Paper not detected	Paper detected
95	ADF Position Sensor	ADF closed	ADF open
96	ADF APS Start Sensor	On	Off
97	ADF Feed In Cover Open Sensor	Cover closed	Cover open
98	ADF Feed Out Cover Open Sensor	Cover closed	Cover open

NOTE

When SP5-803-008 (By-pass Feed Paper Width Sensor) is selected, one of the following numbers will be displayed in the reduce/enlarge indicator, depending on the by-pass feed side fence position.

A4/A3 Version

Side Fence Position	Displayed Number
A3	7
11"	3
B4	11
A4 (lengthwise)	9
B5 (lengthwise)	13
A5 (lengthwise)	12
B6 (lengthwise)	14

LT/DLT Version

Side Fence Position	Displayed Number
11"	3
8 1/2"	9
8"	13
5 1/2"	14

2.6 SP5-804 ELECTRICAL COMPONENT CHECK

1. Access SP5-804 (refer to section 2.1).
2. Select the required 3rd level program number using the + and − keys. See below for a list of which 3rd level number to use for each component.
3. Press the Start key to turn on the electrical component.
4. Press the Clear/Stop key to turn off the electrical component.
5. To turn on another electrical component, repeat from step 2.

CAUTION: The motors keep turning in this output mode regardless of inputs from sensors. To prevent mechanical or electrical damage, do not keep the electrical component on for a long time.

3rd level No.	Electrical Component
1	Main motor
2	Relay clutch
3	Registration clutch
4	Transfer belt contact clutch
5	Junction gate SOL
6	Not used
7	Sorter drive motor (A556 and A557 sorters only)
8	By-pass feed CL
9	By-pass feed pick-up SOL (A153 and A157 copiers only)
10	Upper paper feed CL
11	Upper tray separation SOL
12	Upper tray pick up SOL
13	Upper tray lift motor (up)
14	Upper tray lift motor (down)
15	Lower paper feed CL
16	Lower tray separation SOL
17	Lower tray pick-up SOL
18	Lower tray lift motor (up)
19	Lower tray lift motor (down)
20	LCT pick-up SOL
21	Not used
22	Not used
23	LCT display
24	Bin drive motor up
25	Bin drive motor down

3rd level No.	Electrical Component
26	Sorter stapler roller drive motor
27	Sorter stapler turn gate SOL
28	Sorter stapler bin lift motor
29	Sorter stapler jogger motor
30	Sorter stapler grip motor
31	Sorter stapler stapler motor
35	Cooling fan
36	Exhaust fan
37	Optics cooling fan
40	Exposure lamp
41	Quenching lamp, PTL
42	Toner supply CL
43	Development CL
44	Toner supply bottle motor
50	ADF feed-in motor
51	ADF feed-in motor (reverse)
52	ADF belt drive motor
53	ADF belt drive motor (reverse)
54	ADF feed-out motor
55	ADF inverter SOL
56	ADF display on

2.7 SP5-019 PAPER SIZE SETTING

2.7.1 Paper Size Selection for the Paper Tray Unit, LCT, and By-pass Feed

For the paper tray unit, LCT and by-pass feed, the paper size can be selected with SP5-019 using the following procedure.

1. Enter SP mode as follows;
   1) Press the "Clear Modes" key.
   2) Enter "107" with the numeric keys.
   3) Hold down the "Clear/Stop" key for more than 3 seconds.

   NOTE: When SP mode is selected, "1" blinks in the 3rd digit of the copy counter, the Auto Image Density indicator starts blinking, and the reduce/enlarge indicator turns off.
2. Enter SP5-019 as follows
   1) Enter "5" and press the "Enter" key.
   2) Enter "019" and press the "Enter" key.
3. Press the [+] or [−] key until the required 3rd level program number is selected.

3rd level (001~008 can be selected with the [+] and [−] keys.	A153/A157 copiers		A155/A159 copiers		A156/A160 copiers	
	Paper Tray Indicator	**Paper Size Selection**	**Paper Tray Indicator**	**Paper Size Selection**	**Paper Tray Indicator**	**Paper Size Selection**
SP5-019-001	—	—	—	—	—	—
SP5-019-002	—	—	—	—	▷ 2	2nd Tray
SP5-019-003	▷ 3	3rd Tray	▷ 3	3rd Tray	▷ 3	3rd Tray
SP5-019-004	▷ 4	4th Tray	▷ 4	4th Tray	▷ 4	4th Tray
SP5-019-005	▷ 5	5th Tray	▷ 5	5th Tray	☞	By-pass Feed
SP5-019-006	☞	By-pass Feed	☞	By-pass Feed	▷ T	LCT
SP5-019-007	▷ 1	SPECIAL*	▷ T	LCT	▷ 1	SPECIAL*
SP5-019-008	—	—	▷ 1	*SPECIAL	—	—

Example: In an A155 copier, to select the paper size for the LCT, select 3rd level program 007.

NOTE:
- The 3rd level program number is blinking in the 1st digit of the copy counter.
- Depending on the 3rd level program number, the paper tray indicator changes.
- SP settings for each 3rd level program number are blinking in the reduce/enlarge indicator.

*SPECIAL: See section 2.7.2 "Special Paper Size Selection for the 1st Tray".

4. Select the required SP setting with the numeric keys in accordance with the following tables, then press the "Enter" key.

NOTE: If you input the wrong SP setting by mistake, you can cancel it by pressing the "Clear/Stop" key before pressing the "Enter" key.

Paper size SP settings for the paper tray unit

SP Settings	A4 Version	LT Version
0	—	—
1	A3 (lengthwise)	11" X 17"
2	B4 (lengthwise)	8 1/2" X 14"
3	A4 (sideways)	11" X 8 1/2"
4	A4 (lengthwise)	8 1/2" X 11"
5	B5 (sideways)	—
6	B5 (lengthwise)	F (8" x 13"/lengthwise)
7	—	F4 (8 1/2" x 13"/lengthwise)
8	F (8" x 13"/lengthwise)	Folio (8 1/4" x 13"/lengthwise)
9	F4 (8 1/2" x 13"/lengthwise)	11" X 15"
10	Folio (8 1/4" x 13/ lengthwise)	10" X 14"
11	11" x 8 1/2"	8" X 10 1/2"
12	8 1/2" x 11"	8" X 10"
13	8K (267 mm x 390 mm/lengthwise)	A4 (sideways)
14	16K (267 mm x 195 mm/sideways)	A4 (lengthwise)
15	16K (195 mm x 267 mm/lengthwise)	—

Paper size SP settings for by-pass feed
(See Detailed Descriptions, section 11.9.3)

SP Settings	A4 Version	LT Version
0	Paper size detected in accordance with the side fence position	
1	8 1/2" x 11"	A4 (lengthwise)
2	B5 (lengthwise)	A4 (sideways)
3	A6 (lengthwise)	A5 (lengthwise)
4	F (8" x 13"/lengthwise)	A5 (sideways)
5	F4 (8 1/2" x 13"/lengthwise)	A3 (lengthwise)
6	Folio (8 1/4" x 13"/lengthwise)	Folio (8 1/4" x 13"/lengthwise)
7	10" x 14"	—
8	8K (267 mm x 390 mm/lengthwise)	—
9	16K (267 mm x 195 mm/sideways)	—
10	16K (195 mm x 267 mm/lengthwise)	—

Paper size SP settings for the LCT

SP Settings	A4 Version	LT Version
0	—	—
1	11" x 8 1/2"	11" x 8 1/2"
2	A4 (sideways)	A4 (sideways)

5. Leave SP mode by pressing the "Clear Modes" key three times.

2.7.2 Special Paper Size Selection for the 1st Tray

For the 1st tray, a wider range of paper sizes can be selected using SP5-019-007 for A153, A156, A157, and A160 copiers, or SP5-019-008 for A155 and A159 copiers.

NOTE: The definition of the 1st tray differs with the type of copier. See "Installation - Paper Feed Station Definition".

If a special paper size is selected, the machine ignores the paper size set with the paper size slider.

Select the special paper size in accordance with the following table.

SP5-019-007 (A153, A156, A157, and A160 copiers) SP5-019-008 (A155 and A159 copiers)	**A4/LT Version**
0	Paper size detected by the paper size slider
1	A3 (lengthwise)
2	297 mm x 432 mm (maximum size)
3	B4 (lengthwise)
4	A4 (sideways)
5	A4 (lengthwise)
6	B5 (sideways)
7	B5 (lengthwise)
8	A5 (sideways)
9	B6 (sideways)
10	200 mm x 148 mm
11	210 mm x 170 mm
12	210 mm x 340 mm
13	11" x 17"
14	8 1/2" x 14"
15	11" x 8 1/2"
16	8 1/2" x 11"
17	8 1/2" x 5 1/2"
18	F (8" x 13"/lengthwise)
19	F4 (8 1/2" x 13"/lengthwise)
20	Folio (8 1/4" x 13"/lengthwise)
21	11" x 15"
22	10" x 14"
23	8" x 10 1/2"
24	8" x 10"
25	225 mm x 276 mm
26	250 mm x 300 mm
27	8K (267 mm x 390 mm/lengthwise)
28	16K (267 mm x 195 mm/sideways)
29	16K (195 mm x 267 mm/lengthwise)

3. PRACTICAL SP MODE USE TABLE

3.1 REPLACEMENT AND CLEANING

The following table shows the SP modes that must be done, and the order in which they must be done when the listed items are replaced or cleaned.

(Priority Number)

No.	SP Mode No.	Description	Replaced or Cleaned Item				
			Developer	OPC Drum (replaced)	ID sensor	ADS Sensor	Exposure Lamp/ Optics
1	2-214 (2-215)	TD Sensor Initial Setting	O				
2	3-123 (3-106) (7-203)	Drum Initialize		O			
3	3-001 (3-002)	ID Sensor Initial Setting		O	O		
4	3-112 (3-111)	Forced V_R Detection		O	O		
5	4-001 (4-002)	Exposure Lamp Voltage Adjustment		O			O
6	4-201 (4-202)	Auto ADS Gain Adjustment		O		O	O
7	3-105 (3-106)	Forced V_L Detection		O			O

( ): SP Number to display the adjusted value.

3.2 MAJOR ADJUSTMENTS

The following table shows SP modes for major adjustments in the field:

TONER DENSITY (Detect Supply Mode)

Mode No.	Description	Settings
SP2-222	Toner Supply Ratio	1: 7%, 2: 15%, 3: 30%, 4: 60%

IMAGE DENSITY

Mode No.	Description	Settings
SP5-106	ADS Data Correction	0: Dark, 1: Normal, 2: Light
SP4-001	Exposure Lamp Voltage Adjustment	50 ~ 75V **(See the NOTE.)**
SP2-201-002	Lightest ID Level Development Bias (ID Level 7)	1: –40V, 2: ±0V, 3: –80V, 4: –120V

NOTE: After adjusting the Lamp Voltage, be sure to perform the Auto ADS Gain Adjustment (SP4-201) and the Forced V_L Detection (SP3-105).

OTHER COPY IMAGE ADJUSTMENTS

Mode No.	Description	Data
SP2-101-001	Leading Edge Erase Margin	0-32 (0.5 mm/step)
SP1-001	Registration	0-32 (0.5 mm/step)
SP4-008	Vertical Magnification	0-32 (0.1%/step)
SP4-101	Horizontal Magnification	0-32 (0.1%/step)
SP4-103	Focus Adjustment	0-150 (0.05 mm/step)
SP4-011	Lens Horizontal H.P. Adjustment	0-32 (0.2 mm/step)

3.3 DATA DISPLAY

The following table shows SP modes for displaying adjusted or detected values, or counter values.

Mode No.	Displayed Data	Mode No.	Displayed Data
1-106	Fusing Temperature	7-004	Initial Copy Counter Setting for RDS/CSS
2-002	Drum Charge Roller Voltage		
2-206	Development Bias	7-101	Total Copies by Paper Size
2-215	TD Sensor Output	7-203	Drum Counter
2-220	TD Sensor Initial Output	7-204	Feed Unit Counter
2-802	Drum Charge Roller Temperature	7-205	DF Counter
3-002	ID Sensor Initial Setting	7-206	Staple Counter
3-103	ID Sensor Output	7-301	Total Copies by Magnification
3-106	Initial V_{LP}/V_{LG}	7-401	SC Total Counter
3-107	Current V_{LP}/V_{LG}	7-402	SC Counter by Each Service Call
3-111	Current V_{RP}/V_{RG}	7-501	Total Jam Counter
4-002	Exposure Lamp Voltage	7-502	Total Copy Paper Jam Counter
4-202	ADS Initial Gain	7-503	Total Original Jam Counter
4-203	ADS Actual Gain	7-504	Total Jams by Location
5-402	User Code Counter	7-505	Total Original Jams by Location
5-408	Number of Registered User Codes	7-801	Main ROM Version
7-001	Total Operation Time	7-803	PM Counter
7-002	Total Original Counter		
7-003	Copy Charge Counter for RDS/CSS		

4. TEST POINTS (MAIN CONTROL BOARD)

Number	Label	Monitored Signal
TP1	(RXB)	RXB
TP2	(TXB)	TXB
TP3	(TXA)	TXA
TP4	(TXS)	TXS
TP5	(RXS)	RXS
TP6	(GND)	Ground
TP7	(+5 V)	+5 V
TP8	(TXL)	TXL
TP9	(P-SENSOR)	ID sensor output
TP11	(TRANS-FB)	Transfer current feed-back voltage
TP12	(LAMP)	Exposure lamp voltage feed-back voltage
TP13	(T-SENSOR)	Toner density sensor output
TP14	(ADS)	Auto image density sensor output
TP15	(RXA)	RXA
TP16	(CHA-FB)	Drum charge roller feed-back voltage
TP17	(DEV-BIAS)	Development bias feed-back voltage
TP18	—	Drum charge thermistor output
TP19	—	Not used
TP20	—	Secondary fusing thermistor output
TP21	—	Main fusing thermistor output

5. PREVENTIVE MAINTENANCE SCHEDULE

5.1 PM TABLE

NOTE: The amounts mentioned as the PM interval indicate the number of copies.

Symbol key: C: Clean, R: Replace, L: Lubricate, I: Inspect

A153/A155/A156	EM	120K	240K	360K	NOTE
OPTICS					
Mirrors, Lens, Reflector		C	C	C	Cotton pad with water, or blower brush.
Exposure Glass	C	C	C	C	Alcohol or glass cleaner
Exposure Lamp	I	I	I	I	Replace if necessary
Green Filter		C	C	C	Dry cloth
Scanner Guide Rails		C	C	C	Dry cloth
ADS, APS sensors		C	C	C	Blower brush. Do SP4-201 after cleaning the ADS sensor.
Lens Block Guide Rail	C	C	C	C	Dry cloth
Toner Shield Glass	C	C	C	C	Dry cloth
Dust Filter		C	C	C	Replace if necessary
NOTE: After cleaning the exposure lamp and/or optics, do SP4-001, then 4-201, then 3-105.					
AROUND THE DRUM					
Drum Charge Roller		R	R	R	Clean with the special cloth if necessary (the cloth must be dry)
Drum Charge Roller Cleaner		R	R	R	Replace with the drum charge roller as a set.
Drum Charge Roller Terminal		R	R	R	Replace with the drum charge roller as a set.
ID Sensor		C	C	C	Blower brush. After cleaning, do SP3-001 then SP3-112.
Erase Lamp		C	C	C	Dry cloth
Quenching Lamp		C	C	C	Dry cloth
Pick-off Pawls		C	R	C	Dry cloth
Pre-Transfer Lamp		C	C	C	Dry cloth and blower brush
DEVELOPMENT UNIT					
Developer		R	R	R	Do SP2-214 after replacement.
Side Seal		I	I	I	
Development Filter		R	R	R	
Entrance Seal	C	C	C	C	Replace if necessary
Toner Supply Unit	C	C	C	C	Blower brush
PAPER FEED (for each paper feed station)					
Pick-up, Feed, Separation Rollers (Paper tray)	C	C	R	C	Clean with water. Replace these rollers as a set.
Pick-up, Feed, Separation Rollers (LCT,By-pass feed)	C	C	R	C	Clean with water. Replace these rollers as a set.

A153/A155/A156	EM	120K	240K	360K	NOTE
Separation Torque Limiter (LCT, By-pass feed)			R		Clean with water. Replace these rollers as a set.
Paper Feed Guide Plate		C	C	C	Alcohol
Relay rollers		C	C	C	Alcohol or water
Registration roller		C	C	C	Alcohol or water
Bottom Plate Pad (Paper tray, By-pass feed, LCT)	C	R	R	R	Water
CLEANING UNIT					
Drum Cleaning Blade		R	R	R	Spread setting powder. See "Drum Cleaning Blade Replacement".
Side Seal		C	C	C	Replace if necessary
Cleaning Entrance Seal		C	C	C	Replace if necessary
TRANSFER BELT UNIT					
Transfer Belt	C	C	R	C	Spread setting powder. "See Transfer Belt Cleaning Blade Replacement"
Transfer Belt Cleaning Blade	C	R	R	R	
Used Toner Tank		C	C	C	Blower brush or vacuum cleaner
FUSING UNIT					
Fusing Entrance and Exit Guide Plates		C	C	C	Suitable solvent
Fusing Lamps		I	I	I	Replace if necessary
Hot Roller		R	R	R	
Pressure Roller		C	R	C	Suitable solvent
Fusing Thermistors	C	I	I	I	Suitable solvent
Hot and Pressure Roller Bearings		I	I	I	Replace if necessary
Fusing Antistatic Brush		I	I	I	Replace if necessary
Cleaning Roller		R	R	R	Suitable solvent
Cleaning Roller Bushings		I	I	I	Replace if necessary
Fusing Exit Rollers			C		
Turn Guide Transport Rollers			C		
Hot Roller Strippers	C	R	R	R	
DUPLEX TRAY					
Clutch Spring		L	L	L	Mobil Temp 78. See Note 1.
Feed Roller		R	R	R	
Bottom Plate Pad		R	R	R	
Mylars		I	I	I	Replace if necessary
OTHERS					
Drive Belts		I	I	I	Replace if necessary

Service Tables

A157/A159/A160	EM	100K	200K	300K	NOTE
OPTICS					
Mirrors, Lens, Reflector		C	C	C	Cotton pad with water, or blower brush
Exposure Glass	C	C	C	C	Alcohol or glass cleaner
Exposure Lamp	I	I	I	I	Replace if necessary
Green Filter		C	C	C	Dry cloth
Scanner Guide Rails		C	C	C	Dry cloth
ADS, APS sensors		C	C	C	Blower brush. Do SP4-201 after cleaning the ADS sensor.
Lens Block Guide Rail	C	C	C	C	Dry cloth
Toner Shield Glass	C	C	C	C	Dry cloth
Dust Filter		C	C	C	Replace if necessary
NOTE: After cleaning the exposure lamp and/or optics, do SP4-001, then 4-201, then 3-105.					
AROUND THE DRUM					
Drum Charge Roller		R	R	R	Clean with the special cloth if necessary (the cloth must be dry)
Drum Charge Roller Cleaner		R	R	R	Replace with the drum charge roller as a set.
Drum Charge Roller Terminal		R	R	R	Replace with the drum charge roller as a set.
ID Sensor		C	C	C	Blower brush. After cleaning, do SP3-001 then SP3-112.
Erase Lamp		C	C	C	Dry cloth
Quenching Lamp		C	C	C	Dry cloth
Pick-off Pawls		C	R	C	Dry cloth
Pre-Transfer Lamp		C	C	C	Dry cloth and blower brush
DEVELOPMENT UNIT					
Developer		R	R	R	Do SP2-214 after replacement.
Side Seal		I	I	I	
Development Filter		R	R	R	
Entrance Seal	C	C	C	C	Replace if necessary
Toner Supply Unit	C	C	C	C	Blower brush
PAPER FEED (for each paper feed station)					
Feed Rollers (Paper tray)	C	R	R	R	Water
Pick-up, Feed, Separation Rollers (LCT, By-pass feed)	C	C	R	C	Clean with water. Replace these rollers and the torque limiter as a set.
Separation Torque Limiter (LCT, By-pass feed)			R		Clean with water. Replace these rollers and the torque limiter as a set.
Paper Feed Guide Plate		C	C	C	Alcohol or water
Relay rollers		C	C	C	Alcohol or water
Registration roller		C	C	C	Alcohol or water
Bottom Plate Pad (Paper tray, By-pass feed, LCT)	C	R	R	R	Water

A157/A159/A160	EM	100K	200K	300K	NOTE
CLEANING UNIT					
Drum Cleaning Blade		R	R	R	Spread setting powder. See "Drum Cleaning Blade Replacement".
Side Seal		C	C	C	Replace if necessary
Cleaning Entrance Seal		C	C	C	Replace if necessary
TRANSFER BELT UNIT					
Transfer Belt	C	C	R	C	Spread setting powder. "See Transfer Belt Cleaning Blade Replacement" Wipe with a dry cloth.
Transfer Belt Cleaning Blade	C	R	R	R	
Used Toner Tank		C	C	C	Blower brush or vacuum cleaner
FUSING UNIT					
Fusing Entrance and Exit Guide Plates		C	C	C	Suitable solvent
Fusing Lamps		I	I	I	Replace if necessary
Hot Roller		R	R	R	
Pressure Roller		C	R	C	Suitable solvent
Fusing Thermistors	C	I	I	I	Suitable solvent
Hot and Pressure Roller Bearings		I	I	I	Replace if necessary
Fusing Antistatic Brush		I	I	I	Replace if necessary
Cleaning Roller		R	R	R	Suitable solvent
Cleaning Roller Bushings		I	I	I	Replace if necessary
Fusing Exit Rollers			C		
Turn Guide Transport Rollers			C		
Hot Roller Strippers	C	R	R	R	
DUPLEX TRAY					
Clutch Spring		L	L	L	Mobil Temp 78. See Note 1.
Feed Roller		R	R	R	
Bottom Plate Pad		R	R	R	
Mylars		I	I	I	Replace if necessary
OTHERS					
Drive Belts		I	I	I	Replace if necessary
PAPER TRAY UNIT (A553)					
Feed Rollers	C	R	R	R	Water
Relay rollers		C	C	C	Alcohol or water
Bottom Plate Pad	C	R	R	R	Water
Paper Feed Guide Plate		C	C	C	Alcohol or water
Sensors		I	I	I	Replace if necessary
Drive Belts		I	I	I	Replace if necessary

A157/A159/A160	EM	100K	200K	300K	NOTE
SORTER ADAPTER (A568)					
Exit Drive Roller			C		Alcohol or Water
Upper Roller			C		Alcohol or Water

	EM	120K	240K	360K	NOTE
PAPER TRAY UNIT (A549/A550)					
Pick-up, Feed, Separation Rollers	C	C	R	C	Water, Replace these rollers as a set.
Relay rollers		C	C	C	Alcohol or water
Bottom Plate Pad	C	R	R	R	Water
Relay Clutch		I	I	I	Replace every 1500K copies.
Feed Clutch		I	I	I	Replace if necessary
Drive Belts		I	I	I	Replace if necessary

	EM	80K	160K	240K	NOTE
AUTO DOCUMENT FEEDER (A548)			(for originals)		
Transport Belt	C	R	R	R	Belt cleaner
Friction Belt	C	R	R	R	Water
Feed Roller	C	R	R	R	Water

	EM	PM	NOTE
20-BIN SORTER STAPLER (A554)			
Transport and Exit Rollers	C	C	Alcohol or water
Bins	C	C	Alcohol or water
Bin and Paper Sensors	C	C	Blower brush
Bushings	L	L	Launa oil; if bushings generate noise.
Worm Gears	L	L	Grease G501; if worm gears generate noise.
Bin Cam Tracks	L	L	Grease G501; if bin cam tracks generate noise.
10-BIN SORTER STAPLER (A555)			
Transport Roller	C	C	Alcohol or water
Bins	C	C	Alcohol or water
Bin and Paper Sensors	C	C	Blower brush
Bushings	L	L	Launa oil; if bushings generate noise.
Helicam Wheels	L	L	Grease G501; if helicam wheels generate noise.
SORTER (A556/A557)			
Bin Guide/Wheel	L	L	Grease G501; if those generate noise.
Bushings	L	L	Grease G501; if bushings generate noise.
Exit Roller	C	C	Alcohol or water

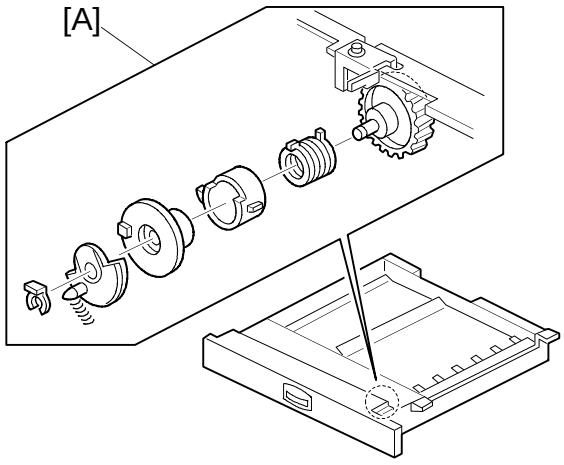

Note 1.
Duplex Tray: Clutch Spring

Do the following every 120K (A153/A155/A156 copiers) or 100K (A157/A159/A160 copiers).

Clean the clutch assembly [A]. Then lubricate the clutch spring with Mobil Temp 78.

5.2 REGULAR PM PROCEDURE

Every 120k (A153/A155/A156), or 100k (A157/A159/A160)

Every 240k (A153/A155/A156), or 200k (A157/A159/A160)

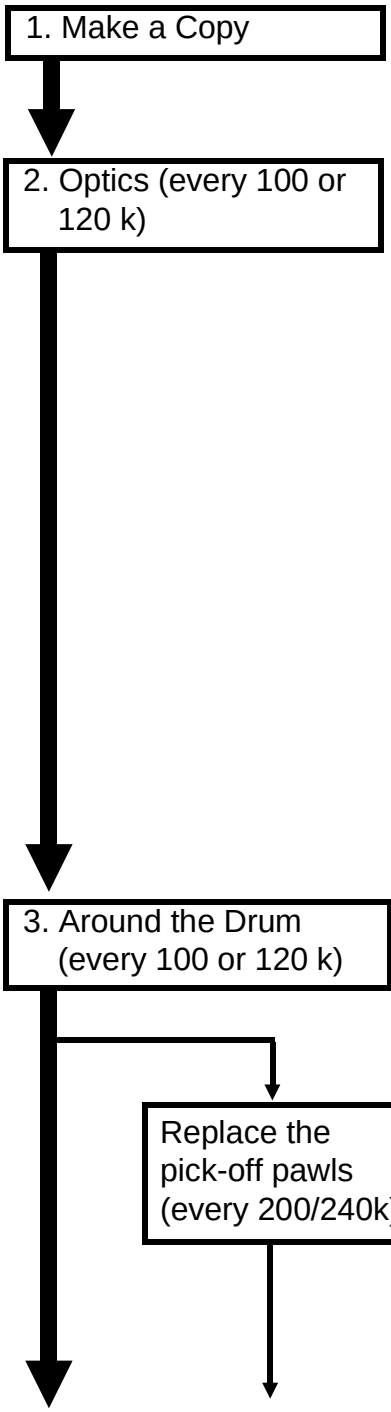

Make a copy of an OS-A3 test chart at manual image density level 4.

1. Clean the mirrors, lens, and reflectors with a soft cloth, cotton pad with water, or a blower brush.
2. Clean the exposure glass with alcohol or glass cleaner.
3. Clean the scanner guide rail with a dry cloth.
4. Clean the lens block guide rail with a dry cloth.
5. Clean the ADS sensor and the original width and length sensors
6. Inspect the exposure lamp.
7. Clean the toner shield glass and the dust filter.

1. Remove the drum and clean the ID sensor with a blower brush.
2. Clean the pick-off pawls.
3. Clean the quenching, erase, and pre-transfer lamps with a dry cloth. Discharge any static electricity before putting them back.
4. Put back the drum.
5. Replace the drum charge roller, drum charge roller cleaner, and drum charge roller terminal.

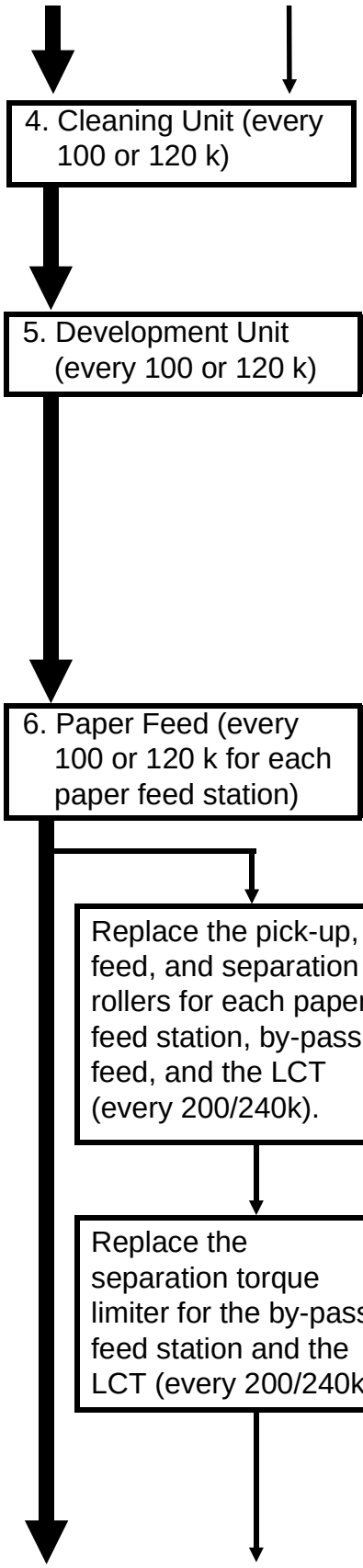

1. Clean the inside of the cleaning unit and the seals.
2. Replace the cleaning blade.

1. Remove the old developer.
2. Clean the development unit and seals.
3. Clean around the openings of the toner supply unit with a blower brush.
4. Pour in a pack of new developer.
5. Replace the development filter.

1. Clean the paper guide plate.
2. Clean the paper feed, pick-up, separation, and relay rollers for each paper feed station, by-pass feed, and the LCT.
3. Replace the bottom plate pad for each paper feed station, by-pass feed, and the LCT.
4. Clean the registration rollers.

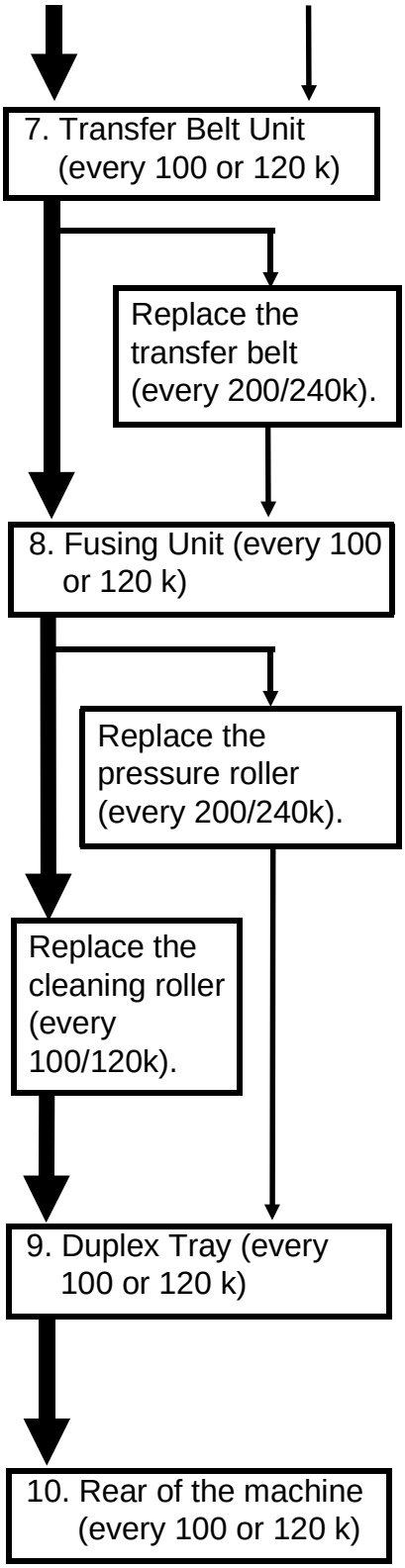

1. Remove the transfer belt and clean the used toner tank with a blower brush or vacuum cleaner.
2. Clean the transfer belt.
3. Replace the transfer belt cleaning blade.

1. Clean the entrance and exit guide plates
2. Inspect the thermistor, fusing lamps, hot and pressure roller bearings, antistatic brush, and cleaning roller bushings.
3. Clean the pressure roller, cleaning roller, exit roller, and turn gate transport rollers.
4. Replace the hot roller strippers.
5. Replace the hot roller.

1. Inspect the mylars.
2. Replace the feed roller and the bottom plate pad.
3. Lubricate the clutch spring with Mobil Temp 78.

1. Inspect the timing belts.

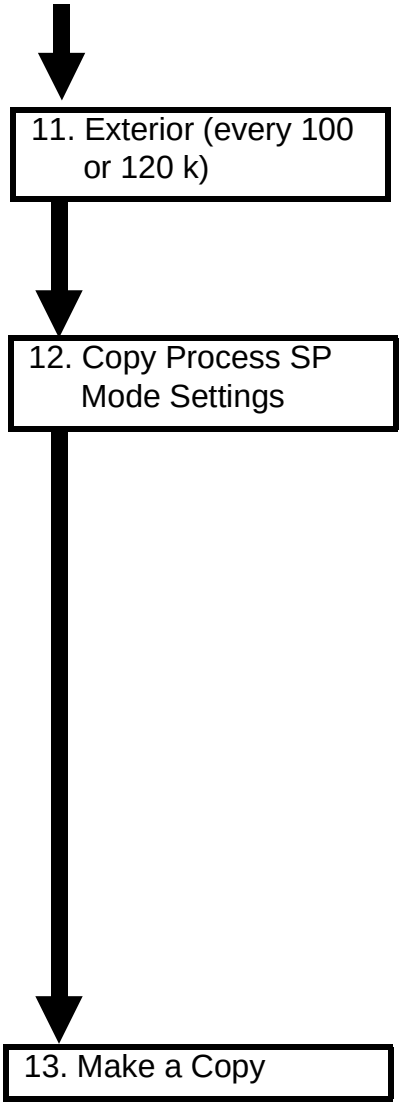

1. Clean the covers.

Perform the following SP Modes in the following order.

1. SP2-214 TD Sensor Initial Setting
2. SP3-001 ID Sensor Initial Setting
3. SP3-112 Forced V_R Detection
4. * SP4-001 Exposure Lamp Voltage Adj.
5. SP4-201 Auto ADS Gain Adj.
6. * SP3-105 Forced V_L Detection

*: Perform these SP modes only if the exposure lamp has been replaced.

Make a copy of an OS-A3 test chart at manual image density level 4.

6. SPECIAL TOOLS AND LUBRICANTS

Part Number	**Description**	**Q'ty**
A153 9001	Scanner Adjustment Tool	1 set
A153 9004	WIPING CLOTH (Drum Charge Roller Cloth)	1
5420 9516	Test Chart - OS-A3 (10 pcs/set)	1
5420 9507	Digital Multimeter	1
A008 9502	Silicone Grease - G40M	1
5442 9103	Launa Oil	1
5447 9078	Heat Resistant Grease - MT-78	1
5203 9501	Grease - 501	1

SECTION 5

REPLACEMENT AND ADJUSTMENT

1. INNER AND OUTER COVERS

1.1 OUTER COVER REMOVAL

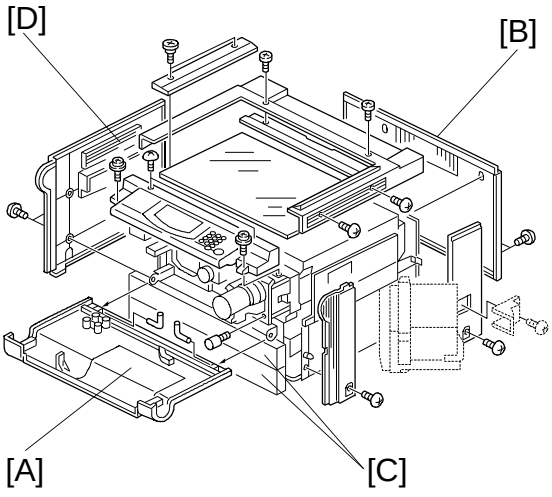

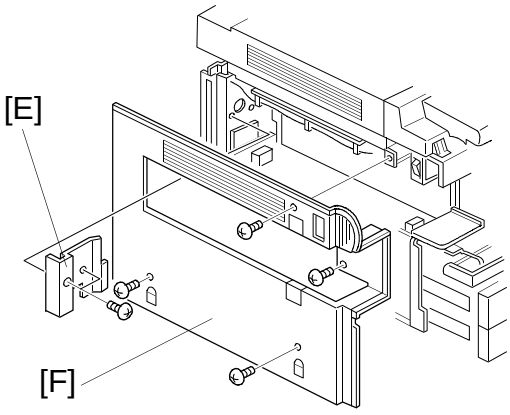

1.1.1 Front Cover

1. Open the front cover [A].
2. Remove the front cover (2 pins).

1.1.2 Rear Cover

1. Loosen the 2 grounding screws for the upper holes.
2. Remove the rear cover [B] (2 screws).

1.1.3 Left Cover

- A153/A155/A156 -

1. Open the front cover and pull out the paper trays [C].
2. Remove the left cover [D] (2 screws).

- A157/A159/A160 -

1. Open the front cover and pull out the paper trays.
2. Remove the cover plate [E] (2 screws).
3. Remove the left cover [F] (4 screws).

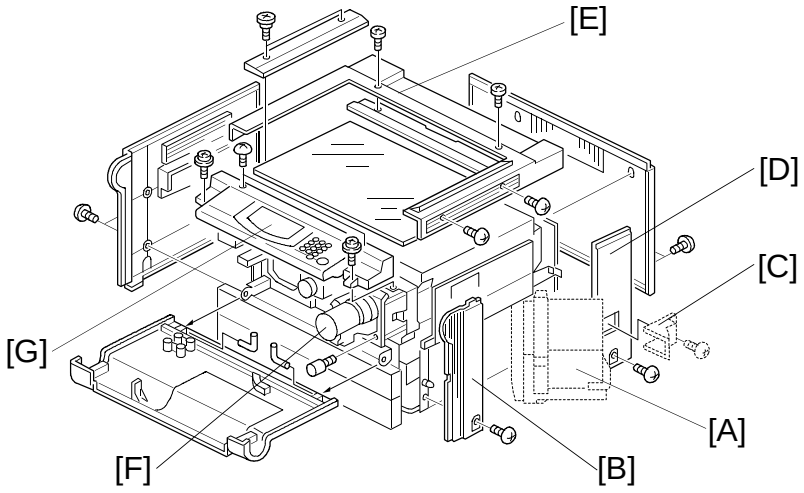

1.1.4 Front Right Cover

1. Open the front cover and pull out the paper trays.
2. **All models except A153/A157:** Swing open the optional LCT unit [A].
3. Remove the front right cover [B] (1 screw).

1.1.5 Rear Right Cover

1. Remove the rear cover.
2. **All models except A153/A157:** Remove the LCT harness cover [C] (1 screw) and the LCT rear cover (2 screws).
3. Remove the rear right cover [D] (1 screw).

1.1.6 Top Cover

1. Remove the optional platen cover or the optional DF.
2. Remove the top cover [E] (6 screws).

1.1.7 Operation Panel

1. Lift up the optional platen cover or the optional DF.
2. Open the front cover and slide out the toner bottle holder assembly [F] (1 screw and 1 knob screw).
3. Remove the operation panel [G] (4 screws and 2 connectors).

   NOTE: For the A156 copier, remove 5 screws and 3 connectors.

1.2 INNER COVER REMOVAL

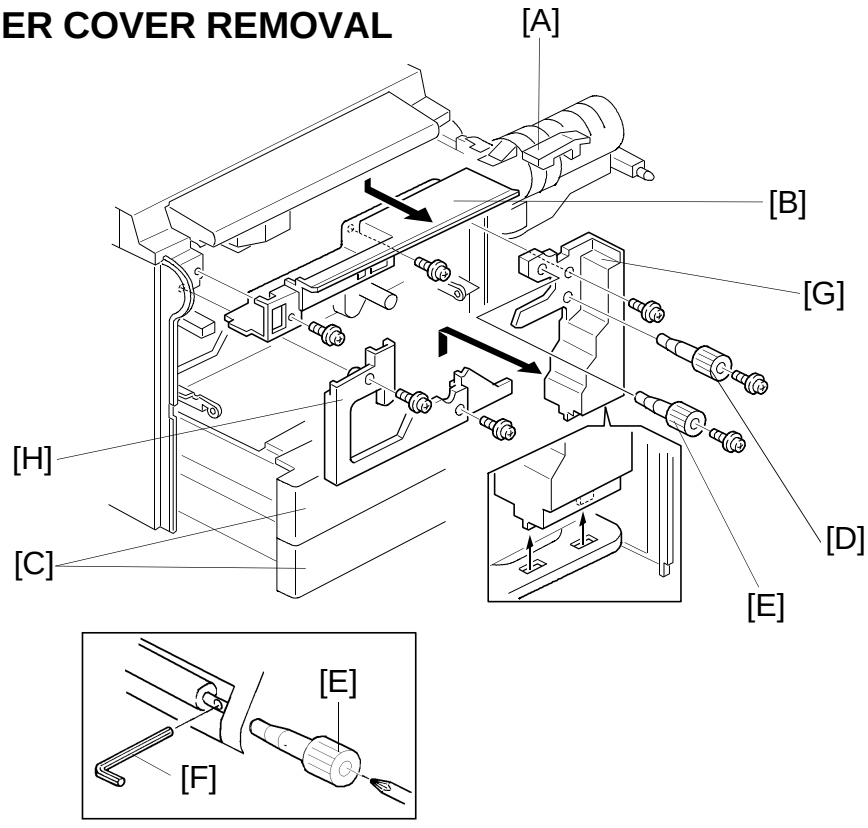

1.2.1 Upper Inner Cover

1. Open the front cover and slide out the toner bottle holder assembly [A] (1 screw and 1 knob screw).
2. Remove the upper inner cover [B] (2 screws).

1.2.2 Lower Right Inner Cover

1. Remove the front cover and open the tray units [C].
2. Remove the two knobs [D and E] (1 screw each).

   NOTE: 1. Knob [D] is not installed in A157/A159/A160 copiers.
   2. When removing the knob [E], insert an allen key [F] into the hole in the registration roller shaft as shown in the illustration.
3. Remove the lower right inner cover [G] (1 screw).

1.2.3 Lower Left Inner Cover

1. Remove the front cover and open the tray units.
2. Remove the lower left inner cover [H] (2 screws).

2. OPTICS

2.1 EXPOSURE GLASS REMOVAL

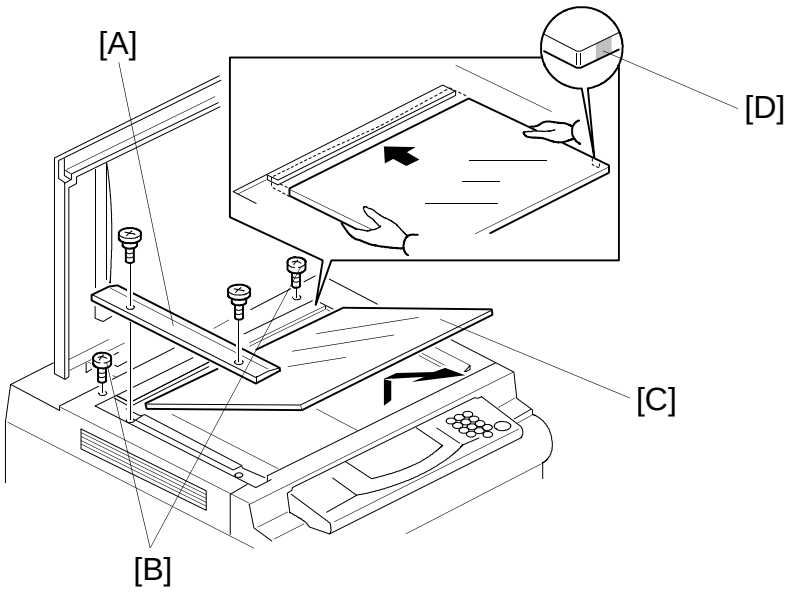

1. Remove the left scale [A] (2 shoulder screws).
2. Remove the 2 screws [B] securing the rear scale.
3. Grasp the front left corner of the exposure glass [C] and lift it up slightly. Then slide the exposure glass out from the rear scale.

NOTE: When reinstalling the exposure glass, make sure that the [D] is positioned at the front right corner as shown. This ensures that the correct side of the glass is face-up; this side is smoother and it generates less static electricity when the DF is used.

2.2 EXPOSURE LAMP REPLACEMENT

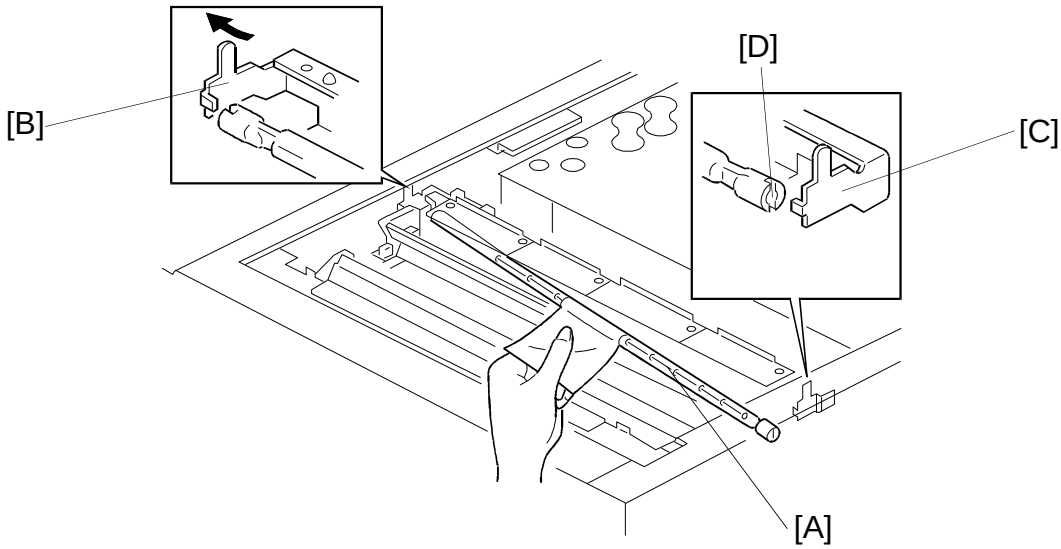

NOTE: Do not touch the reflector or the new exposure lamp with your bare hands. Use a strip of paper as shown. (Oil marks from fingers on the lamp or reflectors will be affected by heat from the lamp and will cause discoloration.)

1. Turn off the main switch and unplug the machine.
2. Remove the exposure glass. (See Exposure Glass Removal.)
3. Move the scanner lamp to the fan duct in the rear frame (about 150 mm from the home position).
4. Place a strip of paper around the exposure lamp [A].
5. Release the exposure lamp from the rear terminal [B] while pressing the rear terminal tab in the direction shown above.

   NOTE: Push the terminal very gently, or it will be damaged.
6. Slide the exposure lamp into the rear cutout, and take out the exposure lamp from the front side.
7. Install a new lamp. Use a strip of paper to hold the lamp. Set the front terminal [C] first.

   NOTE: 1) Make sure that the exposure lamp is properly positioned at the front and rear terminals. (The slot [D] and terminal pin should engage.)

   2) Return the first scanner to the original position and make sure that the first scanner moves smoothly.

   3) Clean the optics components and perform the following SP modes in the following order: SP4-001, SP4-201, SP3-105.

2.3 SCANNER DRIVE BELT REPLACEMENT

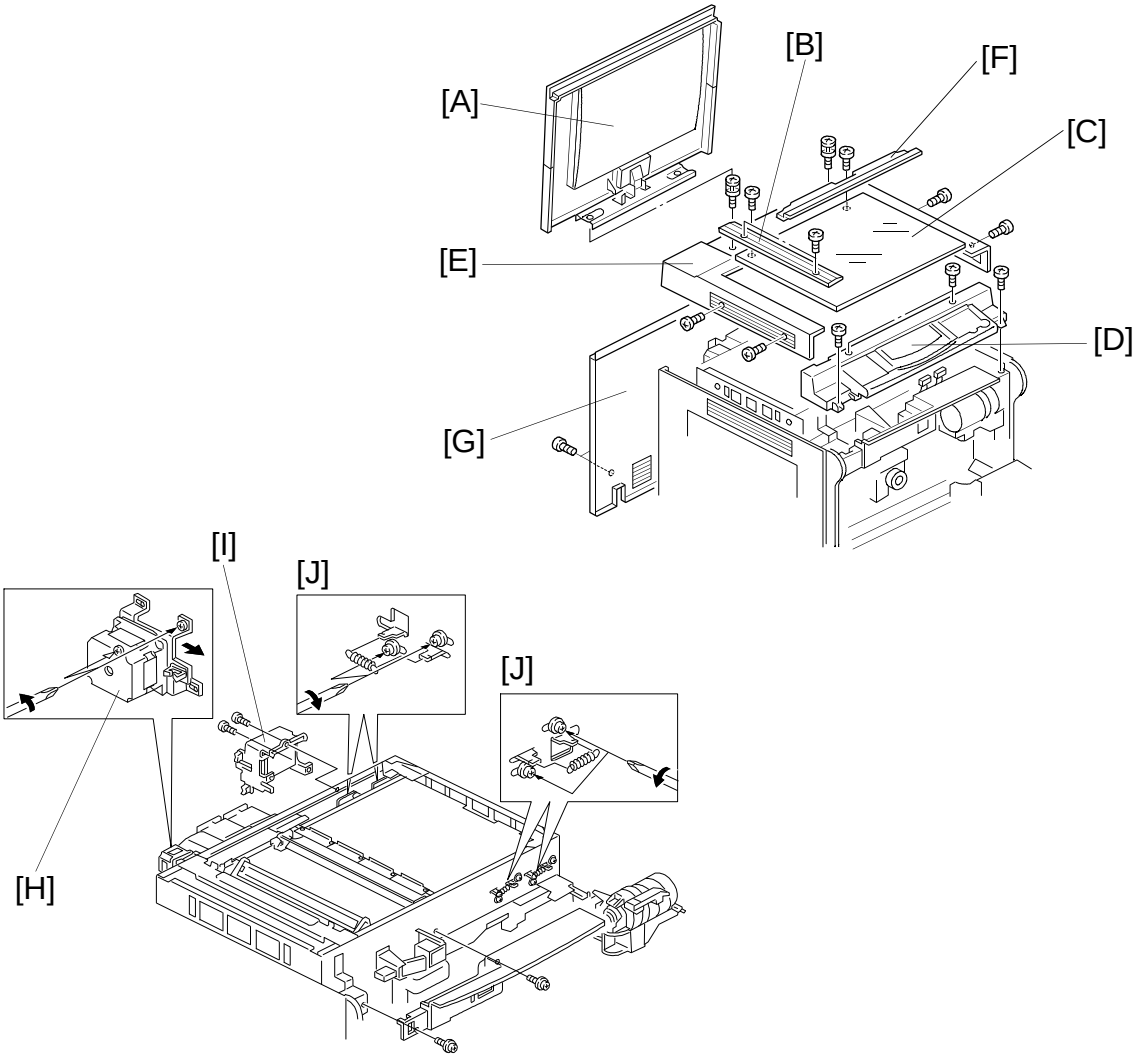

1. Remove the following parts:
   - Platen cover [A] or DF
   - Left scale [B] (2 shoulder screws)
   - Exposure glass [C]
   - Operation panel [D]
   - Top cover [E]
   - Rear scale [F]
   - Rear cover [G]
   - Upper inner cover
2. Loosen the 4 screws securing the scanner drive motor assembly [H].
3. Remove the main control board bracket (4 screws), and remove the C/B high voltage supply board assembly [I] (2 screws, 3 connectors and 1 clamp).
4. Loosen the screws securing the belt tension brackets [J] and remove all four belt tension springs as shown.

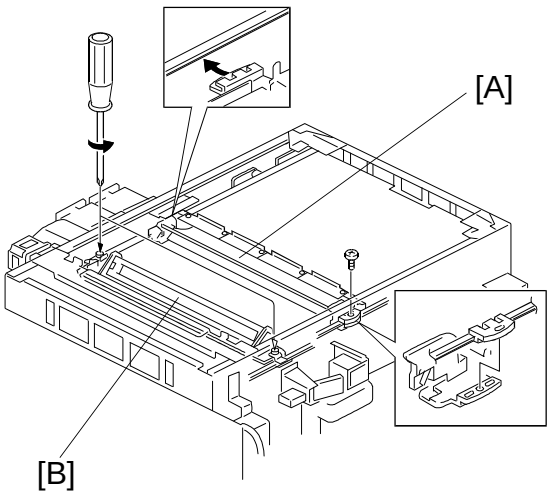

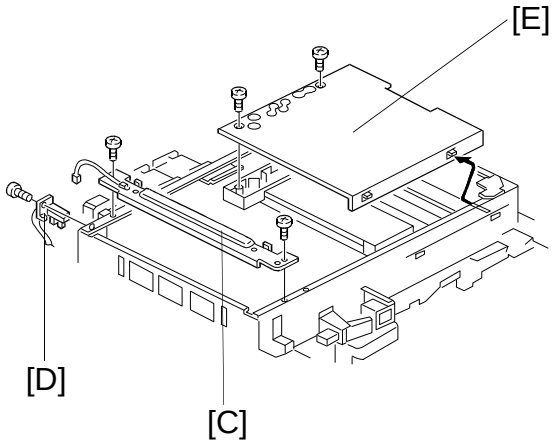

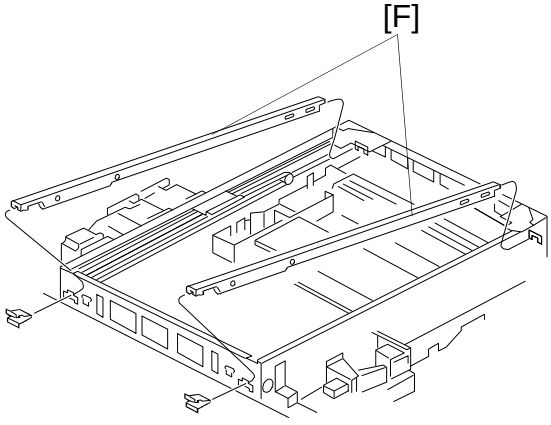

5. Remove the 1st scanner [A] from the scanner drive belt (1 screw).
6. Remove the 2nd scanner [B] from the scanner drive belt by loosening the 2 screws as shown.
7. Remove the left scale bracket [C] with the optics thermistor (2 screws and 1 connector).
8. Remove the scanner home position sensor bracket [D] (1 screw and 1 connector).
9. Remove the lens housing cover [E] (2 screws).
10. Remove both scanner guide rails [F] (1 spring plate each).

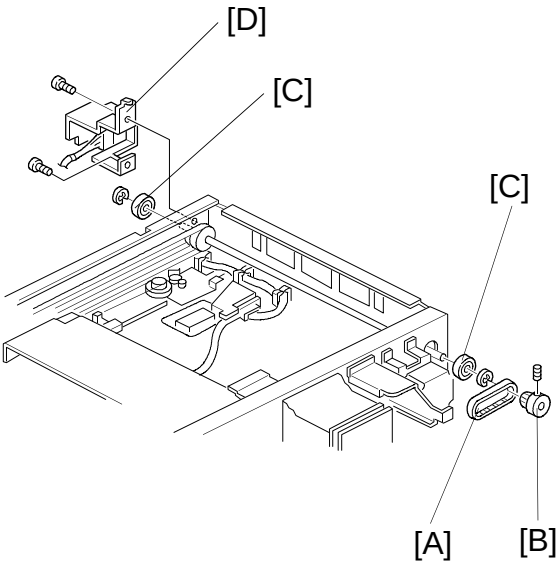

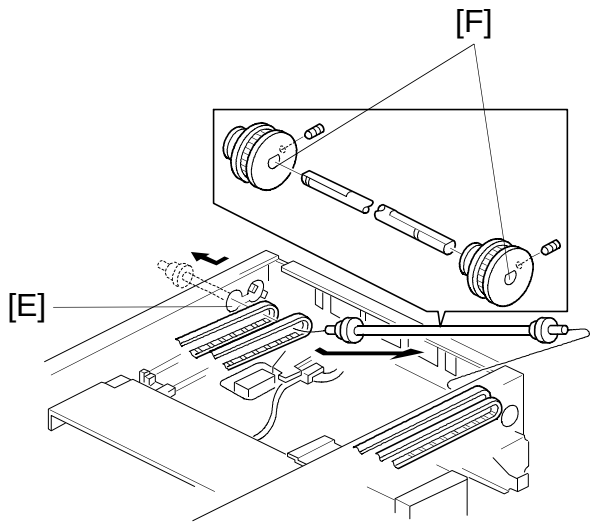

11. Remove the scanner motor belt [A] by removing the pulley [B] (1 Allen screw).
12. Remove both bearings [C] (1 E-ring each).
13. Remove the left cover and swing the main switch bracket [D] out of the way.
14. Slide the front pulley to the cutout [E] of the front frame and remove all four scanner drive belts.

NOTE: When reinstalling, make sure of the following points:

- If the pulleys [F] have been removed, make sure that they face the same direction as shown when you put them back.
- The belt tension bracket should be tightened after all the belt tension springs have been installed.
- Adjust the position of the 1st and 2nd scanner by using the positioning bracket kit. (See Scanner Positioning Adjustment.)

2.4 SCANNER POSITIONING ADJUSTMENT

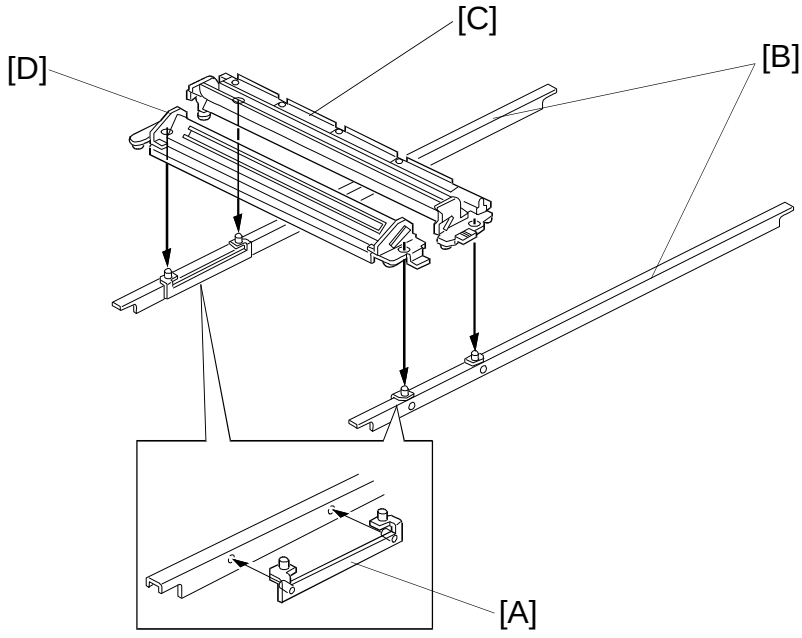

1. Remove the following parts:
   - Platen cover or DF
   - Left scale
   - Exposure glass
   - Top cover
   - Rear scale
   - Rear cover
   - Scanner HP. sensor
2. Manually move the 1st scanner to about the center, and loosen the belt clamps of the 1st and 2nd scanner.
3. Set the scanner adjustment tools [A] on both guide rails [B] as shown.

   NOTE: Scanner adjustment tools are available as a service part. P/N: A1539001 (See the parts catalog.)
4. Manually set the 1st [C] and 2nd [D] scanner on the pins of the scanner positioning bracket as shown.
5. Tighten the belt clamps.

   NOTE: To remove the scanner positioning brackets, gently lift up both scanner units and move them towards the home position.
6. Reassemble the machine and check the copy quality.

2.5 3RD SCANNER MOTOR REPLACEMENT

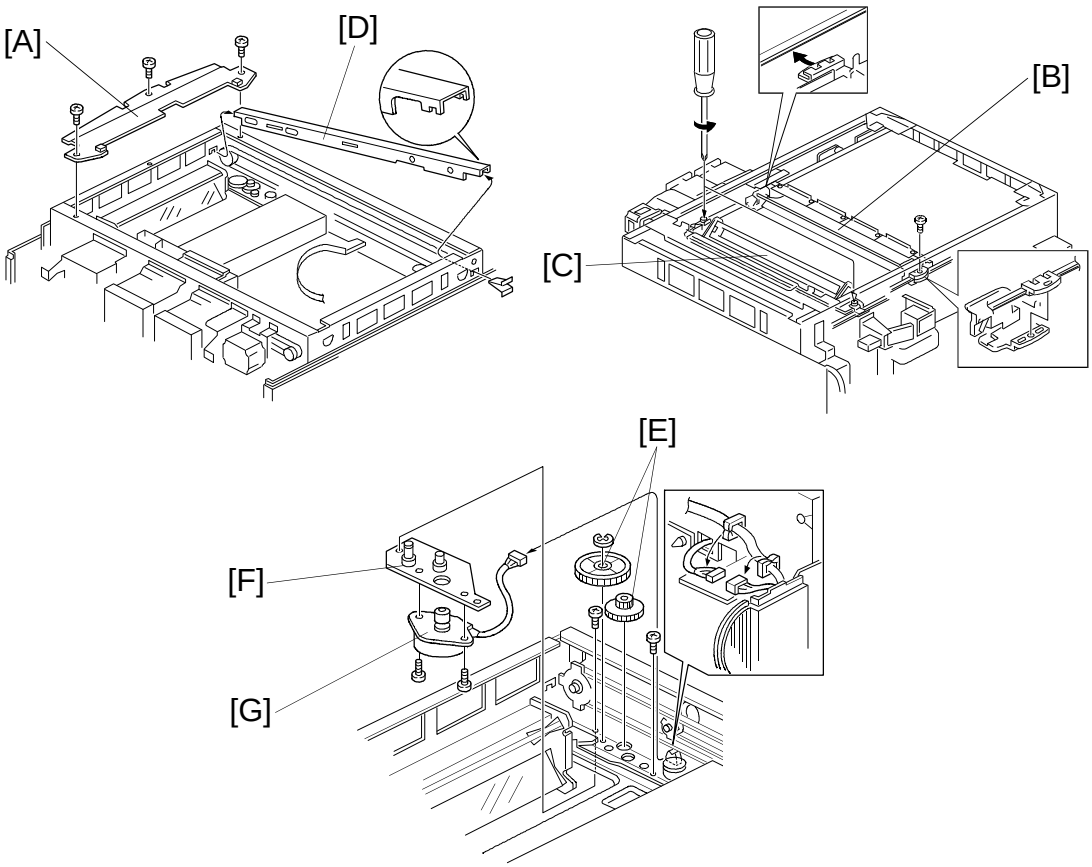

1. Remove the following parts:
   - Platen cover or DF
   - Left scale
   - Exposure glass
   - Top cover
   - Rear scale
   - Lens cover
   - Operation panel
   - Left scale bracket
   - Scanner HP. sensor bracket
2. Remove the upper right frame [A] (3 screws).
3. Remove the 1st scanner [B] from the scanner drive belt (1 screw).
4. Remove the 2nd scanner [C] from the scanner drive belt by loosening the 2 screws as shown.
5. Remove the front scanner guide rail [D] (1 spring plate).
6. Remove the 2 idle gears [E] (1 E-ring).
7. Remove the 3rd scanner motor bracket [F] (2 screws and 1 connector).
8. Replace the 3rd scanner motor [G] (2 screws).

2.6 LENS VERTICAL DRIVE MOTOR REPLACEMENT

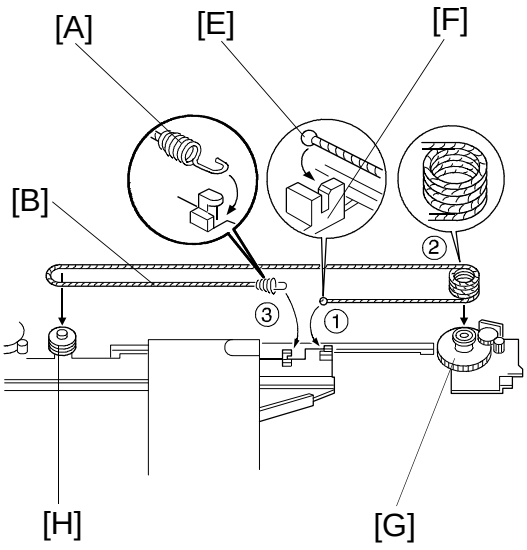

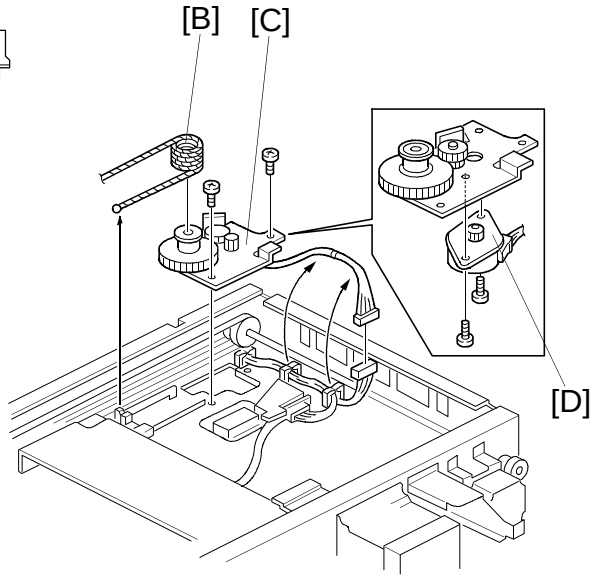

1. Perform steps 1 to 5 of the 3rd scanner motor replacement.
2. Remove the tension spring [A] and the lens drive wire [B].
3. Remove the lens vertical drive motor bracket [C] (2 screws, 2 clamps, and 1 connector).
4. Remove the motor [D] from the bracket (2 screws).

- Wire installation -

1. Place the bead [E] in the slot [F] and wind the drive wire four and a half times around the pulley [G].
2. Wrap the wire around the wire pulley [H] and attach the spring [A] to the bracket.

3. DEVELOPMENT AND TONER SUPPLY

3.1 DEVELOPMENT UNIT REMOVAL

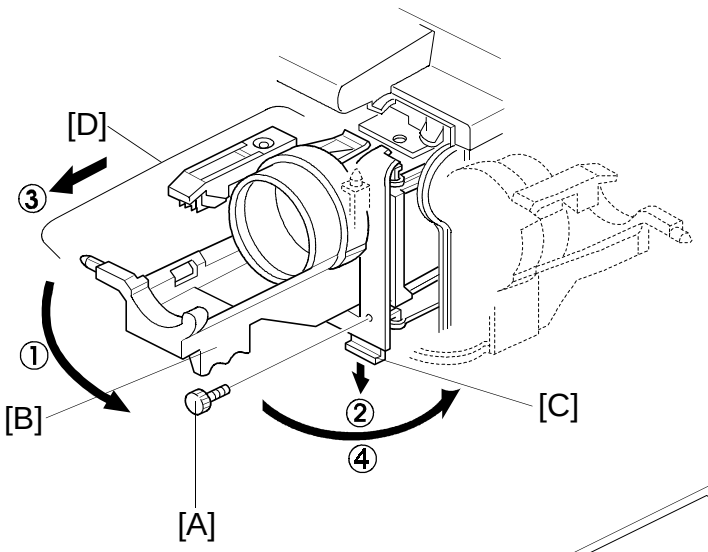

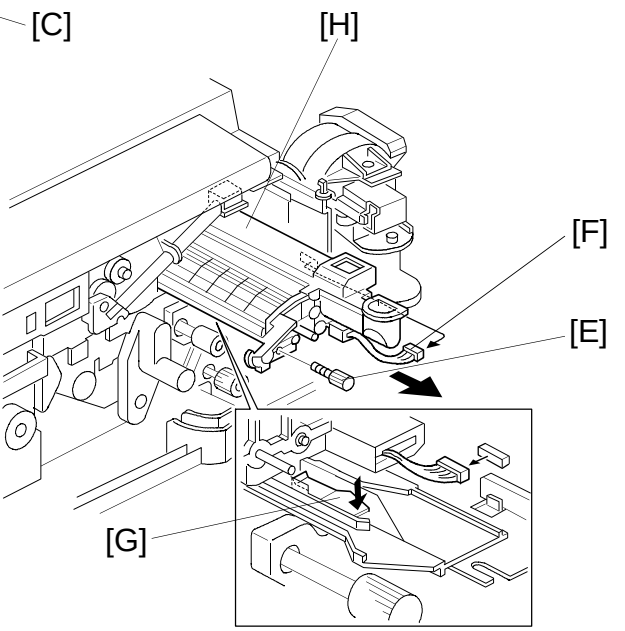

1. Turn off the main switch.
2. Open the front cover.
3. Remove the knob screw [A].
4. ① Swing out bottle holder [B] and ② pull down the lock lever [C].
   ③ Then slide out the bottle holder assembly [D] and ④ swing out the bottle holder assembly.
5. Remove the knob screw [E] and disconnect the connector [F].
6. Press down the development unit lock lever [G] and pull out the development unit [H]. Then place it on a clean sheet of paper.

3.2 DEVELOPER REPLACEMENT

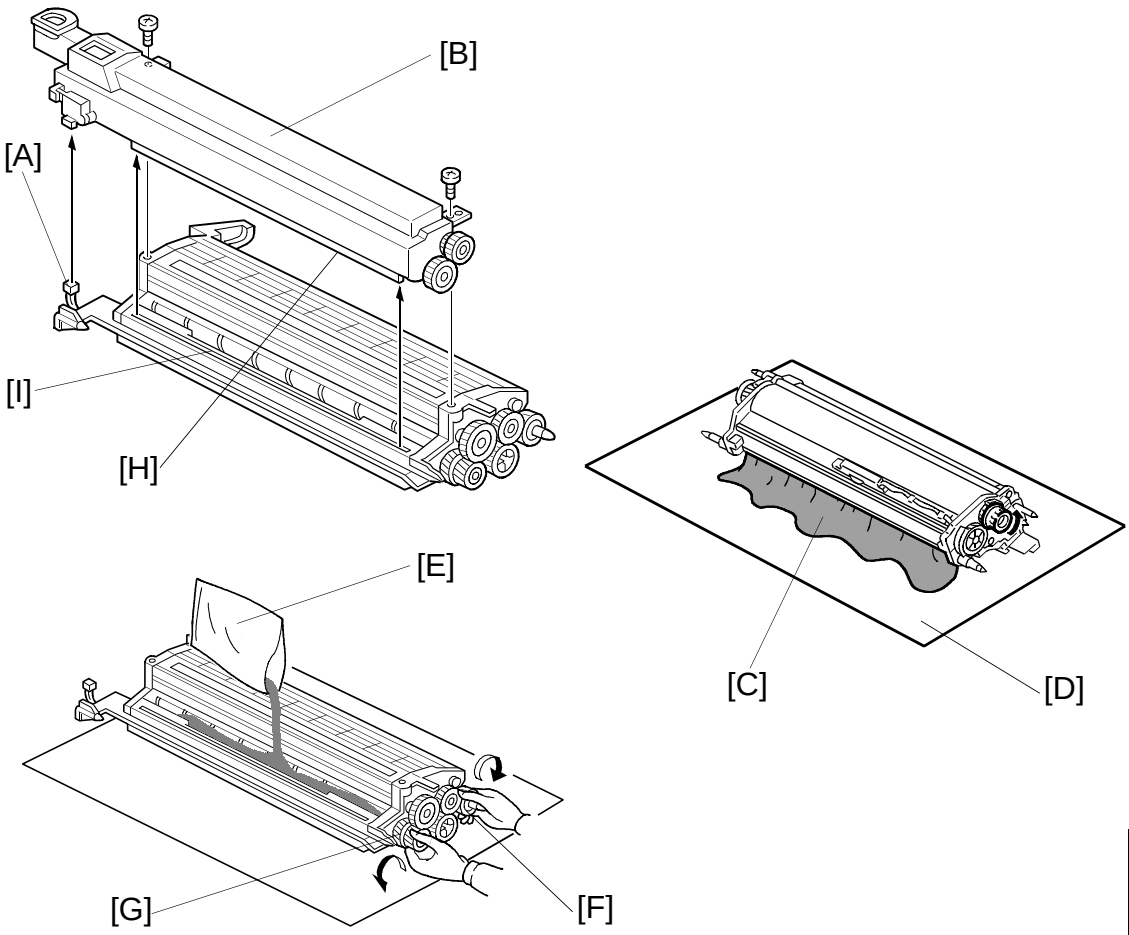

1. Take out the development unit and place it on a clean sheet. (See Development Unit Removal.)
2. Disconnect the connector [A] and separate the toner supply unit [B] from the development unit (2 screws).
3. Turn over the development unit and empty all the developer [C] onto the sheet [D]. Make sure that no developer remains on the development roller or in the unit.

   NOTE: Dispose of the used developer in accordance with local regulations.

4. Pour about half a pack of developer [E] into the development unit. Then rotate the two outer gears [F] and [G] as shown to distribute the developer evenly. Then pour in all the remaining developer and rotate the gears again.

   NOTE: Do not rotate the gears in the other direction, or developer will spill out.

5. Remount the toner supply unit on the development unit (2 screws) and reconnect the connector.

   NOTE: Make sure that the positioning rib [H] sits in the groove [I].

6. Install the development unit in the copier (1 knob screw and 1 connector).

7. Turn on the main switch, then perform the TD sensor initial setting for new developer using SP2-214.

! CAUTION

Never make any copy with the new developer before completing the TD sensor initial setting (SP2-214). Otherwise toner density control will be abnormal.

3.3 TONER SUPPLY MOTOR REPLACEMENT

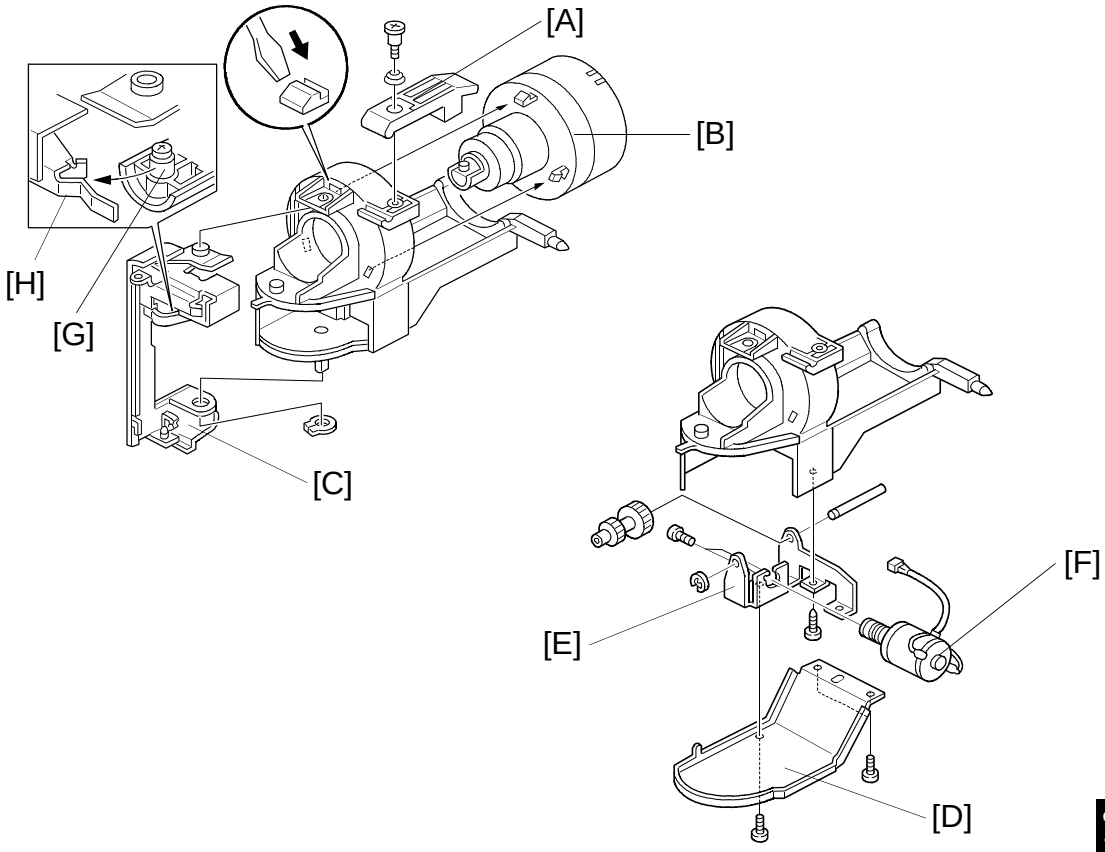

1. Turn off the main switch and open the front cover.
2. Swing out the bottle holder and remove the toner bottle.
3. Remove the bottle holder from the copier (1 screw, 1 knob screw, and 1 connector).
4. Remove the bottle locking lever [A] (1 shoulder screw and 1 spring).
5. Remove the bottle rotating cover [B] by releasing the three hooks.
6. Remove the hinge bracket [C] from the bottle holder (1 C-ring).
7. Remove the bottom cover [D] (3 screws).
8. Remove the toner supply motor bracket [E] (1 screw) and replace the toner supply motor [F] (1 E-ring and 1 gear shaft).

NOTE: When reinstalling the hinge bracket on the bottle holder, make sure that the roller [G] slides into the notch [H] between the two guide rails as shown.

4. AROUND THE DRUM

4.1 DRUM UNIT REMOVAL

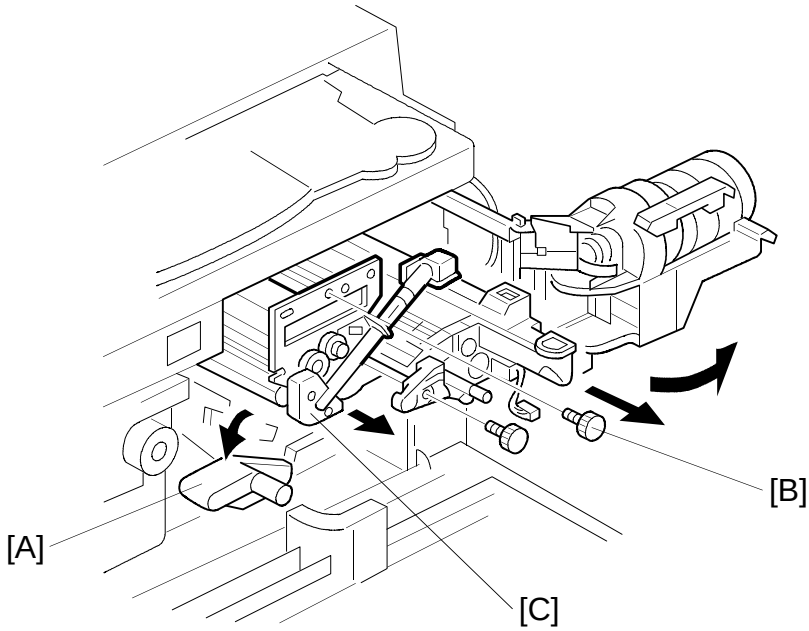

1. Open the front cover and remove the development unit.
   (See Development Unit Removal.)
2. Turn the "A1" lever [A] counterclockwise to lower the transfer belt unit.
3. Remove the knob screw [B].
4. Remove the drum unit [C].

NOTE: 1. Insert a clean sheet of paper between the drum and the drum charge roller and wrap the drum up with the paper. Doing so prevents the drum charge roller from sticking to the drum. Also, the paper protects the drum from light fatigue.
2. Place the drum unit on a clean sheet of paper.

4.2 DRUM REPLACEMENT

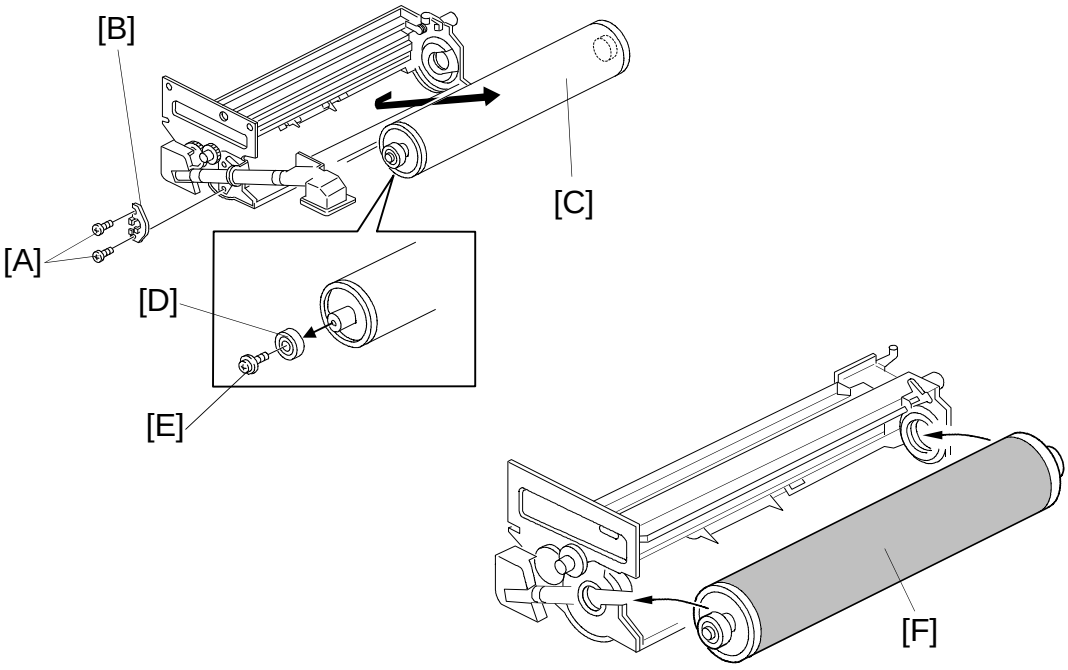

1. Pull out the drum unit from the copier. (See Drum Unit Removal.)
2. Remove the drum charge roller ass'y (see Drum Charge Roller Replacement).
3. Loosen the two screws [A] and remove the bearing holder [B].
4. While holding the front and rear ends of the drum, remove the drum [C] from the drum unit by lifting it up.
5. Remove the bearing [D] (1 screw [E]) from the old drum and install it on the new drum. Also, remove the protective sheet from the new drum.
6. Set the new drum [F] in the unit and install the bearing holder again (2 screws).

   NOTE: 1) When setting the drum in the unit, be careful not to strike it against the rail.

   2) Do not bend the bearing holder. Make sure the bearing holder is in contact with the bearing, as they are both used to ground the unit. If they are not in contact, solid black copies may occur.

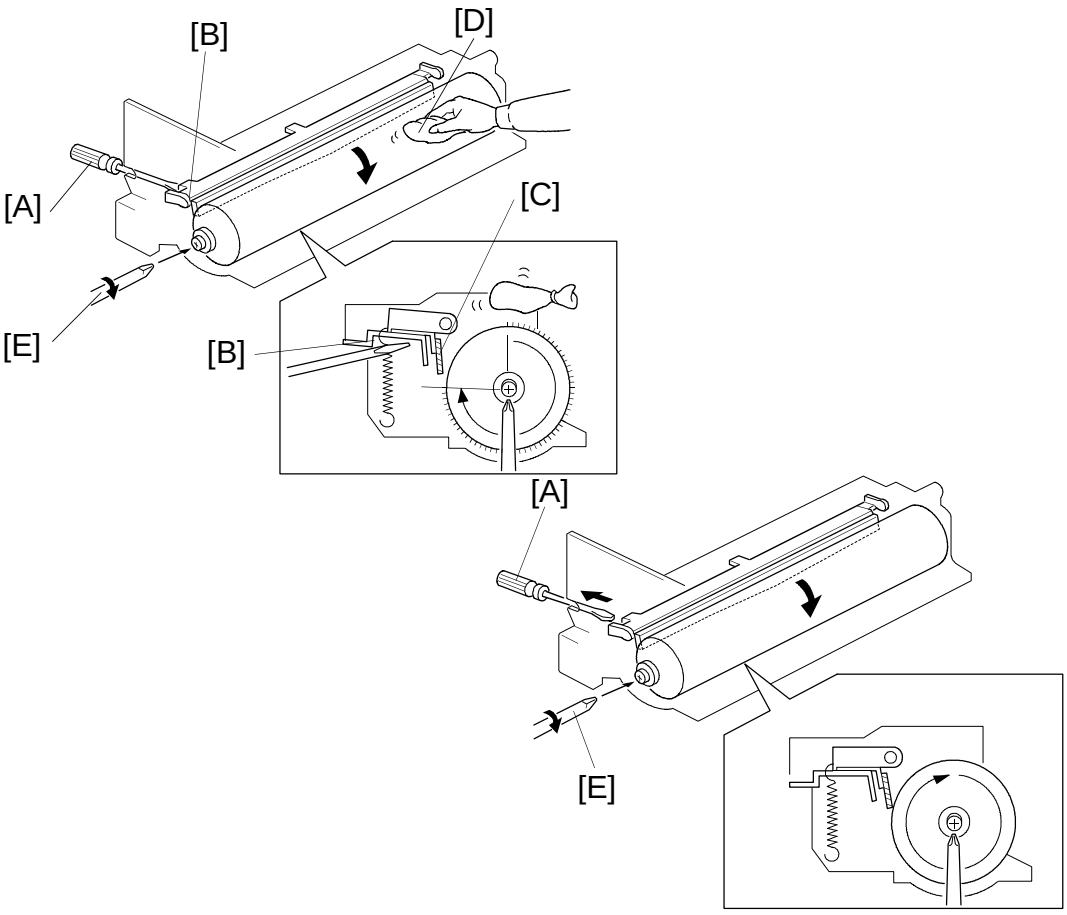

7. Insert a small screwdriver [A] under the cleaning blade release lever [B] to release the cleaning blade [C].
8. Apply setting powder [D] to the surface of the drum, and rotate the drum with another screwdriver [E] until the area covered with setting powder has almost reached the cleaning blade.
9. Remove the small screwdriver [A] so that the cleaning blade will press against the drum. Then rotate the drum clockwise with the screwdriver [E]. Check whether the drum rotates smoothly without catching the blade (if it does not, repeat steps 7 to 9).
10. Reinstall the drum charge roller ass'y on the drum unit (2 screws, 1 connector).

    NOTE: Before reinstalling the drum charge roller assy on the drum unit, be sure that no setting powder remains on the drum. If setting powder gets onto the drum charge roller, copy quality problems will occur.

4.3 PICK-OFF PAWL REPLACEMENT

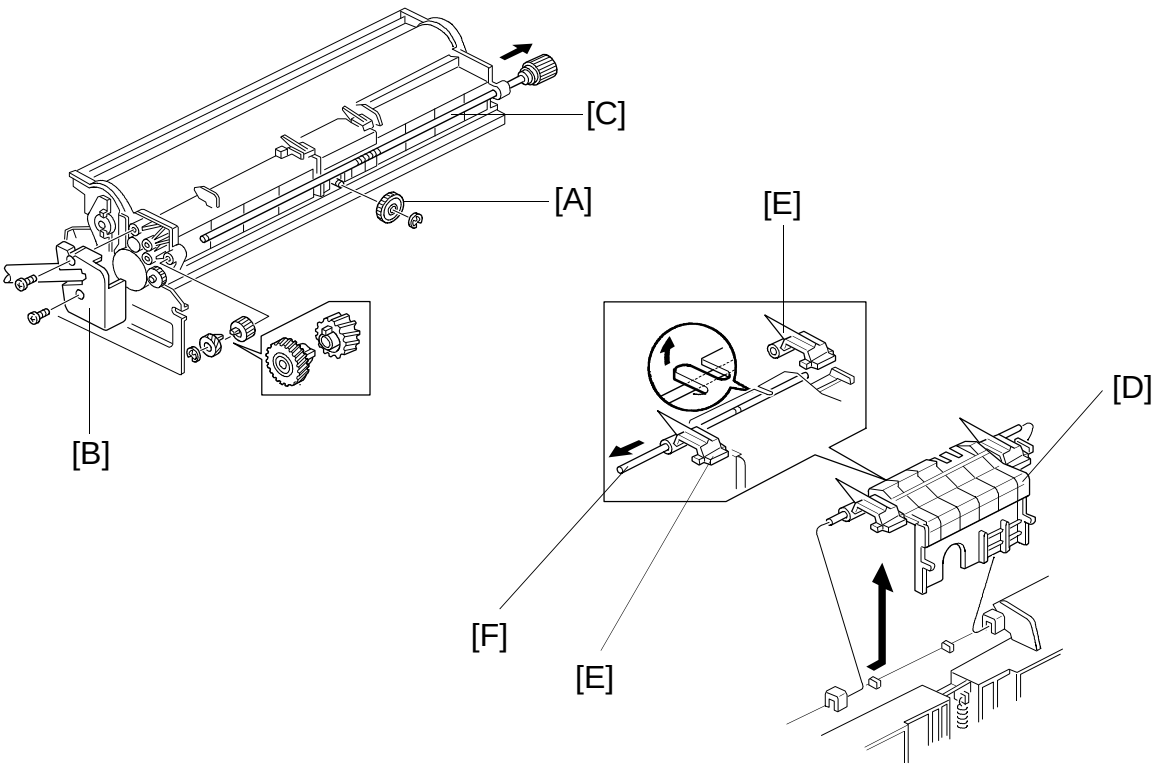

1. Remove the drum unit. (See Drum Unit Removal.)
2. Remove the gear [A] (one E-ring).
3. Remove the recycled toner transport coil ass'y [B] (2 screws).
4. Remove the shaft [C] (one E-ring and two gears).
5. Remove the pick-off pawl ass'y [D] while sliding it sideways.
6. Remove the pick-off pawls [E] (one shaft [F]).

4.4 ID SENSOR BOARD REPLACEMENT

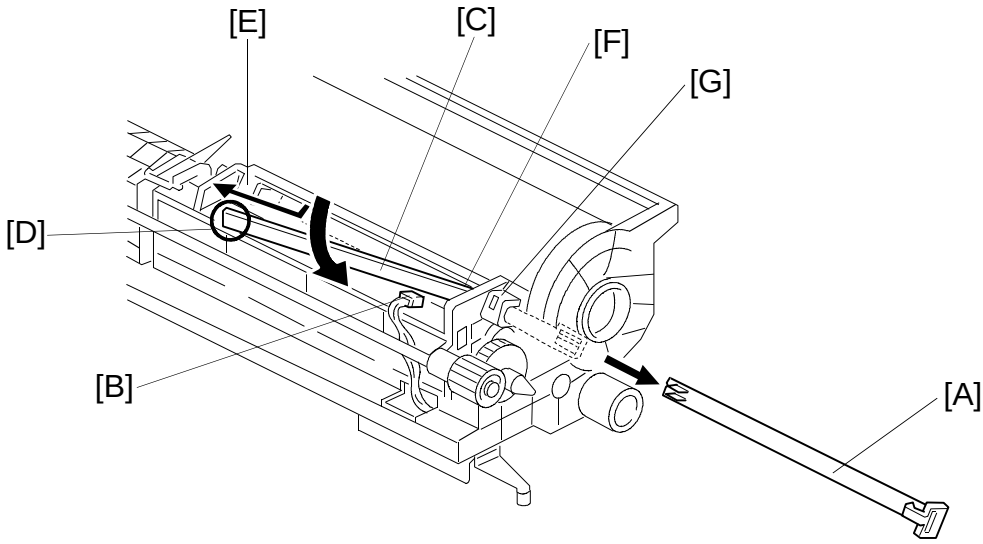

1. Remove the drum unit. (See Drum Unit Removal.)
2. Remove the ID sensor supporter [A] (one snap pawl).
3. Disconnect the connector [B].
4. Pull the ID sensor board [C] sideways and remove the end [D] from the ID sensor board holder [E].
5. Remove the other end of ID sensor board [F] from the holder [G] while rolling the ID sensor board in the direction of the arrow as shown in the diagram.
6. Remove the ID sensor board.

4.5 DRUM CLEANING BLADE REPLACEMENT

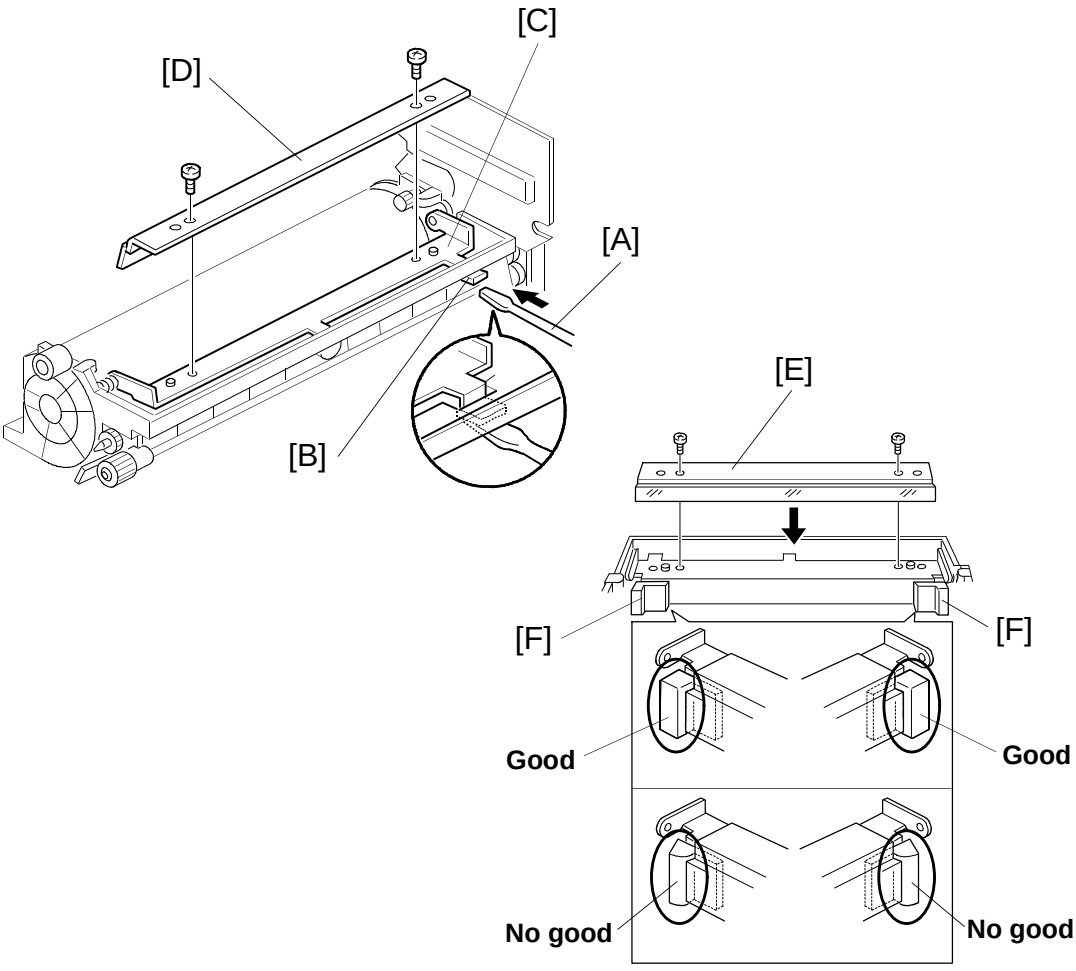

1. Remove the drum unit. (See Drum Unit Removal.)
2. Remove the drum charge roller ass'y (see Drum Charge Roller Replacement).
3. Insert a small screwdriver [A] under the cleaning blade release lever [B] to release the cleaning blade holder [C].
4. Remove the old cleaning blade [D] (2 screws).
5. Install the new cleaning blade [E] (2 screws).

NOTE: 1. Check that there is no dust on the edge of the new cleaning blade.

2. When installing the new cleaning blade, be sure not to deform the sponge seal [F] at both sides of the cleaning blade holder.

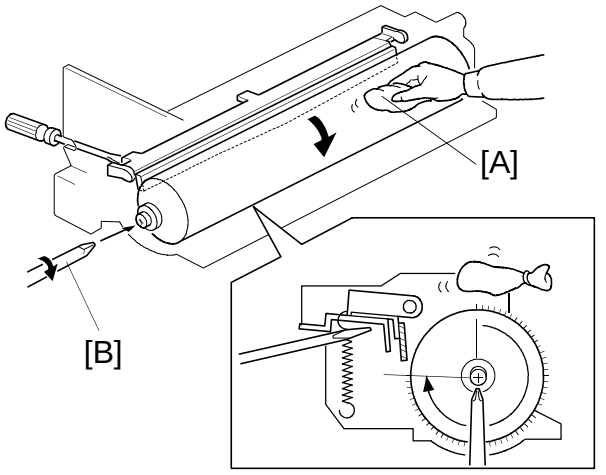

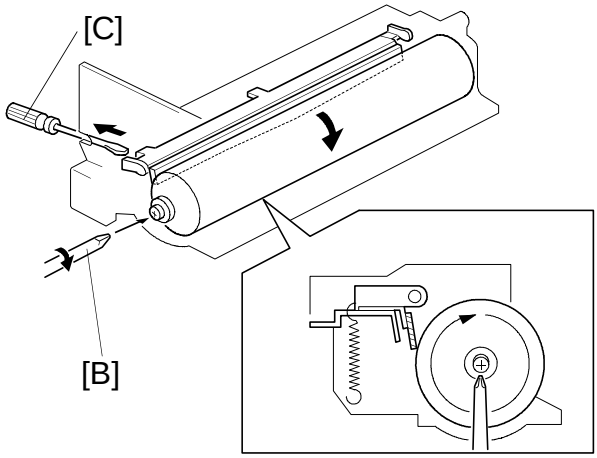

6. Apply setting powder [A] to the surface of the drum, and rotate the drum with another screwdriver [B] clockwise until the area covered with setting powder has almost reached the cleaning blade.

7. Remove the small screwdriver [C] so that the cleaning blade will press against the drum. Then rotate the drum clockwise with the screwdriver [B]. Check whether the drum rotates smoothly without catching the blade (if it does not, repeat steps 6 and 7).

8. Reinstall the drum charge roller ass'y on the drum unit (2 screws, 1 connector).

   NOTE: Before reinstalling the drum charge roller ass'y on the drum unit, be sure that no setting powder remains on the drum. If setting powder gets onto the drum charge roller, copy quality problems will occur.

4.6 PTL BOARD REPLACEMENT

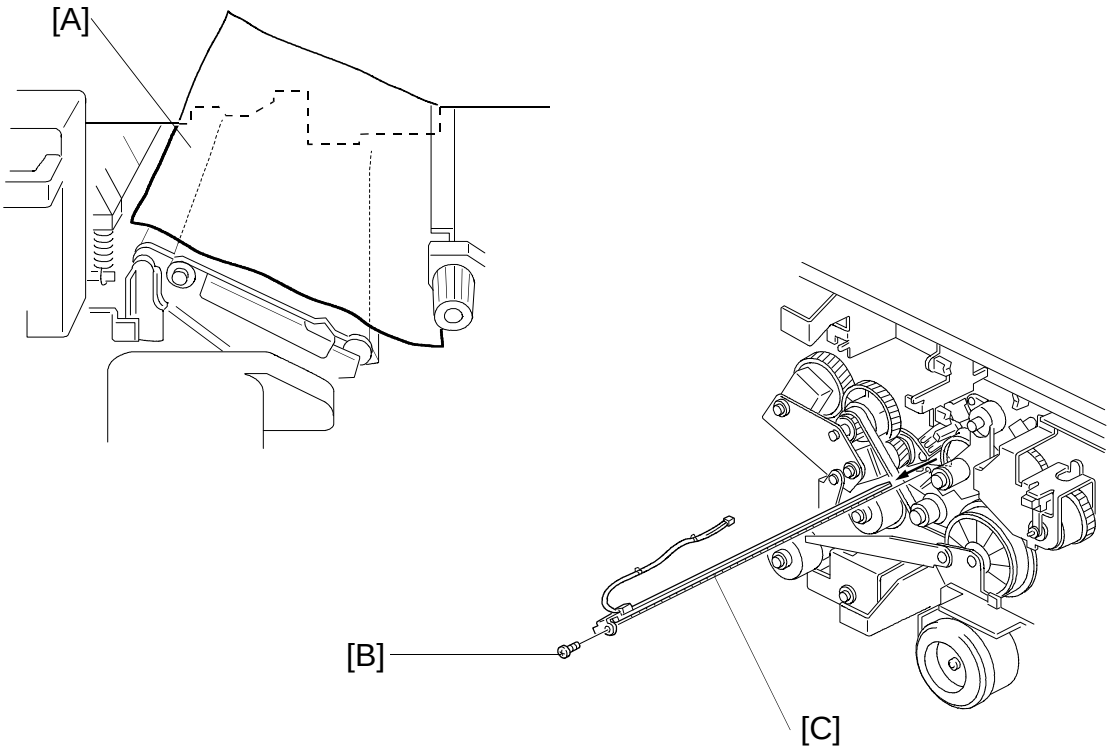

1. Remove the following parts:
   - Development unit
   - Drum unit
   - Main board

2. Lower the transfer belt unit and place a sheet of paper [A] over the transfer belt.

   NOTE: This step prevents the PTL board from damaging the transfer belt if it falls.

3. Remove the screw [B] and push the PTL board [C] halfway in from the front until its front end does not fall down.

4. Remove the PTL board [C] from the back of the copier.

4.7 QUENCHING LAMP REPLACEMENT

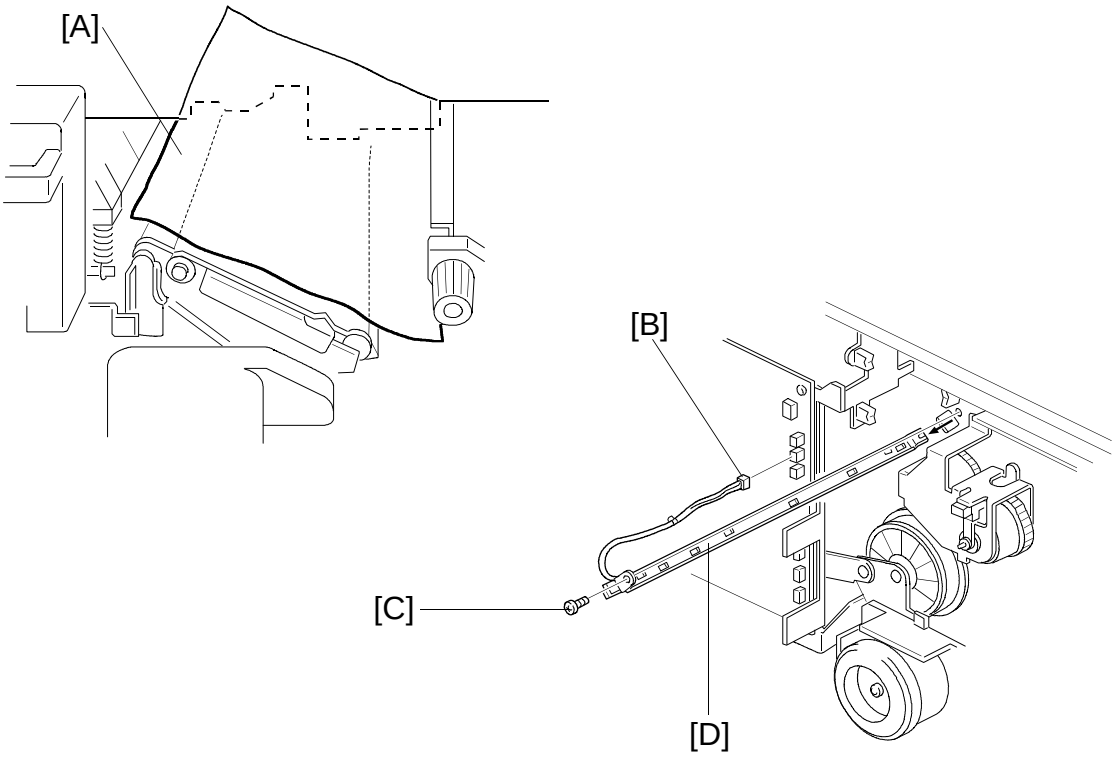

1. Remove the following parts:
   - Development unit
   - Drum unit

2. Lower the transfer belt unit and place a sheet of paper [A] over the transfer belt.

   NOTE: This step prevents the quenching lamp from damaging the transfer belt if it falls.

3. Disconnect the connector [B] (CN108) from the main board.

4. Remove the screw [C] and push the quenching lamp [D] halfway in from the front until its front end does not fall down.

5. Remove the quenching lamp [D] from the back of the copier.

4.8 ERASE LAMP REPLACEMENT

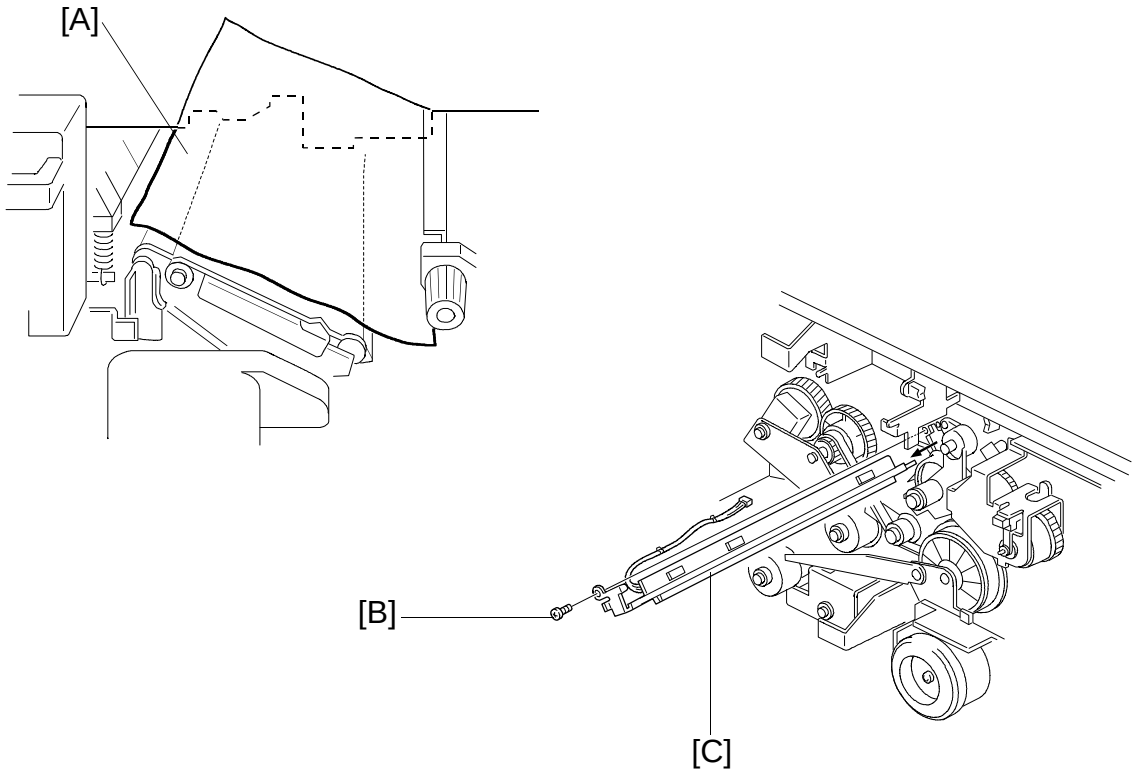

1. Remove the following parts:
   - Development unit
   - Drum unit
   - Main board

2. Lower the transfer belt unit and place a sheet of paper [A] over the transfer belt.

   NOTE: This step prevents the erase lamp from damaging the transfer belt if it falls.

3. Remove the screw [B] and push the erase lamp [C] halfway in from the front until its front end does not fall down.

4. Remove the erase lamp [C] from the back of the copier.

4.9 DRUM CHARGE ROLLER REPLACEMENT

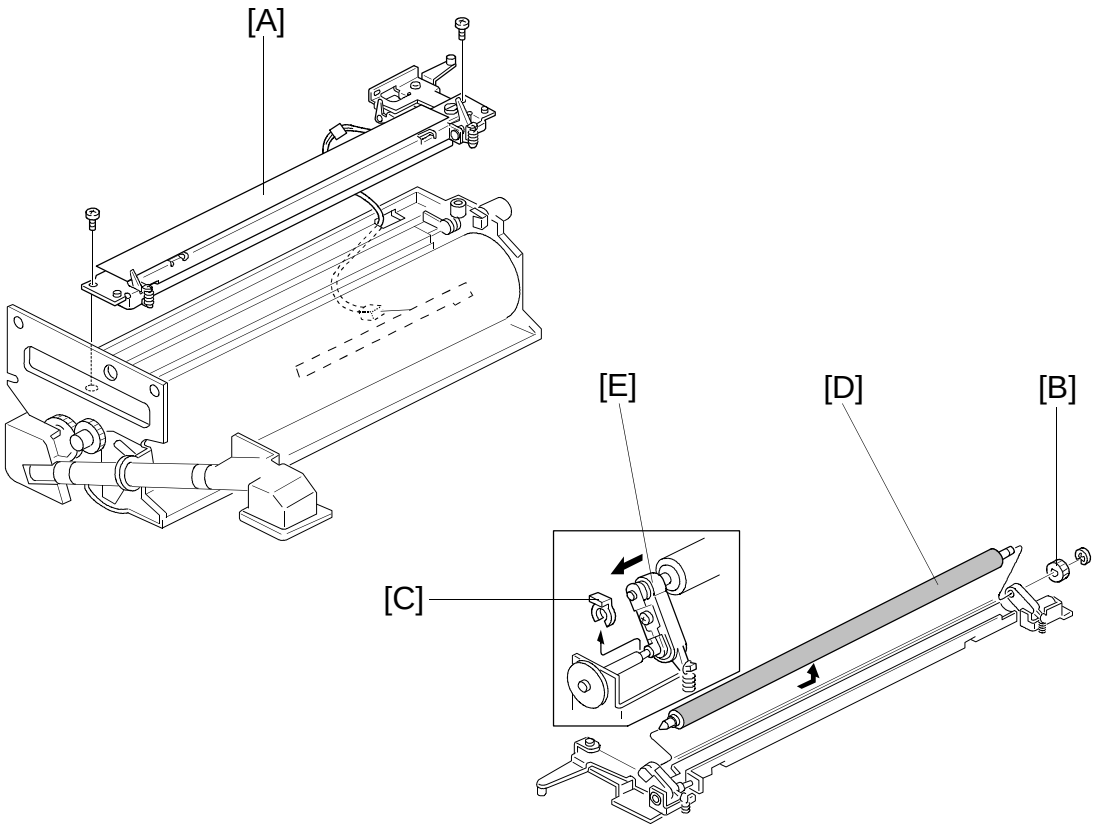

1. Remove the following parts:
   - Development unit
   - Drum unit
2. Remove the drum charge roller ass'y [A] (2 screws, 1 connector).
3. Place the drum charge roller ass'y on a clean sheet of paper as shown.
4. Remove the gear [B] (one E-ring) and remove the snap ring [C].
5. Remove the drum charge roller [D] while sliding the bearing [E] in the direction of the arrow as shown in the diagram.

NOTE: 1. Never touch the surface of the drum charge roller.
2. If there is any dirt on the surface of drum charge roller, wipe it off with a dry cloth or a special cloth for the drum charge roller. (The special cloth is available as a service part: A1539004) **Never use alcohol or water to clean the drum charge roller.**

4.10 DRUM CHARGE ROLLER TERMINAL REPLACEMENT

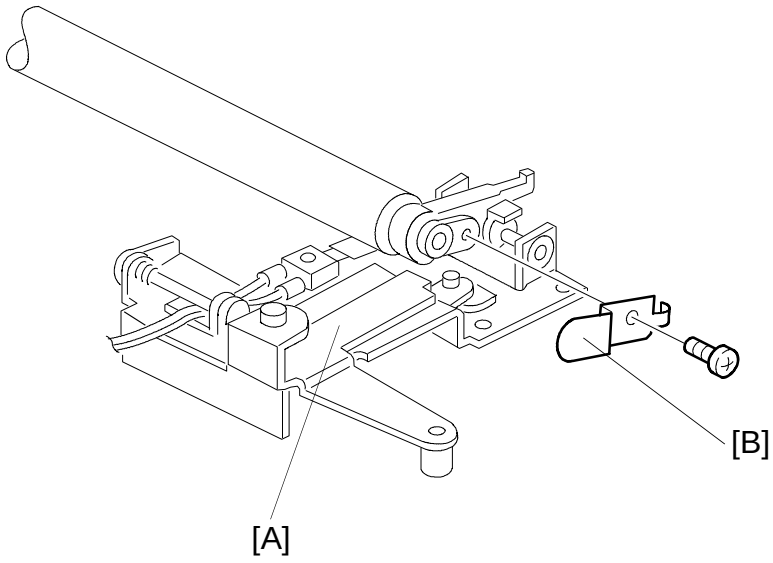

1. Remove the drum charge roller ass'y.
2. Place the drum charge roller ass'y [A] on a clean sheet of paper.
3. Remove the drum charge roller terminal [B] (1 screw).

NOTE: 1. Never touch the surface of the drum charge roller.
2. If there is any dirt on the surface of the drum charge roller, wipe it off with a dry cloth or a special cloth for the drum charge roller. (The special cloth is available as a service part: A1539004.) **Never use alcohol or water to clean the drum charge roller.**

4.11 DRUM CHARGE ROLLER CLEANER REPLACEMENT

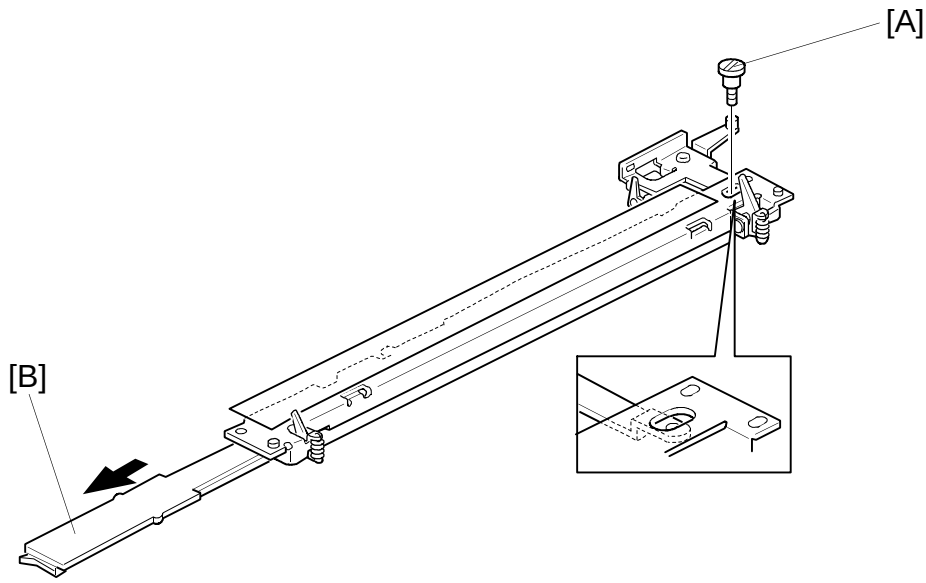

1. Remove the drum charge roller ass'y.
2. Remove the screw [A].
3. Pull out the drum charge roller cleaner [B].

5. TRANSFER BELT UNIT

5.1 TRANSFER BELT UNIT REPLACEMENT

– A153, A155, and A156 copiers –

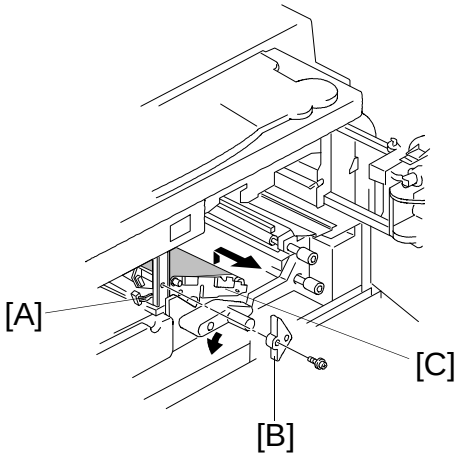

– A157, A159, and A160 copiers

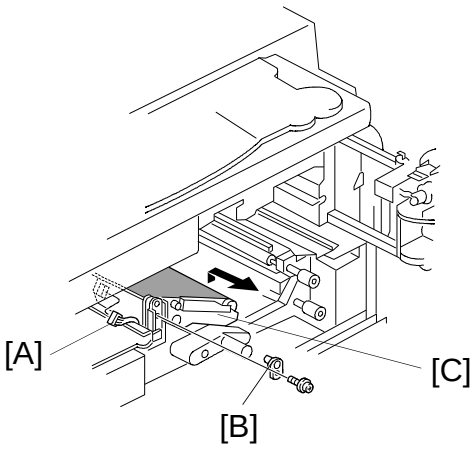

– A153, A155, and A156 copiers –

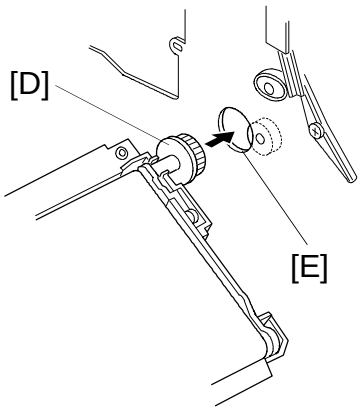

– A157, A159, and A160 copiers

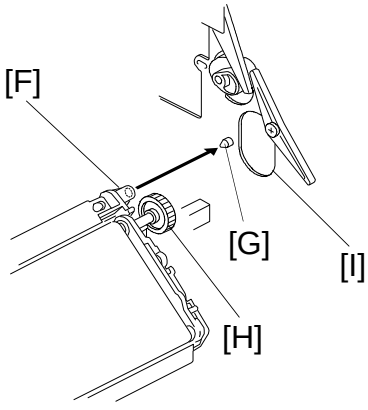

1. Remove the development unit, drum unit, and fusing unit
2. Disconnect the connector [A].
3. Remove the transfer belt positioning plate [B] (one screw).
4. Remove the transfer belt unit [C].

   NOTE: Never touch the surface of the transfer belt.
5. **A153, A155, and A156 copiers:**
   When reinstalling the transfer belt unit, align gear [D] and opening [E].
   A157, A159, and A160 copiers:
   When reinstalling the transfer belt unit, align opening [F] and positioning pin [G] first. Then align gear [H] and opening [I].

5.2 TRANSFER BELT REPLACEMENT

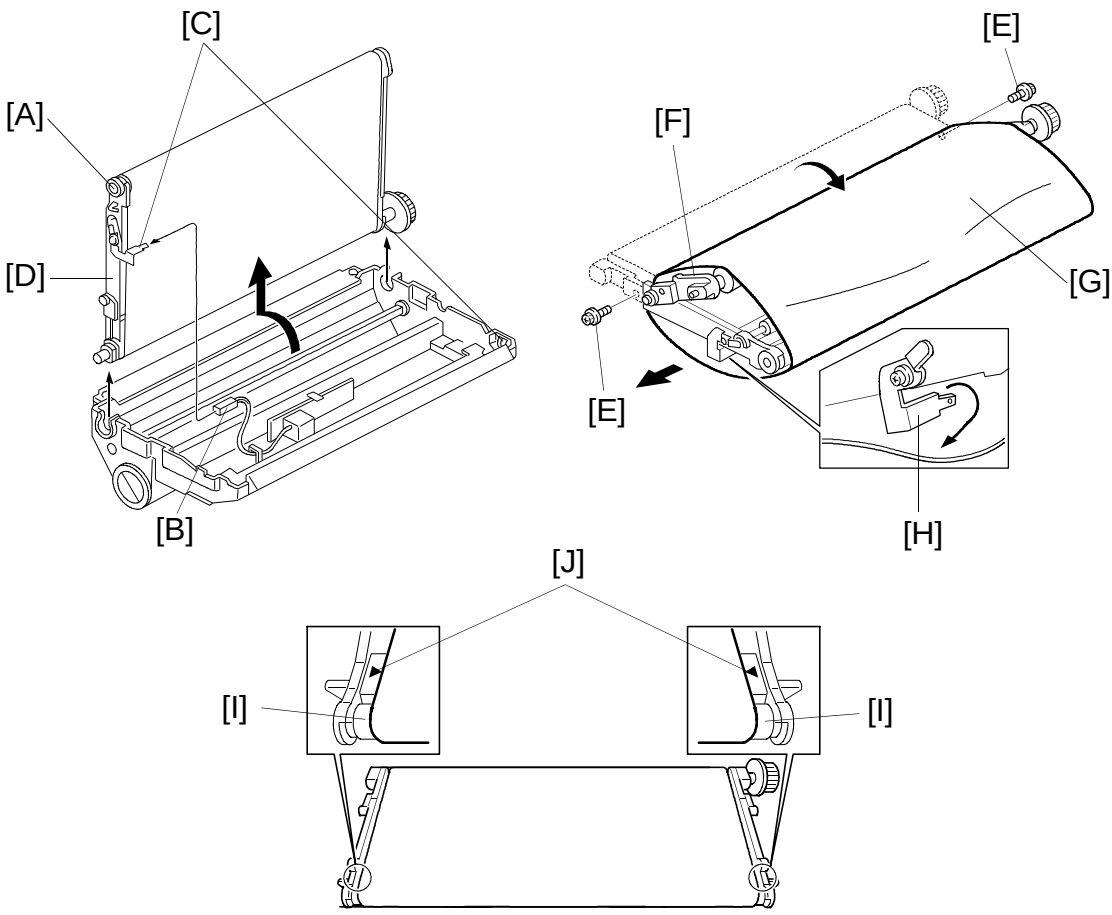

1. Remove the transfer belt unit.
2. While raising the knob [A], disconnect the connector [B].

   NOTE: 1) Never touch the transfer belt.

   2) Be careful not to bend the high voltage terminals [C].

3. Turn the transfer belt ass'y [D] 90 degrees counterclockwise, then raise it and remove it.
4. Remove the screws [E] and turn the belt drive holder [F].
5. Replace the transfer belt [G].

   NOTE: Be careful not to bend the high voltage terminal [H].

6. Position the transfer belt at the center of the belt roller [I]. (Both marks [J] should be visible.)

5.3 TRANSFER BELT CLEANING BLADE REPLACEMENT

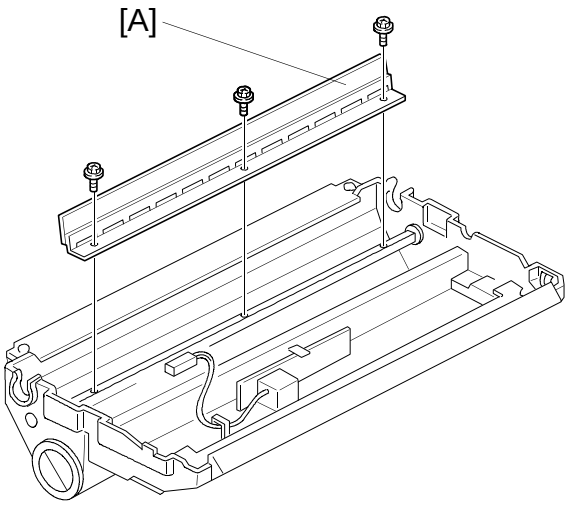

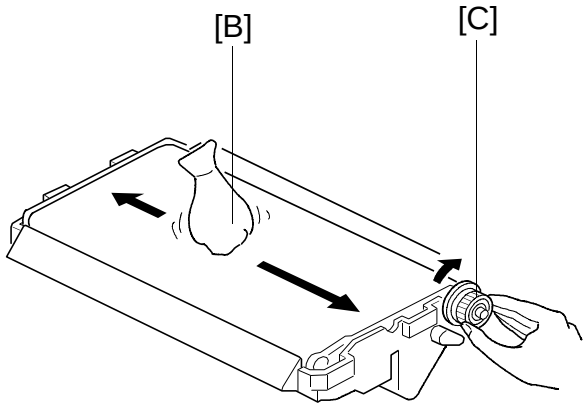

1. Remove the transfer belt ass'y. (See "Transfer Belt Unit Removal".)
2. Remove the transfer belt cleaning blade [A] (three screws).
3. Install the new transfer belt cleaning blade.
4. Reinstall the transfer belt ass'y in the transfer belt unit.
5. Apply setting powder [B] to the transfer belt.
6. Rotate the gear [C] clockwise to apply the setting powder evenly to the edge of the transfer belt cleaning blade.
7. Do steps 5 and 6 two or three times.

NOTE: Steps 5 and 6 prevent the transfer belt cleaning blade from catching the transfer belt.

5.4 DISPOSING OF COLLECTED TONER

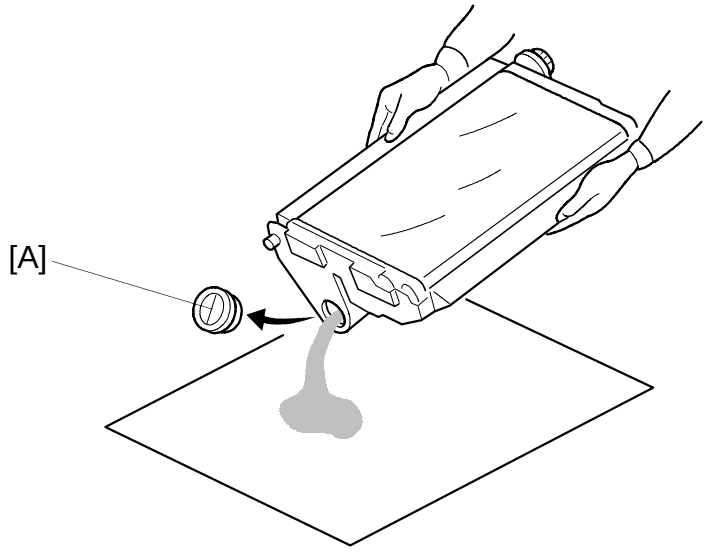

1. Remove the transfer belt unit. (See "Transfer Belt Unit Removal".)
2. Open the cap [A] and pour the collected toner slowly onto a sheet of paper so that the toner does not scatter.

   NOTE: Never use the collected toner in the transfer belt unit for toner recycling.

3. Dispose of the toner in accordance with the local regulations.

6. PAPER FEED

6.1 BY-PASS PICK-UP, FEED, AND SEPARATION ROLLERS, AND TORQUE LIMITER REPLACEMENT

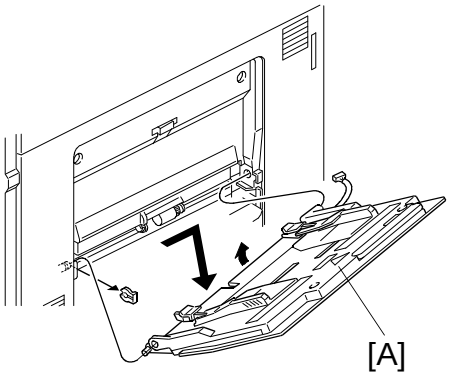

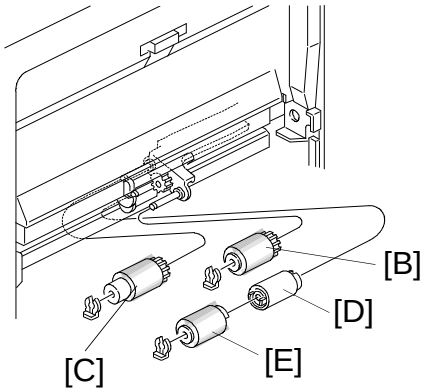

1. Remove the by-pass feed table [A] (1 clip, 1 connector).
2. Open the right door.
3. Remove the pick-up roller [B], feed roller [C], torque limiter [D], and the separation roller [E] (1 clip each).

6.2 PICK-UP, FEED, AND SEPARATION ROLLERS, AND TORQUE LIMITER REPLACEMENT (A153/A155/A156)

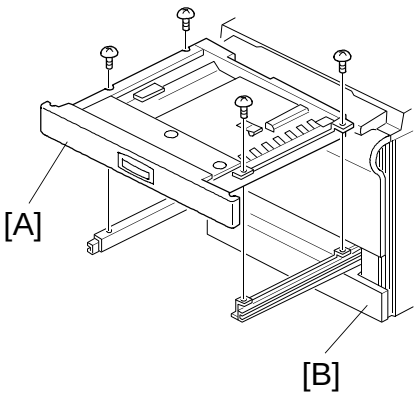

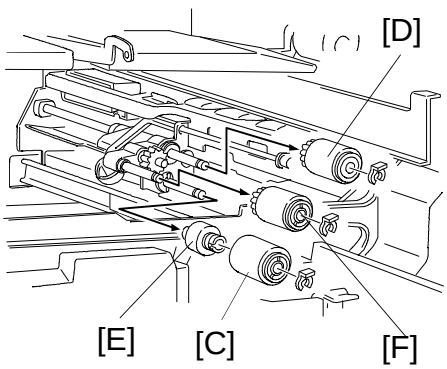

1. Remove the upper paper feed tray [A] or lower paper feed tray [B] (4 screws for each paper feed tray).
2. Remove the pick-up [C] and feed [D] rollers, torque limiter [E], and the separation roller [F] (1 clip each).

NOTE: After reinstalling the paper feed tray, perform the side-to-side registration adjustment (see Side-to-side Registration Adjustment).

6.3 LOWER PAPER FEED UNIT REPLACEMENT (A153/A155/A156)

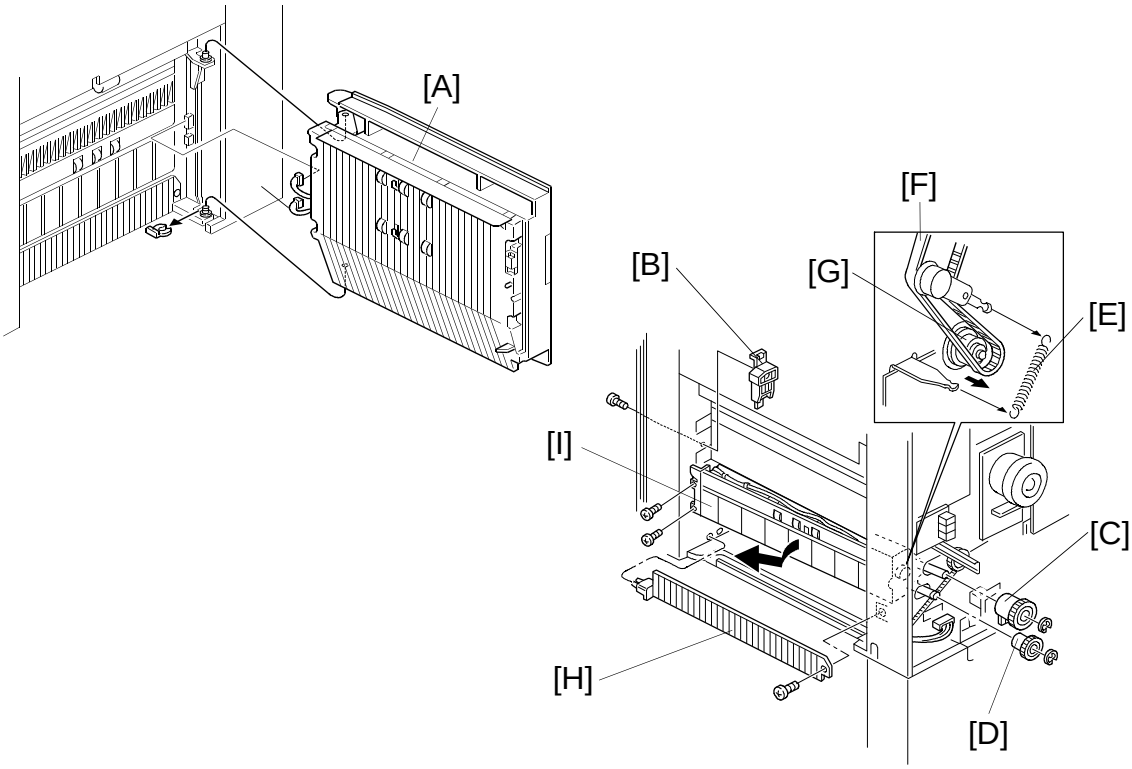

1. Remove the rear cover (see "Outer Cover Removal").
2. Remove the right door [A] (2 connectors, 1 clip) or the LCT unit (see "LCT Unit Removal").

Steps 3 through 5 are required for machines with an LCT.

3. Remove the front cover (see "Outer Cover Removal").
4. Remove the right inner cover (see "Inner Cover Removal").
5. Remove the LCT set block [B] (1 screw).
6. Remove the lower paper feed clutch [C] (1 E-ring).
7. Remove the separation roller gear [D] (1 E-ring).
8. Remove the spring [E] and remove the timing belt [F] from the relay roller pulley [G].
9. Remove the vertical transport guide plate [H] (1 screw).
10. Remove the paper feed unit [I] (2 screws, 1 connector).

6.4 UPPER PAPER FEED UNIT REPLACEMENT (A153/A155/A156)

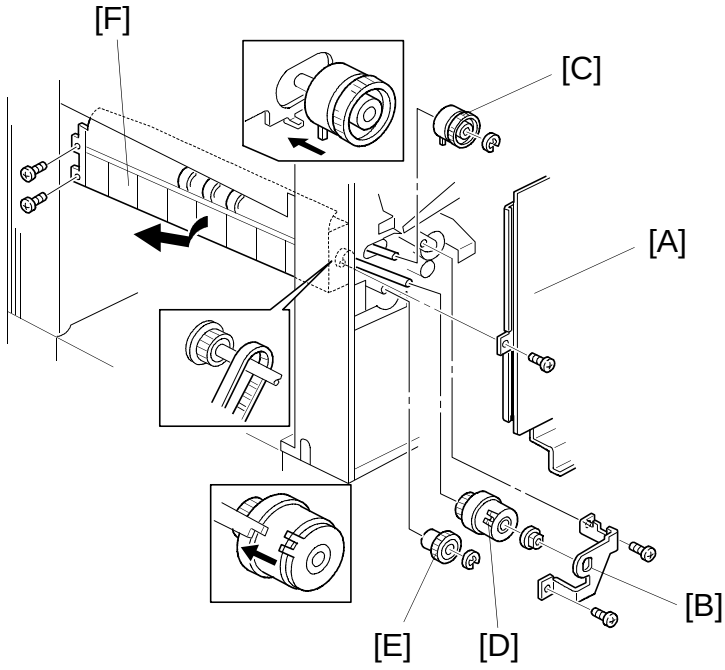

1. Remove the lower paper feed unit (see "Lower Paper Feed Unit Replacement").
2. Remove the main control board unit [A] (4 screws, all connectors).
3. Remove the bracket [B] (2 screws).
4. Remove the relay clutch [C] (1 connector, 1 bushing).
5. Remove the upper paper feed clutch [D] (1 E-ring, 1 connector).
6. Remove the separation roller drive gear [E] (1 E-ring).
7. Remove the upper paper feed unit [F] (2 screws, 1 connector).

6.5 PAPER FEED ROLLER REPLACEMENT (A157/A159/A160)

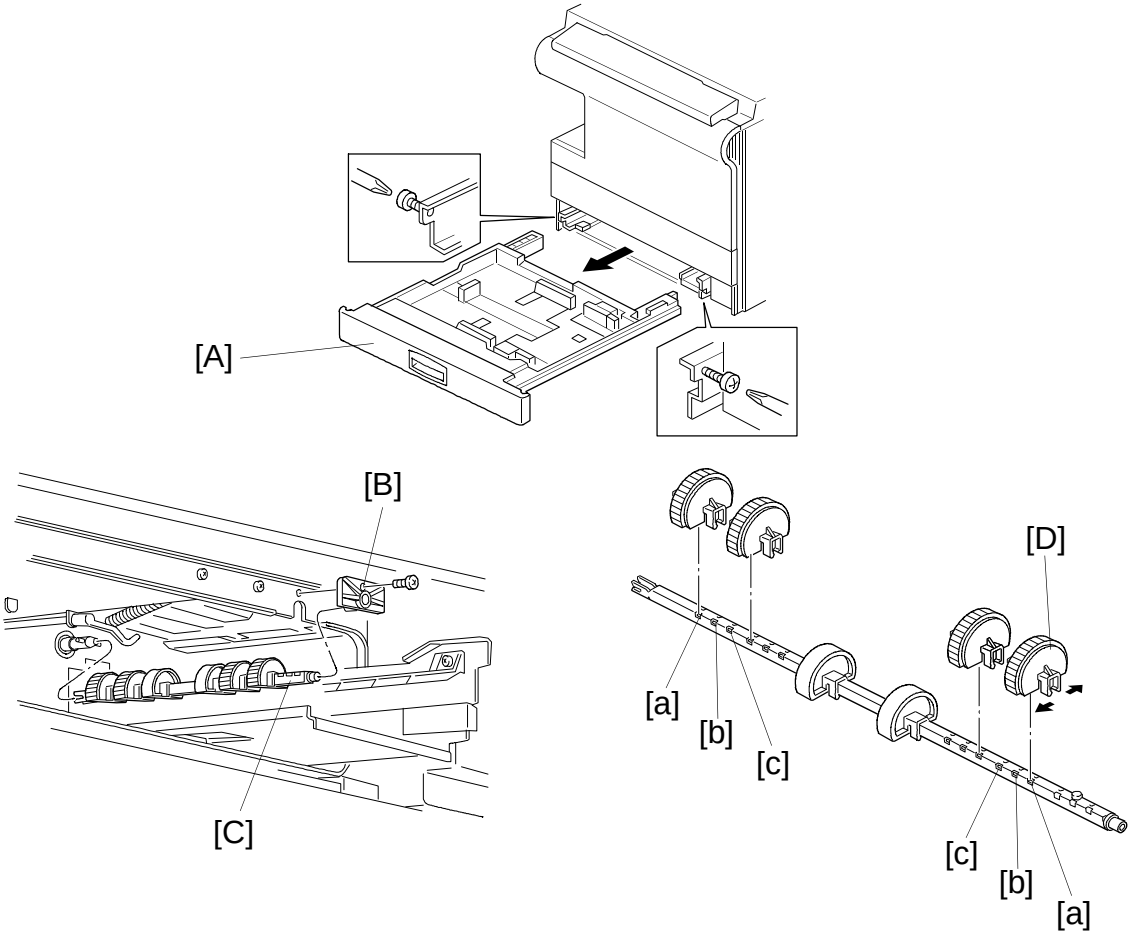

1. **A157/A159 copiers only:** Remove the front cover (see "Outer Cover Removal").
2. Remove the paper feed tray [A] (2 screws).
3. Remove the stopper bracket [B] (1 screw).
4. Remove the feed roller assembly [C].
5. Remove the feed roller [D].

NOTE: 1) When installing the feed roller assembly, the flat side of the roller should be facing down.
2) The two rollers without rubber should be at the center of the shaft.
3) The factory-set roller position is [a].
4) Roller position [b] is only used in Japanese models.
4) Roller position [c] is especially useful for B size paper. When paper jam or non-feed occurs often with B size paper, change the feed roller position to [c].

6.6 REGISTRATION SENSOR REPLACEMENT

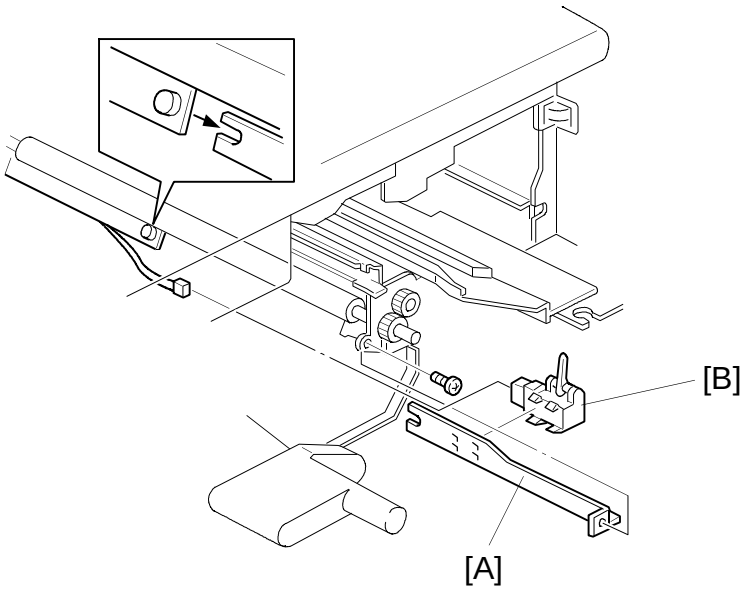

1. Remove the front cover (see "Outer Cover Removal").
2. Remove the lower right inner cover (see "Inner Cover Removal").
3. Remove the transfer belt assembly (see "Transfer Belt Unit Removal").
4. Remove the registration sensor bracket [A] (1 screw, 1 connector).
5. Remove the registration sensor [B].

6.7 PAPER FEED CLUTCH REPLACEMENT (A157/A159/A160)

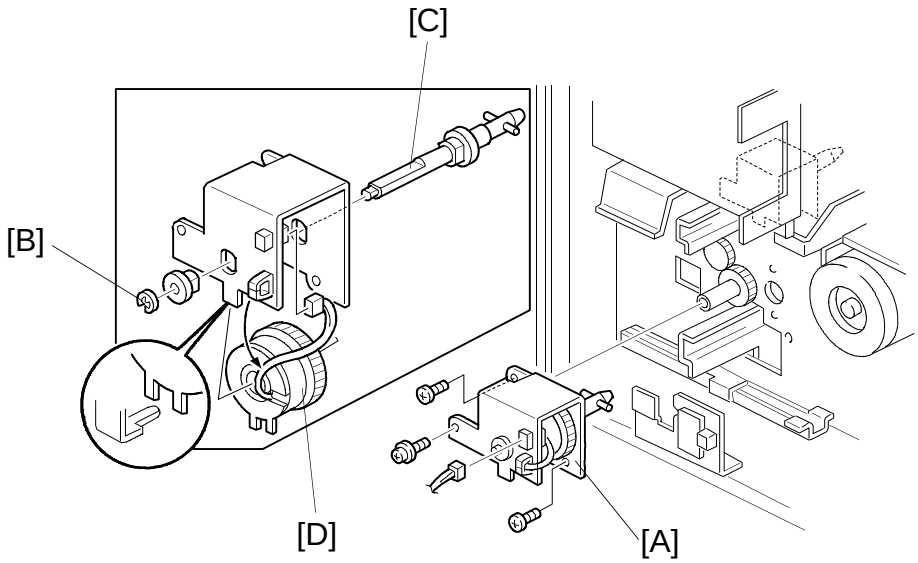

1. Remove the paper feed roller assembly (see "Paper Feed Roller Replacement").
2. Remove the rear cover (see "Outer Cover Removal").
3. Remove the paper feed clutch assembly [A] (3 screws, 1 connector).
4. Remove one E-ring [B] and the pull out the shaft [C].
5. Remove the paper feed clutch [D] (1 connector).

7. LCT

7.1 LCT UNIT REMOVAL

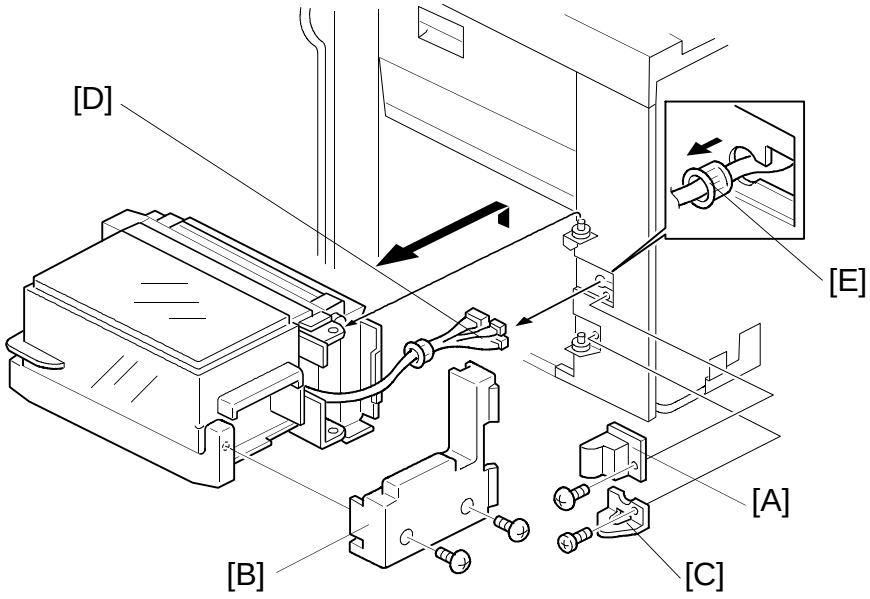

1. Remove the rear cover (see "Outer Cover Removal").
2. Remove the harness cover [A] (1 screw).
3. Remove the LCT's rear cover [B] (2 screws).
4. Remove the stopper bracket [C] (1 screw).
5. Disconnect five connectors [D] and remove the harness bushing [E].
6. Remove the LCT.

7.2 LCT DRIVE BELT REPLACEMENT

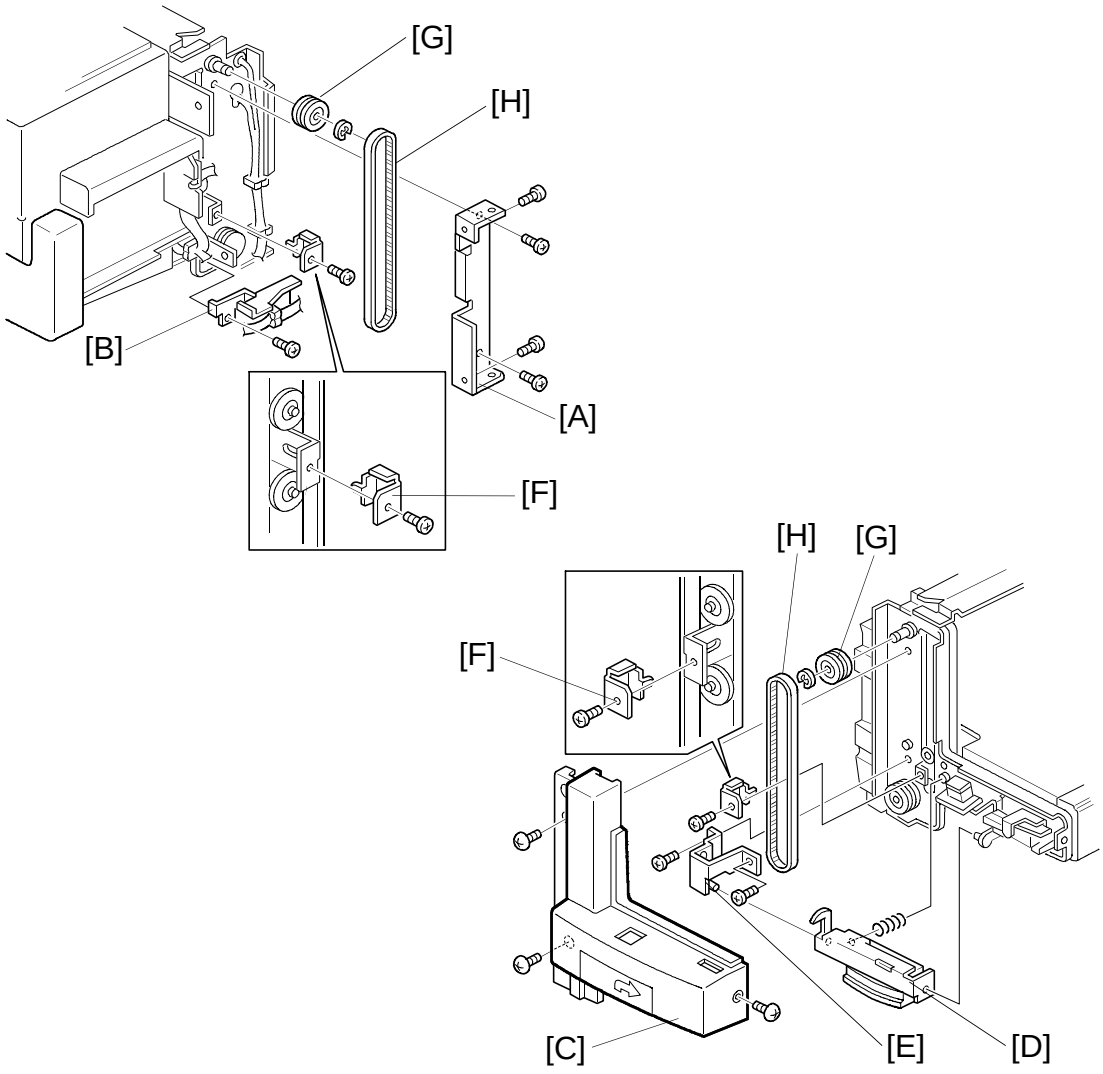

1. Remove the LCT unit (see "LCT Unit Removal").
2. Remove the upper belt cover [A] (4 screws).
3. Remove the lower belt cover [B] (1 screw).
4. Remove the front cover [C] (3 screws).
5. Remove the grip holding bracket [D] and grip bracket [E] (2 screws).
6. Remove the belt stoppers [F] (1 screw each).
7. Remove the upper pulley [G] and LCT drive belt [H] (1 E-ring each).

NOTE: When reinstalling the belt stoppers, make sure that the LCT bottom plate is at the bottom.

7.3 LCT MOTOR REPLACEMENT

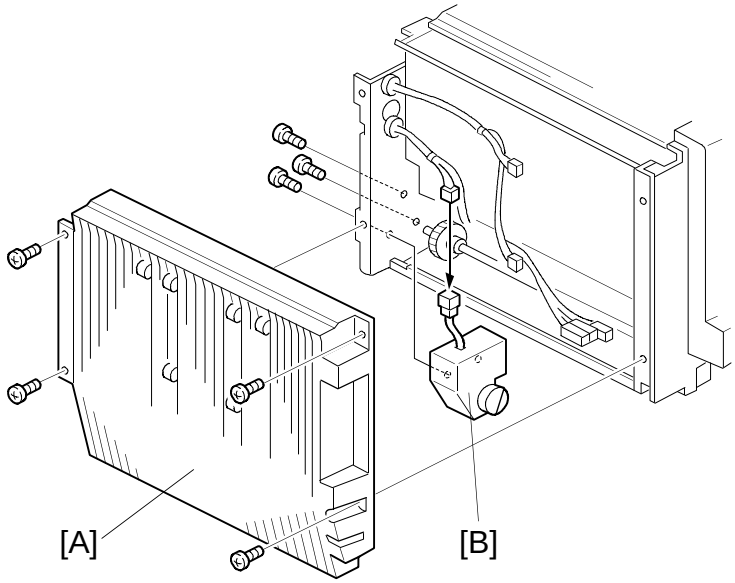

1. Remove the LCT (see "LCT Unit Removal").
2. Remove the vertical transport guide [A] (4 screws).
3. Remove the LCT motor [B] (3 screws, 1 connector).

8. FUSING

8.1 FUSING UNIT REMOVAL

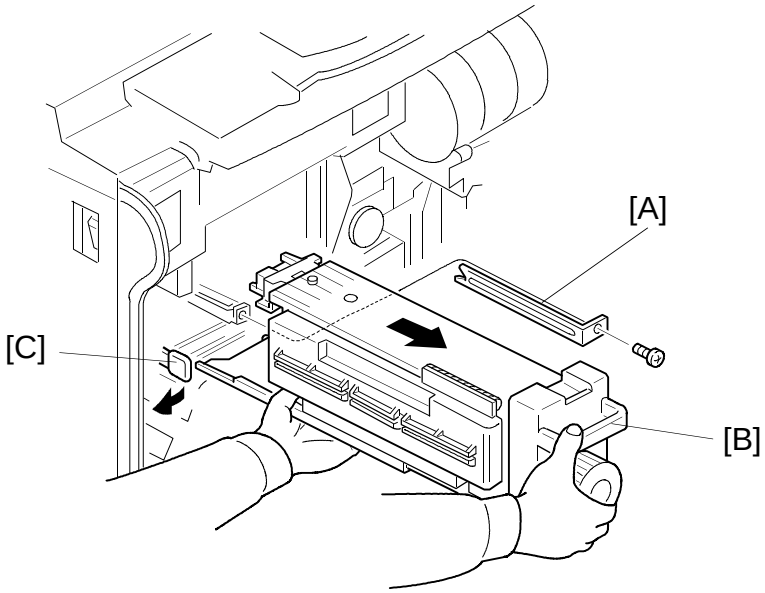

1. Open the front cover.
2. Remove the stopper bracket [A] (1 screw).
3. Hold the fusing unit cover [B] while pushing the release lever [C] to the left, and pull out the fusing unit until it stops.
4. Push the release lever again, and remove the fusing unit completely.

! CAUTION

Before completely removing the fusing unit, support the bottom of the fusing unit.

8.2 FUSING LAMP REPLACEMENT

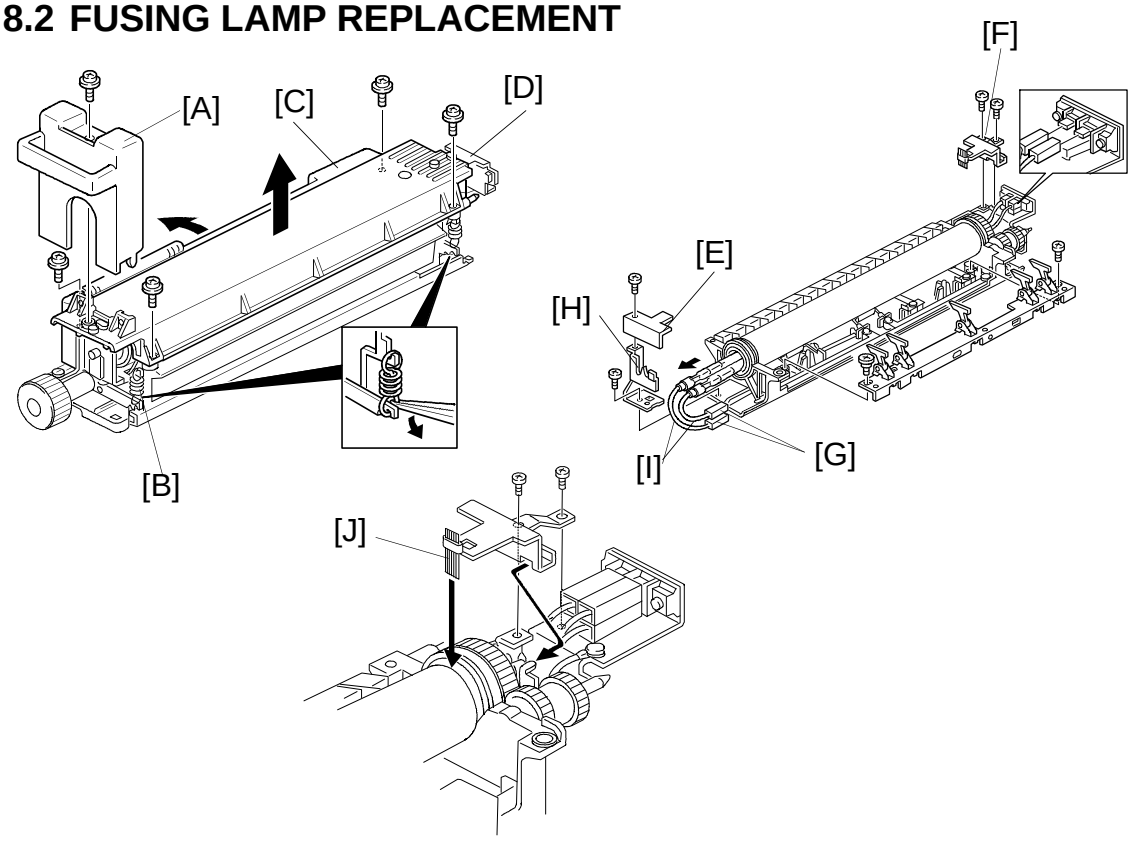

1. Remove the fusing unit (see "Fusing Unit Removal").
2. Remove the fusing front cover [A] (1 screw).
3. Remove the pressure springs [B].
4. Open the fusing exit cover [C] and remove the fusing upper unit [D] (4 screws).
5. Remove the upper front lamp holder [E] (1 screw).
6. Remove the rear lamp holder [F] (2 screws).
7. Disconnect the lamp connectors [G].
8. Remove the lower front lamp holder [H] (1 screw) and remove the two lamps [I].

NOTE: 1) Do not touch the fusing lamps with bare hands.
2) When reinstalling the rear lamp holder, make sure that the antistatic brush [J] contacts the hot roller and pressure roller shown.
3) The standard pressure spring position is at the upper position.

8.3 HOT ROLLER REPLACEMENT

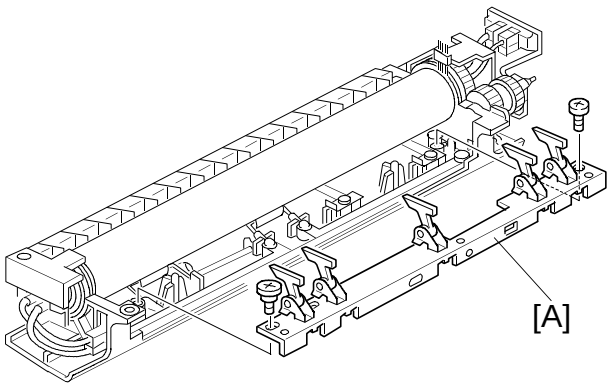

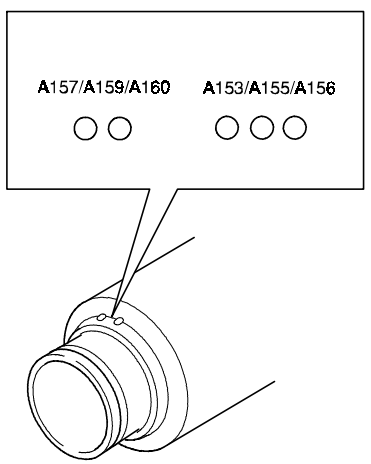

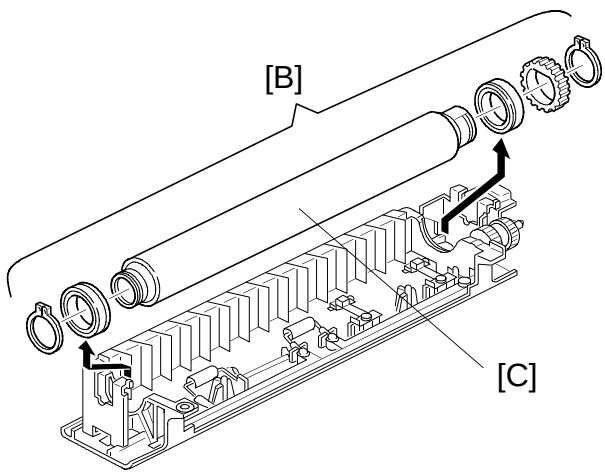

1. Remove the fusing lamps (see "Fusing Lamp Replacement").
2. Remove the hot roller stripper bracket [A] (2 screws).
3. Remove the hot roller assembly [B].
4. Replace the hot roller [C] (2 C-rings, 1 gear, 2 bearings).

NOTE: 1) Before installing the hot roller, peel off 3 cm (1 inch) from both ends of the protective sheet on the new one.
2) The standard pressure spring position is at the upper position.

! CAUTION

The hot rollers for the A153/155/156 are different from the hot rollers for the A157/159/160. To distinguish between the two types of hot roller, look at the end of the roller. The A153/155/156 roller has three small dot-like indentations at one end, and the A157/159/160 has two. Do not confuse the two, or the machine may be damaged.

8.4 PRESSURE ROLLER AND CLEANING ROLLER REPLACEMENT

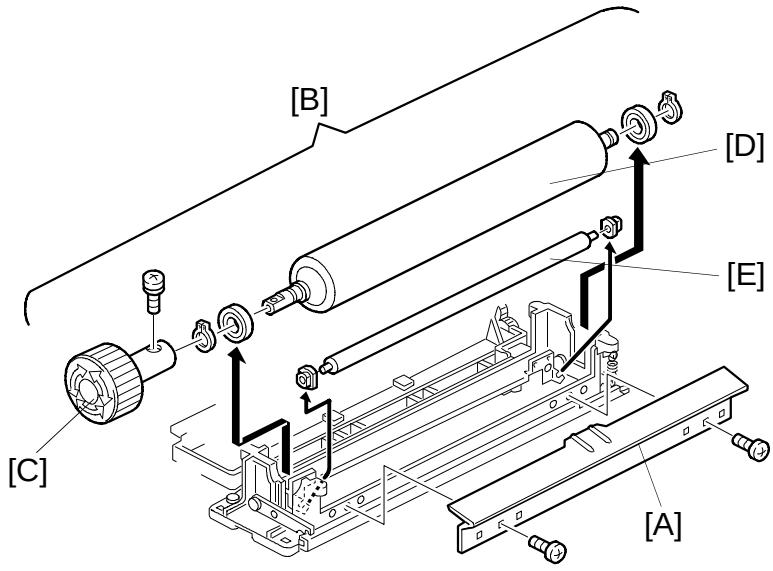

1. Remove the fusing unit (see "Fusing Unit Removal").
2. Remove the pressure springs and remove the lower fusing unit (4 screws).
3. Remove the lower fusing entrance guide [A] (2 screws).
4. Remove the pressure roller assembly [B].
5. Remove the fusing knob [C]
6. Replace the pressure roller [D] (2 C-rings, 2 bearings).
7. Replace the cleaning roller [E] (2 bushings).

NOTE: 1) When reinstalling the fusing entrance guide, tighten the screws while pushing the guide plate up to the upper position (for standard or thin paper). For thick paper, let the entrance guide plate drop to the lowest position.

2) The standard pressure spring position is at the upper position.

8.5 THERMISTOR REPLACEMENT

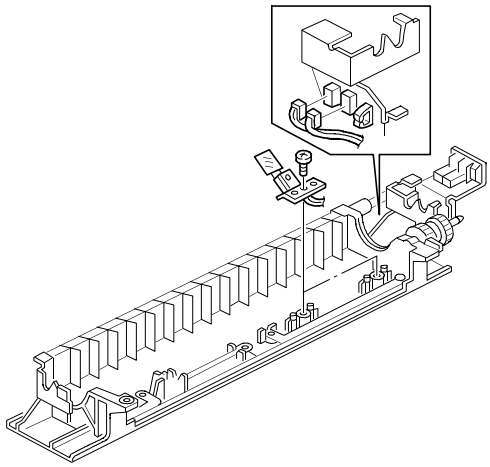

1. Remove the fusing unit (see "Fusing Unit Removal").
2. Remove the hot roller assembly (see "Hot Roller Replacement").
3. Remove the thermistor [A] (1 screw, 1 connector).

NOTE: The standard pressure spring position is at the upper position.

8.6 THERMOFUSE REPLACEMENT

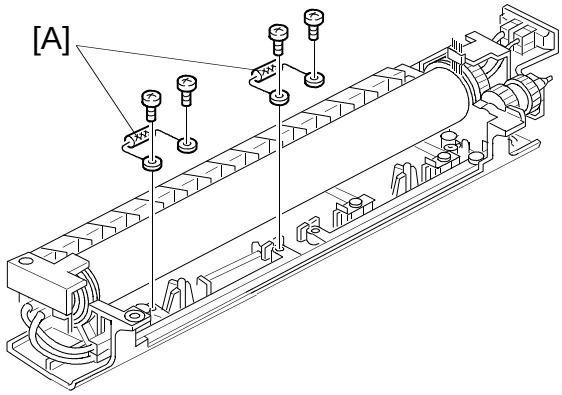

1. Remove the fusing unit (see "Fusing Unit Removal").
2. Remove the pressure springs and remove the upper fusing unit (4 screws).
3. Remove the thermofuse [A] (2 screws).

NOTE: 1) When replacing the thermofuse, make sure that you do not damage the hot roller.
2) The standard pressure spring position is at the upper position.

9. DUPLEX UNIT

9.1 FRICTION ROLLER REPLACEMENT

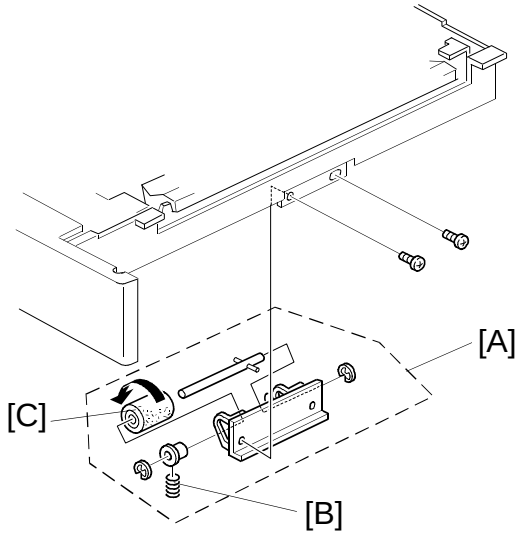

1. Remove the duplex unit (4 screws).
2. Remove the separation roller assembly [A] (2 screws).
3. Remove the springs [B].
4. Remove the friction roller [C] (2 E-rings, 2 bushings).

NOTE: This friction roller has a one-way clutch. Be sure to install the roller so that it rotates in the direction of the arrow (see the illustration).

9.2 DUPLEX FEED ROLLER REPLACEMENT

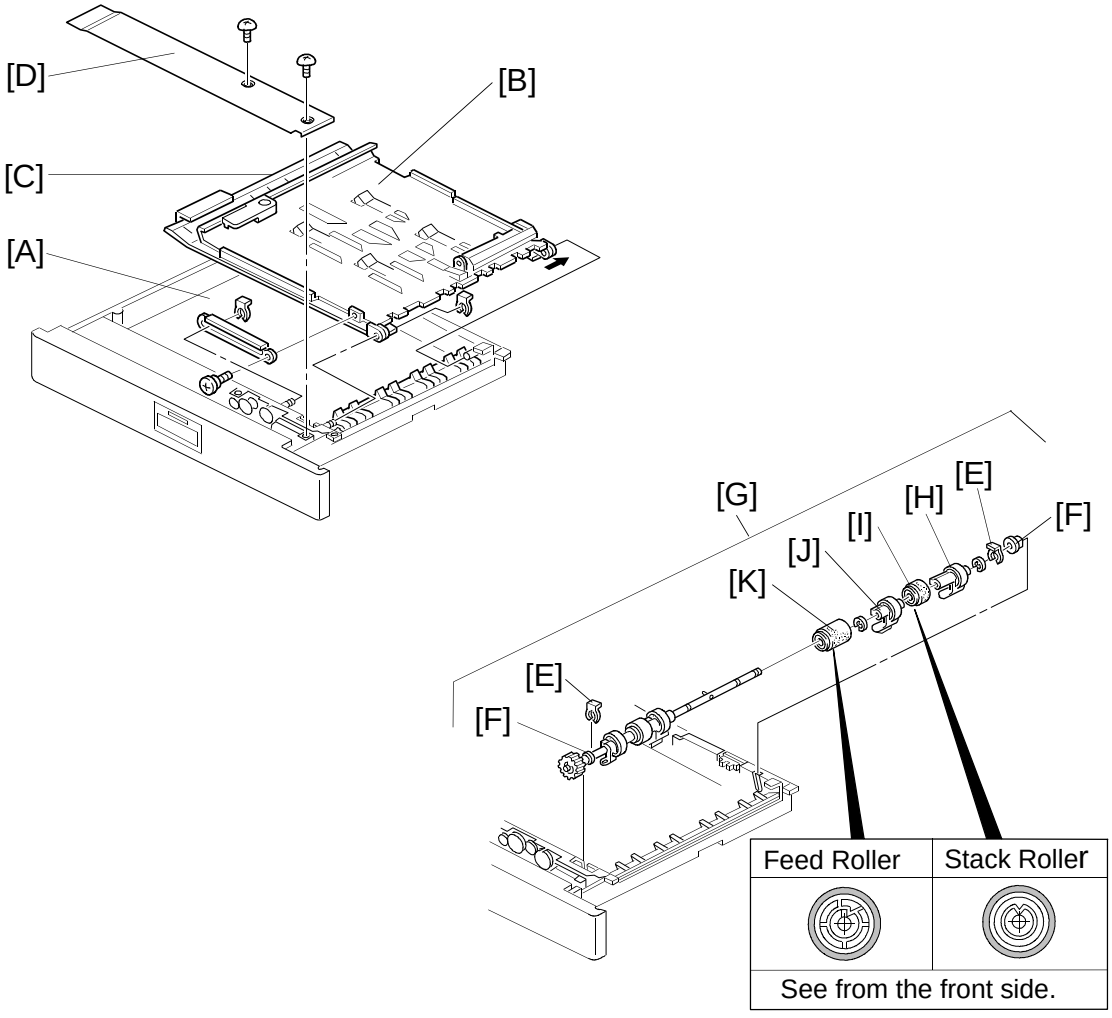

1. Pull out the duplex unit.
2. Remove the link bracket [A] (1 screw, 1 clip).
3. Remove the upper guide plate [B] and the lower guide plate [C] (1 clip).
4. Remove the inner cover [D] (2 screws).
5. Remove two clips [E].
6. Move the bushings [F] inward and remove the duplex feed roller assembly [G].
7. Remove the bushing [F], the paper flattener [H] (1 E-ring), the stack roller [I], the paper flattener [J], and the duplex feed roller [K].

NOTE: When installing the stack roller and the duplex feed roller, make sure that they are inserted in the correct orientation as shown.

9.3 DUPLEX FEED MOTOR REPLACEMENT

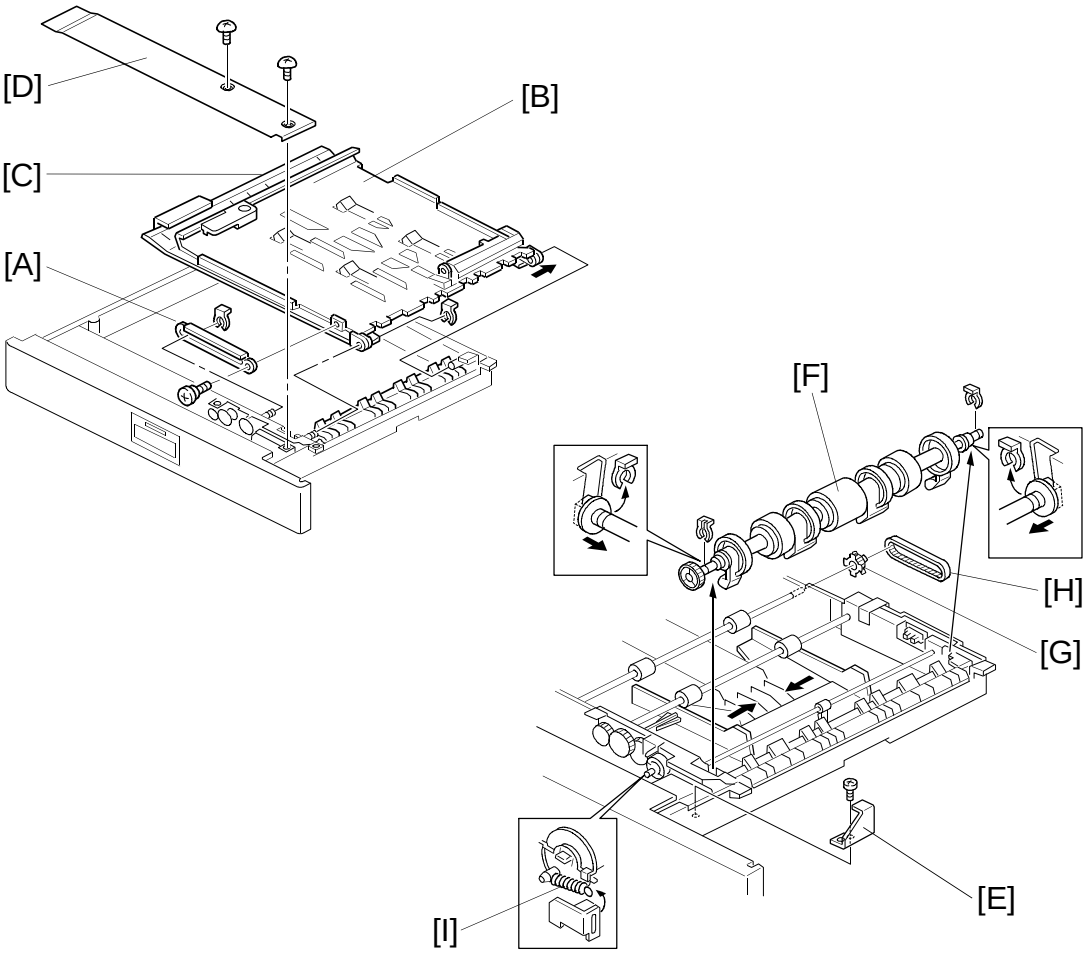

1. Remove the duplex unit (4 screws).
2. Remove the link bracket [A] (1 screw, 1 clip).
3. Remove the upper guide plate [B] and the lower guide plate [C] (1 clip).
4. Remove the inner cover [D] (1 screw).
5. Remove the inner cover bracket [E] (1 screw).
6. Remove the duplex feed roller assembly [F] (2 clips).
7. Remove the timing belt pulley [G] and remove the timing belt [H].
8. Remove the spring [I].

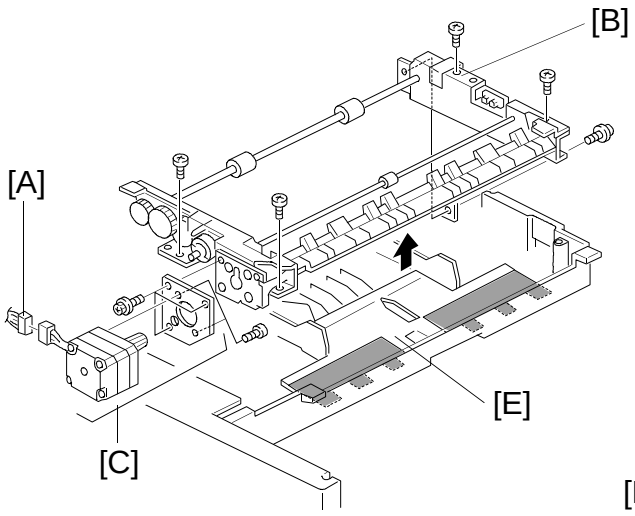

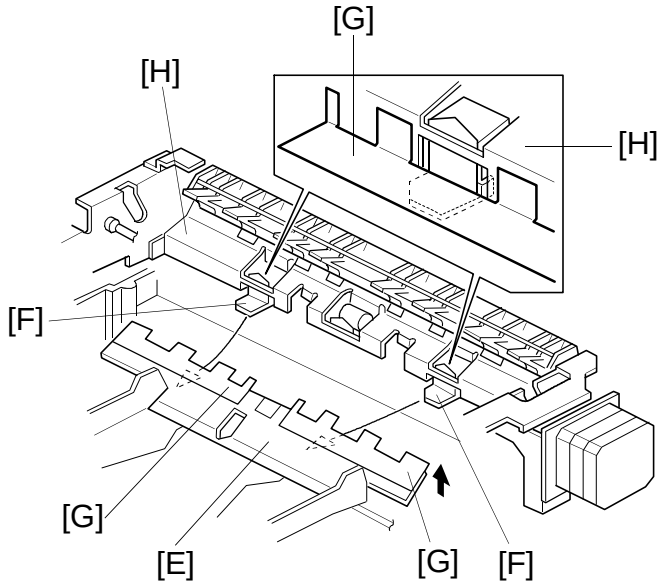

9. Disconnect the motor harness [A].
10. Move the jogger fence inward and remove the paper feed assembly [B] (5 screws).
11. Remove the duplex feed motor assembly [C] (3 screws).
12. Replace the duplex feed motor [D] (2 screws).

NOTE: 1) When installing the paper feed assembly, make sure that the bottom plate [E] is on top of the bracket [F] as shown.
2) When installing the paper feed assembly, make sure that the mylar [G] on the bottom plate is on top of the guide plate [H] as shown.

10. COPY QUALITY ADJUSTMENT

10.1 LIGHT INTENSITY ADJUSTMENT (SP4-001)

When: When replacing the drum - After performing SP3-123 (Drum initialization) and before exiting SP mode.

Purpose: To maintain the correct light intensity.

Adjustment standard: Level 2 of the gray scale on the OS-A3 test chart should be just visible on the copy when the 4th manual image density level is selected.

How: SP4-001 changes the exposure lamp voltage from the ac drive circuit on the dc power supply board.

NOTE: When replacing the drum, light intensity adjustment should be done only after performing SP3-123.

If the light intensity is adjusted, ADS gain data and V_L correction data are cleared. Therefore, after the light intensity adjustment, auto ADS gain adjustment (SP4-201) and forced V_L detection (SP3-105) must be performed.

See "Practical SP Mode Use Tables" in section 4 for the exact order in which SP modes must be done after changing major components.

1. Turn the main switch off.
2. Clean the following parts:

Item No.	Section	Method
(1)	Optics (mirrors, lens, reflectors, and exposure glass)	Damp cotton, and blower brush
(2)	Drum charge roller	Dry cloth or special cloth (P/N A1539004)
(3)	Toner shield glass and green filter, and erase lamp unit	Dry cloth and blower brush

3. Place an OS-A3 chart on the exposure glass.
4. Make a full size copy at manual image density level 4 (center) after the copier has warmed up.
5. Check that level 2 of the gray scale is just visible on the copy.

6. If the image density is not correct, go through the following steps.
   1) Enter SP4-001.
   2) Change the exposure lamp voltage setting displayed in the reduce/enlarge indicator. Use the number keys and follow these rules:
      If image density is too dark, increase the setting
      If image density is too light, decrease the setting

   NOTE: The voltage can be set between 50 and 75 V in 0.5 V steps. The default setting is on the "SP MODE FACTORY SETTING DATA" sheet located in the upper inner cover.

   3) Leave SP mode and make a copy at manual image density level 4.
   4) Check whether the image density is correct or not. If it is not, repeat the above steps from (1) to (3).

7. Perform ADS gain adjustment (SP4-201) and forced V_L detection (SP3-105).

NOTE: If the image density cannot be adjusted satisfactorily, adjust the development bias using SP2-201-001 (see section 10-3).

10.2 UNEVEN EXPOSURE ADJUSTMENT

When:	If the exposure is uneven.
Purpose:	To maintain even exposure.
Adjustment standard:	The side-to-side variation of the gray scales on the test chart should be less than one level.
How:	Change the position of the exposure adjusting plates to make the light intensity from the exposure lamp even across its length.

[A]

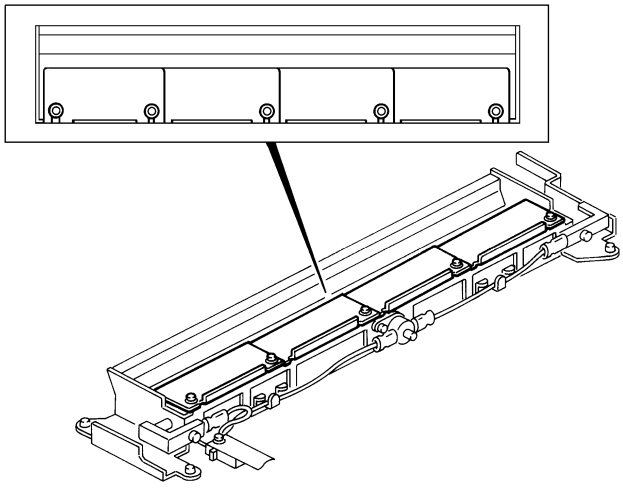

! CAUTION

Unplug the copier before starting the following procedure.

1. Clean the optics components.
2. Place a test chart on the exposure glass and make an A3/11" x 17" copy.
3. If the side-to-side variation of the gray scales is not within the adjustment standard, turn off the main switch and remove the exposure glass (see Exposure Glass Removal).
4. Position the adjusting plates [A] so that the copy quality meets the adjustment standard.

10.3 IMAGE AREA BIAS VOLTAGE ADJUSTMENT

10.3.1 Development Bias Adjustment (SP2-201-001)

When: If the image density at manual density level 4 cannot be adjusted to specification with the exposure lamp voltage (SP4-001) after performing SP3-123 (drum initialization) when the drum is replaced.

Purpose: To adjust the copy image density.

How: SP2-201-001 changes the development bias voltage used for copying.

NOTE: Normally the SP2-201-001 setting should be "5" (standard).

Development bias adjustment should be done only when adjusting light intensity (SP4-001) after performing the drum initialization (SP3-123), if necessary.

SP-2-201-001 Development Bias Adjustment

Setting	Density	Development Bias Correction Voltage
1	Dark ↑	+80V
2		+60V
3		+40V
4		+20V
5	Normal	± 0V
6	↓ Light	–20V
7		–40V
8		–60V
9		–80V

1. Enter SP2-201-001.
2. Change the setting displayed in the reduce/enlarge indicator with the numeric keys.
3. Leave this SP mode.

10.3.2 Highest ID Level Bias (Manual ID Level 7) Adjustment (SP2-201-002)

When: If a customer requests a lighter or darker copy image density at manual image density level 7.

Purpose: To meet any customer's requests about the image density at manual ID level 7.

How: SP2-201-002 changes the development bias voltage for images at manual ID level 7.

SP2-201-002: Highlight Bias

Setting	Density	Development Bias Correction Voltage
1	Normal	–40V
2	Dark	± 0V
3	Lighter	–80V
4	Lightest	–120V

1. Enter SP2-201-002.
2. Change the setting displayed in the reduce/enlarge indicator with the number keys. Determine the new setting from the above table.
3. Leave SP2-201-002.

10.4 TONER DENSITY ADJUSTMENT (SP2-203)

When: If a customer wants to change the overall image density.

Purpose: To change the proportion of toner by weight in the developer.

How: SP2-203 changes the development bias used for making the V_{SP} pattern.

SP2-203: V_{SP} Pattern Bias

Setting	Black Toner Density	Image Density	Development Bias Voltage for the ID Sensor Pattern
1	Low	Light	+100V
2	↑	↑	+80V
3	↑	↑	+60V
4	↑	↑	+40V
5	↑	↑	+20V
6	Normal	Normal	± 0
7	↓	↓	–20V
8	↓	↓	–40V
9	↓	↓	–60V
10	High	Dark	–80V

1. Enter SP2-203.
2. Change the setting displayed in the reduce/enlarge indicator with the numeric keys. Determine the new setting from the above table.
3. Leave this SP mode.

10.5 DETECT/FIXED/TD SENSOR TONER SUPPLY MODE SELECTION (SP2-208-001)

When: If the ID sensor or the TD sensor is in an abnormal condition.

Purpose: To leave the detect supply mode and to enter TD sensor supply mode or fixed supply mode.

How: SP2-208-001 changes the toner supply mode.

NOTE: If the ID sensor is in an abnormal condition, enter the TD sensor supply mode.
If the TD sensor is in an abnormal condition, enter the fixed supply mode.

SP2-208-001: Toner Supply Mode Selection

1: TD sensor supply mode
2: Fixed supply mode
3: Detect supply mode

10.6 AUTOMATIC ID SENSOR ADJUSTMENT (SP3-001)

When:
1. After cleaning, removing, or replacing the ID sensor board.
2. After replacing the OPC drum or RAM board on the main control board.
3. If a toner supply control problem occurs.
4. If memory all clear (SP5-801) has been performed.

Purpose: To make sure that the ID sensor functions correctly.

Adjustment standard: ID sensor: $V_{SG} = 4.0 \pm 0.2$ V

How: SP3-001 adjusts the value in memory for the ID sensor LED to get the correct sensor output.

NOTE: The adjusted value and sensor output can be monitored with SP3-002. Refer to the SP mode table for details.

10.7 TONER SUPPLY RATIO SELECTION

When: If the standard setting for the toner supply amount is not appropriate for the type of original in use.

Purpose: To adjust the toner supply amount. The value of the toner supply ratio should match the proportion of black on typical originals used by the customer.

How:

Detect supply mode:	SP2-222
TD sensor supply mode:	SP2-208-002
Fixed supply mode:	SP2-208-003

All three service programs change the toner supply clutch ON period.

SP2-222: Toner Supply Ratio (Detect Supply Mode)

Setting	1	2	3	4
Toner Supply Ratio	7%	15%	30%	60%

SP2-208-002: Toner Supply Ratio (TD Sensor Supply Mode)

Setting	1	2	3	4
Toner Supply Ratio	7%	15%	30%	60%

SP2-208-003: Toner Supply Ratio (Fixed Supply Mode)

Setting	1	2	3	4
Toner Supply Ratio	2%	4%	6%	11%

10.8 ADS SENSOR AUTOMATIC ADJUSTMENT (SP4-201)

When:
1. If the ADS sensor output voltage is not within the adjustment standard after cleaning the optics.
2. After replacing the following parts:
   ADS board, Exposure lamp, RAM board on the main control board.
3. If memory all clear (SP5-801) has been performed.

Purpose: To make sure that the ADS sensor functions correctly.

Adjustment standard: ADS Voltage = 2.7 ± 0.1V

How: SP4-201 adjusts the ADS gain value in memory to get the correct sensor output.

NOTE: Close the platen cover to prevent external light from reaching the ADS sensor when performing this adjustment.
The adjusted ADS gain value and the sensor output can be monitored with SP4-202. Refer to the SP mode table for details.

10.9 ADS DENSITY SELECTION (SP5-106)

When: If copies are too light or dirty background appears on copies in ADS mode.

Purpose: To maintain good copy quality in ADS mode.

How: Use SP5-106. For example, for lighter copies, select the "2: Light" setting (this increases the negative development bias voltage).

SP5-106: ADS Density
0: Dark
1: Normal
2: Light

10.10 VERTICAL MAGNIFICATION ADJUSTMENT (SP4-008)

When:	If vertical magnification is not within the adjustment standard.
Purpose:	To maintain proper vertical magnification.
Adjustment standard:	Less than ±1.0% difference between original and copy.
How:	SP4-008 changes the scanner speed compensation.

1. Place a 150 mm scale on the exposure glass perpendicular to the left scale.
2. Make a full size copy.
3. Check whether vertical magnification is within the adjustment standard.
4. If vertical magnification is not correct, go through the following steps.
   1) Enter SP4-008.
   2) Change the vertical magnification setting displayed in the reduce/enlarge indicator. Use the number keys and follow these rules:
      If the copy image is too short, increase the setting
      If the copy image is too long, decrease the setting

   NOTE: SP4-008 can be set between 0 and 32. Vertical magnification changes 0.1% per step.

   3) Leave the SP mode.
   4) Check whether vertical magnification is correct or not. If it is not, repeat the above steps from (1) to (3).

10.11 HORIZONTAL MAGNIFICATION ADJUSTMENT (SP4-101)

When:	If horizontal magnification is not within the adjustment standard.
Purpose:	To maintain proper horizontal magnification.
Adjustment standard:	Less than ±0.5% difference in full size mode between original and copy.
How:	SP4-101 changes the lens home position.

1. Place a 150 mm scale parallel to the left scale on the exposure glass.
2. Make a full size copy.
3. Check whether horizontal magnification is within the adjustment standard.
4. If horizontal magnification is not correct, go through the following steps:
   1) Enter SP4-101.
   2) Change the horizontal magnification setting displayed in the three-digit indicator. Use the number keys and follow these rules:
      If the copy image is too short, increase the setting
      If the copy image is too long, decrease the setting

   NOTE: SP4-101 can be set between 0 and 32. Horizontal magnification changes 0.1% per step.

   3) Leave SP mode.
   4) Check whether horizontal magnification is correct or not. If it is not, repeat the above steps from (1) to (3).

10.12 FOCUS ADJUSTMENT IN FULL SIZE MODE (SP4-103)

When: If the copy in full size mode is out of focus.

Purpose: To maintain correct focus in full size mode.

How: SP4-103 changes the 3rd scanner home position.

NOTE: Adjust the focus by checking the copies.
Check the horizontal magnification after doing SP4-103, and adjust it if necessary.

SP4-103: Focus Adjustment
0 - 150 (default = 75), 0.05 mm per step

10.13 FOCUS ADJUSTMENT IN ENLARGE/REDUCE MODE (SP4-102)

When: If the copy is out of focus in enlarge/reduce mode after adjusting SP4-008 (vertical magnification), SP4-101 (horizontal magnification), and SP4-103 (focus adjustment in full size).

Purpose: To maintain correct focus in enlarge/reduce mode.

How: SP4-102 changes the lens position 0.1% per step in enlarge/reduce mode.

NOTE: Normally, the factory-set value is best for this adjustment. Refer to "SP MODE FACTORY SETTING DATA" sheet located in the upper inner cover.

SP4-102: Lens Error Correction
0 - 16 (default = 8, – 0.8% to + 0.8%)

10.14 LEAD EDGE REGISTRATION ADJUSTMENT (SP1-001)

When: If lead edge registration is not within the adjustment standard.

Purpose: To maintain proper lead edge registration.

Adjustment standard: 0 ± 2 mm (0 ± 0.08")

How: SP1-101 changes the registration roller start timing.

SP1-101: Registration
0 - 32 (default = 16, – 8.0 mm to + 8.0 mm), 0.5 mm per step

10.15 LEAD EDGE ERASE MARGIN ADJUSTMENT (SP2-101-001)

When: If the lead edge erase margin is not within the adjustment standard.

Purpose: To maintain a proper lead edge erase margin.

Adjustment Standard: 2.5 ± 1.5 mm (0.1 ± 0.06")

How: SP2-101-001 changes the erase lamp off timing.

SP2-101-001: Lead Edge Erase
0 - 32 (default = 16, – 8.0 mm to + 8.0 mm), 0.5 mm per step

10.16 SIDE-TO-SIDE REGISTRATION ADJUSTMENT (SP4-011-001~009)

When: If side-to-side registration is not within the adjustment standard.

Purpose: To maintain proper side-to-side registration from all feed stations.

Adjustment standard: 0 ± 2 mm (0 ± 0.08")

How: SP4-011-001~009 changes the lens horizontal home position.
SP4-011-001~007 and 009 change the lens horizontal home position used for certain units (see step 3 below). If registration is not within the standard when using a certain unit, use one of these SP modes.
SP4-011-008 is the base adjustment made in the factory. If this setting is changed by a small amount, all other SP4-011 settings change automatically by the same amount. Use this if the image shift direction (to the front or to the rear) is the same from all paper feed stations.

1. Make a full size copy from each paper feed station.
2. Check whether side-to-side registration is within the adjustment standard.

3. If side-to side registration is not correct, go through the following steps:
   1) Enter SP4-011.
   2) Select the required 3rd level program number from the table below with the + and – keys.

3rd Level Program Number	Non-duplex Machines	Duplex Machines
–001	1st Tray	Duplex
–002	2nd Tray	1st Tray
–003	3rd Tray	2nd Tray
–004	4th Tray	3rd Tray
–005	5th Tray	4th Tray
–006	By-pass	By-pass
–007	LCT	LCT
–008	Base setting made in the factory	
–009	ADF	ADF

   3) Change the side-to-side registration setting displayed in the reduce/enlarge indicator. Use the number keys and follow these rules:
      If the copy image is shifted to front, increase the setting
      If the copy image is shifted to rear, decrease the setting
   4) Leave SP mode.
   5) Check whether side-to-side registration is correct or not. If it is not, repeat the above steps from (1) to (4).

10.17 4TH/5TH MIRROR HEIGHT ADJUSTMENT

When: If skewed images appear.

Purpose: To maintain proper copy quality.

How: Turn the 4th/5th mirror height adjustment screw. This changes the 4th/5th mirror height.

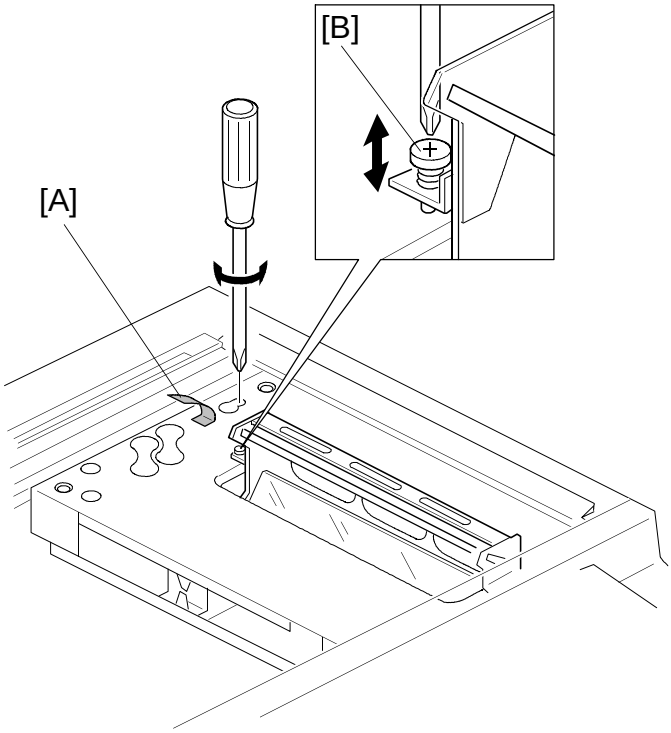

! CAUTION

Never perform this adjustment unless you have positively verified that the source of the image skewing is optical and not in the paper path.

1. Turn off the main switch and remove the exposure glass.
2. Peel off the shielding mylar [A] halfway.
3. Adjust the 4th/5th mirror height by turning the adjusting screw [B].

NOTE: After the adjustment, stick the mylar [A] again in its former position.

11. OTHERS

11.1 MAIN CONTROL BOARD REPLACEMENT

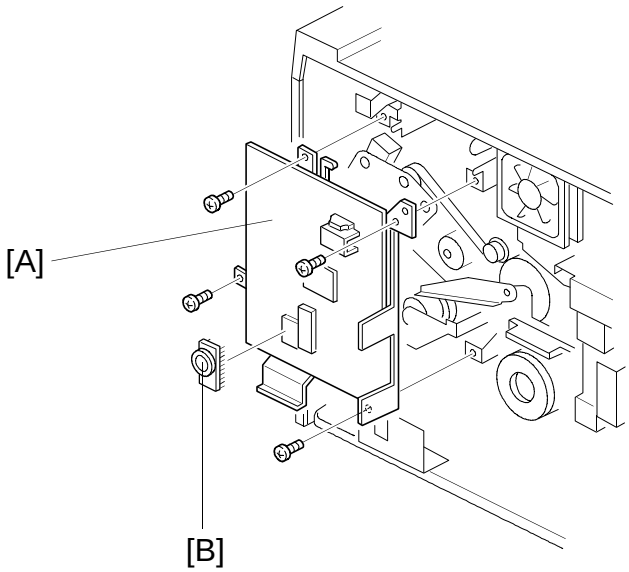

NOTE: Never touch the surface of the RAM back up battery on the main board with a screwdriver or other metallic object. If the battery is short-circuited, RAM data will be destroyed in the worst case.

1. Turn off the main switch and unplug the power cord.
2. Remove the rear cover.
3. Remove the main control board [A] (4 screws and all connectors).
4. Remove the RAM board [B] from the old main control board and install it on the new board.

11.2 AC POWER SUPPLY BOARD REPLACEMENT

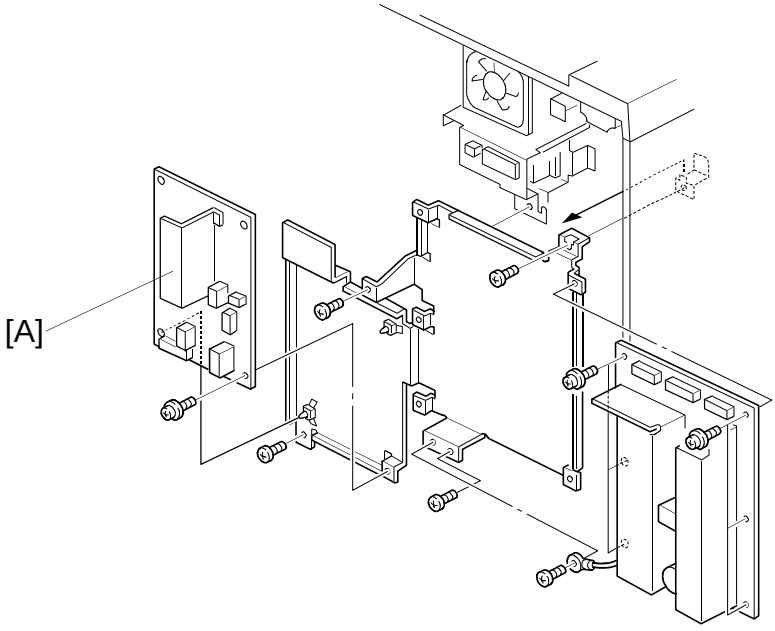

NOTE: 1. For 115V machines, check the fuse on the board before determining that the ac drive board is defective.
2. Do not adjust VR371 on the ac drive board. Copy quality will be seriously affected if it is turned.

1. Turn off the main switch and unplug the machine.
2. Remove the rear cover.
3. Replace the ac drive board [A] (1 screw, 3 locking supports, and all connectors).

11.3 DC POWER SUPPLY BOARD REPLACEMENT

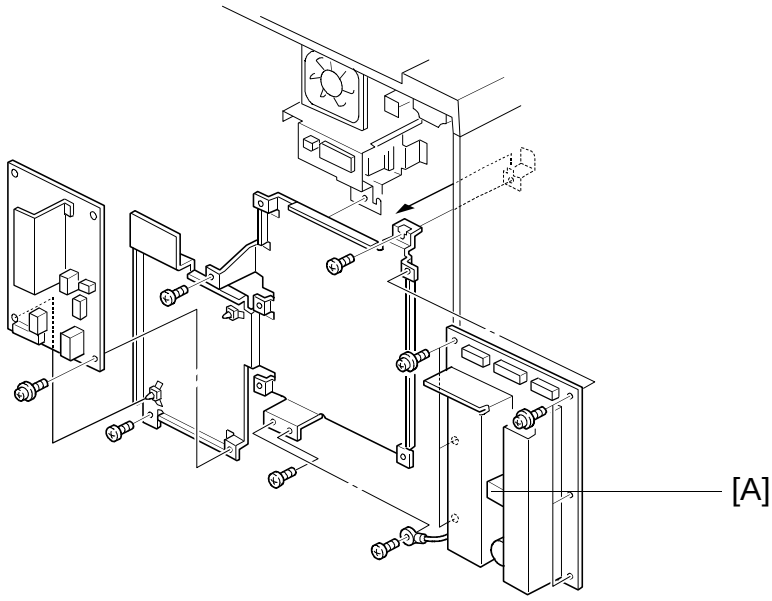

NOTE: Check the fuses (FU301, FU302, FU303, and FU304) on the board before determining that the dc power supply board is defective.

1. Turn off the main switch and unplug the machine.
2. Remove the rear cover.
3. Replace the dc power supply board [A] (7 screws and all connectors).

   NOTE: 6 screws for 115V machines.

11.4 CB HIGH VOLTAGE SUPPLY BOARD REPLACEMENT

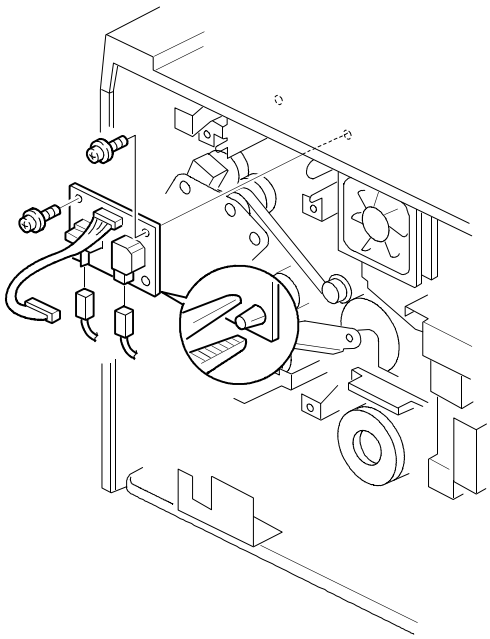

1. Turn off the main switch and unplug the machine.
2. Remove the rear cover.
3. Remove the main control board.
4. Replace the CB high voltage supply board [A] (2 screws and 1 locking support).

11.5 T HIGH VOLTAGE SUPPLY BOARD REPLACEMENT

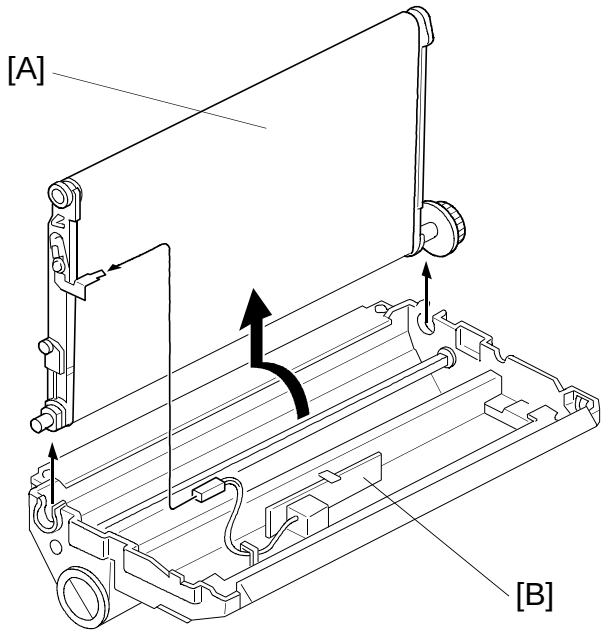

1. Turn off the main switch and unplug the machine.
2. Remove the transfer belt unit [A]. (See "Transfer Belt Unit Removal".)
3. Replace the T high voltage supply board [B] (1 screw, 1 clamp, and 2 metal spring plates).

SECTION 6

TROUBLESHOOTING

1. COPY QUALITY

1.1 INTRODUCTION

This troubleshooting guide is compiled to help field engineers solve some of the more common field problems. However, it does not cover all the potential problems. We request your help in improving our troubleshooting documentation. Whenever you encounter new field problems, please submit detailed reports to the nearest service support office. We will then issue additional troubleshooting information based on reports from you and other field service engineers around the world.

1. The following is a comparison table showing the area you should check first if you have image problems at periodic intervals.

Interval of Periodic Image Problem	Possible Cause
188.4 mm/7.42"	Drum
43.9 mm/1.73"	Drum Charge Roller
334 mm/13.15" (A153, A155, and A156 copiers) 244.5 mm/9.63" (A157, A159, and A160 copiers)	Transfer Belt
125.6 mm/4.94"	Hot Roller or Pressure Roller

2. If the problem is related to electrical circuit boards, first disconnect, then reconnect the connectors before replacing the PCBs.

1.2 BLANK COPY (WHITE COPY)

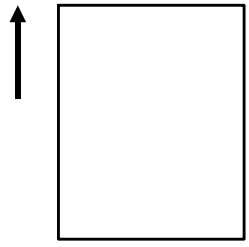

- Problem -

White or almost white copy.

- Possible Causes -

1. Charge is not applied.
   - CB high voltage supply board failure
   - Poor high voltage terminal contact
   - Broken drum charge roller
   - Broken transfer belt contact clutch

2. The copy image is not transferred to the paper.
   - T high voltage supply board failure
   - Poor high voltage lead wire contact
   - Damaged transfer belt

3. The development roller does not rotate.
   - Broken drive gears
   - Defective development unit drive clutch
   - Broken transfer belt contact clutch.

4. Poor drum sensitivity.
   - The drum was exposed to fluorescent light or direct sunlight for long period of time
   - The drum was exposed to ammonia gas or corrosive fumes for a long period of time

5. The drum does not rotate.

- Action -

Is the drum charge roller correctly installed?

Yes

No

Install the drum charge roller correctly.

Does the charge roller terminal properly contact the end of the drum charge roller?

Yes

No

Replace the charge roller terminal.

Is the drum charge roller broken?

No

Yes

Replace the drum charge roller.

Are the development drive gears worn or broken?

No

Yes

Replace the drive gears.

Does the development unit drive clutch turn on properly?

Yes

No

Does the voltage at CN117-4 stay at 24 volts on the main board after the Start key is pressed?

24 volts

0 volts

Replace the development unit drive clutch.

Replace the main control board.

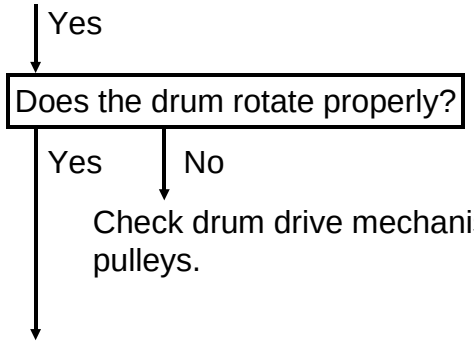

Check the following points:

- CN115-3 (Charge PWM)
  (1) If the signal stays LOW after the Start key is pressed, replace the main control board.

  (2) If no drum charge voltage is applied to the drum charge roller even if the signal changes to a 5V pulse signal, replace the CB high voltage supply board.

- CN105-2 (Transfer PWM)
  (1) If the signal stays LOW after the Start key is pressed, replace the main control board.

  (2) If no transfer voltage is applied to the transfer belt unit even if the signal changes to a 5V pulse signal, replace the T high voltage supply board.

If there is no problem with the signal lines, replace the drum if the sensitivity does not recover even when the drum is not exposed to light.

1.3 DIRTY BACKGROUND

- Problem -

1. Dirty background at image density level 4 (manual setting).

2. Copies made in ADS mode have a dirty background.

- Possible Causes -

1. V_L correction failure
   - Very dirty optics (V_L correction cannot compensate)
   - Deteriorated exposure lamp (maximum output cannot give sufficient light intensity)
   - Failure of the dc power supply board
   - Dirty erase lamp unit

2. V_R correction failure
   - CB (development bias) high voltage supply board failure
   - Poor development bias terminal contact
   - The development bias is grounded

3. The OPC drum is not grounded properly

4. ADS mode
   - Improper ADS Density setting (SP5-106)
   - ADS Sensor board failure
   - CB high voltage supply board failure
   - Incorrect adjustment of the ADS sensor (SP4-201)
   - Sensitivity of the ADS sensor is not correct for the original

5. High toner density
   - Improper setting of the drum charge voltage adjustment (SP2-001)
   - Improper V_{SP} pattern bias (SP2-203)
   - Dirty erase lamp unit

6. Drum charge roller thermister error
   - Connector of the drum charge roller thermistor id not connected properly.
   - Broken drum charge roller thermistor

- Action -

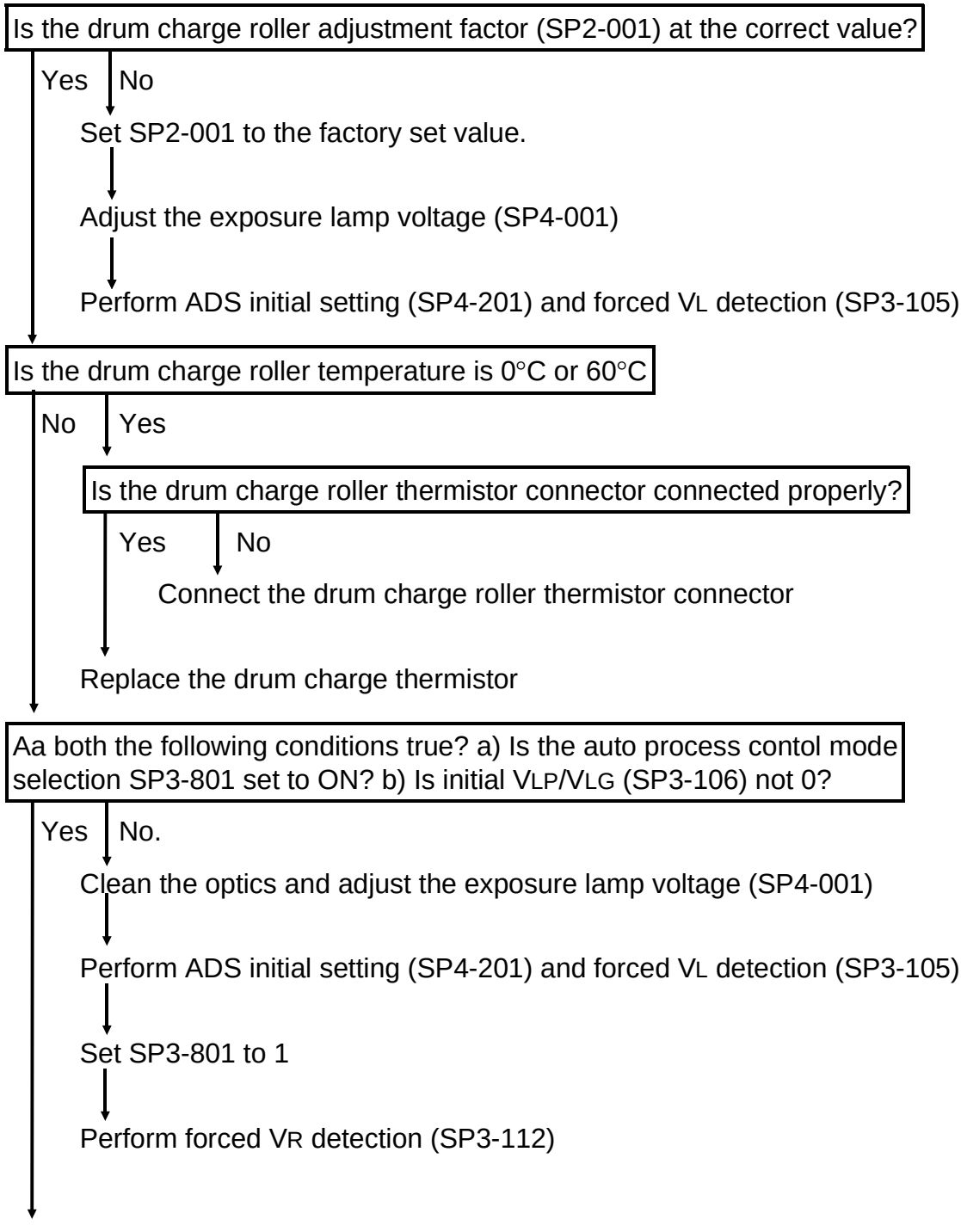
Is the drum charge roller adjustment factor (SP2-001) at the correct value?
Yes
No
Set SP2-001 to the factory set value.
Adjust the exposure lamp voltage (SP4-001)
Perform ADS initial setting (SP4-201) and forced VL detection (SP3-105)
Is the drum charge roller temperature is 0°C or 60°C
No
Yes
Is the drum charge roller thermistor connector connected properly?
Yes
No
Connect the drum charge roller thermistor connector
Replace the drum charge thermistor
Aa both the following conditions true? a) Is the auto process contol mode selection SP3-801 set to ON? b) Is initial VLP/VLG (SP3-106) not 0?
Yes
No.
Clean the optics and adjust the exposure lamp voltage (SP4-001)
Perform ADS initial setting (SP4-201) and forced VL detection (SP3-105)
Set SP3-801 to 1
Perform forced VR detection (SP3-112)

Is exposure lamp voltage (SP4-002) > Set exposure lamp voltage (SP4-001) +10?

No / Yes

Yes:
- Clean the optics and adjust the exposure lamp votage (SP4-001)
- Perform ADS initial setting (SP4-201) and forced V_L detection (SP3-105)
- Perform forced V_R detection

Perform forced process control (SP3-902) until the target exposure lamp voltage (SP4-002) does not charge

Is the background of the copy image still dirty?

No / Yes

Yes:

If dirty background still appears, is the development bias applied to the development roller shaft?

No / Yes

Yes:
- Check that the drum is properly grounded.

Check the continuity between the development roller shaft and the development bias terminal

Good / No good

No good:
- Repair the harness or terminals.

Good:

Is the signal at CN115-1 a 5V pulse signal after the Start key is pressed?

Yes / No

No:
- Replace the main control board.

Yes:
- Replace the CB high voltage supply board.

Trouble-shooting

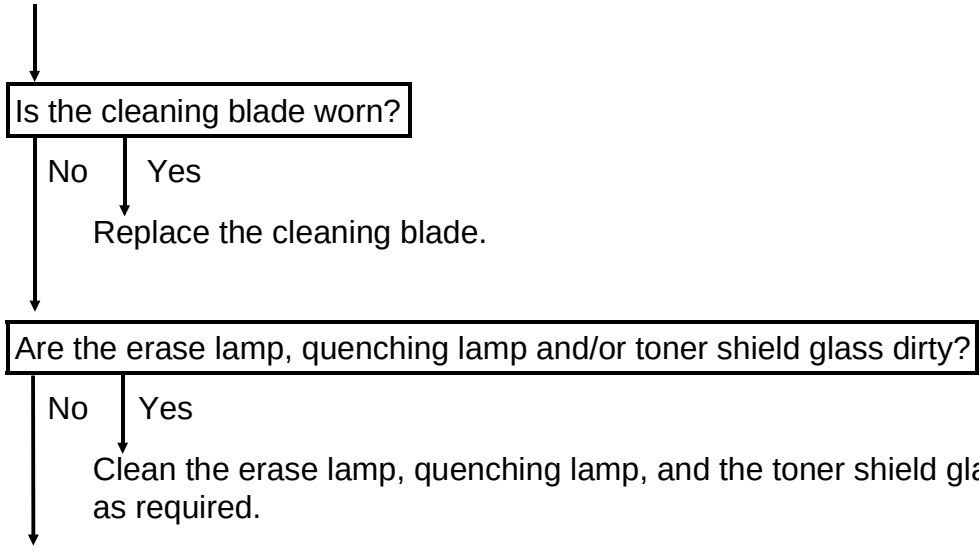

If toner scattering occurs, see "1.13 Toner Scattering" later in this section.

If dirty background occurs only in ADS mode, do the following:

- If the ADS voltage (SP4-202) is not within 2.7 ± 0.1 volts (this is the standard voltage), readjust the ADS voltage (SP4-201).
- Change the ADS density setting (SP5-106) from 1 (Normal) to 2 (Light).

If dirty background occurs only for some types of red paper originals in ADS mode, do the following:

- Change the ADS sensor to the optional ADS sensor which has different sensitivity for red paper originals. See "ADS SENSOR (OPTION)" in Section 3.

1.4 UNEVEN IMAGE DENSITY

- Problem -

Uneven image density appears on copies.

- Possible Cause -

1. Dirty optics
2. The exposure adjustment plates are out of positon
3. Dirty drum charge roller
4. Improper function of cross mixing in the development unit

- Action -

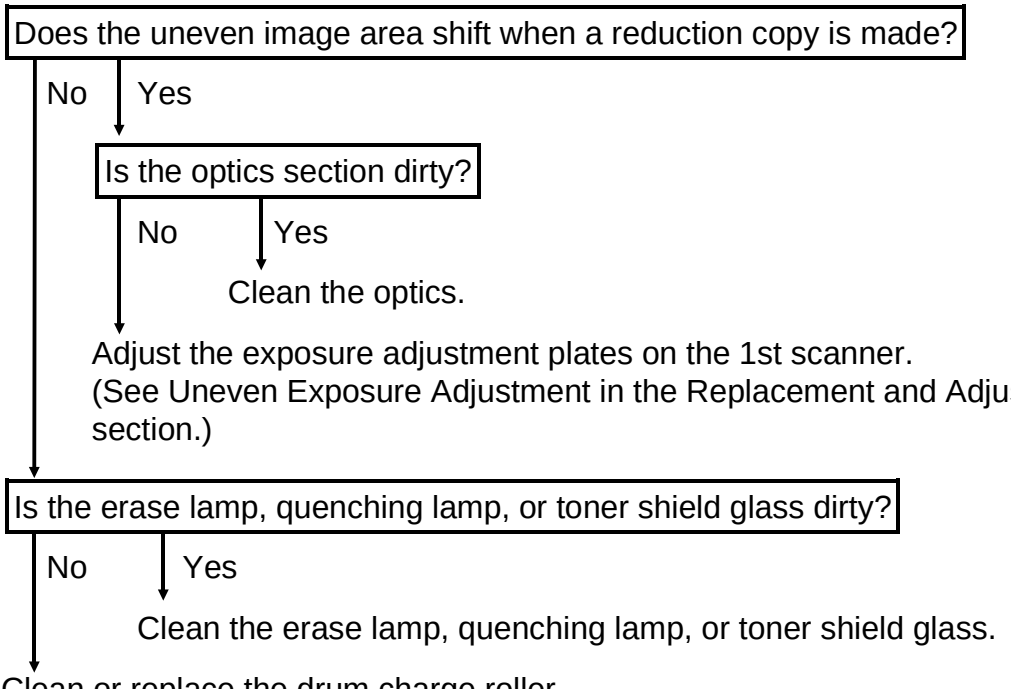

1.5 VERTICAL BLACK BANDS

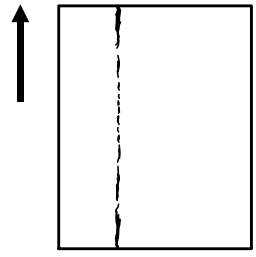

- Problem -

Vertical black bands appear on the copy.

- Possible Causes -

1. Dirty optics
2. Dust between the cleaning blade and the drum
3. The edge of the cleaning blade is deformed
4. Dirty drum charge roller.
5. Deformed inlet seal on the development unit

- Action -

Do the black bands shift when a reduction copy is made?

No

Yes

Check and clean the optics section (including the toner shield glass).

Press the blade release lever several times to clean the edge of the cleaning blade. If black bands still appear, go to the next step.

Is the edge of the cleaning blade deformed?

No

Yes

Replace the cleaning blade.

Is the drum charge roller dirty ?

No

Yes

Clean or replace the drum charge roller.

If the inlet seal on the development unit is deformed, replace the inlet seal plate and the seal as a set.

1.6 VERTICAL BLACK LINES

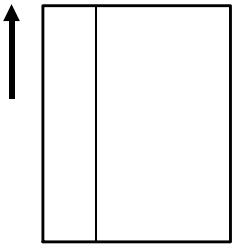

- Problem -

Thin black lines appear on the copy.

- Possible Causes -

1. Scratched cleaning blade
2. Dirty or scratched mirrors
3. Scratched or dirty drum
4. Scratched hot roller

- Action -

Do the black lines shift when a reduction copy is made?

No

Yes → Clean or replace the exposure glass or mirrors.

Is the toner shield glass or green filter scratched?

No

Yes → Replace the toner shield glass or green filter.

Is the edge of the cleaning blade scratched?

No

Yes → Replace the cleaning blade.

Is the hot roller scratched?

No

Yes → Check whether black lines appear on the copy by stopping the copy paper in the transport section. If no black lines appear, replace the hot roller.

Check whether the drum is scratched or there is built-up toner on the drum.

- If toner is built up on the drum, clean the drum as follows;

  Wipe with a dry cloth → Wipe with a cloth wet with water → Wipe again with a dry cloth (until no water remains)

  NOTE: Never use alcohol to clean the drum, alcohol dissolves the drum surface.

- If the drum is scratched, replace the drum.

1.7 VERTICAL WHITE LINES OR BANDS—1 (DULL OR BLURRED)

- Problem -

Dull or blurred white lines appear on the copy.

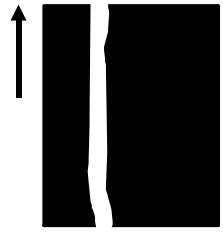

- Possible Causes -

1. Dirty or deteriorated drum charge roller
2. Damp or deformed inlet seal on the development unit

- Action -

Is the drum charge roller dirty?

No

Yes

Clean the drum charge roller with a dry cloth.

Is the inlet seal damp or deformed.

No

Yes

Clean the inlet seal with a dry cloth. If the problem is not corrected, replace the inlet seal plate and the seal as a set.

Replace the drum charge roller.

1.8 VERTICAL WHITE LINES OR BANDS—2 (THIN, DISTINCT)

- Problem -

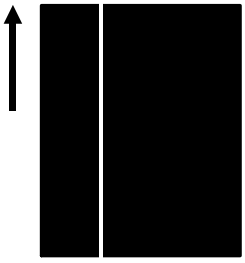

Vertical white lines appear on the copy.

- Possible Causes -

1. Dirty or deteriorated drum charge roller
2. Paper dust on the edge of the cleaning blade
3. Scratched drum
4. Scratched hot roller

- Action -

Is the drum charge roller dirty?

No / Yes

Yes: Clean the drum charge roller with a dry cloth.

Press the cleaning blade release lever several times. Make a copy and if white lines still appear, go to the next step.

Make a copy and stop the machine when the paper reaches the transport section. Do white lines appear on the copy?

No / Yes

Yes: Replace the drum if it is scratched.

Replace the hot roller if it is scratched.

NOTE: If the drum is scratched, find out what caused the scratches on the drum and correct the problem. It could be any of the following.

- Paper misfeed
- Incorrect positioning of the pick-off pawls
- Foreign substances on the cleaning blade
- Carrier leakage

1.9 HORIZONTAL BLACK/WHITE LINES

- Problem -

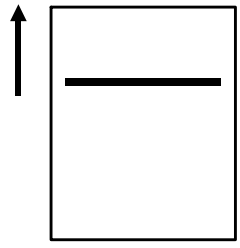

Black or white lines perpendicular to the paper feed direction appear on the copy image.

- Possible Causes -

1. The drum is scratched.
   If black/white lines appear at 188.4 mm (7.42") intervals, the cause is a scratched drum or toner build-up.
2. The drum charge roller is scratched.
   If black/white lines appear at 43.9 mm (1.73") intervals, the cause is a scratched drum charge roller.
3. The hot roller is scratched.
   If black lines appear at 125.6 mm (4.94") intervals, the cause is a scratched hot roller.
4. Toner adheres to the drum surface.
   Due to insufficient cleaning, foreign matter may accumulate on the blade, causing toner to stick to the drum surface when the drum stops.

- Action -

Is the drum scratched?
- No
- Yes → Replace the drum.

Is the drum charge roller scratched ?
- No
- Yes → Replace the drum charge roller.

Is the hot roller scratched?
- No
- Yes → Replace the hot roller.

If toner adheres to the drum surface, clean the drum with wet cotton. Also clean or replace the cleaning blade.

1.10 SKEWED (OPTICAL) COPY IMAGE

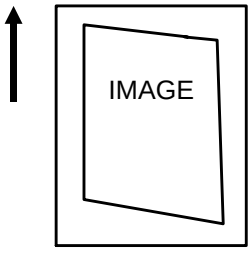

- Problem -

The copy image is skewed (into a parallelogram shape).

The sides of the copy image are straight, but the leading and trailing edges are skewed.
(This differs from skewing originating in the paper path.)

- Possible Causes -

1. The 1st and 2nd scanners are positioned incorrectly.
2. The 3rd scanner is not parallel with the 1st and 2nd scanners.
3. The mirrors are in the wrong position.
4. The stubs of the 3rd scanner are off the rails.

- Action -

Are the 1st and 2nd scanners properly positioned ?

Yes

No → Reposition the scanners correctly.

Is each mirror positioned correctly on its scanner?

Yes

No → Reposition the mirror correctly. If the spring plates are defective, replace them.

Are the stubs of the 3rd scanner assembly off the rails?

No

Yes → Put the scanner assembly stubs back on the rails.

Readjust the height of the 3rd scanner by turning the adjusting screw.

Trouble-shooting

1.11 TONER DENSITY TOO HIGH

- Problem -

1. Dirty background appears on the copy.
2. The image density of black solid areas is too high.

- Possible Causes -

1. The toner supply clutch keeps turning continuously.
2. The copier entered fixed toner supply mode due to an abnormal sensor condition.
3. The main control board is defective.
4. The V_{SP} pattern development bias is too high.
5. The drum charge voltage for making V_{SP} patterns is too low.

- Action -

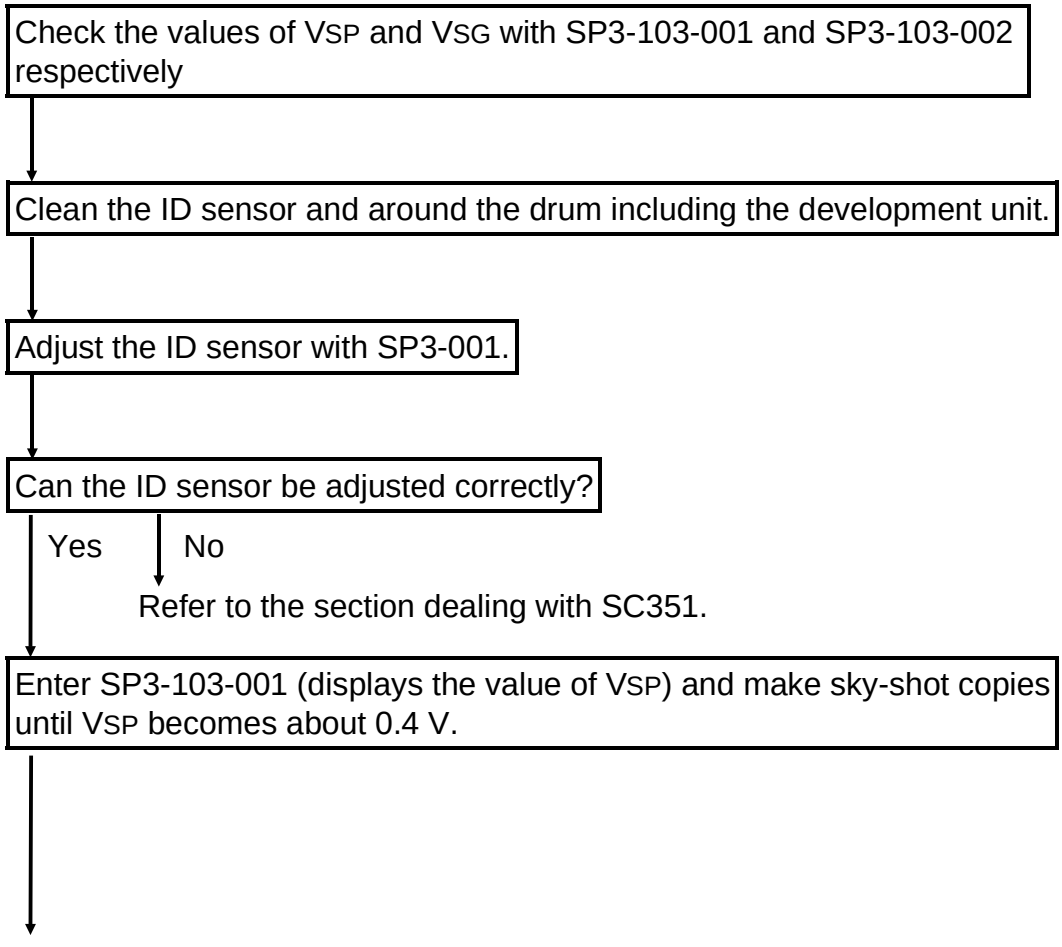

Make copies with a test chart and monitor the V_{SP} value and the toner supply clutch function.

Is the toner supply clutch controlled properly? (See the note at the bottom of the page.)

Yes

No

Is the voltage at CN117-2 always 24V ?

Yes

No

Replace the toner supply clutch.

Replace the main control board.

Is the drum charge voltage correction value for the V_{SP} pattern SP2-003 set to the factory setting on the data sheet inside the front cover?

Yes

No

If the CB high voltage supply board is the original one, store the factory setting in SP2-003. If it is not, then store 16 in SP2-003.

Is the copier in fixed supply mode?

No

Yes

Change the setting of SP2-208-001 to "3".

Reduce the value of the development bias correction for making V_{SP} patterns (SP2-203) to make the V_{SP} pattern darker.

Note: The toner supply clutch should turn on for about a second or a second and a half at intervals that depend on the condition of the developer. The toner supply clutch should not remain on for long periods, switch on/off erratically, or stay on permanently.

1.12 TONER DENSITY TOO LOW

- Problem -

1. Light copies
2. Carrier on the copies.
3. Light spots appear in solid black areas.

- Possible Causes -

1. The toner supply clutch does not rotate.
2. The copier entered fixed toner supply mode due to an abnormal sensor condition.
3. The main control board is defective.
4. The V_{SP} pattern bias is too low.
5. The drum charge voltage for making V_{SP} patterns is too high.

- Action -

Check the values of V_{SP} and V_{SG} with SP3-103-001 and SP3-103-002 respectively.

↓

Clean the ID sensor and around the drum.

↓

Adjust the ID sensor with SP3-001.

↓

Can the ID sensor be adjusted correctly?

Yes ↓

No → Refer to the section that deals with SC351.

Perform forced toner supply (SP2-207) until V_{SP} is at about the threshold level (around 0.4 V). Check V_{SP} with SP3-103-001 as necessary.

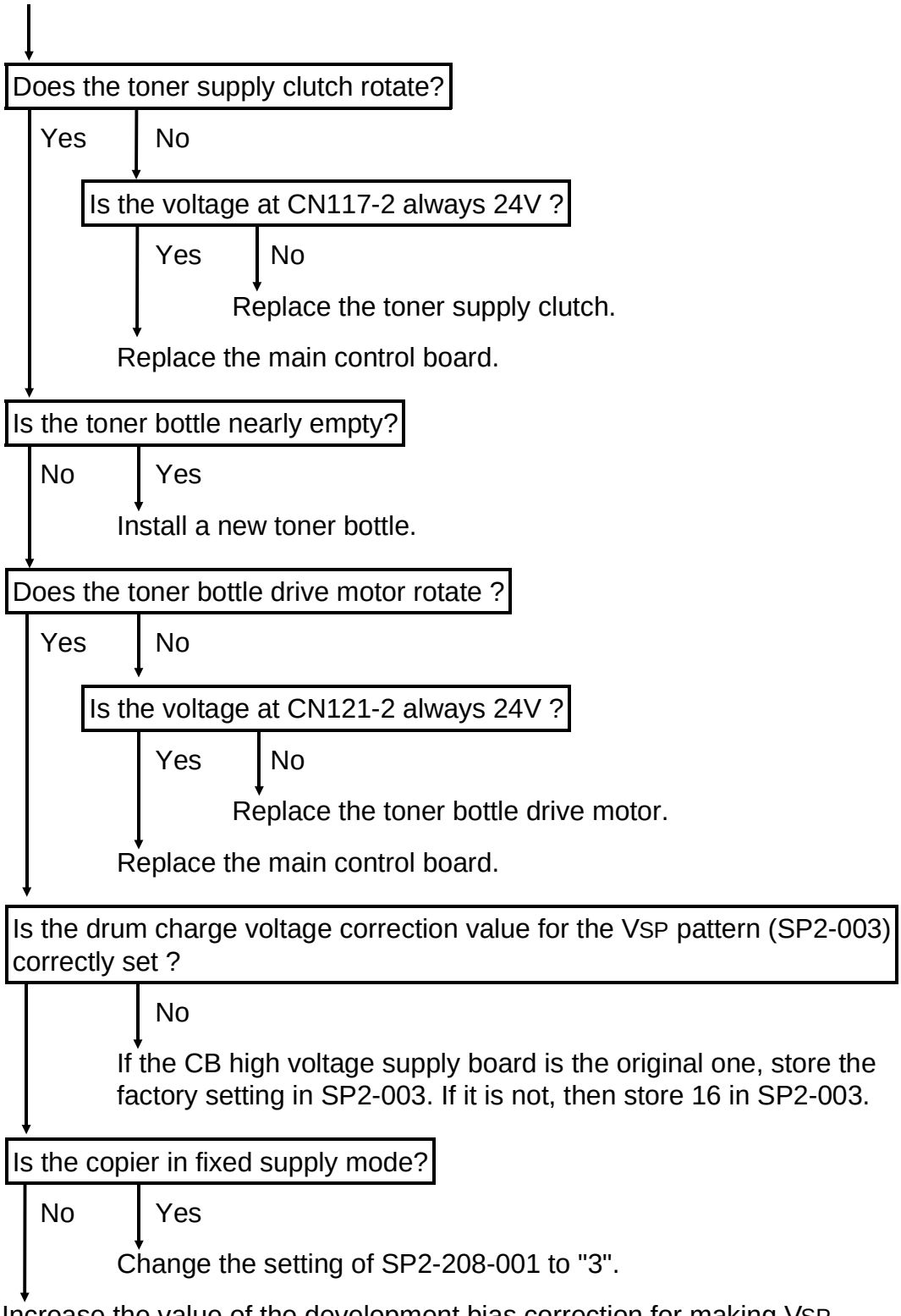

Increase the value of the development bias correction for making VSP patterns (SP2-203) to make the VSP pattern lighter.

1.13 TONER SCATTERING

- Problem -

Toner scatters from the development unit.

- Possible Causes -

1. The toner density is too high.
2. The inlet seal on the development unit is out of position.
3. The developer has deteriorated.

- Action -

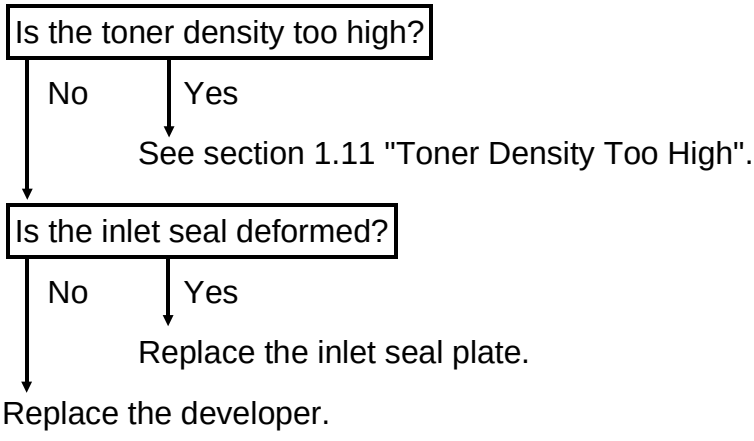

1.14 UNFUSED COPY

- Problem -

Solid black areas of the copy rub off easily.

- Possible Causes -

1. The fusing pressure is too low.
2. The fusing temperature is too low.
3. The thermistor is malfunctioning.

- Action -

Adjust the position of the pressure springs to increase the fusing pressure.

↓ No good

Increase the fusing temperature using SP1-105-001 (main fusing lamp) and SP-105-003 (secondary fusing lamp).

↓ No good

Check the thermistor. If the thermistor is malfunctioning, replace it.

1.15 A HORIZONTAL THIN LINE APPEARING CLOSE TO THE LEADING EDGE

- Problem -

When an original has solid black areas at the trailing edge, toner transferred from the trailing edge onto the hot roller will appear on the next sheet of copy paper.

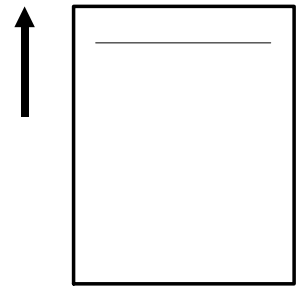

- Action -

Adjust SP2-101-002 (trailing edge erase margin) to leave a blank margin at the trailing edge of copies.
(The blank margin can be adjusted from 0 to 16 mm in 0.5 mm steps when the leading edge registration is adjusted to 0 mm.)

1.16 CREASING AFTER FUSING

- Problem -

Under high humidity conditions, humidified copy paper creases as it comes out of the fusing unit.

- Action -

Install an optional tray heater in each paper feeding station. Refer to "Tray Heater Installation" in section 3.
(The tray heater is available as a service part.)

1.17 Z-FOLDED COPY OR LEADING EDGE REGISTRATION VARIES

- Problem -

Copies are folded into a "Z" shape at the leading edge. The variation in leading edge registration is too big.

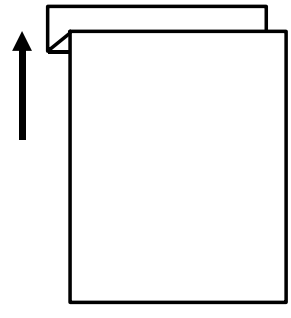

- Action -

Adjust the amount of paper buckle between the registration rollers and the feed & separation rollers with SP1-003 for each paper feeding station.
See the SP mode table for details.

2. TONER SUPPLY CONTROL

- Problem -

The manual ID level or ADS indicator blinks.

- Possible Causes -

1. Bad ID sensor board terminal contact
2. ID sensor adjustment error
3. Defective ID sensor
4. Dirty ID sensor
5. Bad TD sensor connector contact
6. TD sensor adjustment error
7. Defective TD sensor

- Action -

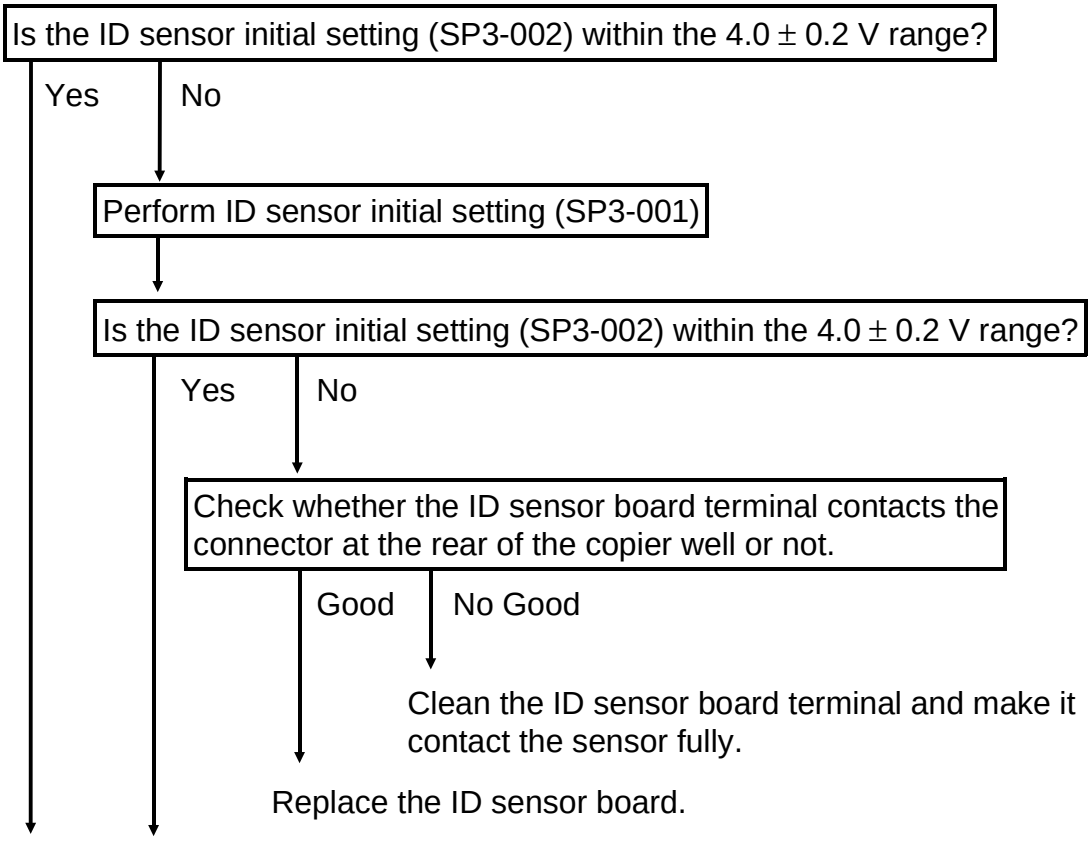

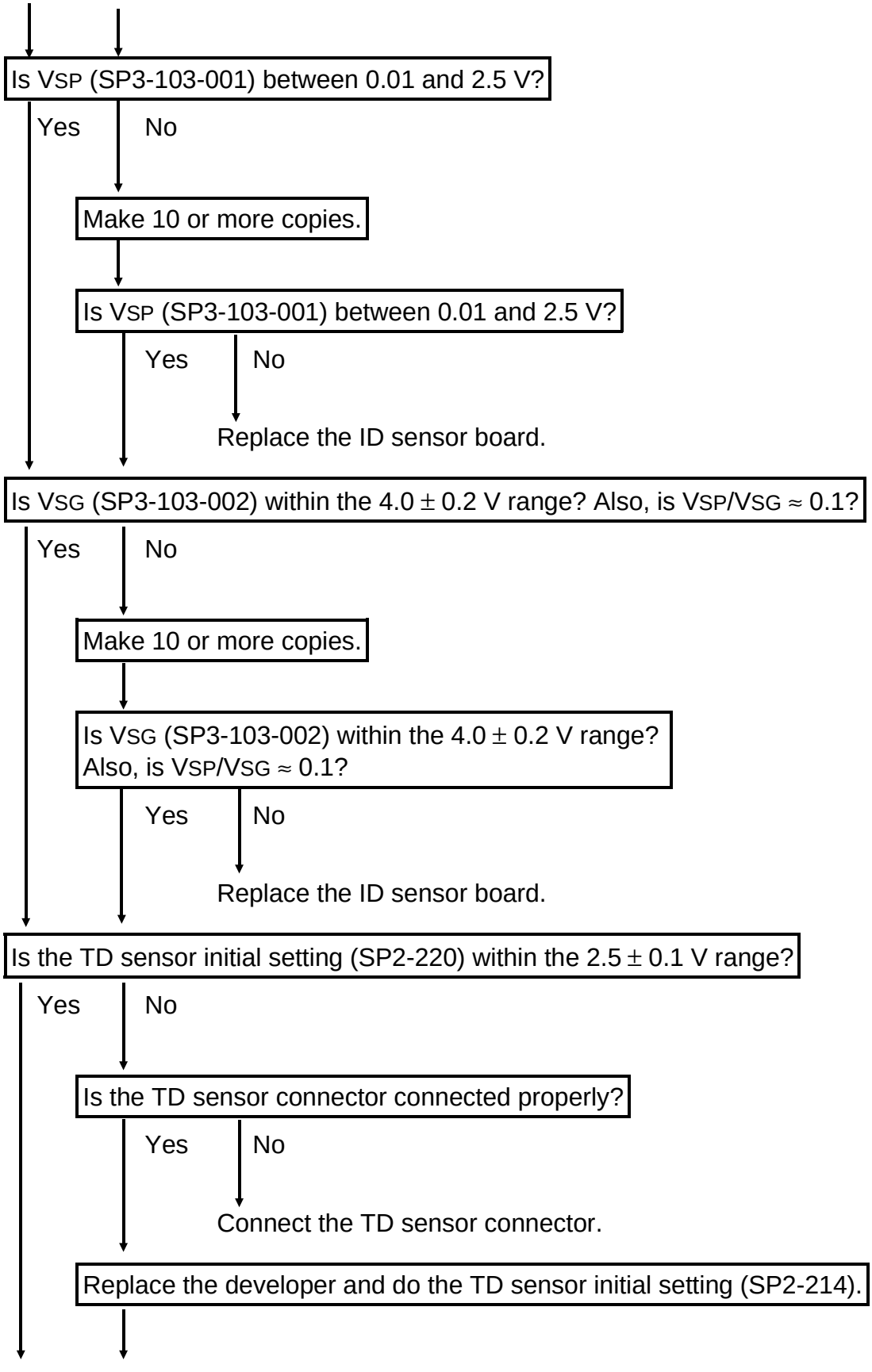
Is VSP (SP3-103-001) between 0.01 and 2.5 V?
Yes
No
Make 10 or more copies.
Is VSP (SP3-103-001) between 0.01 and 2.5 V?
Yes
No
Replace the ID sensor board.
Is VSG (SP3-103-002) within the 4.0 ± 0.2 V range? Also, is VSP/VSG ≈ 0.1?
Yes
No
Make 10 or more copies.
Is VSG (SP3-103-002) within the 4.0 ± 0.2 V range?
Also, is VSP/VSG ≈ 0.1?
Yes
No
Replace the ID sensor board.
Is the TD sensor initial setting (SP2-220) within the 2.5 ± 0.1 V range?
Yes
No
Is the TD sensor connector connected properly?
Yes
No
Connect the TD sensor connector.
Replace the developer and do the TD sensor initial setting (SP2-214).

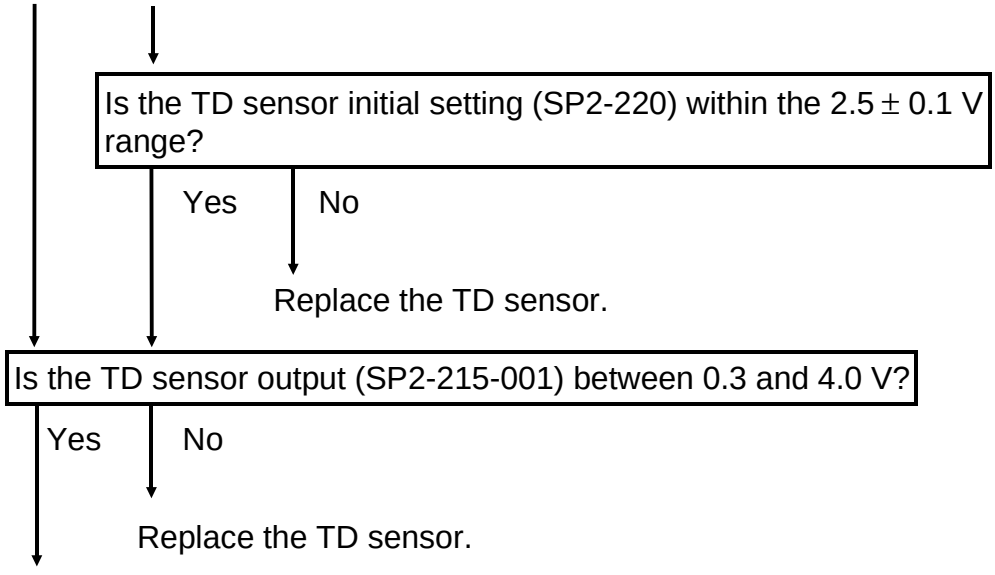

Set the toner supply mode to Detect Supply Mode.
To do this, set SP2-208-001 to 3.

3. SERVICE CALL CONDITIONS

3.1 SUMMARY

When a service call condition occurs, SC codes are displayed in the copy counter. The first three digits are displayed in the copy counter. Hold down the "•" key to display the last two digits.

Example:
When the copier detects the E507 condition, "E-5" is displayed in the copy counter. Hold down the "•" key, and "07" is displayed in the copy counter.

There are 4 levels of service call conditions.

Level	Definition
A	The system goes down. The SC can only be reset by a service representative using SP5-810 (see the note below), to prevent the machine from being damaged. The copier cannot be operated at all.
B	The system goes down. The SC can be reset by turning the main switch off and on if the SC is caused by a detection error.
C	The copier can be operated as usual except for the unit or feature related to the service call.
D	Only the SC counter is incremented. The copier can be operated as usual.

NOTE: For safety reasons, Level A service calls cannot be cleared by turning the main switch off/on. The following procedure must be performed to clear these service call conditions after servicing the machine.

1. Turn on the main switch.
2. Enter SP5-810 (SC code reset) and press the Enter key.
3. Exit SP mode and turn the main switch off and on.

3.2 SC CODE TABLE

This table summarizes the SC codes.

SC Code No.	Description	Classification
E101	Exposure lamp error	A
E103	Frequency detection error	B
E120	Scanner home position error 1	B
E121	Scanner home position error 2	B
E124	Scanner drive motor error	B
E140	Lens vertical home position sensor error 1	B
E141	Lens vertical home position sensor error 2	B
E142	Lens horizontal home position sensor error 1	B
E143	Lens horizontal home position sensor error 2	B
E144	3rd scanner home position sensor error 1	B

SC Code No.	Description	Classification
E145	3rd scanner home position sensor error 2	B
E191	Auto ID sensor adjustment error	D
E302	Drum charge roller current leak	B
E346	Development bias leak	B
E351	ID sensor adjustment error	D
E352	TD sensor initial setting error	D
E353	V_{SP} abnormal (over 2.5 V)	D
E354	V_{SG} abnormal (under 2.5 V)	D
E355	TD sensor upper limit detection abnormal	D
E356	TD sensor lower limit detection abnormal	D
E405	Transfer belt/drum charge roller position abnormal	B
E440	Main motor lock	B
E442	Drum charge thermistor abnormal	D
E501	Main body upper tray lift motor error	C
E502	Main body lower tray lift motor error	C
E503	Paper tray unit 1st tray lift motor error	C
E504	Paper tray unit 2nd tray lift motor error	C
E505	Paper tray unit 3rd tray lift motor error	C
E506	Paper tray unit main motor lock	C
E507	LCT lift motor error	C
E522	Duplex tray end fence jogger h.p. sensor error 1	C
E523	Duplex tray end fence jogger h.p. sensor error 2	C
E524	Duplex tray side fence jogger h.p. sensor error 1	C
E525	Duplex tray side fence jogger h.p. sensor error 2	C
E541	Fusing unit thermistor open	A
E542	Fusing temperature warm-up error	A
E543	Fusing overheat	A
E544	Fusing overheat	A
E547	Continuous fusing lamp ON condition	A
E548	Fusing ready temperature abnormal	A
E620	Main board – ARDF communication error	C
E621	Main board – Sorter communication error	B
E623	Main board – Paper tray unit communication error	C
E720	Sorter timing sensor (roller drive) output error	B
E721	Sorter timing sensor (bin lift) output error	C
E722	Sorter jogger h.p. sensor output error	C
E723	Sorter grip h.p. sensor output error	C
E724	S/S stapler error	C
E900	Total counter error 1	B
E901	Total counter error 2	B

3.3 WARNING SC CODE TABLE

SC code	Description	SC Timing	Prohibited Function	Note
E501	Upper tray lift motor error	When the upper tray is selected	Paper feed from the upper tray	(1)
E502	Lower tray lift motor error	When the lower tray is selected	Paper feed from the lower tray	(2)
E503	1st tray lift motor error (Paper Tray Unit)	When that tray is selected	Paper feed from that tray	(3)
E504	2nd tray lift motor error (Paper Tray Unit)	When that tray is selected	Paper feed from that tray	(3)
E505	3rd tray lift motor error (Paper Tray Unit)	When that tray is selected	Paper feed from that tray	(3)
E506	Paper tray unit motor error	When a paper tray unit is selected	Paper feed from the paper tray unit	(4)
E507	LCT lift motor error	When the LCT is selected	Paper feed from the LCT	(5)
E522	Duplex tray end fence HP. not ON	When duplex mode is selected	Duplex mode	(6)
E523	Duplex tray end fence HP. not OFF	When duplex mode is selected	Duplex mode	(6)
E524	Duplex side fence jogger HP. not ON	When duplex mode is selected	Duplex mode	(6)
E525	Duplex side fence jogger HP. not OFF	When duplex mode is selected	Duplex mode	(6)
E620	Main board-ADF communication error	When an original is set on the ADF	ADF mode	(7)
E623	Main board-Paper tray unit communication error	When a paper tray unit is selected	Paper feed from the paper tray unit	(4)
E721	Sorter bin drive motor error	When sort mode is selected	Sort, stack, or staple mode	(8)
E722	Sorter jogger motor error	When sort mode is selected	Sort, stack, or staple mode	(8)
E723	Sorter grip motor error	When staple mode is selected	Staple mode	(8)
E724	Sorter stapler stapler motor error	When staple mode is selected	Staple mode	(8)

NOTE:

(1) A153/A155 copiers only
(2) A153/A155/A156 copiers only
(3) When a paper tray unit (500×2, 500×3) is installed
(4) When a paper tray unit is installed
(5) LCT machines only
(6) A156/A160 copiers only
(7) When an ADF is installed
(8) When a sorter stapler is installed

3.4 C-CODE TABLE

C-code	Condition	Message on LCD (A156 copier only)
C1	Front cover open	Cover open Close the front cover
C2	Paper exit cover open	—
C3	Paper tray unit cover open	Close the right side of paper tray unit
C4	LCT cover open	Cover open Close the LCT cover
C5	Sorter cover open or sorter not set	Close sorter cover or set the sorter
C6	ADF cover open	Cover open Close the ADF cover
C7	Right cover open	Close the right side of main copier unit

3.5 U-CODE TABLE

U-code	Condition	Message on LCD (A156 copier only)
U2	Key counter not set	Insert a key counter or enabling device/ Enter a user code
U6	Fusing unit not set	Open the front cover and reset the fusing unit
U7	Duplex unit not set	Insert the duplex unit

3.6 SC CODE DESCRIPTIONS

E101: Exposure lamp error

- Definition - [A]
  The exposure lamp stays on for longer than 10 seconds. The temperature around the optics reflector reaches 121°C.

- Possible causes -
  - Exposure lamp open
  - Exposure lamp thermofuse open

E103: Frequency detection error

- Definition - [B]
  The ac drive board (50/60Hz) did not receive a frequency in the 45 ~ 65 Hz range.

- Possible causes -
  - Abnormal power supply
  - Noise interference

E120: Scanner home position error 1

- Definition - [B]
  The scanner home position sensor remains de-actuated for 7.5 seconds after the scanners start moving from the return position.

- Possible causes -
  - Scanner home position sensor failure
  - CN114 on the main board not connected correctly
  - Incorrect scanner wire position

E121: Scanner home position error 2

- Definition - [B]
  The scanner home position sensor remains actuated for 0.5 seconds after the scanner starts.

- Possible causes -
  - Scanner home position sensor failure
  - Defective scanner drive motor
  - CN114 on the main control board not connected correctly
  - Incorrect scanner wire position

E124: Scanner drive motor error

- Definition - [B]
  During initialization and copying, the difference in the number of scanner drive motor steps between forward and reverse exceeds a certain number.

- Possible causes -
  - Scanner movement too heavy
  - Scanner drive motor defective
  - Main control board defective

E140: Lens vertical home position sensor error 1

- Definition - [B]
  The lens vertical home position sensor remains de-actuated 3.0 seconds after the lens starts returning to the home position.

- Possible causes -
  - Lens vertical home position sensor defective
  - Lens vertical drive motor defective
  - DC power supply board defective (check FU303)

E141: Lens vertical home position sensor error 2

- Definition - [B]
  The lens vertical home position sensor remains actuated 2.0 seconds after the lens left the home position.

- Possible Causes -
  - Lens vertical home position sensor defective
  - Lens vertical drive motor defective
  - CN116 on the main control board is not connected correctly
  - DC power supply board defective (check FU303)

E142: Lens horizontal home position sensor error 1

- Definition - [B]
  The lens horizontal home position sensor remains de-actuated 3.7 seconds after the lens starts returning to the home position.

- Possible Causes -
  - Lens horizontal home position sensor defective
  - Lens horizontal drive motor defective
  - DC power supply board defective (check FU303)

E143: Lens horizontal home position sensor error 2

- Definition - [B]

  The lens horizontal home position sensor remains actuated 2.0 seconds after the lens left the home position.

- Possible Causes -
  - Lens horizontal home position sensor defective
  - Lens horizontal drive motor defective
  - CN120 on the main control board not connected correctly
  - DC power supply board defective (check FU303)

E144: 3rd scanner home position sensor error 1

- Definition - [B]

  The 3rd scanner home position sensor remains de-activated 1.0 second after the 3rd scanner starts returning to the home position.

- Possible Causes -
  - 3rd scanner home position sensor defective
  - 3rd scanner drive motor defective
  - DC power supply board defective (check FU303)

E145: 3rd scanner home position sensor error 2

- Definition - [B]

  The 3rd scanner home position sensor remains actuated 3.7 seconds after the 3rd scanner left the home position.

- Possible Causes -
  - 3rd scanner home position sensor defective
  - 3rd scanner drive motor defective
  - DC power supply board defective (check FU303)

E191: Auto ID sensor adjustment error (at the 1K copies process control)

- Definition - [D]
  1. ADS sensor output is lower than the 2.7 V target at the maximum gain for the sensor.
  2. ADS sensor output is higher than the 2.7 V target at the minimum gain for the sensor.

- Possible Causes -
  - ADS sensor board defective
  - ADS sensor board poorly connected
  - Main control board defective

E302: Drum charge roller current leak

- Definition - [B]
  A charge current leak signal is detected.

- Possible Causes -
  - Drum charge roller unit defective
  - CB high voltage supply board defective

E346: Development bias leak

- Definition - [B]
  A development bias leak signal is detected.

- Possible Causes -
  - Sleeve roller receptacle damage
  - CB high voltage supply board defective

E351: ID sensor adjustment error

- Definition - [D]
  When the ID sensor output (V_{SG}) falls out of the adjustment target (3.8 ~ 4.2 V) during the process control self check.

- Possible Causes -
  - ID sensor board defective
  - Dirty ID sensor
  - Main control board defective

E352: TD sensor initial setting error

- Definition - [D]
  TD sensor output does not reach a value between 2.4 and 2.6 V when performing the developer initial setting procedure.

- Possible Causes -
  - TD sensor defective
  - Main control board defective
  - TD sensor connector is disconnected.

E353: V_{SP} abnormal

- Definition - [D]
  The detected V_{SP} goes above 2.5 volts.

- Possible Causes -
  - Dirty ID sensor
  - ID sensor board defective
  - Main control board defective

E354: V_{SG} abnormal

- Definition - [D]
  Detected V_{SG} is equal to or is below 2.5 volts.

- Possible Causes -
  - Dirty ID sensor
  - ID sensor board defective
  - Main control board defective



E355: TD sensor upper limit detection abnormal

- Definition - [D]
  TD sensor output exceeds 4.0 volts during copy cycles.

- Possible Causes -
  - TD sensor defective
  - Main control board defective
  - Toner supply system defective

E356: TD sensor lower limit detection abnormal

- Definition - [D]
  TD sensor output falls below than 0.3 volts during copy cycles.

- Possible Causes -
  - TD sensor defective
  - Main control board defective
  - Toner supply system defective
  - TD sensor connector is disconnected.

E405: Transfer belt/drum charge roller position abnormal

- Definition - [B]
  The transfer belt contact home position sensor is not activated.

- Possible Causes -
  - Transfer belt contact home position sensor defective
  - Transfer belt contact clutch defective
  - Main control board defective

E440: Main motor lock

- Definition - [B]
  A main motor lock signal is detected.

- Possible Causes -
  - Too much load on the drive mechanism
  - Main motor defective or poor connection
  - Main motor control board defective
  - Main control board defective

E442: Drum charge thermistor abnormal

- Definition - [D]
  The temperature detected by the drum charge thermistor drops below 0 °C or rises above 100 °C.

- Possible Causes -
  - Drum charge thermistor open
  - Main control board defective

E501: Main body upper tray lift motor abnormal (A153/A155 only)

E502: Main body lower tray lift motor abnormal (A153/A155/A156 only)

E503: Paper tray unit 1st tray lift motor abnormal (A549/A550 optional paper tray unit only)

E504: Paper tray unit 2nd tray lift motor abnormal (A549/A550 optional paper tray unit only)

E505: Paper tray unit 3rd tray lift motor abnormal (A549/A550 optional paper tray unit only)

- Definition - [C]

The paper limit sensor is not actuated after the tray lift motor has been on for 10.0 seconds.

- Possible Causes -

- Upper limit sensor defective
- Tray lift motor defective
- Main control board defective

E506: Paper tray unit main motor lock (A549/A550/A553 optional paper tray unit only)

- Definition - [C]

A paper tray unit main motor lock signal is detected.

- Possible Causes -

- Paper tray unit main motor defective
- Interface board defective
- Main control board defective

E507: LCT lift motor abnormal (A155/A156/A159/A160 only)

- Definition - [C]

The LCT upper limit sensor is not actuated after the LCT lift motor has been on for 15.0 seconds.

- Possible Causes -

- LCT upper limit sensor defective
- LCT lift motor defective
- LCT interface board defective
- Main control board defective

E522: End fence jogger home position sensor error 1 (A156/A160 only)

- Definition - [C]

The end fence jogger home position sensor remains de-actuated for 8.0 seconds when the jogger home position initialization procedure is performed.

- Possible Causes -

- End fence jogger home position sensor defective
- End fence jogger motor defective
- Duplex control board defective
- Main control board defective

E523: End fence jogger home position sensor error 2 (A156/A160 only)

- Definition - [C]

The end fence jogger home position sensor remains actuated for 1.0 second when the jogger home position initialization procedure is performed.

- Possible Causes -

- End fence jogger home position sensor defective
- End fence jogger motor defective
- Duplex control board defective
- Main control board defective

E524: Side fence jogger home position sensor error 1 (A156/A160 only)

- Definition - [C]

The side fence jogger home position sensor remains de-actuated for 5.0 seconds when the jogger home position initialization procedure is performed.

- Possible Causes -

- Side fence jogger home position sensor defective
- Side fence jogger motor defective
- Duplex control board defective
- Main control defective

E525: Side fence jogger home position sensor error 2 (A156/A160 only)

- Definition - [C]

  The side fence jogger home position sensor remains actuated for 1.0 second when the jogger home position initialization procedure is performed.

- Possible Causes -

  - Side fence jogger home position sensor defective.
  - Side fence jogger motor defective
  - Duplex control board defective
  - Main control defective

E541: Fusing thermistor open

- Definition - [A]

  The output of the fusing thermistor (TH1 or TH2 or both) goes to 5 volts, corresponding to 0°C.

- Possible Causes -

  - Fusing thermistor open
  - Main control board defective
  - Fusing lamp open

E542: Fusing temperature warm-up error

- Definition - [A]

  The fusing temperature does not reach the ready temperature within 3.0 minutes after the main switch is turned on.

- Possible Causes -

  - Fusing thermistor defective or out of position
  - Fusing lamp open
  - Fusing thermofuse open
  - AC drive board defective (check the triac)

E543: Fusing overheat (measured directly from the thermistor)

- Definition - [A]

  A fusing temperature of over 230 °C is detected 5 times (this takes 5 seconds).

- Possible Causes -

  - Fusing thermistor defective
  - AC drive board defective (check the triac)
  - Main control board defective

E544: Fusing overheat (back-up for E543)

- Definition - [A]
  A fusing temperature of over 250 °C is detected 5 times by the main control board (this takes 5 seconds)

- Possible Causes -
  - AC drive board defective (check the triac)
  - Fusing thermistor defective
  - Main control board defective

E547: Continuous fusing lamp on condition

- Definition - [A]
  The fusing lamp stays on at full power for 70.0 seconds while in the stand-by condition after warm-up is completed.

- Possible Causes -
  - Fusing thermistor defective

E548: Fusing ready temperature abnormal

- Definition - [A]
  The fusing temperature goes 40 °C below or 40 °C over the stand-by temperature after warm-up is completed.

- Possible Causes -
  - Fusing thermistor connector not connected properly

E620: Communication error between main control board and ARDF

- Definition - [C]
  The main CPU cannot start communication with the ARDF properly.

- Possible Causes -
  - Poor connection between the main control board and ARDF
  - Main control board defective
  - DF main board defective

E621:Communication error between main control board and sorter

- Definition - [B]

The main CPU cannot start communication with the sorter properly.

- Possible Causes -

- Poor connection between the main control board and the sorter
- Main control board defective
- Sorter main board defective

E623: Communication error between main control board and paper tray unit

- Definition - [C]

The main CPU cannot start communication with the paper tray unit properly.

- Possible Causes -

- Poor connection between the main control board and the paper tray unit
- Main control board defective
- Paper tray unit interface board defective

E720 - Timing Sensor (Roller Drive) Output Error (A554/A555)

- Definition - [B]

When the roller drive/transport motor is turning, the timing sensor takes over 500 ms to change.

- Possible Causes -

- The timing sensor is defective.
- The rroller drive/transport motor is defective.
- The main control board is defective.

E721 - Timing Sensor (Bin Lift) Output Error (A554/A555)

- Definition - [C]

When the bin lift/bin drive motor is turning, the timing sensor takes over 250 ms to change.

- Possible Causes -

- The timing sensor is defective.
- The bin lift/bin drive motor is defective.
- The main control board is defective.

E722 - Jogger Home Position Sensor Output Error (A554/A555)

- Definition- [C]
  - When the jogger bar moves forward, the home position sensor takes over 100 ms to be deactivated.
  - When the jogger bar moves backward, the home position sensor takes over 800 ms to be activated.

- Possible Causes -
  - The jogger home position sensor is defective.
  - The jogger motor is defective.
  - The main control board is defective.

E723 - Grip Home Position Sensor Output Error (A554/A555)

- Definition- [C]
  - When the grip motor rotates, the grip home position sensor takes over 0.2 s to be deactivated.
  - When the grip motor rotates in reverse, the grip home position sensor takes over 2.5 s to be deactivated.

- Possible Causes -
  - The grip home position sensor is defective.
  - The grip motor is defective.
  - The main control board is defective.

E724 - Stapler Error (A554/A555)

- Definition- [C]

  The stapler motor takes more than 800 ms for one staple operation (from home position to home position).

- Possible Causes -
  - The stapler is defective.
  - The main control board is defective.

E900: Total counter error 1

- Definition - [B]
  The total counter does not turn on.

- Possible Causes -
  - Total counter defective
  - CN121 on the main control board not connected correctly

E901: Total counter error 2

- Definition - [B]
  The total counter does not turn off.

- Possible Causes -
  - Total counter defective

4. BLOWN FUSE CONDITIONS

Fuse	Rating		Symptom when turning on the Main Switch
	115 V	220 ~ 240 V	
DC Power Supply Board			
FU301	8 A/125 V	5 A/250 V	No response
FU302	6.3 A/125 V	6.3 A/250 V	Copying is disabled. Paper jam at location A when the Print key is pressed.
FU303	6.3 A/125 V	6.3 A/250 V	E140, E141, E142, E143, E144, or E145 lights depending on the peripherals that are attached to the copier.
FU304	6.3 A/125 V	6.3 A/250 V	C5 lights on machines that have a sorter installed. Also the DF does not communicate with the copier (the DF stays off).
AC Drive Board (for 115 V machines only)			
FU371	15 A/125 V	—	No response

5. ELECTRICAL COMPONENT DEFECTS

5.1 SENSORS

Component (Symbol)	CN	Condition	Symptom (When the main switch is turned on.)
By-pass Feed Paper Width (S1)	126-9~12	Open	The copier does not turn on.
		Shorted	The CPU cannot detect the proper paper size.
By-pass Feed Paper End (S2)	126-7	Open	The Paper End indicator lights even if paper is placed on the by-pass feed table.
		Shorted	The Paper End indicator does not light even if there is no paper on the by-pass feed table.
Upper Tray Paper End [Non-duplex machines only] (S3)	131-2	Open	The Paper End indicator lights even if paper is placed on the by-pass feed table.
		Shorted	The Paper End indicator does not light even if there is no paper on the by-pass feed table.
Upper Relay (S4)	128-4	Open	Paper jam type A occurs whenever a copy is made.
		Shorted	The Paper Jam A indicator lights even if there is no paper.
Upper Tray Upper Limit [A153/A155 machines only] (S5)	131-8	Open	The Paper End indicator lights even if there is paper on the tray.
		Shorted	The tray bottom plate locks at the upper position.
Lower Tray Paper End (S6)	134-2	Open	The Paper End indicator lights even if paper is present.
		Shorted	The Paper End indicator does not light even if there is no paper.
Lower Relay (S7)	128-1	Open	A paper jam type A occurs whenever a copy is made.
		Shorted	The Paper Jam A indicator lights even if there is no paper.
Lower Tray Upper Limit [A153/A155/ A156 mchines only] (S8)	134-8	Open	The Paper End indicator lights even if there is paper on the tray.
		Shorted	The tray bottom plate locks at the upper position.
LCT Lower Limit [LCT machines only] (S9)	132-10	Open	The LCT bottom plate does not lower.
		Shorted	When the bottom plate is lowered, it locks at the lowest position.
LCT Paper End [LCT machines only] (S10)	129-7	Open	The Paper End indicator lights even if there is paper in the LCT.
		Shorted	The Paper End indicator does not light even if there is no paper.

Component (Symbol)	CN	Condition	Symptom (When the main switch is turned on.)
LCT Upper Limit [LCT machines only] (S11)	129-4	Open	The bottom plate does not rise even if paper is placed in the LCT.
		Shorted	The bottom plate rises and locks at the upper position.
Registration (S12)	128-8	Open	A paper jam type A occurs whenever a copy is made.
		Shorted	The Paper Jam A indicator lights even if there is no paper.
Imge Density (S13)	106-1	Open	A VSP/VSG abnormal condition occurs. (The Manual or Auto I/D indicator blinks.)
		Shorted	
Toner Density (S14)	122-12	Open	E355 is displayed.
		Shorted	E356 is displayed.
Lens Horizontal HP (S15)	120-2	Open	E143 is displayed.
		Shorted	E142 is displayed.
Lens Vertical HP (S16)	116-2	Open	E141 is displayed.
		Shorted	E140 is displayed.
Scanner HP (S17)	114-6	Open	E121 is displayed.
		Shorted	E120 is displayed.
3rd Scanner HP (S18)	116-5	Open	E144 is displayed.
		Shorted	E145 is displayed.
Original Length-2 (S19)	118-7	Open	The CPU cannot detect the original size properly. APS and ARE do not function correctly.
		Shorted	
Fusing Exit (S20)	109-2	Open	A paper jam type B occurs whenever a copy is made.
		Shorted	The Paper Jam B indicator lights even if there is no paper.
Platen Cover (S21)	113-4	Open	APS and ARE do not function properly.
		Shorted	No symptom
Toner End (S22)	122-8	Open	Toner is added even if there is a sufficient amount of toner inside the toner supply unit.
		Shorted	Toner is not supplied even if there is no toner inside the toner supply unit.
Auto Response (S23)	503-2	Open	The copier does not exit the "Energy Saver" mode even if an operator approaches the machine.
		Shorted	"Energy Saver" mode does not work.
Transfer Belt Contract HP (S24)	105-12	Open	No symptom
		Shorted	E405 is displayed.
Auto Image Density [ADS Sensor] (S25)	114-2	Open	The image density will be abnormal.
		Shorted	
Original Width (S26)	119-2~5	Open	The CPU cannot detect the original size properly. APS and ARE do not function correctly.
		Shorted	

Component (Symbol)	CN	Condition	Symptom (When the main switch is turned on.)
Original Length-1 (S27)	118-3	Open	The CPU cannot detect the original size properly. APS and ARE do not function correctly.
		Shorted	
Duplex Paper End [Duplex machines only] (S28)	486-5	Open	"Copies Left In The Duplex Tray" is displayed or the Paper Jam Z indicator lights even if there is no paper in the duplex tray.
		Shorted	Only one rear side copy is made regardless of the quantity of copies.
Duplex Turn [Duplex machines only] (S29)	140-9	Open	The machine indicates that originals should be reset.
		Shorted	"Copies Left In The Duplex Tray" is displayed or the Paper Jam Z indicator lights even if there is no paper in the duplex tray.
Duplex Entrance [Duplex machines only] (S30	140-10	Open	"Copies Left In The Duplex Tray" is displayed or the Paper Jam Z indicator lights even if there is no paper in the duplex tray.
		Shorted	The Paper Jam C indicator lights even if there is no paper.
Side Fence Jogger HP [Duplex machines only] (S31)	140-7	Open	E525 is displayed.
		Shorted	E524 is displayed.
End Fence Jogger HP [Duplex machines only] (S32)	140-8	Open	E523 is displayed.
		Shorted	E522 is displayed.
Original Length [Option for N. American models] (S33)	118-7	Open	The CPU cannot detect the original size properly. APS and ARE do not function correctly.
		Shorted	

5.2 SWITCHES

Component	CN No.	condition	Symptom
By-pass Feed Table (SW1)	126-4	Open	The copier does not turn on.
		Shorted	By-pass feed cannot be selected.
Upper Tray [Non-duplex machines only] (SW2)	138-2	Open	The copier does not turn on.
		Shorted	The user can select the tray even if it is not in place; the Print key is active.
Lower Tray (SW3)	137-2	Open	The copier does not turn on.
		Shorted	The user can select the tray even if it is not in place; the Print key is active.
Tray Down [LCT machines only] (SW4)	132-6	Open	The LCT bottom plate does not lower.
		Shorted	The LCT bottom plate lowers even if there is paper in the LCT.
Upper Tray Paper Size [Non-duplex machines only] (SW5)	138-3~7	Open	The CPU cannot detect the proper paper size, and misfeeds may occur when a copy is made.
		Shorted	
Lower Tray Paper Size (SW6)	137-3~7	Open	The CPU cannot detect the proper paper size, and misfeeds may occur when a copy is made.
		Shorted	
Vertical Guide Set [Non-LCT machines only] (SW7)	127-8	Open	The power goes down when the vertical guide is opened.
		Shorted	The copier does not turn on.
LCT Cover-1 [LCT machines only] (SW8)	132-11	Open	The LCT bottom plate lowers even if there is paper in the LCT.
		Shorted	The LCT bottom plate does not rise even if the cover is closed.
LCT Cover-2 [LCT machines only] (SW9)	701-7	Open	E507 is displayed or the LCT bottom plate does not rise or lower.
		Shorted	
Main (SW10)	–	Open	The copier does not turn on.
		Shorted	The copier does no turn off.
Front Cover Safety (SW11)	–	Open	"C1" is displayed even if the front cover is closed.
		Shorted	"C1" is not displayed even if the front cover is opened.
Exit Cover Safety [A157/A159/A160 machines only] (SW12)	109-11	Open	"C2" is displayed even if the front cover is closed.
		Shorted	"C2" is not displayed even if the front cover is opened.

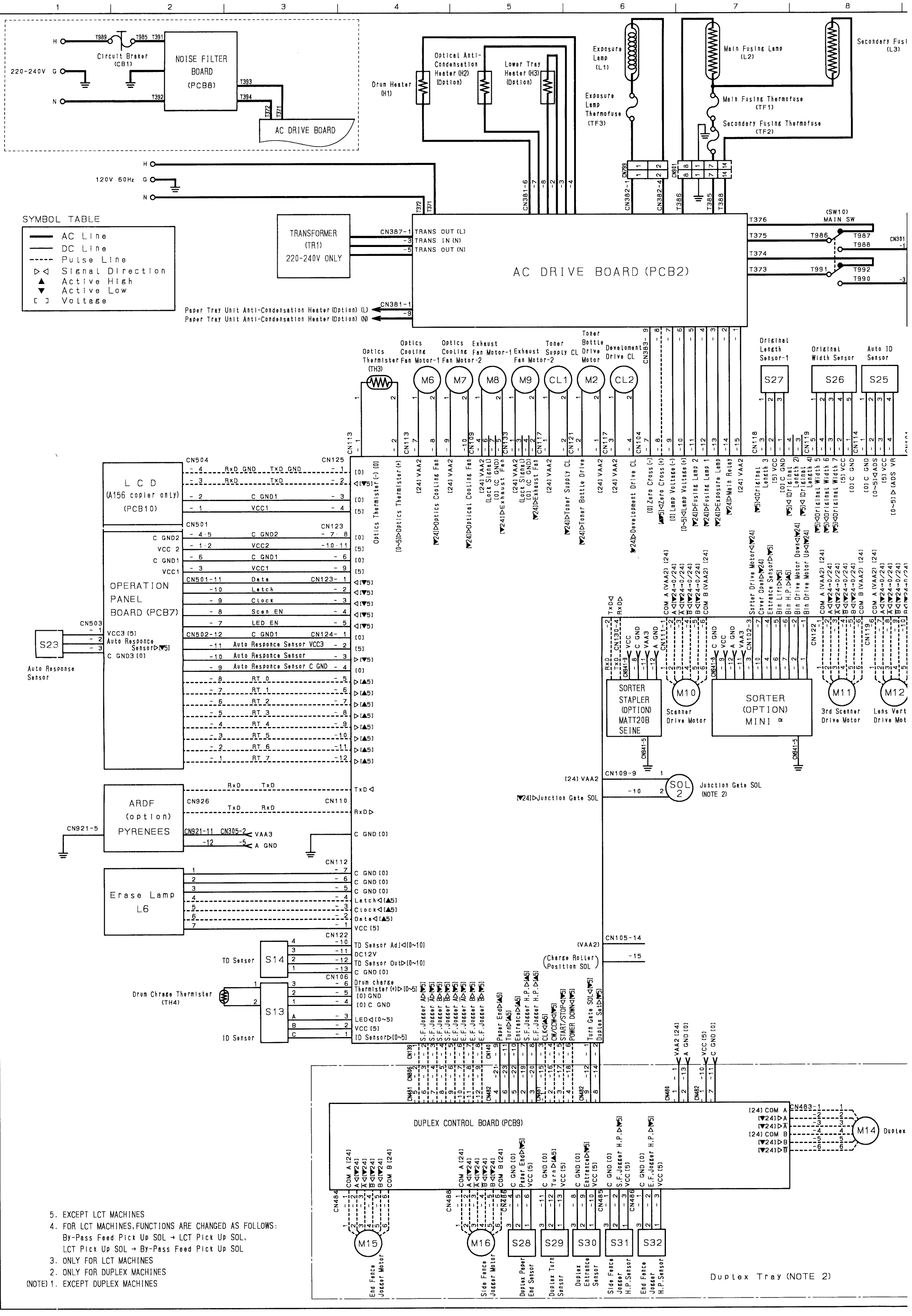
H
T989
T985
T391
Circuit Braker
(CB1)
NOISE FILTER
BOARD
(PCB8)
220-240V G
N
T392
T393
T394
T372
T371
AC DRIVE BOARD
Drum Heater
(H1)
Optical Anti-
Condensation
Heater (H2)
(Option)
Lower Tray
Heater (H3)
(Option)
Exposure
Lamp
(L1)
Exposure
Lamp
Thermofuse
(TF3)
Main Fusing Lamp
(L2)
Secondary Fusi
(L3)
Main Fusing Thermofuse
(TF1)
Secondary Fusing Thermofuse
(TF2)
120V 60Hz
CN381-6
CN382-1
CN382-4
CN799
CN801
T386
T385
T388
SYMBOL TABLE
AC Line
DC Line
Pulse Line
Signal Direction
Active High
Active Low
Voltage
TRANSFORMER
(TR1)
220-240V ONLY
CN387-1 TRANS OUT (L)
-3 TRANS IN (N)
-5 TRANS OUT (N)
AC DRIVE BOARD (PCB2)
(SW10)
MAIN SW
T376
T375
T374
T373
T986
T987
T988
T991
T992
T990
CN301
Paper Tray Unit Anti-Condensation Heater (Option) (L)
Paper Tray Unit Anti-Condensation Heater (Option) (N)
CN381-1
-9
Optics
Thermister
(TH3)
Optics
Cooling
Fan Motor-1
Optics
Cooling
Fan Motor-2
Exhaust
Fan Motor-1
Exhaust
Fan Motor-2
Toner
Supply CL
Toner
Bottle
Drive
Motor
Development
Drive CL
M6
M7
M8
M9
CL1
M2
CL2
CN383-9
Original
Length
Sensor-1
Original
Width Sensor
Auto ID
Sensor
S27
S26
S25
CN118
CN119
CN114
CN113
CN109
CN133
CN117
CN121
CN104
CN125
CN504
L C D
(A156 copier only)
(PCB10)
CN501
CN123
OPERATION
PANEL
BOARD (PCB7)
CN503
S23
Auto Response
Sensor
CN926
CN110
ARDF
(option)
PYRENEES
CN921-5
CN921-11
CN305-2
VAA3
A GND
CN112
Erase Lamp
L6
CN122
CN106
TD Sensor
S14
Drum Chrage Thermister
(TH4)
S13
ID Sensor
CN105-14
(VAA2)
(Charge Roller
Position SOL)
CN130-4
CN111-1
CN102-3
CN941-9
CN941-8
CN941-5
SORTER
STAPLER
(OPTION)
MATT20B
SEINE
M10
Scanner
Drive Motor
SORTER
(OPTION)
MINI α
M11
3rd Scanner
Drive Motor
M12
Lens Vert
Drive Mot
CN109-9
SOL
2
Junction Gate SOL
(NOTE 2)
DUPLEX CONTROL BOARD (PCB9)
CN483-1
M14
Duplex
CN484
CN488
CN486
CN485
M15
End Fence
Jogger Motor
M16
Side Fence
Jogger Motor
S28
Duplex Paper
End Sensor
S29
Duplex Turn
Sensor
S30
Duplex
Entrance
Sensor
S31
Side Fence
Jogger
H.P.Sensor
S32
End Fence
Jogger
H.P.Sensor
Duplex Tray (NOTE 2)
5. EXCEPT LCT MACHINES
4. FOR LCT MACHINES, FUNCTIONS ARE CHANGED AS FOLLOWS:
By-Pass Feed Pick Up SOL → LCT Pick Up SOL,
LCT Pick Up SOL → By-Pass Feed Pick Up SOL
3. ONLY FOR LCT MACHINES
2. ONLY FOR DUPLEX MACHINES
(NOTE) 1. EXCEPT DUPLEX MACHINES

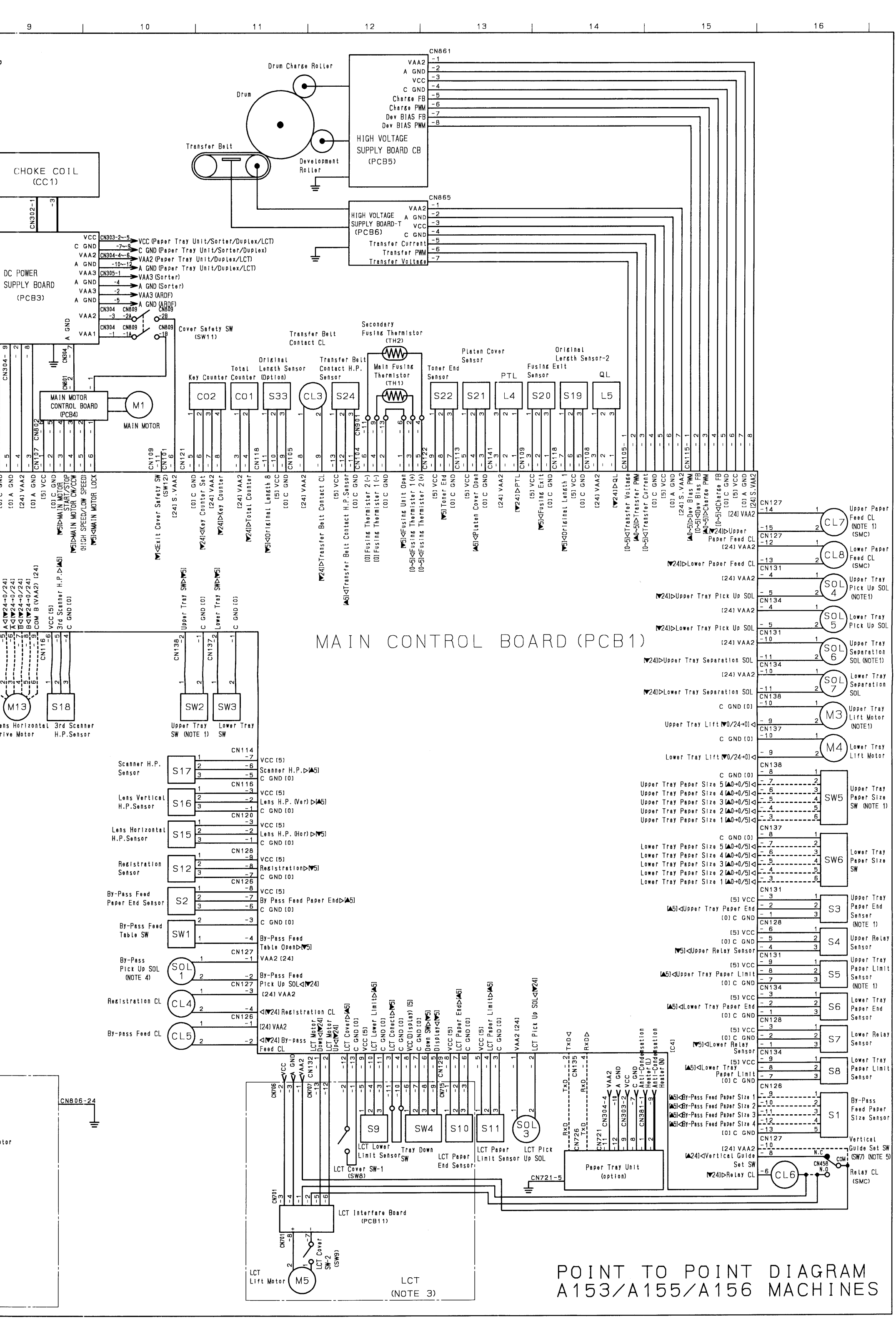
9
10
11
12
13
14
15
16
CHOKE COIL
(CC1)
CN302-1
-3
DC POWER
SUPPLY BOARD
(PCB3)
VCC
C GND
VAA2
A GND
VAA3
A GND
VAA3
A GND
VAA2
VAA1
A GND
CN303-2~-5
VCC (Paper Tray Unit/Sorter/Duplex/LCT)
-7~-9
C GND (Paper Tray Unit/Sorter/Duplex)
CN304-4~-6
VAA2 (Paper Tray Unit/Duplex/LCT)
-10~-12
A GND (Paper Tray Unit/Duplex/LCT)
CN305-1
VAA3 (Sorter)
-4
A GND (Sorter)
-2
VAA3 (ARDF)
-5
A GND (ARDF)
CN304 -3 CN809 -2A
CN809 -2B
CN304 -1 CN809 -1A
CN809 -1B
Cover Safety SW
(SW11)
MAIN MOTOR
CONTROL BOARD
(PCB4)
M1
MAIN MOTOR
Drum Charge Roller
Drum
Transfer Belt
Development
Roller
CN861
VAA2 -1
A GND -2
VCC -3
C GND -4
Charge FB -5
Charge PWM -6
Dev BIAS FB -7
Dev BIAS PWM -8
HIGH VOLTAGE
SUPPLY BOARD CB
(PCB5)
CN865
HIGH VOLTAGE
SUPPLY BOARD-T
(PCB6)
VAA2 -1
A GND -2
VCC -3
C GND -4
Transfer Current -5
Transfer PWM -6
Transfer Voltage -7
Transfer Belt
Contact CL
Secondary
Fusing Thermistor
(TH2)
Main Fusing
Thermistor
(TH1)
Key Counter
Total
Counter
Original
Length Sensor
(Option)
Transfer Belt
Contact H.P.
Sensor
Toner End
Sensor
Platen Cover
Sensor
Fusing Exit
Sensor
Original
Length Sensor-2
PTL
QL
C02
C01
S33
CL3
S24
S22
S21
L4
S20
S19
L5
MAIN CONTROL BOARD (PCB1)
M13
Lens Horizontal
Drive Motor
S18
3rd Scanner
H.P.Sensor
SW2
Upper Tray
SW (NOTE 1)
SW3
Lower Tray
SW
Scanner H.P.
Sensor
S17
Lens Vertical
H.P.Sensor
S16
Lens Horizontal
H.P.Sensor
S15
Registration
Sensor
S12
By-Pass Feed
Paper End Sensor
S2
By-Pass Feed
Table SW
SW1
By-Pass
Pick Up SOL
(NOTE 4)
SOL 1
Registration CL
CL4
By-pass Feed CL
CL5
CN114 -7 VCC [5]
-6 Scanner H.P.▷[▲5]
-5 C GND [0]
CN116 -3 VCC [5]
-2 Lens H.P. (Ver) ▷[▲5]
-1 C GND [0]
CN120 -3 VCC [5]
-2 Lens H.P. (Hor) ▷[▼5]
-1 C GND [0]
CN128 -9 VCC [5]
-8 Registration▷[▼5]
-7 C GND [0]
CN126 -8 VCC [5]
-7 By Pass Feed Paper End▷[▲5]
-6 C GND [0]
-3 C GND [0]
-4 By-Pass Feed
Table Open▷[▼5]
CN127 -1 VAA2 [24]
-2 By-Pass Feed
Pick Up SOL◁[▼24]
CN127 -3 [24] VAA2
-4 ◁[▼24] Registration CL
CN126 -1 [24] VAA2
-2 ◁[▼24] By-pass
Feed CL
CN806-24
CN707
CN701
LCT Interfare Board
(PCB11)
LCT
Lift Motor
M5
LCT Cover
SW-2
(SW9)
LCT
(NOTE 3)
LCT Cover SW-1
(SW8)
LCT Lower
Limit Sensor
Tray Down
SW
LCT Paper
End Sensor
LCT Paper
Limit Sensor
LCT Pick
Up SOL
S9
SW4
S10
S11
SOL 3
Paper Tray Unit
(option)
CN721-5
CN127 -14 [24] VAA2 -15 CL7 Upper Paper Feed CL (NOTE 1) (SMC)
CN127 -12 [24] VAA2 -13 CL8 Lower Paper Feed CL (SMC)
CN131 -4 [24] VAA2 -5 SOL 4 Upper Tray Pick Up SOL (NOTE1)
CN134 -4 [24] VAA2 -5 SOL 5 Lower Tray Pick Up SOL
CN131 -10 [24] VAA2 -11 SOL 6 Upper Tray Separation SOL (NOTE1)
CN134 -10 [24] VAA2 -11 SOL 7 Lower Tray Separation SOL
CN138 -10 C GND [0] -9 M3 Upper Tray Lift Motor (NOTE1)
CN137 -10 C GND [0] -9 M4 Lower Tray Lift Motor
CN138 -8 C GND [0] -7 -6 -5 -4 -3 SW5 Upper Tray Paper Size SW (NOTE 1)
CN137 -8 C GND [0] -7 -6 -5 -4 -3 SW6 Lower Tray Paper Size SW
CN131 -3 [5] VCC -2 -1 S3 Upper Tray Paper End Senser (NOTE 1)
CN128 -6 [5] VCC -5 -4 S4 Upper Relay Sensor
CN131 -9 [5] VCC -8 -7 S5 Upper Tray Paper Limit Sensor (NOTE 1)
CN134 -3 [5] VCC -2 -1 S6 Lower Tray Paper End Sensor
CN128 -3 [5] VCC -2 -1 S7 Lower Relay Sensor
CN134 -9 [5] VCC -8 -7 S8 Lower Tray Paper Limit Sensor
CN126 -9 -10 -11 -12 -13 S1 By-Pass Feed Paper Size Sensor
CN127 -10 -8 CL6 Vertical Guide Set SW (SW7) (NOTE 5) Relay CL (SMC)
POINT TO POINT DIAGRAM
A153/A155/A156 MACHINES

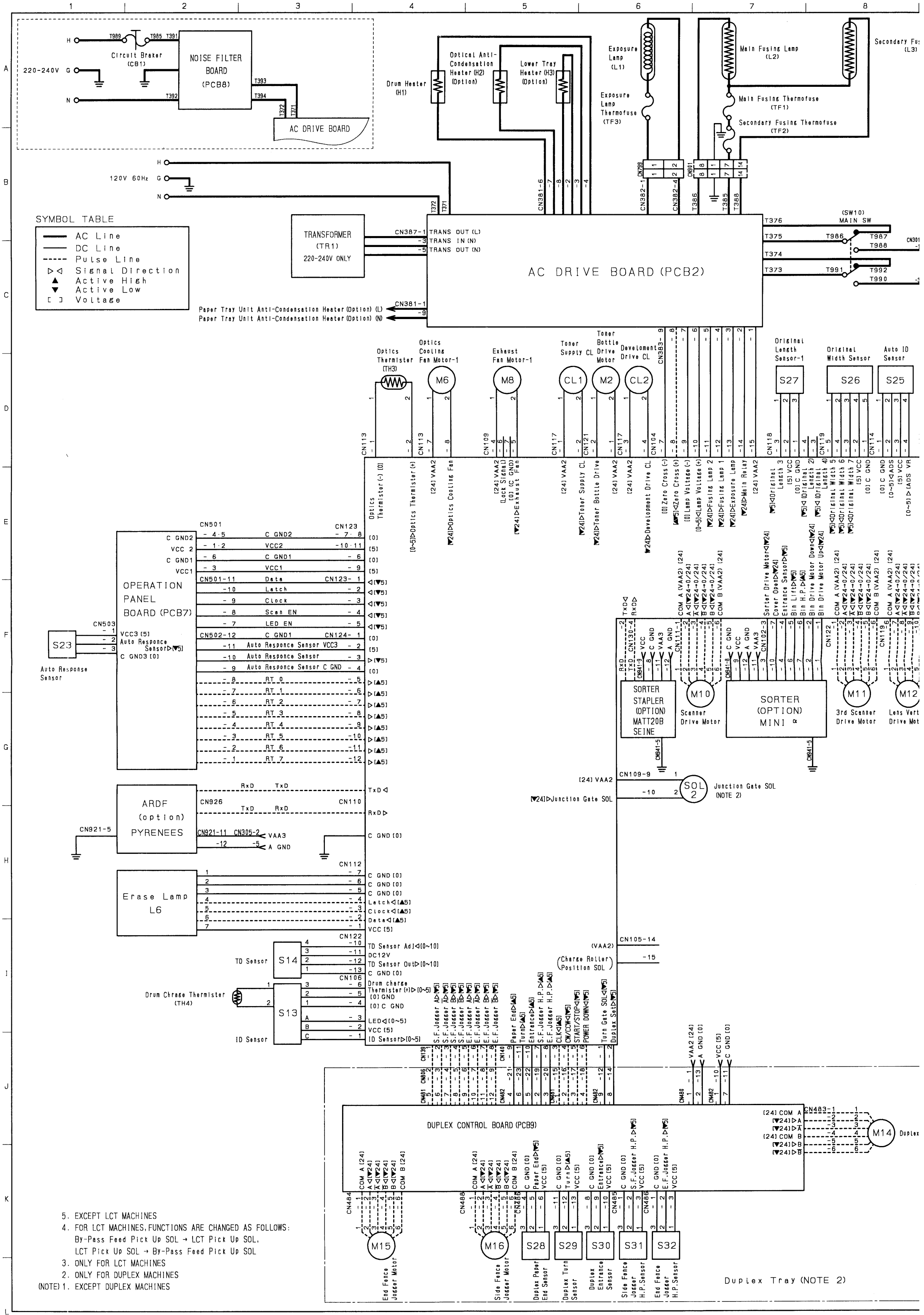

5. EXCEPT LCT MACHINES
4. FOR LCT MACHINES, FUNCTIONS ARE CHANGED AS FOLLOWS:
   By-Pass Feed Pick Up SOL → LCT Pick Up SOL,
   LCT Pick Up SOL → By-Pass Feed Pick Up SOL
3. ONLY FOR LCT MACHINES
2. ONLY FOR DUPLEX MACHINES

(NOTE) 1. EXCEPT DUPLEX MACHINES

MAIN CONTROL BOARD (PCB1)

POINT TO POINT DIAGRAM
A157/A159/A160 MACHINES

COPIER ELECTRICAL COMPONENT LAYOUT

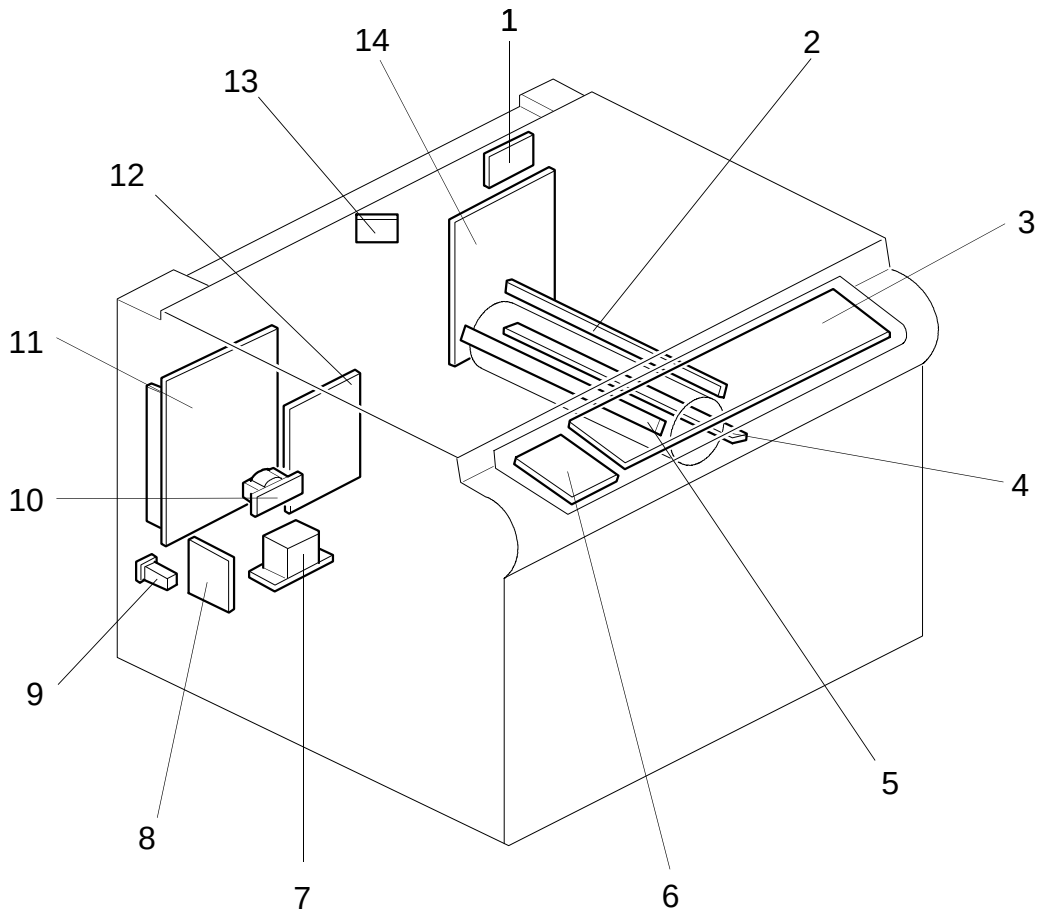

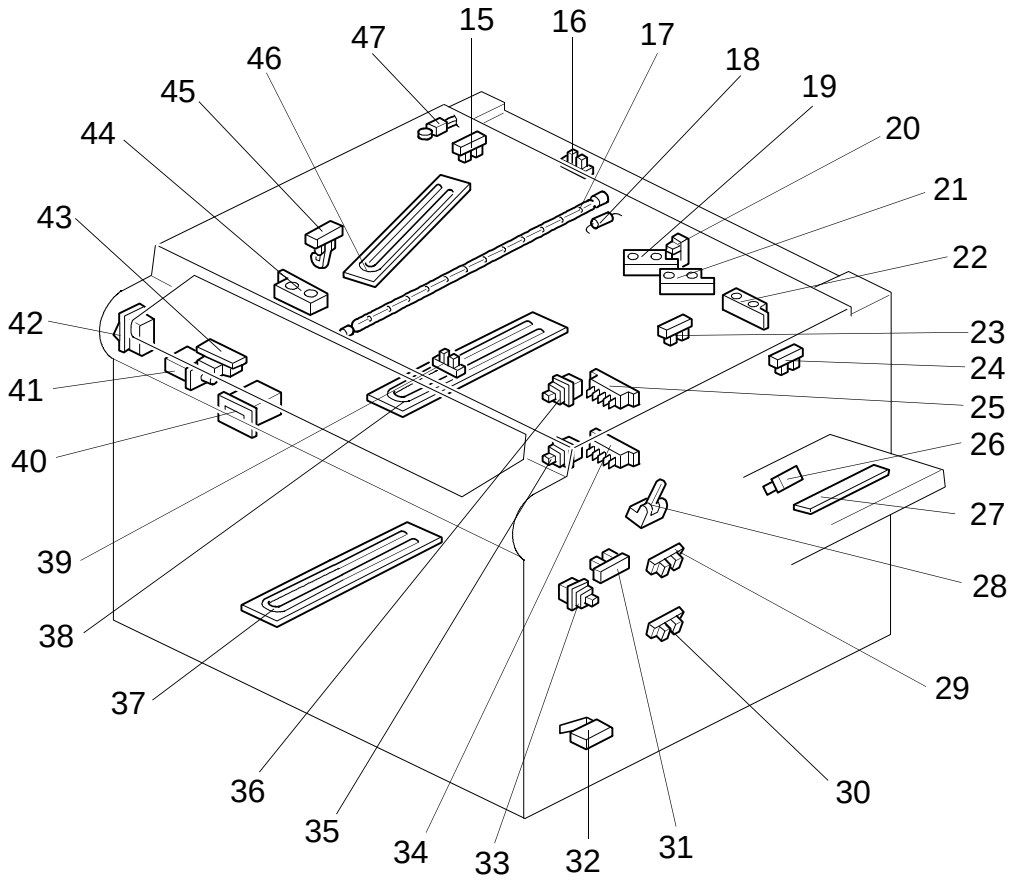
47
15
16
17
18
19
20
21
22
23
24
25
26
27
28
29
30
31
32
33
34
35
36
37
38
39
40
41
42
43
44
45
46

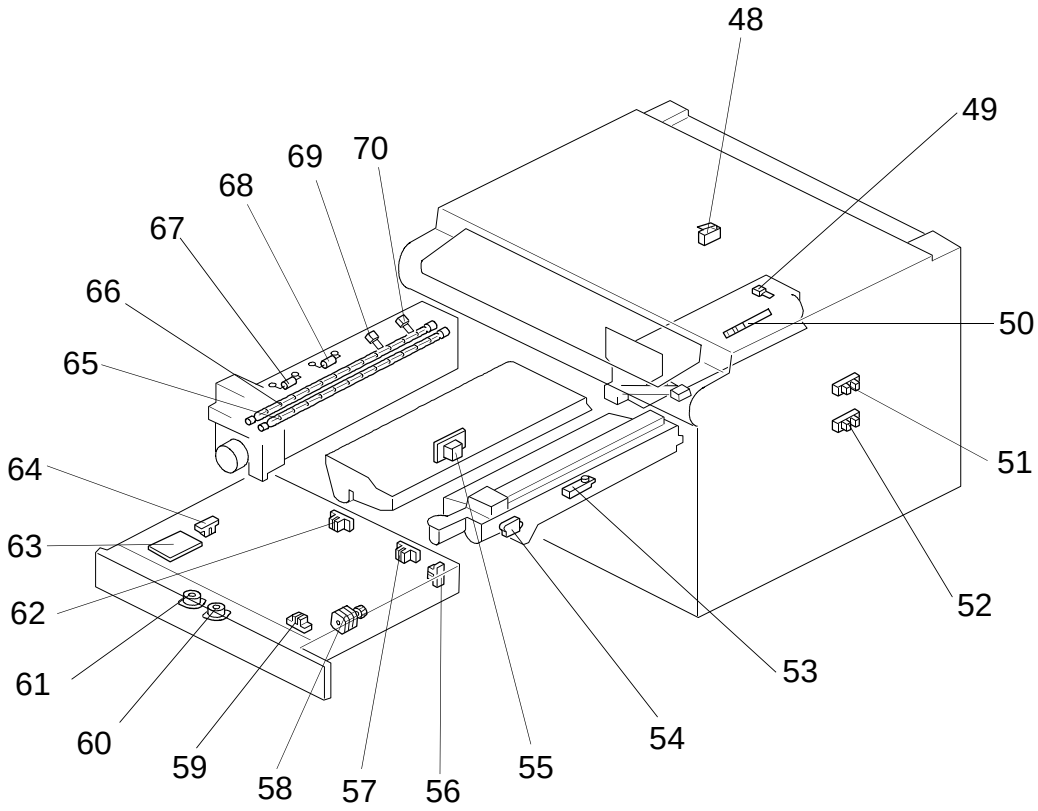
48
49
70
69
68
67
66
50
65
51
64
63
62
52
61
53
60
54
59
55
58
57
56

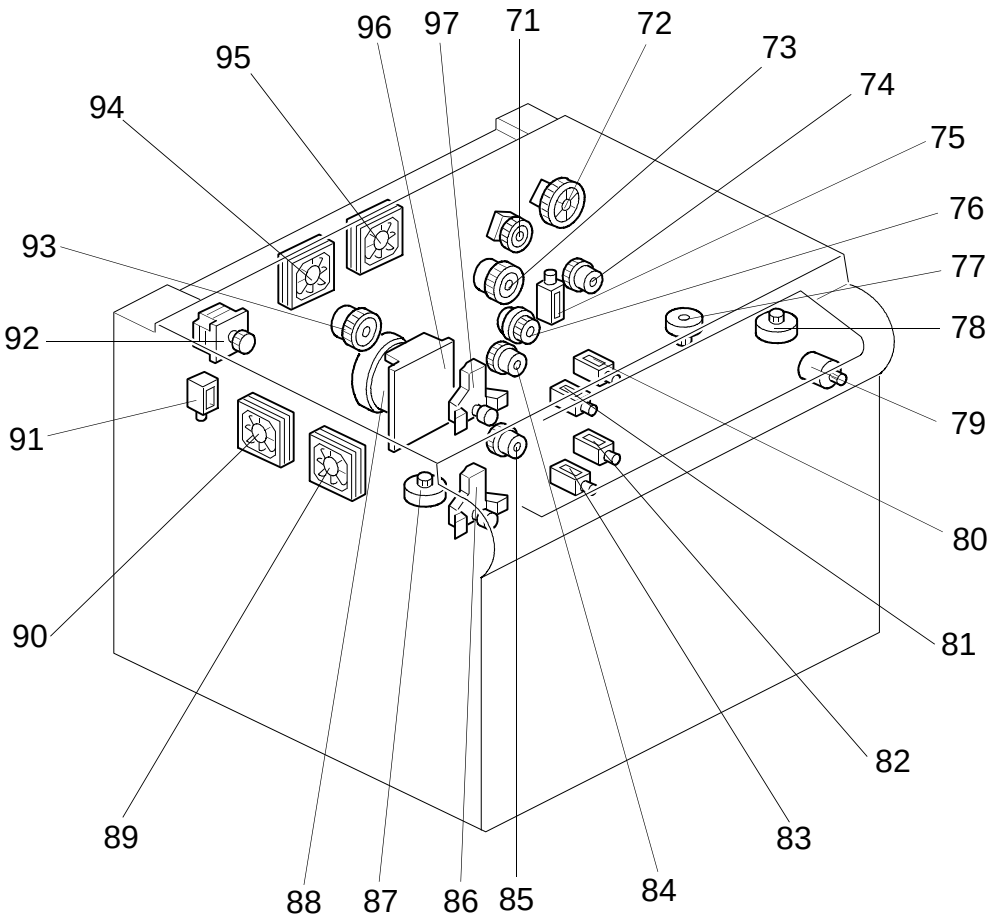
96
97
71
72
95
73
74
94
75
76
93
77
92
78
91
79
80
90
81
82
89
83
88
87
86
85
84

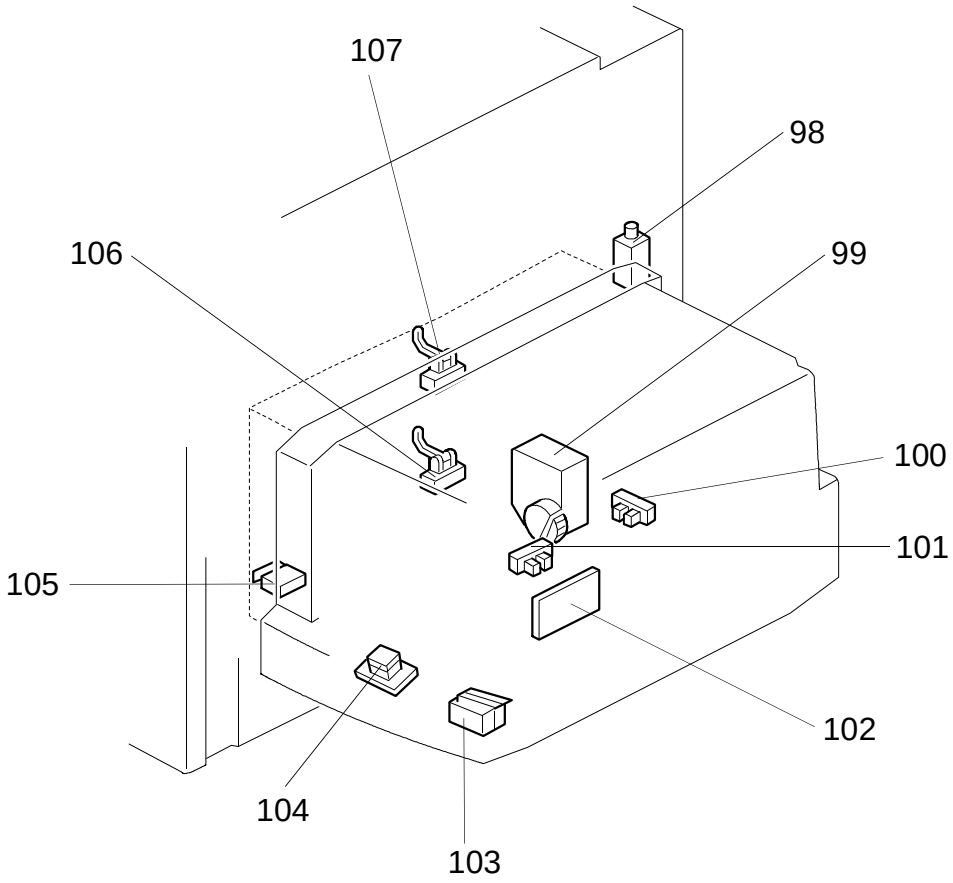
107
98
106
99
100
101
105
102
104
103

Description	Index No.	**P to P Location**
CB High Voltage Supply Board (PCB5)	1	A2
Erase Lamp (L6)	2	H2
Operation Panel Board (PCB7)	3	F2
Pre-transfer Lamp (L4)	4	D13
Quenching Lamp (L5)	5	D14
Liquid Crystal Display Board (A156 machines only) (PCB10)	6	E2
Transformer (220 ~ 240V machines only) (TR1)	7	C3
Nose Filter Board (220 ~ 240V machines only) (PCB8)	8	A2
Circuit Breaker (220 ~ 240V machines only) (CB1)	9	A2
Choke Coil (CC1)	10	B9
DC Power Supply Board (PCB3)	11	C9
AC Drive Board (PCB2)	12	C6
Auto Image Density Sensor (ADS Sensor) (S25)	13	D8
Main Control Board (PCB1)	14	F13
Scanner HP Sensor (S17)	15	G10
Platen Cover Sensor (S21)	16	D13
Exposure Lamp (L1)	17	A6
Exposure Lamp Thermofuse (TF3)	18	A6
Original Length Sensor-1 (S27)	19	D7
Lens Vertical HP Sensor (S16)	20	G10
Original Length Sensor-2 (S19)	21	D14
Original Length Sensor (Option for N. American models (S33)	22	D11
Transfer Belt Contact HP Sensor (S24)	23	D12
3rd Scanner HP Sensor (S18)	24	F9
Upper Tray Paper Size Switch (Non-duplex machines only) (SW5)	25	G16
LCT Upper Limit Sensor (LCT machines only) (S11)	26	J13
By-pass Feed Paper Width Sensor (S1)	27	J16
Registration Sensor (S12)	28	H10

Description	Index No.	**P to P Location**
Upper Tray Upper Limit Sensor (A153/A155 machines only) (S5)	29	I16
Lower Tray Upper Limit Sensor (A153/A155/A156 machines only) (S8)	30	J16
By-pass Feed Paper End Sensor (S2)	31	H10
Vertical Guide Set Switch (Non-LCT machines only) (SW7)	32	J16
By-pass Feed Table Switch (SW1)	33	I10
Lower Tray Paper Size Switch (SW6)	34	H16
Lower Tray Switch (SW3)	35	G11
Upper Tray Switch (Non-duplex machines only) (SW2)	36	G11
Lower Tray Heater (option) (H3)	37	A5
Drum Heater (H1)	38	A4
Lens Horizontal HP Sensor (S15)	39	G10
Total Counter (CO1)	40	D11
Front Cover Safety Switch (SW11)	41	C10
Main Switch (SW10)	42	B8
Auto Response Sensor (S23)	43	F1
Original Width Sensor (S26)	44	D8
Fusing Exit Sensor (S20)	45	D14
Optics Anti-condensation Heater (option) (H2)	46	A5
Optics Thermistor (TH3)	47	D4

Description	Index No.	P to P Location
Exit Cover Safety Switch (A157/A159/A160 machines only) (SW12)	48	D10
Drum Charge Thermistor (TH4)	49	I2
Image Density Sensor (ID) (S13)	50	I3
Upper Tray Paper End Sensor (Non-duplex machines only) (S3)	51	H16
Lower Tray Paper End Sensor (S6)	52	I16
Toner Density Sensor (TD) (S14)	53	I3
Toner End Sensor (S22)	54	D13
T High Voltage Supply Board (PCB6)	55	B12
Duplex Paper End Sensor (Duplex machines only) (S28)	56	K5
Duplex Turn Sensor (Duplex machines only) (S29)	57	K5
Duplex Feed Motor (Duplex machines only) (M14)	58	J8
Side Fence Jogger HP Sensor (Duplex machines only) (S31)	59	K6
Side Fence Jogger Motor (Duplex machines only) (M16)	60	K5
End Fence Jogger Motor (Duplex machines only) (M15)	61	K4
Duplex Entrance Sensor (Duplex machines only) (S30)	62	K6
Duplex Control Board (Duplex machines only) (PCB9)	63	J5
End Fence Jogger HP Sensor (Duplex machines only) (S32)	64	K6
Main Fusing Lamp (L2)	65	A7
Secondary Fusing Lamp (L3)	66	A8
Secondary Fusing Thermofuse (TF2)	67	B7
Main Fusing Thermofuse (TF1)	68	A7
Main Fusing Thermistor (TH1)	69	D12
Secondary Fusing Thermistor (TH2)	70	C12
Development Clutch (CL2)	71	D6
Toner Supply Clutch (CL1)	72	D5
Registration Clutch (CL4)	73	I10
By-pass Feed Clutch (CL5)	74	I10

Description	Index No.	P to P Location
LCT machines: LCT/By-Pass Pick up Solenoid Non-LCT machines: By-Pass Pick up Solenoid (SOL1)	75	I10
Relay Clutch (CL6)	76	K16
Lens Horizontal Drive Motor (M13)	77	G9
3rd Scanner Drive Motor (M11)	78	G8
Toner Bottle Drive Motor (M2)	79	D6
Upper Tray Pick-up Solenoid (A153/A155 machines only) (SOL4)	80	E16
Upper Tray Separation Solenoid (A153/A155 machines only) (SOL6)	81	F16
Lower Tray Pick-up Solenoid (A153/A155/A156 machines only) (SOL5)	82	F16
Lower Tray Separation Solenoid (A153/A155/A156 machines only) (SOL7)	83	F16
Upper- Paper Feed Clutch (Non-duplex machines only) (CL7)	84	E16
Lower Paper Feed Clutch (CL8)	85	E16
Lower Tray Lift Motor (A153/A155/A156 machines only) (M4)	86	G16
Lens Vertical Drive Motor (M12)	87	G8
Main Motor (M1)	88	D10
Exhaust Fan Motor 1 (M8)	89	D5
Exhaust Fan Motor 2 (A153/A155/A156 machines only) (M9)	90	D5
Junction Gate Solenoid (Duplex machines only) (SOL2)	91	G7
Scanner Drive Motor (M10)	92	F7
Transfer Belt Contact Clutch (CL3)	93	D11
Optics Cooling Fan Motor 1 (M6)	94	D4
Optics Cooling Fan Motor 2 (A153/A155/A156 machines only) (M7)	95	D5
Main Motor Control Board (PCB4)	96	D9
Upper Tray Lift Motor (A153/A155 machines only) (M3)	97	F16

Description	Index No.	P to P Location
LCT Pick-up Solenoid (LCT machines only) (SOL3)	98	J14
LCT Lift Motor (LCT machines only) (M5)	99	L11
LCT Lower Limit Sensor (LCT machines only) (S9)	100	J12
LCT Paper End Sensor (LCT machines only) (S10)	101	J13
LCT Interface Board (LCT machines only) (PCB11)	102	K12
LCT Cover Switch-2 (LCT machines only) (SW9)	103	K12
Tray Down Switch (LCT machines only) (SW4)	104	J13
LCT Cover Switch-1 (LCT machines only) (SW8)	105	J12
Lower Relay Sensor (S7)	106	I16
Upper Relay Sensor (S4)	107	H16

20 BIN SORTER (A556) ELECTRICAL COMPONENT LAYOUT

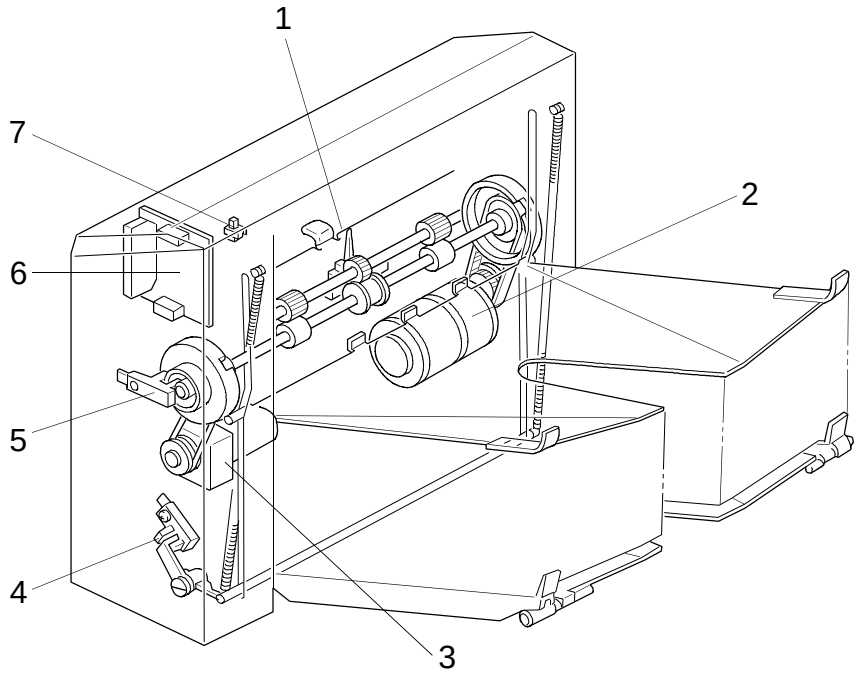

Description	Index No.	P to P Location
Paper Sensor (S1)	1	G15
Wheel Drive Motor (M1)	2	C15
Roller Drive Motor (M2)	3	E15
Bin Home Position Sensor (S2)	4	I15
Wheel Sensor (S3)	5	H15
Sorter Control Board (PCB1)	6	F8
Cover Safety Switch (SW1)	7	J15

10 BIN SORTER (A557) ELECTRICAL COMPONENT LAYOUT

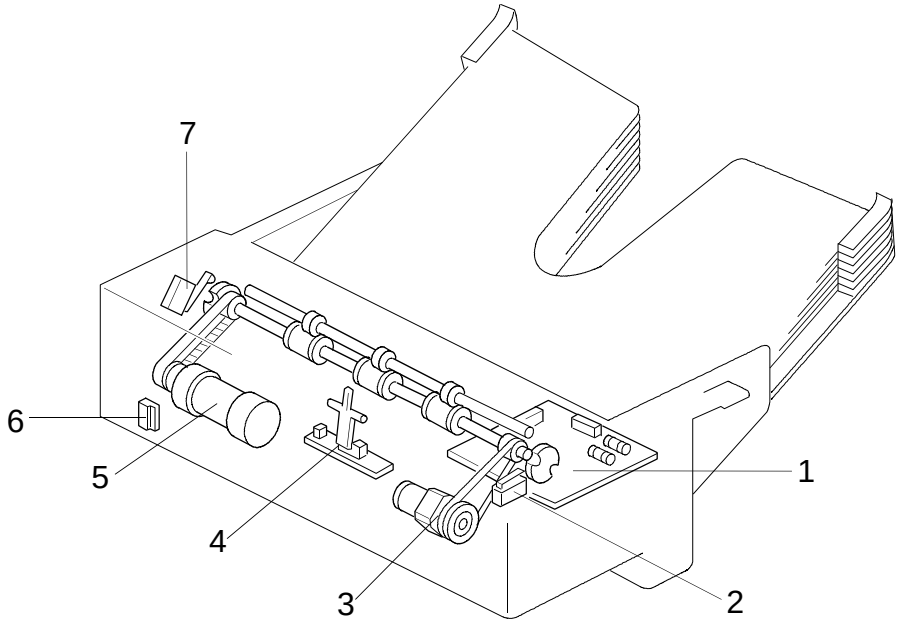

Description	Index No.	P to P Location
Sorter Main Board (PCB1)	1	F8
Wheel Switch (SW1)	2	H14
Roller Drive Motor (M1)	3	E14
Paper Sensor (S1)	4	J14
Bin Drive Motor (M2)	5	C14
Sorter Switch (SW2)	6	I14
Home Position Switch (SW3)	7	G14

ARDF (A548) ELECTRICAL COMPONENT LAYOUT

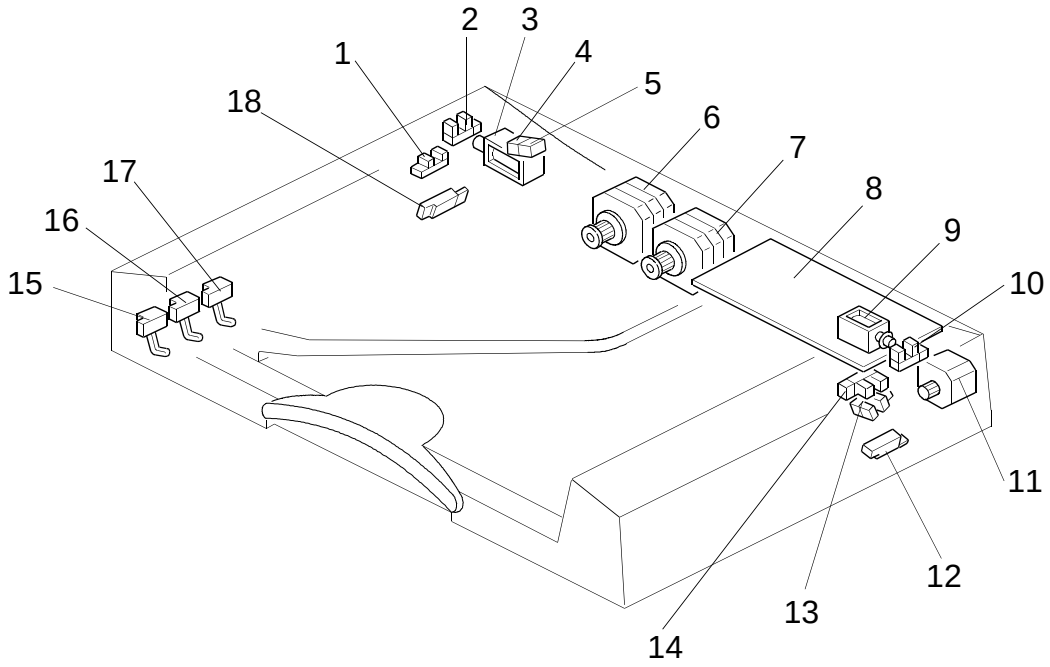

Description	Index No.	P to P Location
Original Set Sensor (S1)	1	B3
Feed-in Cover Open Sensor (S2)	2	E3
Stopper Solenoid (SOL1)	3	I16
Ready Lamp (L1)	4	D3
Auto Lamp (L2)	5	C3
Feed-in Motor (M1)	6	C16
Belt Drive Motor (M2)	7	E16
DF Main Board (PCB1)	8	F11
Inverter Solenoid (SOL2)	9	J16
Feed-out Cover Open Sensor (S3)	10	J3
Feed-out Motor (M3)	11	F16
Feed-out Sensor (S4)	12	I3
APS Start Sensor (S5)	13	L3
DF Position Sensor (S6)	14	K3
Original Width Sensor-1 (S7)	15	H3
Original Width Sensor-2 (S8)	16	G3
Original Width Sensor-3 (S9)	17	F3
Registration Sensor (S10)	18	A3

PAPER TRAY UNIT (A553) ELECTRICAL COMPONENT LAYOUT

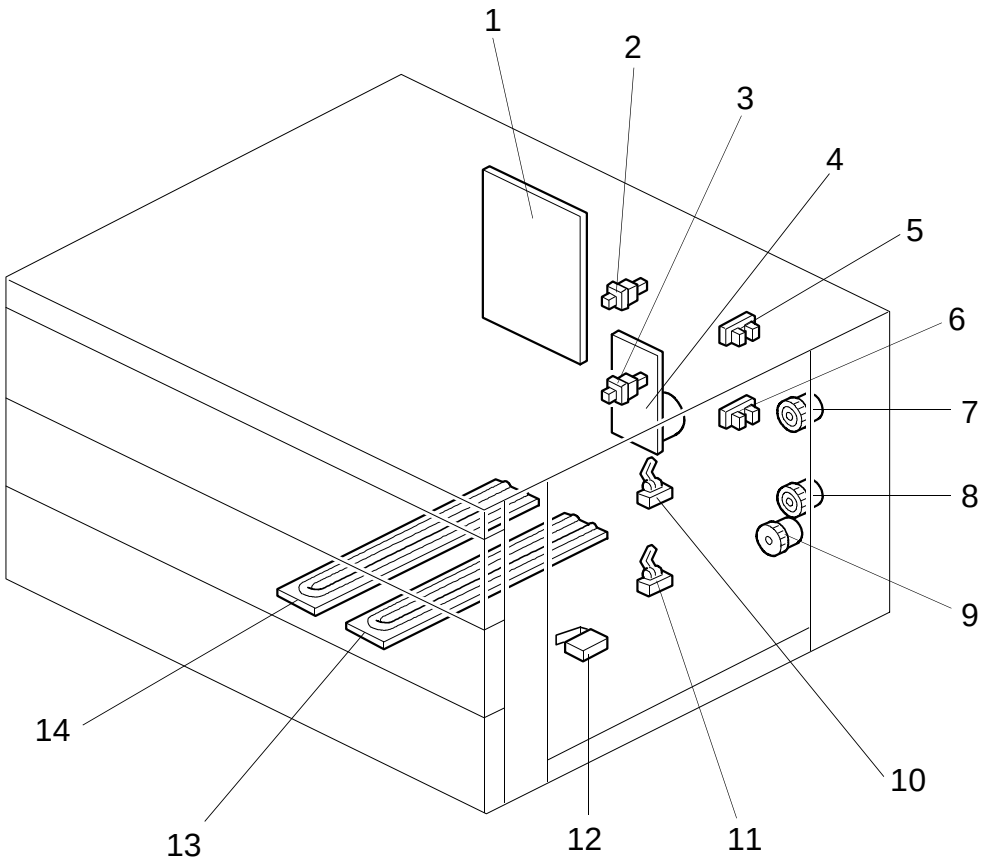

Description	Index No.	P to P Location
Interface Board (PCB1)	1	F8
Tray Set Switch 1 (SW2)	2	H2
Tray Set Switch 2 (SW3)	3	I2
Main Motor (M1)	4	G2
Paper End Sensor 1 (S3)	5	G16
Paper End Sensor 2 (S4)	6	G16
Paper Feed Clutch 1 (CL1)	7	I16
Paper Feed Clutch 2 (CL2)	8	I16
Relay Clutch (CL3)	9	H16
Relay Sensor 1 (S1)	10	B16
Relay Sensor 2 (S2)	11	C16
Tray Cover Switch (SW1)	12	B16
Tray Heater (Option) (H1)	13	C6
Tray Heater (Option) (H2)	14	D6

PAPER TRAY UNIT (A549/A550) ELECTRICAL COMPONENT LAYOUT

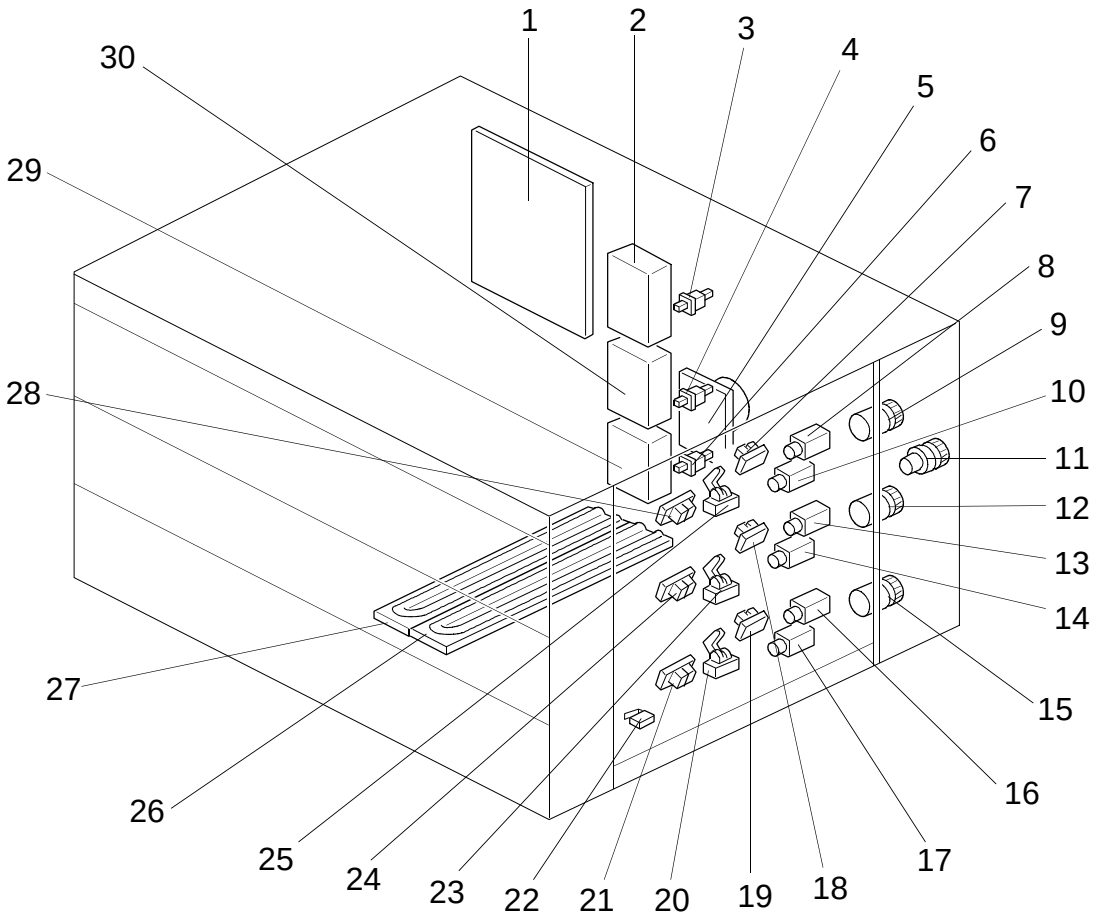

Description	Index No.	P to P Location
Interface Board (PCB1)	1	F8
Tray Lift Motor 1 (M2)	2	E2
Tray Set Switch 1 (SW2)	3	H2
Tray Set Switch 2 (SW3)	4	H2
Main Motor (M1)	5	F2
Tray Set Switch 3 (A549 only) (SW4)	6	I2
Tray Upper Limit Sensor 1 (S1)	7	E16
Paper Pick-up Solenoid 1 (SOL1)	8	D16
Paper Feed Clutch 1 (CL1)	9	K16
Separation Solenoid 1 (SOL4)	10	E16
Relay Clutch (CL4)	11	J16
Paper Feed Clutch 2 (CL2)	12	K16
Paper Pick-up Solenoid 2 (SOL2)	13	F16
Separation Solenoid 2 (SOL5)	14	G16
Paper Feed Clutch 3 (A549 only) (CL3)	15	L16
Paper Pick-up Solenoid 3 (A549 only) (SOL3)	16	I16
Separation Solenoid 3 (A549 only) (SOL6)	17	J16
Tray upper Limit Sensor 2 (S2)	18	G16
Tray upper Limit Sensor 3 (A549 only) (S3)	19	I16
Relay Sensor 3 (A549 only) (S6)	20	C16
Paper End Sensor 3 (A549 only) (S9)	21	H16
Tray Cover Switch (SW1)	22	A16
Relay Sensor 2 (S5)	23	B16
Paper End Sensor 2 (S8)	24	F16
Relay Sensor 1 (S4)	25	B16
Tray Heater (Option) (H1)	26	B6
Tray Heater (Option) (H2)	27	C6
Paper End Sensor 1 (S7)	28	C16
Tray Lift Motor 3 (A549 only) (M4)	29	F2
Tray Lift Motor 2 (M3)	30	E2

10 BIN SORTER STAPLER (A555) ELECTRICAL COMPNENT LAYOUT

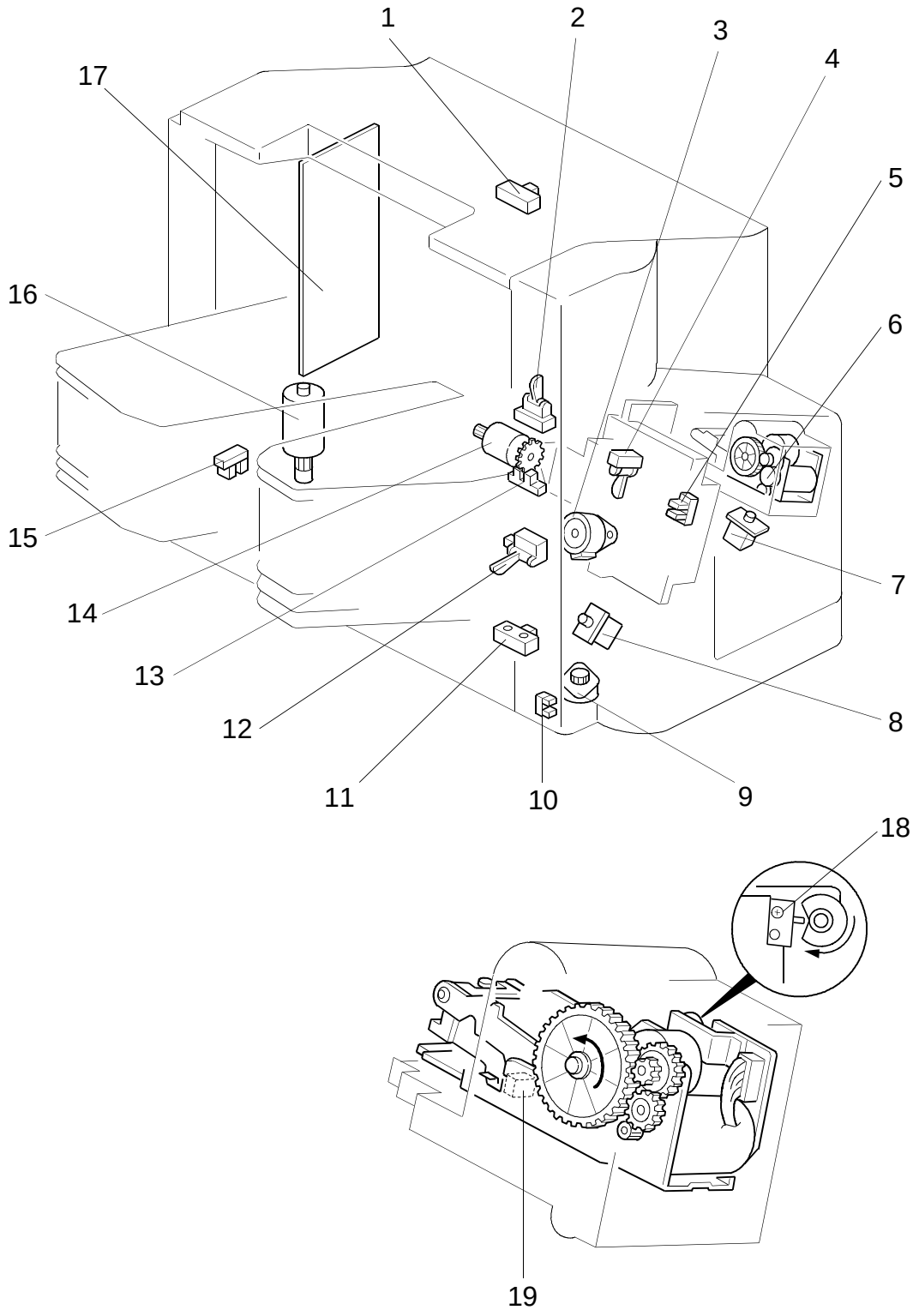

Description	Index No.	P to P Location
Bin Sensor (Photo tr.) (S1)	1	I15
Sorter Entrance Sensor (S2)	2	F15
Grip Motor (M5)	3	I2
Stapler Paper Sensor (S5)	4	A15
Grip H.P. Sensor (S6)	5	B15
Stapler Motor (M4)	6	E1
Stapler Switch (SW2)	7	F5
Door Safety Switch (SW1)	8	C5
Jogger Motor (M2)	9	H2
Wheel Sensor (S8)	10	C15
Bin Sensor (LED) (S7)	11	K15
Bin H.P. Sensor (S9)	12	H15
Timing Sensor (S4)	13	G15
Transport Motor (M1)	14	E16
Jogger H.P. Sensor (S3)	15	J15
Bin Drive Motor (M3)	16	K2
Main Board (PCB1)	17	F8
Staple H.P. Sensor (S10)	18	E1
Staple End Sensor (S11)	19	E1

20 BIN SORTER STAPLER (A554) ELECTRICAL COMPONENT LAYOUT

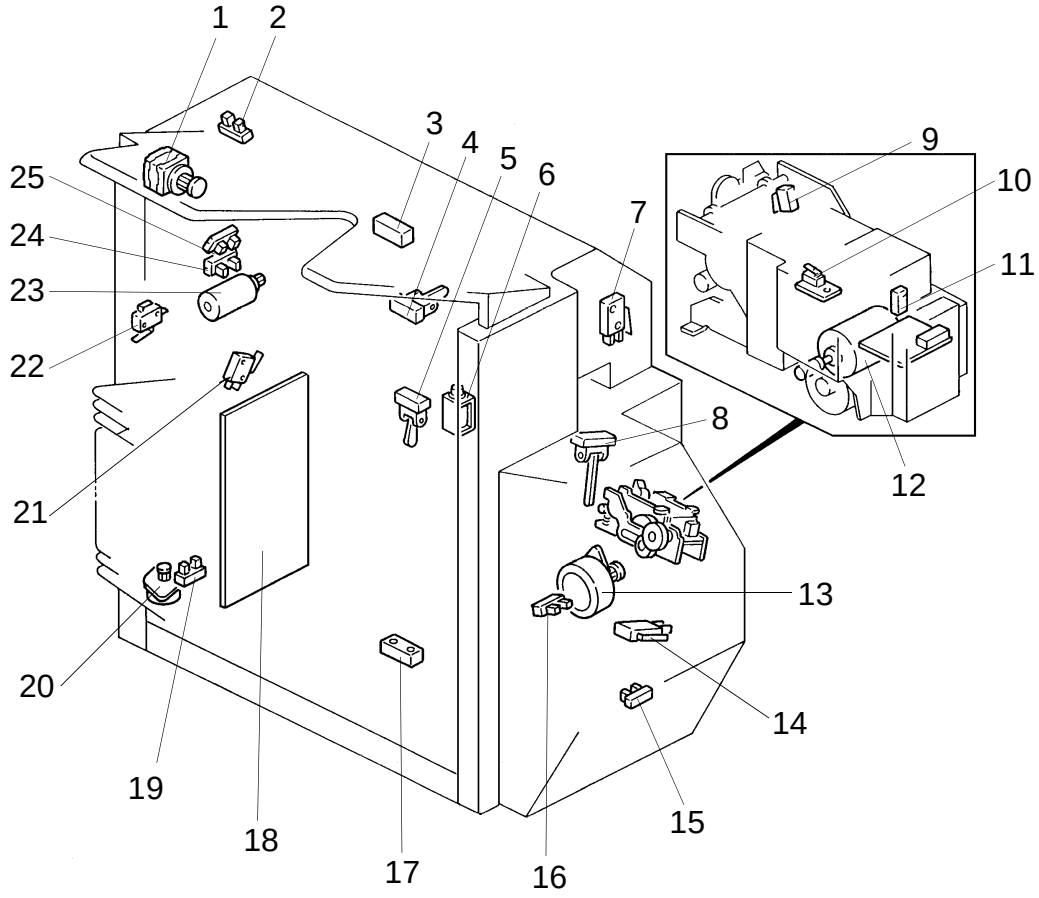

Description	Index No.	P to P Location
Roller Drive Motor (M5)	1	B2
Roller Drive Timing Sensor (S11)	2	C3
Bin Sensor (LED) (S5)	3	J16
Proof Tray Exit Sensor (S10)	4	D3
Bin Exit Sensor (S9)	5	D3
Turn Gate Solenoid (SOL1)	6	E3
Sorter Stapler Set Switch (SW4)	7	L4
Paper Sensor (S4)	8	I16
Staple Guide Switch (SW6)	9	G2
Staple End Switch (SW5)	10	G2
Staple H.P. Switch (SW7)	11	G2
Stapler Motor (M4)	12	F3
Grip Motor (M3)	13	I2
Front Door Switch (SW3)	14	L5
Bin H.P. Sensor (S8)	15	H3
Grip H.P. Sensor (S7)	16	J3
Bin Sensor (Photo tr.) (S6)	17	K16
Main Control Board (PCB1)	18	F9
Jogger H.P. Sensor (S3)	19	E16
Jogger Motor (M2)	20	G16
Wire Tension Switch (SW2)	21	B16
Upper Lift Limit Switch (SW1)	22	B16
Bin Lift Motor (M1)	23	A16
Bin Lift Timing -1 Sensor (S1)	24	C16
Bin Lift Timing -2 Sensor (S2)	25	D16