SFIX CHART

SFIX No.	COUNTRY	VOLTAGE	FREQUENCY (Hz)	PAPER SIZE	SFIX No.	COUNTRY	VOLTAGE	FREQUENCY (Hz)	PAPER SIZE
611	JAPAN	-	-	METRIC	614	EUROPE/THIRD AREA	-	-	METRIC
612	USA/CANADA	-	-	INCH					

CONTENTS

1. HOUSING ••••••

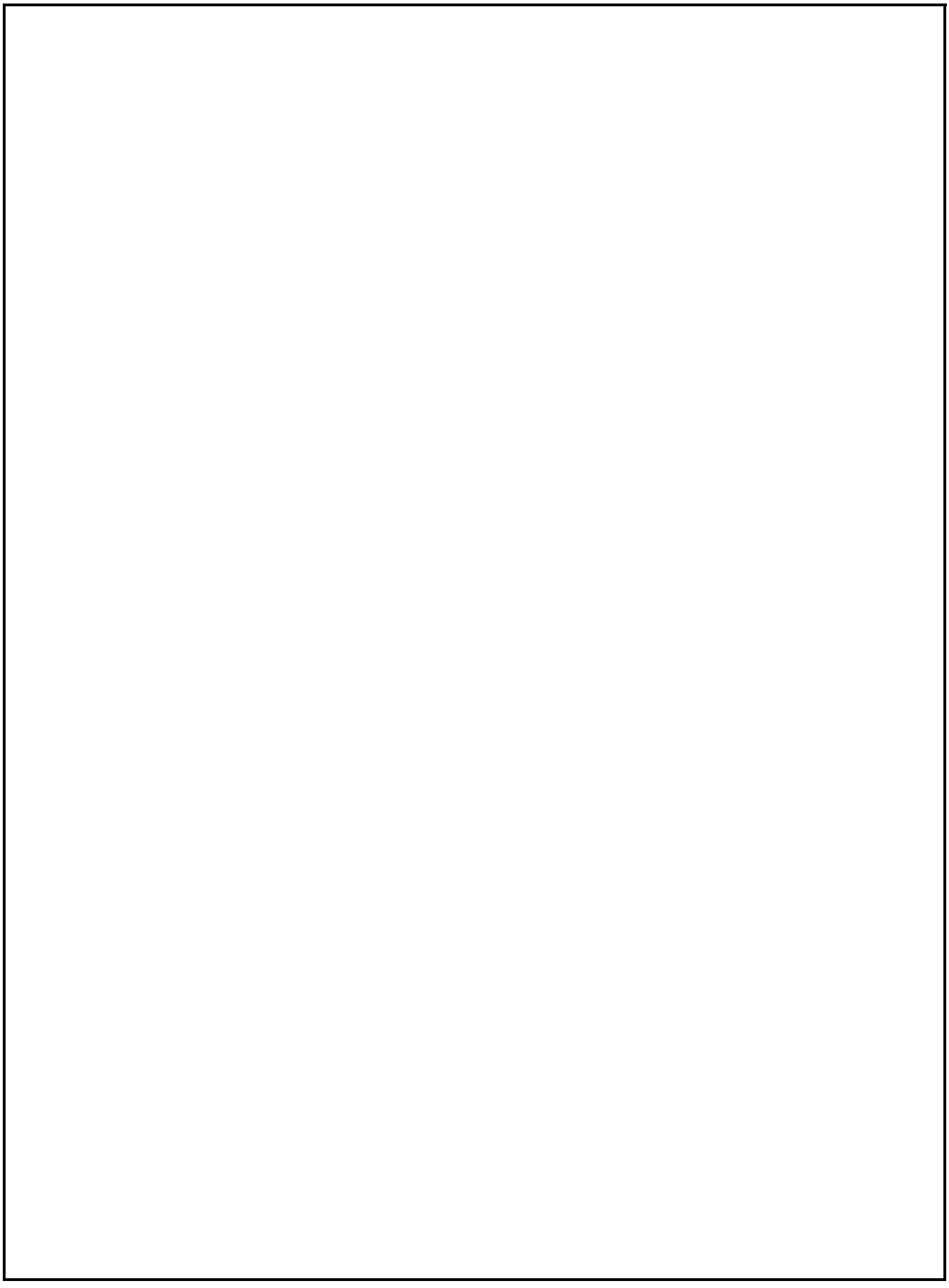

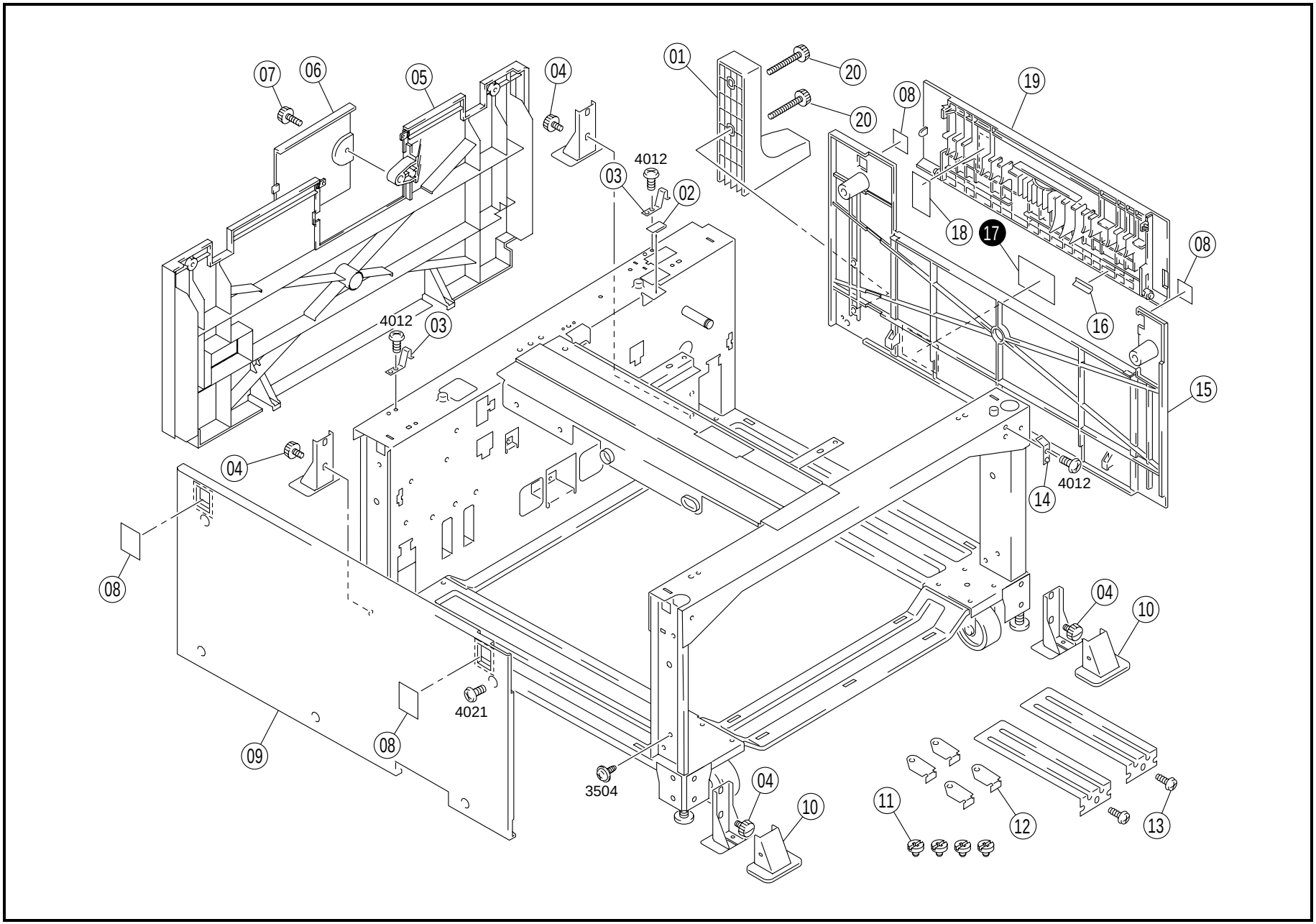
01
02
03
04
05
06
07
08
09
10
11
12
13
14
15
16
17
18
19
20
4012
4012
4012
4021
3504

INDEX	PART NO.	PART NAME	REC	QTY
01	4496-7505-01	STOPPER		1
02	4496-2027-01	SHEET		1
03	4659-2017-01	EARTH GROUND		2
04	4496-7501-01	SHOULDER SCREW		4
05	4659-1005-01	COVER		1
06	4659-1006-01	COVER		1
07	4659-1504-01	SHOULDER SCREW		1
08	4659-1009-01	SEAL		4
09	4496-1004-02	LEFT COVER		1
10	4496-7504-01	COVER		2
11	4659-3393-01	SCREW		4
12	4658-3140-02	STOP PLATE		4
13	4496-1502-01	SHOULDER SCREW		2
14	4659-2016-01	EARTH GROUND		1
15	4496-1003-02	RIGHT COVER		1
16	4496-3041-01	SHEET		1
18	4496-3040-01	SHEET		1
19	4496-3039-02	COVER		1

INDEX	PART NO.	PART NAME	REC	QTY
17	4496-7307-01	LABEL WARNING		1

INDEX	PART NO.	PART NAME	REC	QTY
20	4496-7502-01	SHOULDER SCREW		2

SFIX
612, 614

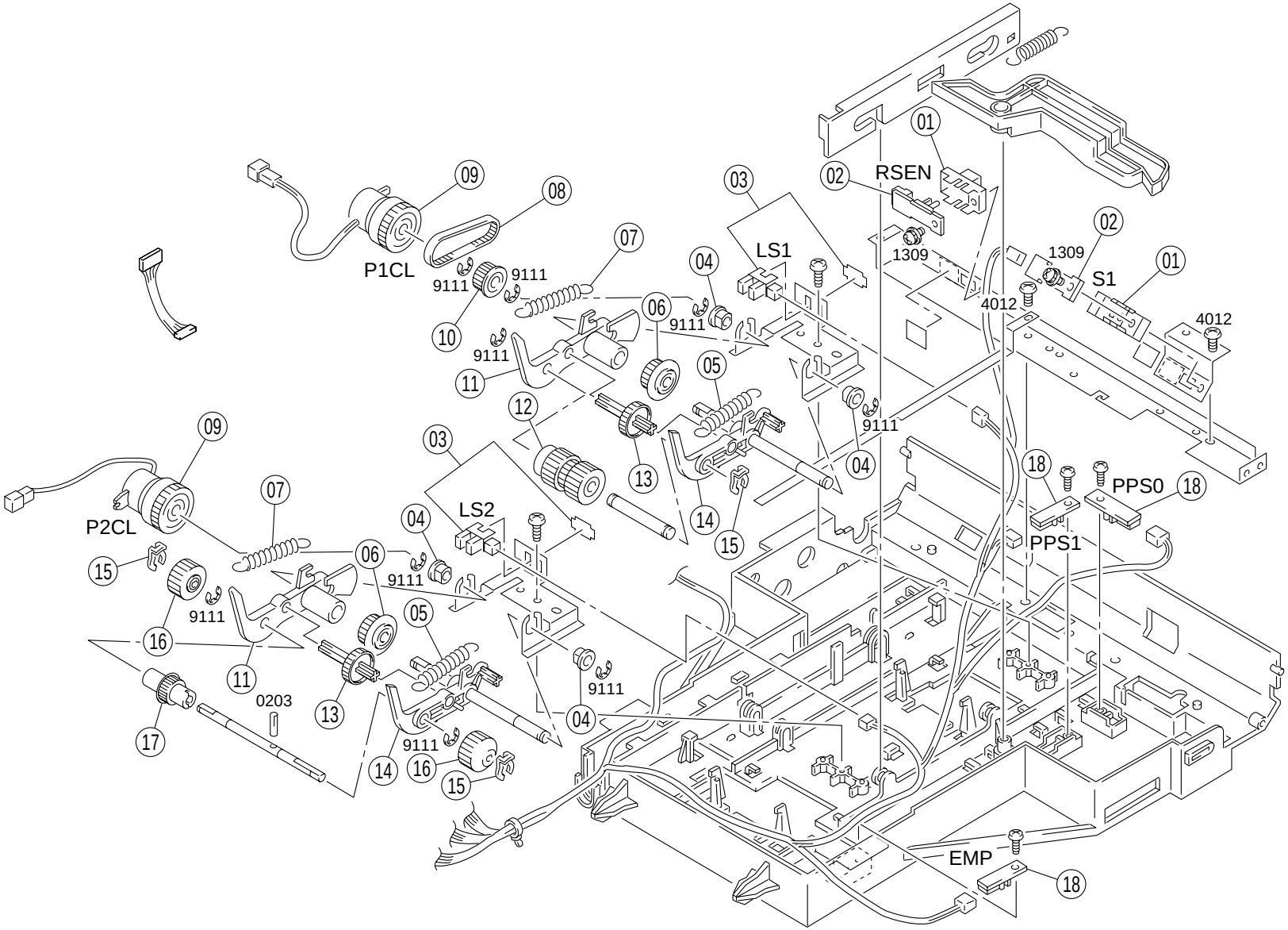
01
02
RSEN
03
LS1
1309
02
1309
S1
01
4012
4012
09
08
P1CL
9111
9111
07
04
06
9111
10
9111
11
05
12
9111
04
13
14
15
18
PPS0
18
PPS1
09
03
P2CL
07
LS2
04
06
9111
15
9111
16
11
05
0203
13
9111
04
17
9111
14
16
15
EMP
18

INDEX	PART NO.	PART NAME	REC	QTY	INDEX	PART NO.	PART NAME	REC	QTY
01	4496-3028-01	HOLDER		2					
02	4496-6003-01	PHOTO INTERRUPTER (RSEN.S1)		2					
03	4659-0901-01	PHOTO INTERRUPTER (LS1.2)		2					
04	4496-2538-01	BUSHING		4					
05	4496-3010-02	TENSION SPRING		2					
06	4496-3008-02	PULLEY 20T		2					
07	4496-3011-02	TENSION SPRING		2					
08	4496-3016-01	TIMING BELT		1					
09	4496-6201-01	CLUTCH (P1CL.P2CL)		1					
10	4496-3012-01	PULLEY 18T		1					
11	4496-3006-13	ARM		2					
12	4496-3001-02	ROLLER	RP	1					
13	4659-3044-01	GEAR		2					
14	4496-3005-13	ARM		2					
15	4496-3003-01	STOPPER RING		3					
16	4496-3046-01	ROLLER	RP	2					
17	4496-3048-01	GEAR		1					
18	4496-6002-02	PWB ASSY (EMP.PPS0.1)		3					

INDEX	PART NO.	PART NAME	REC	QTY	SFIX

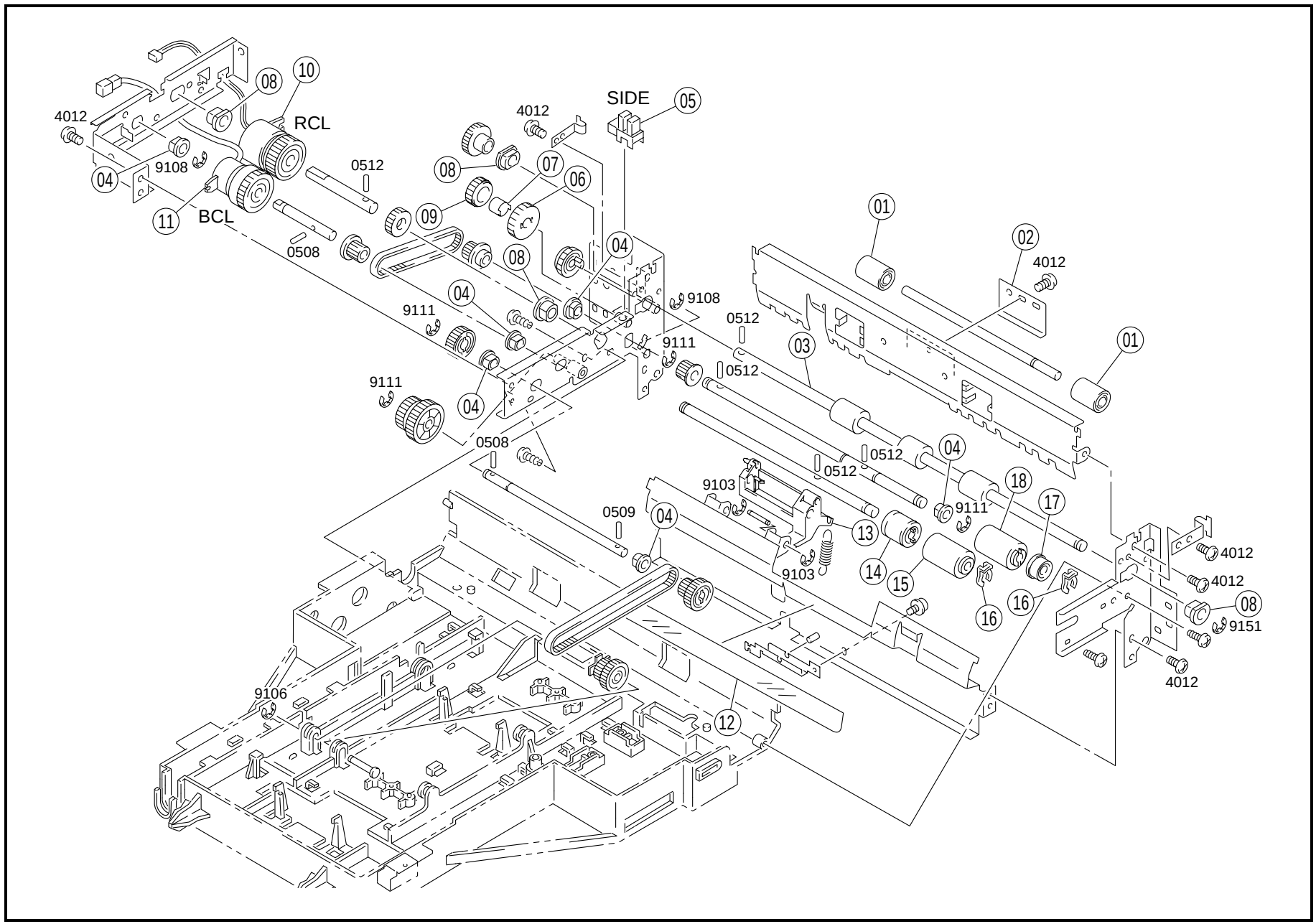
4012
08
10
RCL
04
9108
11
BCL
0512
0508
4012
SIDE
05
08
07
06
09
04
08
04
9111
9108
0512
9111
03
0512
01
02
4012
01
9111
04
0508
0512
04
0512
9103
18
17
9111
0509
04
13
14
15
9103
16
16
4012
4012
08
9151
4012
9106
12

INDEX	PART NO.	PART NAME	REC	QTY	INDEX	PART NO.	PART NAME	REC	QTY
01	4496-3036-01	ROLLER		2					
02	4496-3038-01	PLATE SPRING		1					
03	4659-3033-01	ROLLER		1					
04	4496-2538-01	BUSHING		6					
05	4496-6301-01	PHOTO INTERRUPTER DOORSET (SIDE)		1					
06	4659-2567-01	GEAR		1					
07	4659-2568-01	SLEEVE		1					
08	4496-2548-01	BUSH		4					
09	4659-2566-01	GEAR		1					
10	4496-6202-01	CLUTCH REGIST (RCL)		1					
11	4496-6203-01	CLUTCH SEPARAT (BCL)		1					
12	4659-3025-01	GUIDE		1					
13	4659-3026-01	LEVER		1					
14	4496-0152-01	ARBOR ASSY	RP	1					
15	4496-3045-01	ROLLER	RP	1					
16	4496-3003-01	STOPPER RING		2					
17	4496-3014-01	ARBOR		1					
18	4496-3013-02	ROLLER	RP	1					

INDEX	PART NO.	PART NAME	REC	QTY	SFIX

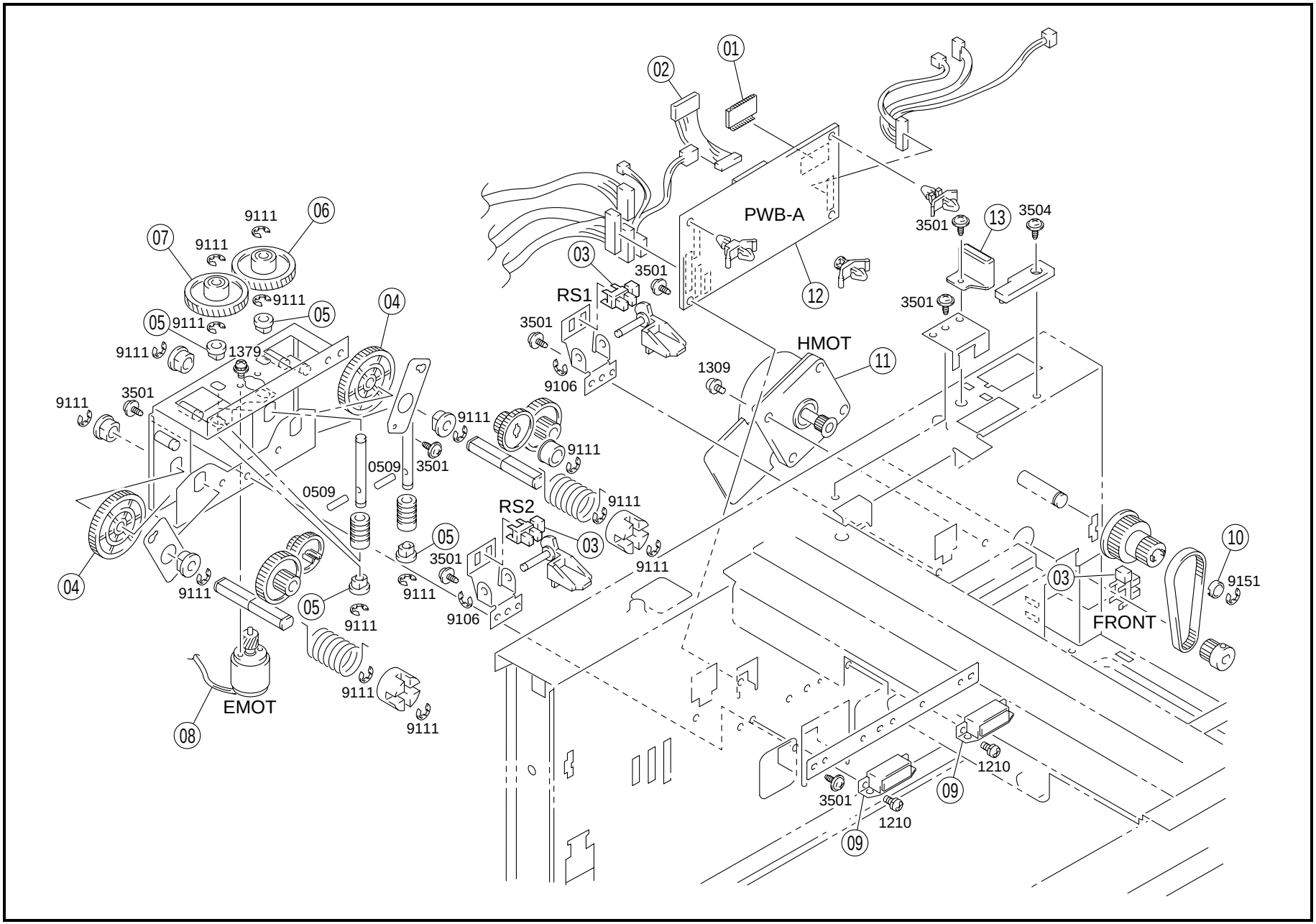
01
02
PWB-A
03
3501
RS1
3501
9106
12
3501
13
3504
3501
HMOT
11
1309
07
9111
06
9111
9111
05
9111
05
9111
1379
04
9111
3501
9111
9111
0509
3501
0509
RS2
03
9111
05
3501
9111
9106
04
9111
05
9111
9111
9111
08
EMOT
9111
10
9151
03
FRONT
1210
09
3501
1210
09

INDEX	PART NO.	PART NAME	REC	QTY	INDEX	PART NO.	PART NAME	REC	QTY
01	4659-6601-02	IC		1					
02	4659-6801-02	WIRE HARNESS ASSY		1					
03	4496-6301-01	PHOTO INTERRUPTER (FRONT.RS1.2)		3					
04	4496-2547-01	GEAR 58T		2					
05	4496-2538-01	BUSHING		4					
06	4496-2535-02	GEAR 72T		1					
07	4496-2534-02	GEAR 72T		1					
08	4496-6102-01	MOTOR LIFT-UP (EMOT)		1					
09	4496-2038-12	MAGNET		2					
10	4659-3401-02	PULLEY		1					
11	4659-6101-01	MOTOR TRANSPORT (HMOT)		1					
12	4659-6001-01	PWB ASSY CONTROL (PWB-A)	RP	1					
13	4659-2401-01	GUIDE		1					

INDEX	PART NO.	PART NAME	REC	QTY	SFIX

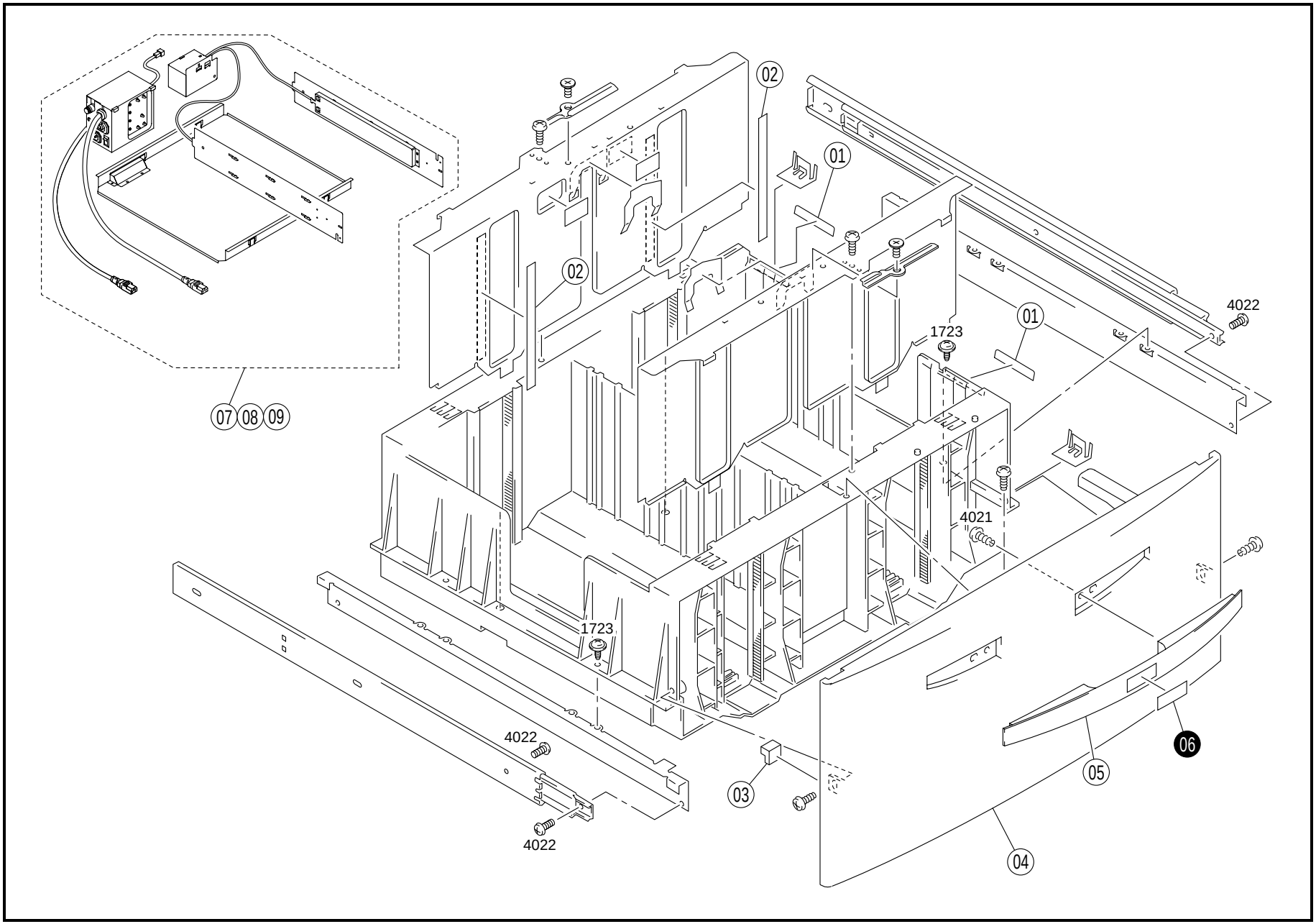
02
01
02
4022
01
1723
07
08
09
4021
1723
4022
03
06
05
4022
04

INDEX	PART NO.	PART NAME	REC	QTY	INDEX	PART NO.	PART NAME	REC	QTY
01	4496-2551-01	POLYESTER FILM		2					
02	4496-2563-01	GUIDE		2					
03	4496-1503-01	STOPPER		1					
04	4659-1001-01	COVER		1					
05	4659-1002-01	HANDLE		1					

INDEX	PART NO.	PART NAME	REC	QTY	SFIX
06	4496-7302-01	LABEL A4		1	611, 614
06	4496-7303-01	LABEL LETTER		1	612
07	4659-0121-02	HEATER ASSY OPTION (100V)		1	611
08	4659-0122-02	HEATER ASSY OPTION (120V)		1	612, 614
09	4659-0123-02	HEATER ASSY OPTION (230V)		1	612, 614

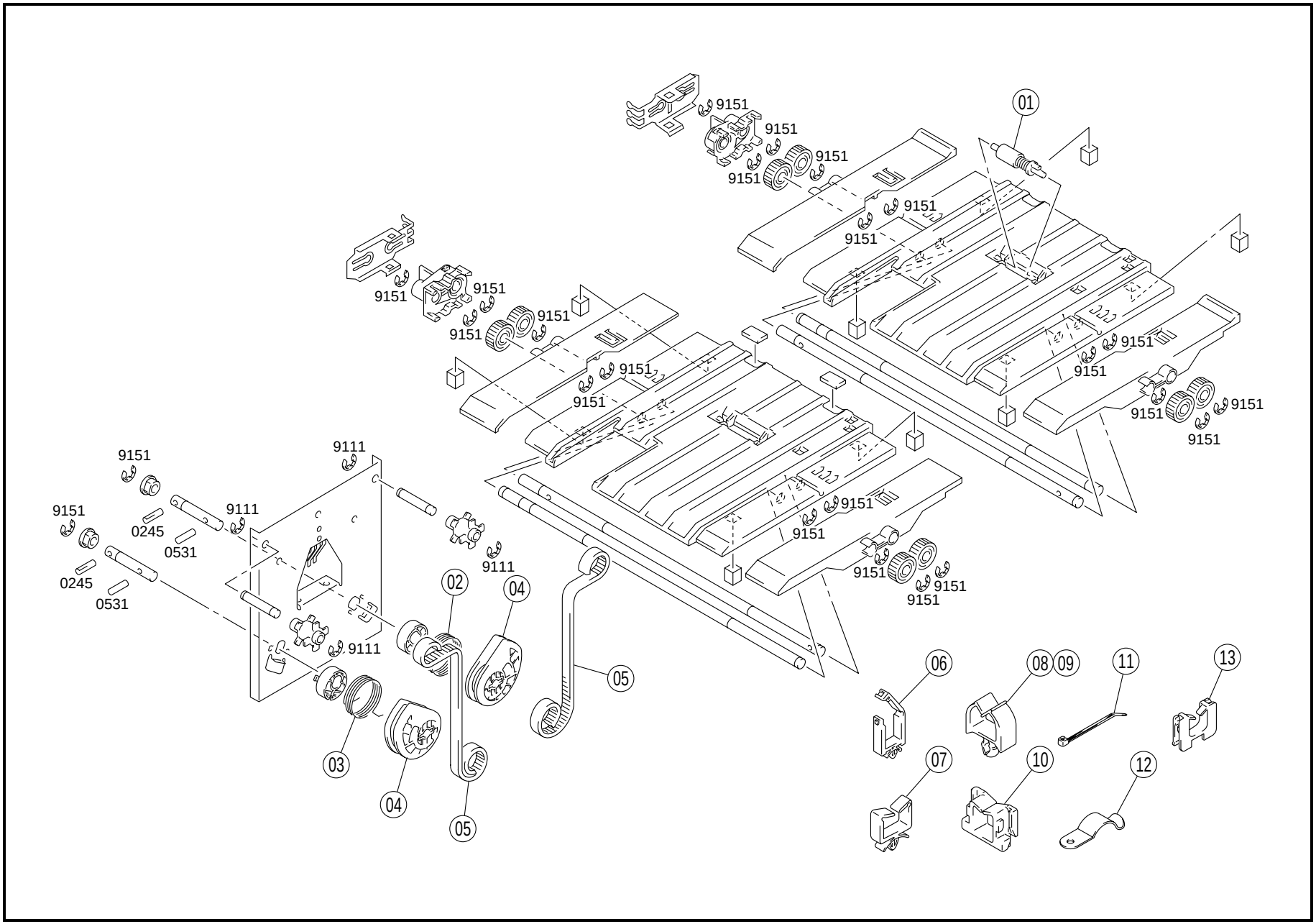
9151
01
9111
0245
0531
02
04
05
03
06
08
09
11
13
07
10
12

INDEX	PART NO.	PART NAME	REC	QTY	INDEX	PART NO.	PART NAME	REC	QTY
01	4496-0151-01	ROLL ASSY	RP	1					
02	4496-2524-01	TORSION SPRING		1					
03	4496-2523-01	TORSION SPRING		1					
04	4496-2525-01	PULLEY 32T		2					
05	4496-2526-01	TIMING BELT		2					
06	4496-6751-01	WIRING SADDLE		2					
07	4496-6752-01	WIRING SADDLE		6					
08	4433-6752-01	WIRING SADDLE		1					
09	4496-6753-01	CORD CLAMP		4					
10	4474-6753-01	EDGE COVER		2					
11	1227-6804-01	CABLE TIE		3					
12	4496-6754-01	CORD CLAMP		1					
13	4659-6753-01	EDGE COVER		2					

INDEX	PART NO.	PART NAME	REC	QTY	SFIX

INDEX	PART NO.	PART NAME	ILLUST
0203 0245	9754-2010-08 9754-3018-50	SPRING ROLL PIN	
0508 0509 0512 0531	9752-2010-50 9752-2012-50 9752-2008-50 9752-3018-50	PIN	
1210	9644-0308-13	SCREW	
1309	9646-0310-13	SCREW	
1723	9737-0308-13	SCREW	
3501 3504	9735-0306-13 9735-0308-13	TAPPING SCREW	
4012 4021 4022	9743-0306-13 9743-0308-14 9743-0406-13	TAPPING SCREW	
9103 9106 9108 9111 9151	9721-0200-16 9721-0300-16 9721-0400-16 9721-0500-16 9721-0700-16	RETAINING RING	

INDEX	PART NO.	PART NAME	ILLUST

INDEX	PART NO.	PART NAME	ILLUST

PART NO.	FIG.	INDEX	QTY		PART NO.	FIG.	INDEX	QTY		PART NO.	FIG.	INDEX	QTY		PART NO.	FIG.	INDEX	QTY	
1227-6804-01	06	11	3		4659-1002-01	05	05	1											
4433-6752-01	06	08	1		4659-1005-01	01	05	1											
4474-6753-01	06	10	2		4659-1006-01	01	06	1											
4496-0151-01	06	01	1		4659-1009-01	01	08	4											
4496-0152-01	03	14	1		4659-1504-01	01	07	1											
4496-1003-02	01	15	1		4659-2016-01	01	14	1											
4496-1004-02	01	09	1		4659-2017-01	01	03	2											
4496-1502-01	01	13	2		4659-2401-01	04	13	1											
4496-1503-01	05	03	1		4659-2566-01	03	09	1											
4496-2027-01	01	02	1		4659-2567-01	03	06	1											
4496-2038-12	04	09	2		4659-2568-01	03	07	1											
4496-2523-01	06	03	1		4659-3025-01	03	12	1											
4496-2524-01	06	02	1		4659-3026-01	03	13	1											
4496-2525-01	06	04	2		4659-3033-01	03	03	1											
4496-2526-01	06	05	2		4659-3044-01	02	13	2											
4496-2534-02	04	07	1		4659-3393-01	01	11	4											
4496-2535-02	04	06	1		4659-3401-02	04	10	1											
4496-2538-01	02	04	4		4659-6001-01	04	12	1											
4496-2538-01	03	04	6		4659-6101-01	04	11	1											
4496-2538-01	04	05	4		4659-6601-02	04	01	1											
4496-2547-01	04	04	2		4659-6753-01	06	13	2											
4496-2548-01	03	08	4		4659-6801-02	04	02	1											
4496-2551-01	05	01	2																
4496-2563-01	05	02	2																
4496-3001-02	02	12	1																
4496-3003-01	02	15	3																
4496-3003-01	03	16	2																
4496-3005-13	02	14	2																
4496-3006-13	02	11	2																
4496-3008-02	02	06	2																
4496-3010-02	02	05	2																
4496-3011-02	02	07	2																
4496-3012-01	02	10	1																
4496-3013-02	03	18	1																
4496-3014-01	03	17	1																
4496-3016-01	02	08	1																
4496-3028-01	02	01	2																
4496-3036-01	03	01	2																
4496-3038-01	03	02	1																
4496-3039-02	01	19	1																
4496-3040-01	01	18	1																
4496-3041-01	01	16	1																
4496-3045-01	03	15	1																
4496-3046-01	02	16	2																
4496-3048-01	02	17	1																
4496-6002-02	02	18	3																
4496-6003-01	02	02	2																
4496-6102-01	04	08	1																
4496-6201-01	02	09	1																
4496-6202-01	03	10	1																
4496-6203-01	03	11	1																
4496-6301-01	03	05	1																
4496-6301-01	04	03	3																
4496-6751-01	06	06	2																
4496-6752-01	06	07	6																
4496-6753-01	06	09	4																
4496-6754-01	06	12	1																
4496-7302-01	05	06	1																
4496-7303-01	05	06	1																
4496-7307-01	01	17	1																
4496-7501-01	01	04	4																
4496-7502-01	01	20	2																
4496-7504-01	01	10	2																
4496-7505-01	01	01	1																
4658-3140-02	01	12	4																
4659-0121-02	05	07	1																
4659-0122-02	05	08	1																
4659-0123-02	05	09	1																
4659-0901-01	02	03	2																
4659-1001-01	05	04	1																