PF-117

SERVICE MANUAL

10794

CONTENTS

GENERAL, MECHANICAL/ELECTRICAL

1. SPECIFICATIONS M-1
2. PARTS IDENTIFICATION M-1
3. CROSS-SECTIONAL VIEW M-2
4. DRIVE SYSTEM M-2
5. ELECTRICAL COMPONENTS LAYOUT M-3
6. MECHANISM AND CONTROL M-4
   - 6-1. Vertical Transport Drive Mechanism M-4
   - 6-2. Paper Take-Up Mechanism M-4
   - 6-3. Paper Take-Up Mechanism M-5
   - 6-4. Paper Take-Up Operations M-6
     - (1) Lift 1 Paper Take-Up Operations M-6
     - (2) Lift 2 Paper Take-Up Operations M-8
   - 6-5. Paper Separating Mechanism M-11
   - 6-6. Paper Pressure Releasing Mechanism M-11
   - 6-7. Paper Take-Up Roll Retracting Mechanism M-12
   - 6-8. LCC-in-Position Detection M-12
   - 6-9. Edge Guides and Trailing Edge Stop M-13
   - 6-10. Paper Size Setting M-13
   - 6-11. Lifting Mechanism M-14
     - (1) Lift 1 and 2 Ascent Conditions M-15
     - (2) Lift 1 and 2 Stop Conditions M-15
     - (3) LCC Lift-Up Motor EMOT Control M-15
     - (4) Descent Motion M-16
   - 6-12. Paper Near Empty Detection M-16
   - 6-13. Paper Empty Detection M-17
   - 6-14. Panel Display M-17
   - 6-15. Paper Dehumidifying Heaters (Option) M-18

DIS/REASSEMBLY, ADJUSTMENT

1. DISASSEMBLY D-1
   - 1-1. Maintenance Schedule D-1
   - 1-2. Removal of Exterior Parts D-2
   - 1-3. Removal of the Paper Take-Up Unit D-3
   - 1-4. Removal of the Paper Take-Up Rolls D-4
   - 1-5. Removal of the Feed Roll, Separator Roll and Torque Limiter Assy D-6
   - 1-6. Cleaning of the Paper Take-Up Roll D-6
   - 1-7. Cleaning of the Feed Roll and Separator Roll D-6
   - 1-8. Cleaning of the Vertical Transport Roller/Rolls D-7
   - 1-9. Cleaning of the Roll with a Torque Limiter D-7
2. ADJUSTMENT D-8
   - 2-1. Reference Position Adjustment D-8

MISFEED/MALFUNCTION DETECTION

1. MISFEED DETECTION T-1
   - 1-1. Location of Misfeed Detecting Sensors T-1

1-2. Misfeed Detection Timing T-2
2. MALFUNCTION DETECTION T-2

GENERAL, MECHANICAL/ELECTRICAL

1. SPECIFICATIONS

Type	:	Front Loading Type LCC
Type of Paper	:	Plain paper
Paper Size	:	B5C, A4C, Letter C
Paper Weight	:	64 to 90 g/m^2 or 17 to 24 lbs.
Registration	:	Center
Paper Capacity	:	2,500 sheets (1250 × 2)
Power Requirements	:	DC24 V ± 10 %, DC5.1 V ± 5 % (supplied from copier)
Dimensions	:	Width ... 535 mm or 21 in Depth ... 568 mm or 22-1/4 in Height ... 284 mm or 11-1/4 in
Weight	:	17 kg or 37-1/2 lbs.

2. PARTS IDENTIFICATION

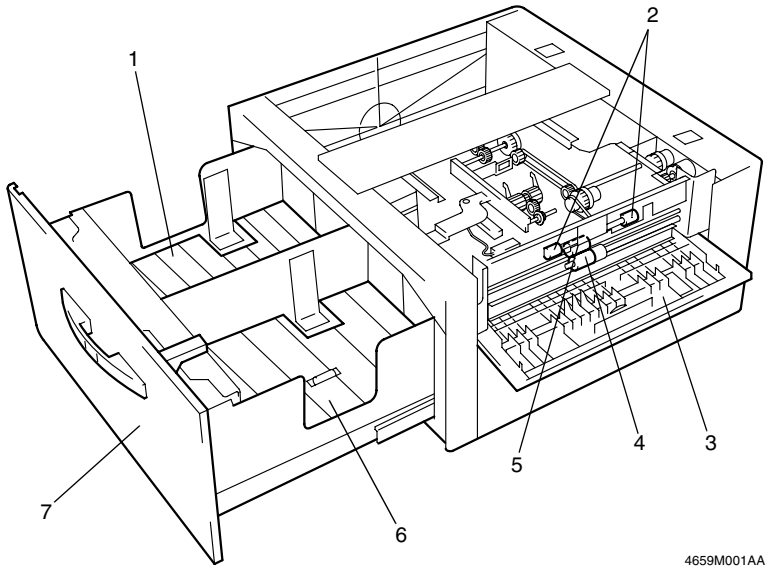

1. Lift 2
2. Vertical Transport Rolls
3. Right Side Door
4. Separator Roll
5. Feed Roll
6. Lift 1
7. Front Cover

3. CROSS-SECTIONAL VIEW

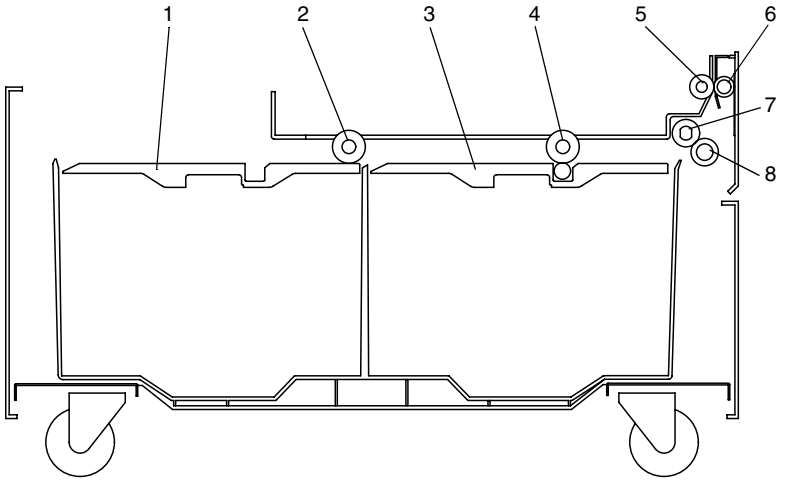

1. Lift 2
2. Paper Take-Up Roll 2
3. Lift 1
4. Paper Take-Up Roll 1
5. Vertical Transport Roller
6. Vertical Transport Roll
7. Feed Roll
8. Separator Roll

4. DRIVE SYSTEM

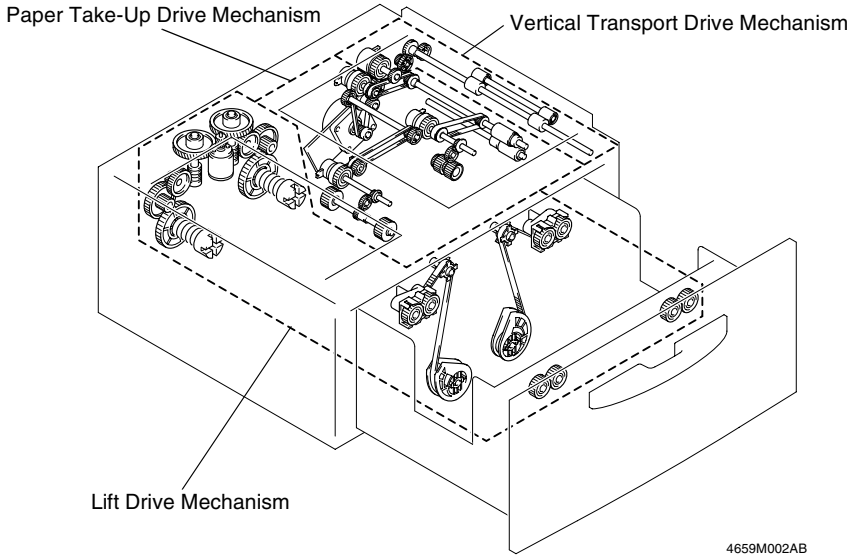

5. ELECTRICAL COMPONENTS LAYOUT

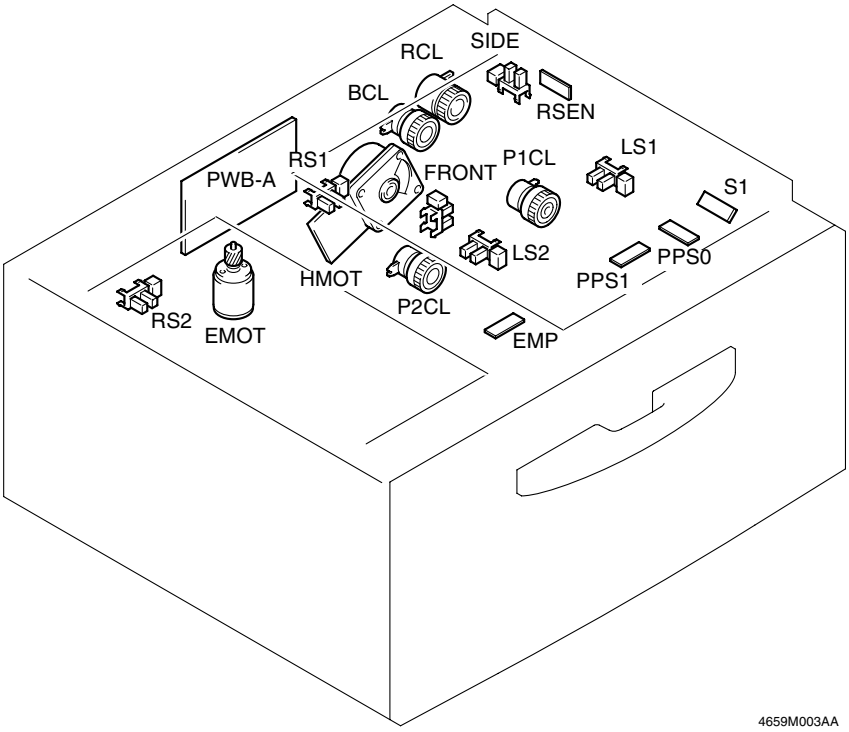

4659M003AA

Symbol	Name	Symbol	Name
PWB-A	LCC Control Board	S1	Paper Standby Position Sensor
HMOT	LCC Transport Motor	RSEN	Registration Sensor
EMOT	LCC Lift-Up Motor	EMP	Paper Empty Sensor 2
P1CL	Paper Take-Up Clutch 1	SIDE	Side Cover Set Sensor
P2CL	Paper Take-Up Clutch 2	FRONT	LCC Set Sensor
BCL	Separator Clutch	RS1	Paper Near Empty Sensor 1
RCL	Registration Clutch	RS2	Paper Near Empty Sensor 2
PPS0	LCC Paper Take-Up Sensor	LS1	Lift-Up Sensor 1
PPS1	Paper Empty Sensor 1	LS2	Lift-Up Sensor 2

6. MECHANISM AND CONTROL

6-1. Vertical Transport Drive Mechanism

- The LCC Transport Motor provides the drive for the Vertical Transport Roller.

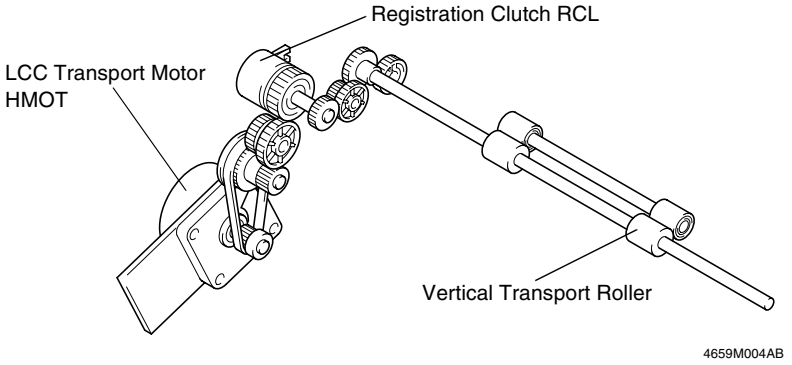

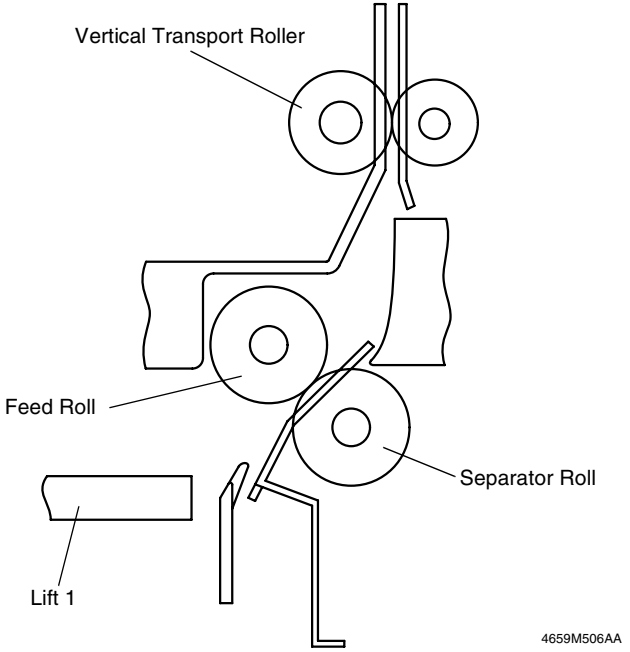

6-2. Paper Take-Up Mechanism

- The LCC Transport Motor is energized and deenergized by the signals output from pins 1 to 6 of CN6A on the LCC Control Board.

6-3. Paper Take-Up Mechanism

- Paper take-up drive is provided by the LCC Transport Motor.

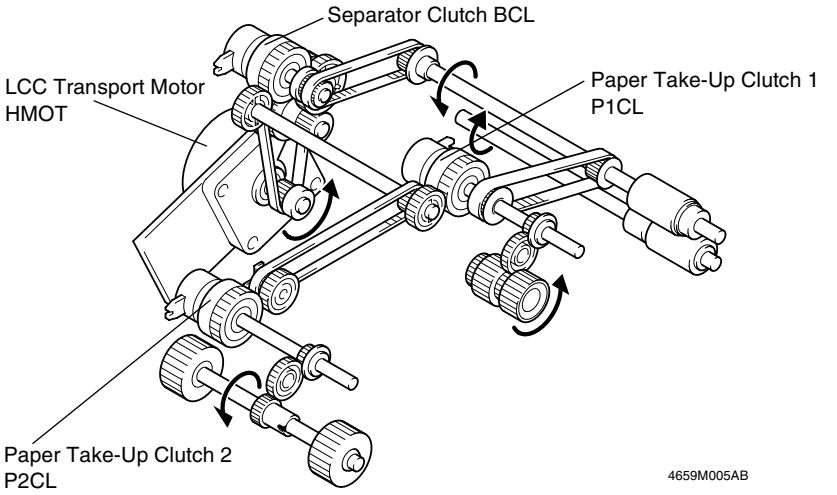

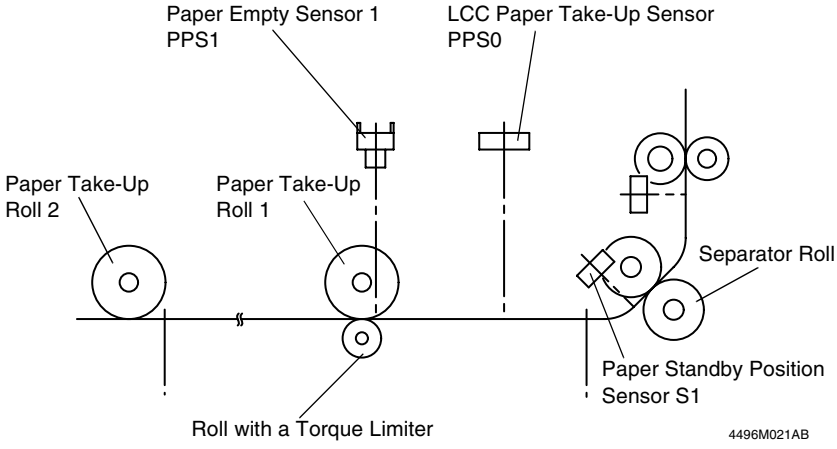

6-4. Paper Take-Up Operations

(1) Lift 1 Paper Take-Up Operations

Operation 1

- After Lift 1 has completed its ascent motion, Paper Take-Up Roll 1 is driven.
- Paper is transported until its leading edge activates the Paper Standby Position Sensor (this position serves as the standby position for paper take-up).

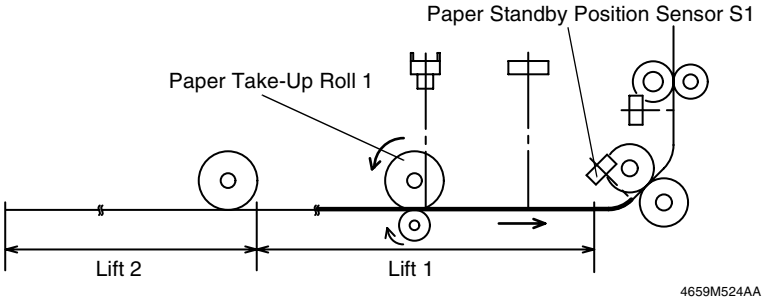

Operation 2

- A Paper Take-Up signal is sent from the copier.
- The Separator and Feed Rolls, and Paper Take-Up Roll 1 work together to transport the paper to the Registration Sensor.
- When the Registration Sensor is activated, the paper is further transported over the distance between the Registration Sensor and Vertical Transport Roller, plus a registration loop length.
- Paper Take-Up Roll 1 is stopped.

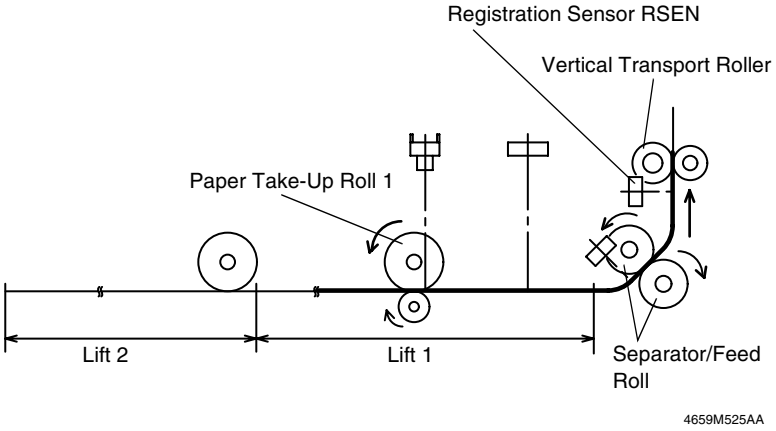

Operation 3

- The Vertical Transport Roller is driven to feed the paper toward the copier.
- When the trailing edge of the paper deactivates the Paper Standby Position Sensor, the subsequent paper is transported up to the standby position.
- Separator and Feed Rolls are brought to a stop after the lapse of a given period of time after the Registration Sensor has been deactivated by the trailing edge of the paper being taken up and fed in.
- The next Paper Take-Up signal is issued after the lapse of a given period time after the Vertical Transport Roller has started turning for the transport of the preceding sheet of paper.

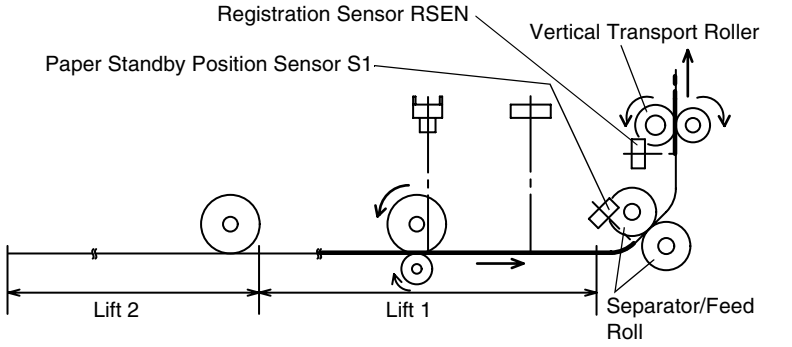

✻ These operations 1 to 3 are repeated to transport paper from Lift 1.

Taking up and feeding two sheets of paper from Lift 1

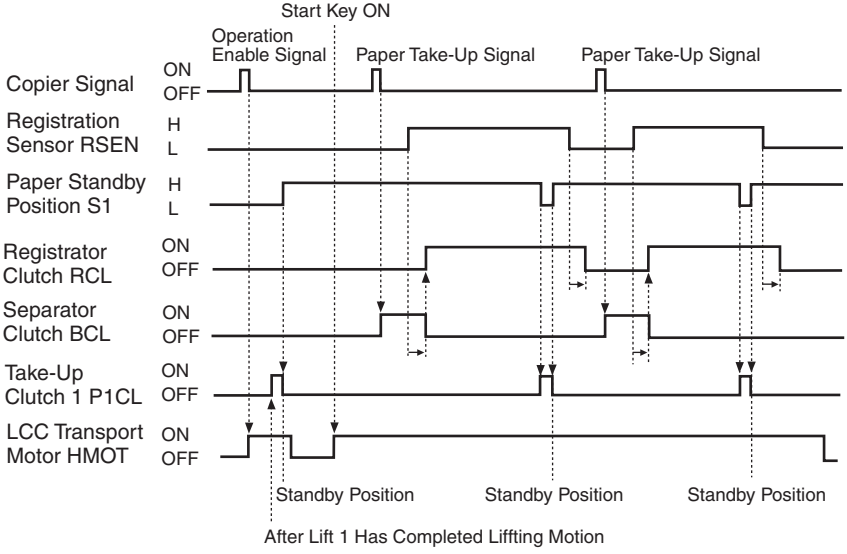

(2) Lift 2 Paper Take-Up Operations

Operation 1

- When Lift 1 runs out of paper, it is placed into its upper limit position (to establish a paper path into the copier from Lift 2).
- When the trailing edge of the last sheet of paper from Lift 1 deactivates Paper Empty Sensor 1, Paper Take-Up Roll 1 and Paper Take-Up Roll 2 are started to turn.
- Paper is transported until its leading edge activates the LCC Paper Take-Up Sensor.

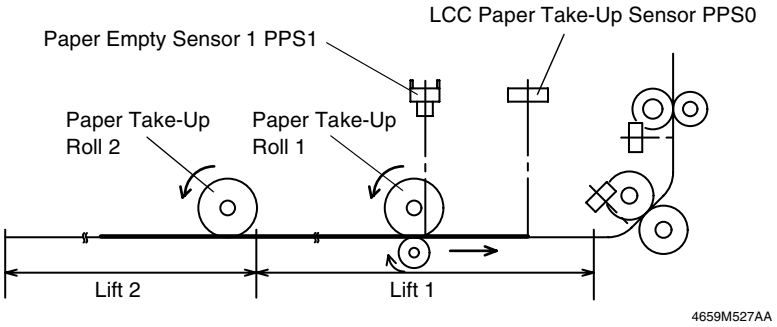

Operation 2

- Paper Take-Up Roll 1 is driven.
- Paper is transported from the position of the LCC Paper Take-Up Sensor to a point at which the Paper Standby Position Sensor is activated (this position serves as the standby position for paper take-up).

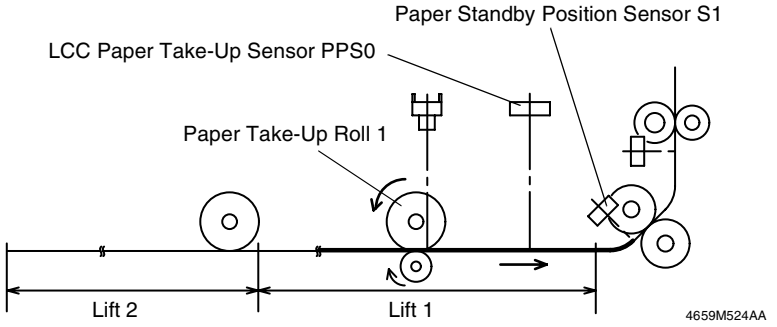

Operation 3

- A Paper Take-Up signal is sent from the copier.
- The Separator and Feed Rolls, and Paper Take-Up Roll 1 work together to transport the paper to the Registration Sensor.
- When the Registration Sensor is activated, the paper is further transported over the distance between the Registration Sensor and Vertical Transport Roller, plus a registration loop length.
- Paper Take-Up Roll 1 is stopped.
- The Vertical Transport Roller is driven to feed the paper toward the copier.
- When the trailing edge of the paper being transported deactivates Paper Empty Sensor 1, Paper Take-Up Roll 1 and Paper Take-Up Roll 2 are driven.
- The subsequent sheet of paper is transported until it activates Paper Empty Sensor 1.

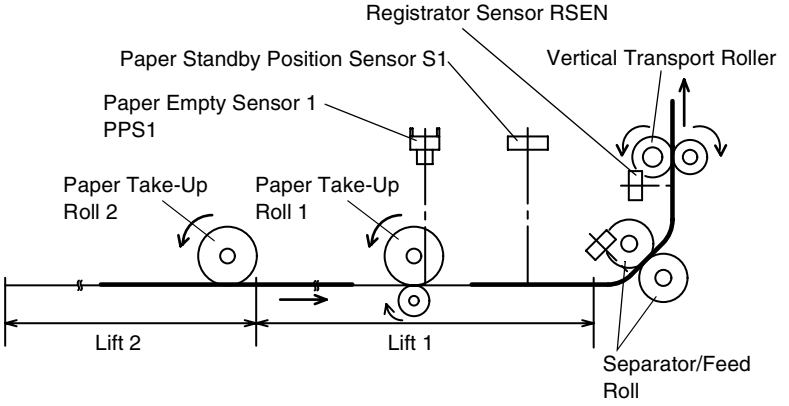

Operation 4

- After the lapse of a given period of time after the trailing edge of the preceding sheet of paper has deactivated the LCC Paper Take-Up Sensor, the subsequent sheet of paper located at Paper Empty Sensor 1 is transported to the standby position.
- Separator and Feed Rolls are brought to a stop after the lapse of a given period of time after the Registration Sensor has been deactivated by the trailing edge of the paper being taken up and fed in.
- The next Paper Take-Up signal is issued after the lapse of a given period time after the Vertical Transport Roller has started turning for the transport of the preceding sheet of paper.

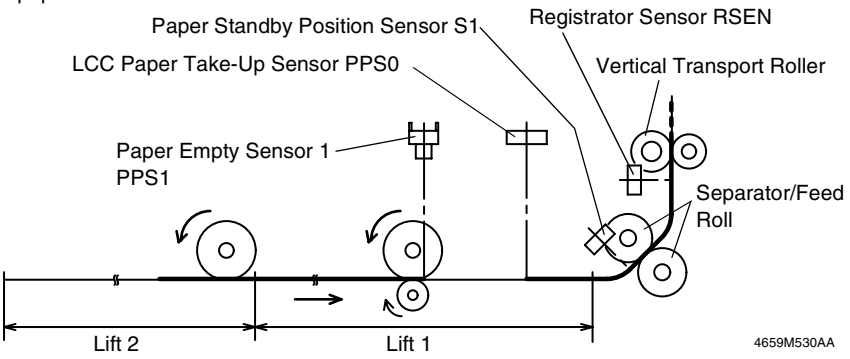

✻ These operations 1 to 4 are repeated to transport paper from Lift 2.

Taking up and feeding two sheets of paper from Lift 2

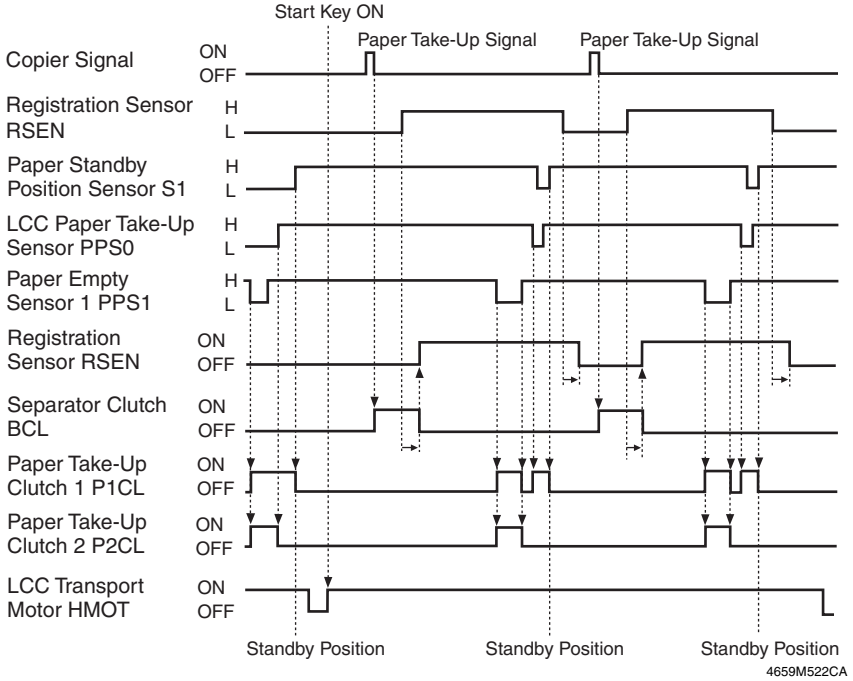

6-5. Paper Separating Mechanism

- The difference in friction coefficient between the Feed Roll and Separator Roll is used to stop the rotation of the Separator Roll for the prevention of double feed.

<Normal Feeding>

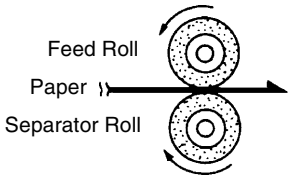

- When only one sheet of paper is taken up, the friction coefficient on the top side of the paper is equal to that on the underside. The Separator Roll is driven by the Feed Roll, which results in the paper being fed on.

<Double Feeding>

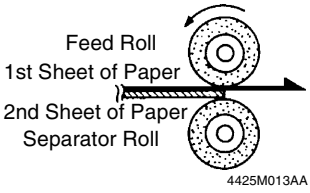

- Since the friction coefficient between the second sheet of paper and the Separator Roll is greater than that between the first and second sheets of paper, the Separator Roll remains stationary, allowing the Feed Roll to feed only the first sheet of paper.

6-6. Paper Pressure Releasing Mechanism

- When the LCC is slid out, the Pressure Release Rail pushes the Separator Roll assy downward so that it is released from the Feed Roll.

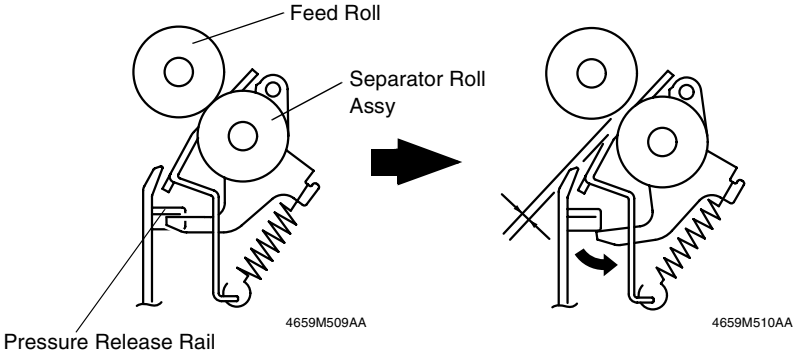

6-7. Paper Take-Up Roll Retracting Mechanism

- When the LCC is slid out, the Pressure Release Lever pushes the Paper Take-Up Roll upward so that it is released from the paper stack.

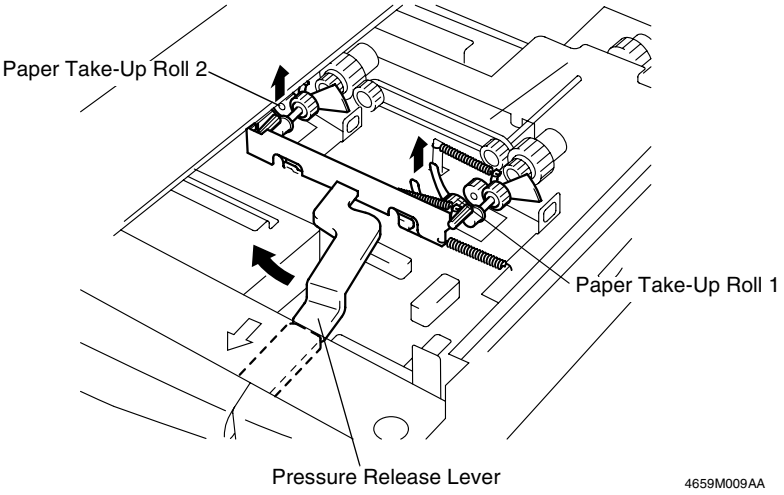

6-8. LCC-in-Position Detection

- When the LCC is slid into the copier, the light blocking plate blocks the LCC Set Sensor and the copier determines that the LCC has been slid into it.

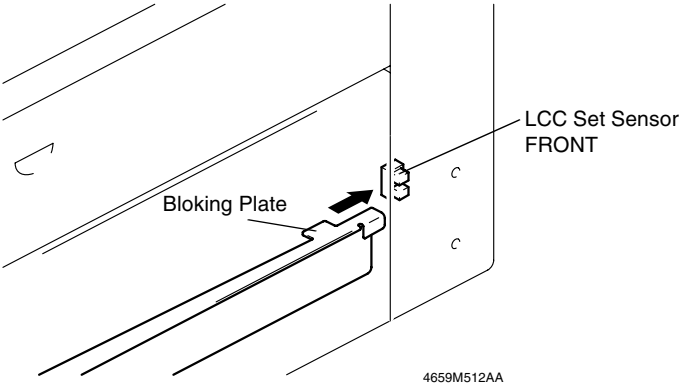

6-9. Edge Guides and Trailing Edge Stop

- The Trailing Edge Stop is secured to the specified size position with a screw. (It is not installed when Letter Crosswise paper is to be loaded.)
- The Edge Guides can be slid to the specified size positions and secured with screws.
- The Slides of the drawer must be slid all the way in the directions of the arrows.
- When the positions of the Edge Guides and Trailing Edge Stop have been changed, the corresponding paper size must be set (according to the “Paper Size Setting” procedures that follow).

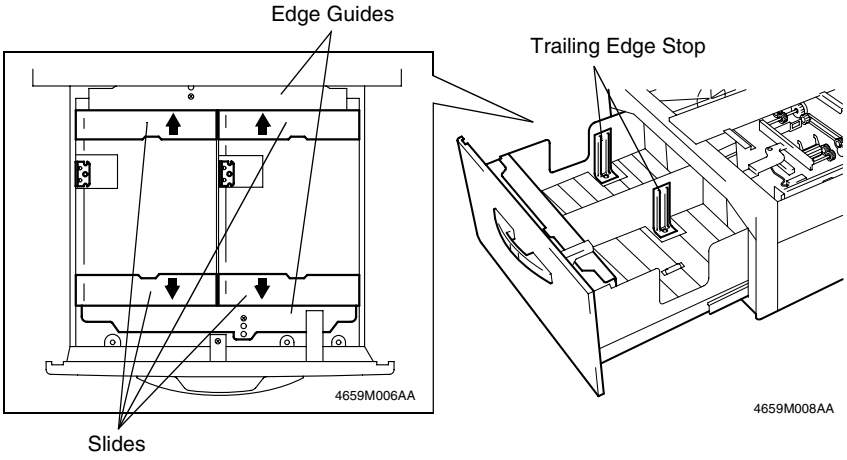

6-10. Paper Size Setting

- Paper sizes that can be set: B5C, A4C, Letter C
- After the Edge Guides and Trailing Edge Stop have been repositioned, flip keys of the DIP switch on the LCC Control Board to the positions corresponding to the paper size as detailed below.

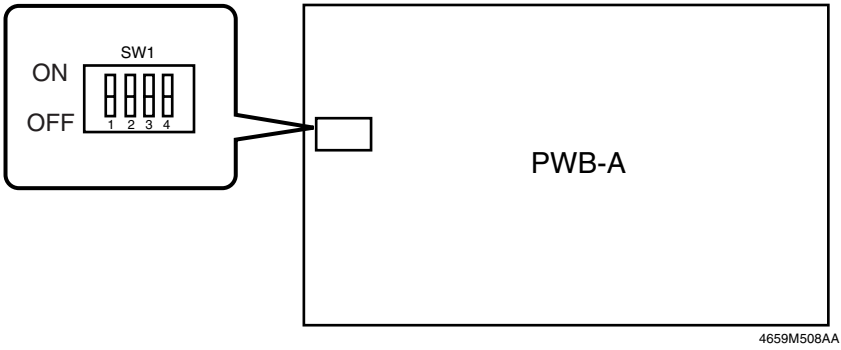

SW1	1	2	3	4
B5 Crosswise	OFF	ON	OFF	OFF
A4 Crosswise	ON	OFF	OFF	OFF
Letter Crosswise	OFF	OFF	OFF	OFF

6-11. Lifting Mechanism

- The lifting mechanism controls the ascent motion of Lift 1 and Lift 2 using the LCC Lift-Up Motor that is turned forward or backward as necessary to ensure reliable paper take-up and feeding.

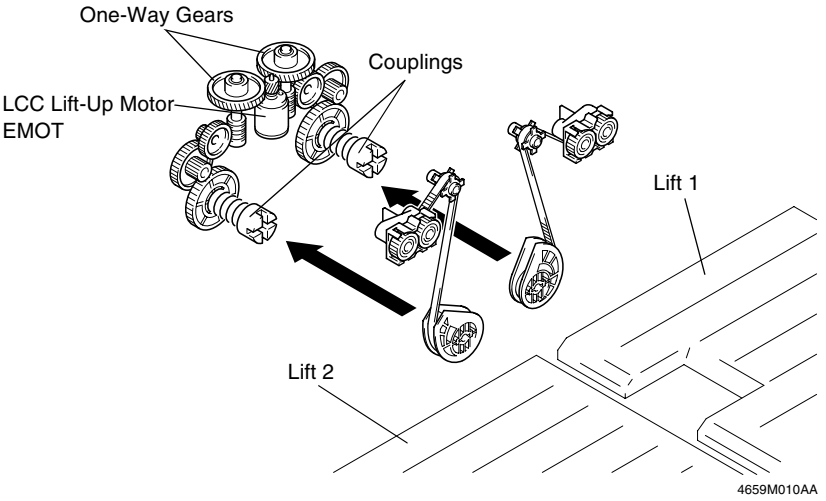

When LCC is Slid in:

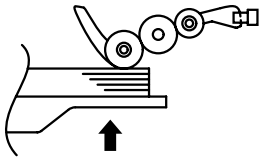

LCC Set Sensor FRONT is blocked.

↓

LCC Lift-Up Motor EMOT turns forward to raise Lift 1.

↓

The paper stack causes the light blocking plate of the Paper Take-Up Roll 1 Assy to block Lift-Up Sensor 1 LS1.

↓

EMOT is deenergized and then energized to start turning backward, thereby raising Lift 2.

↓

The paper stack causes the light blocking plate of the Paper Take-Up Roll 2 Assy to block Lift-Up Sensor 2 LS2.

↓

EMOT is deenergized.

During a Copy Cycle:

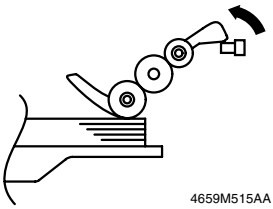

4659M515AA

Paper is consumed as copy cycles are run.

The Paper Take-Up Roll gradually lowers, unblocking the Lift-Up Sensor.

EMOT is energized and the Lift is raised. This lifts the paper stack to block the Lift-Up Sensor.

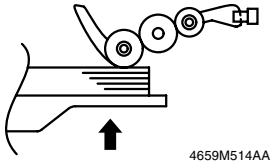

4659M514AA

(1) Lift 1 and 2 Ascent Conditions

- The LCC is slid into position.
- The Lift-Up Sensor is unblocked while a paper take-up sequence is being carried out with paper present on the Lift.

(2) Lift 1 and 2 Stop Conditions

- The Lift-Up Sensor is blocked.
- The Lift-Up Sensor is blocked while the paper stack top level position is being corrected.

When LCC Slid in:

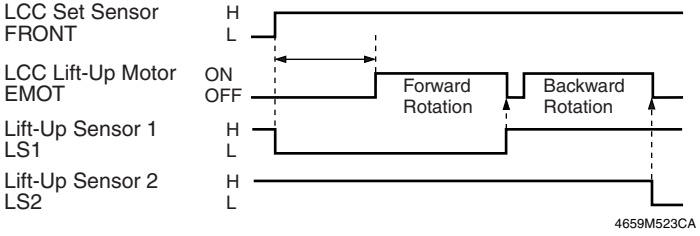

4659M523CA

(3) LCC Lift-Up Motor EMOT Control

- Rotation of the LCC Lift-Up Motor is controlled by the signals output from pins 1 and 2 of CN5A on the LCC Control Board.

EMOT	Lift 1	Lift 2	CN5A	
			1	2
Energized (Forward Rotation)	Ascent	Stop	H	L
Energized (Backward Rotation)	Stop	Ascent	L	H
Deenergized	Stop	Stop	L	L

(4) Descent Motion

- When the LCC is slid out the copier, Lift 1 and 2 are lowered. To absorb shocks that would otherwise be applied during the descent motion, springs are loaded in the rear side of the LCC.

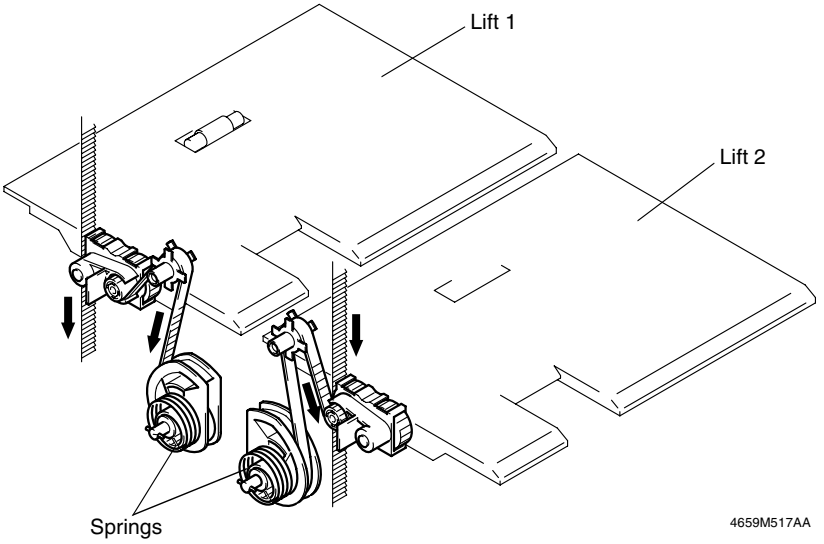

6-12. Paper Near Empty Detection

- The Paper-Near-Empty Sensor detects a paper-near-empty condition in the drawer.
- A given number of sheets of paper has been determined as the basis for detection of a paper-near-empty condition.

	Predetermined No. of Sheets (Paper Level)
Paper-Near-Empty Detected	100 ± 50 sheets

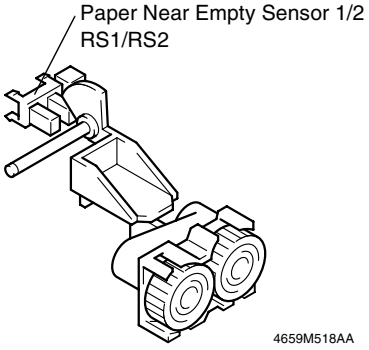

6-13. Paper Empty Detection

- The Paper Empty Sensor detects a paper-empty condition in the drawer.

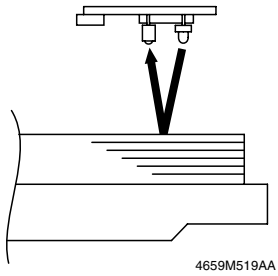

- When Paper is Loaded

Light emitted by the LED of Paper Empty Sensor 1/2 is reflected off the paper stack, causing the copier to determine that there is paper loaded in the LCC.

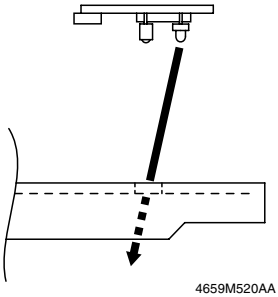

- When Paper is not Loaded

Light emitted by the LED of Paper Empty Sensor 1/2 is not reflected, causing the copier to determine that there is no paper loaded in the LCC.

6-14. Panel Display

- Paper-near-empty and paper-empty conditions are detected in Lift 1 and Lift 2.
- The paper-near-empty and paper-empty conditions are displayed on the Touch Panel.

		Lift 1	
		Paper-near-empty	Paper-empty
Lift 2	Paper-near-empty	❍	❍
	Paper-empty	❍	●

❍: Paper-near-empty display ●: Paper-empty display

6-15. Paper Dehumidifying Heaters (Option)

- The Paper Dehumidifying Heater prevents an image transfer failure from occurring, caused by paper that gets damp under changing environmental conditions (temperature and humidity).

Condition	Paper Dehumidifying Heater (Heater Switch ON)
Power cord plugged in	ON
Power Switch OFF	ON
Sleep	ON
Copy cycle	OFF
Predrive (Imaging Unit Motor energized)	OFF

DIS/REASSEMBLY, ADJUSTMENT

1. DISASSEMBLY

1-1. Maintenance Schedule

- To ensure good copies and an extended service life of the Duplex Unit, it is recommended that the maintenance jobs described in this schedule be carried out.

PM Parts	Maintenance Schedule Cycle (K)		Tools Used for Cleaning	Parts No.	QTY	Counter/ Life	Reference Page
	Clean	Replace					
Paper Take-Up Roll 1	❍	300	Cloth, alcohol	4496-3001-02	1	LCC Parts 1 LCC Parts 2	☞ D-4
Paper Take-Up Roll 2	❍	300		4496-3046-01	2		☞ D-4
Feed Roll	❍	200		4496-3013-02	1		☞ D-6
Separator Roll	❍	200		4496-3045-01	1		☞ D-6
Vertical Transport Roller	❍	–		–	1		☞ D-7
Vertical Transport Roll	❍	–		–	2		☞ D-7
Roll with torque limiter	❍	–		–	1		☞ D-7
Torque Limiter Assy	–	200	–	4496-0152-01	1		☞ D-6

K=1,000 sheets

✻ The above maintenance schedule is to be based on the value of Counter/Life.

✻ Cleaning (indicated by "❍" in the above schedule) should be performed when a paper transport failure occurs.

✻ The above information is subject to change without notice.

✻ The Feed Roll, Separator Roll, and Torque Limiter Assy should be replaced at the same time.

1-2. Removal of Exterior Parts

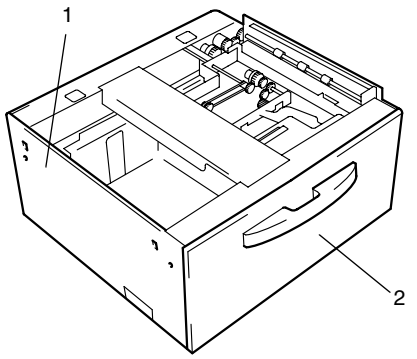

4659D001AA

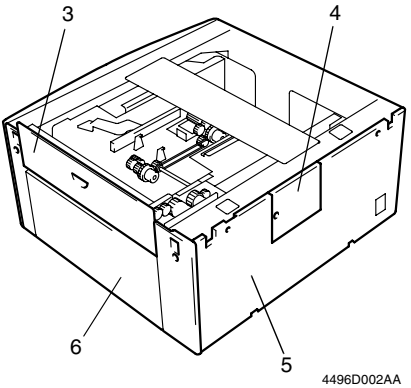

4496D002AA

No.	Part Name	Removal Steps
1	Left Cover	Remove two screws and take off the cover.
2	Front Cover	Slide out the drawer, remove three screws, and take off the cover.
3	Right Side Door	Open this door and take it off.
4	Maintenance Cover	Remove one screw and take off the cover.
5	Rear Cover	After the Maintenance Cover has been removed, remove four screws and take off the cover.
6	Right Cover	Remove two screws and take off the cover.

1-3. Removal of the Paper Take-Up Unit

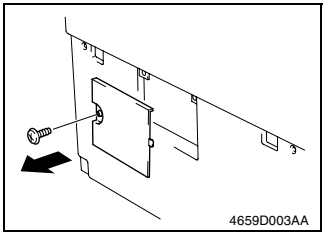

1. Slide out the LCC.
2. Remove two screws and the Left Cover.
3. Remove one screw and the Maintenance Cover.

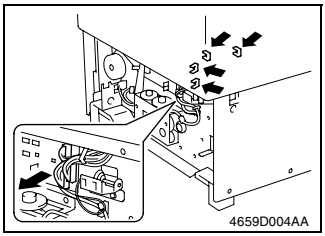

4. Remove four screws and the Rear Cover.
5. Unplug three connectors and remove the harness from four cord clamps.

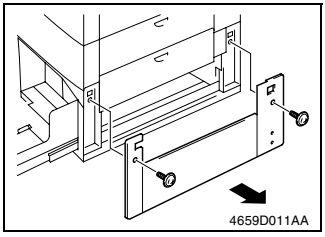

6. Remove two screws and the Right Cover.

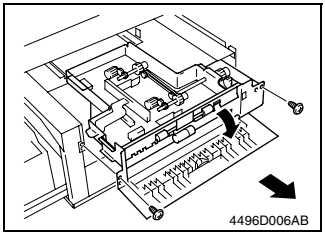

7. Open the Right Side Door.
8. Remove two screws and the Paper Take-Up Unit.

1-4. Removal of the Paper Take-Up Rolls

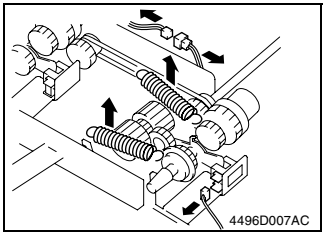

1. Remove the Paper Take-Up Unit.
2. Unplug one connector of Lift-Up Sensor 1 and one connector of Paper Take-Up Clutch 1 on the Paper Take-Up Roll 1 Assy.
3. Unhook two springs.

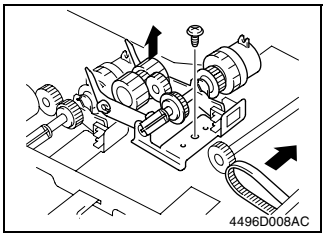

4. Remove one screw and, while taking off the timing belt in the direction of the clutch, remove the Paper Take-Up Roll 1 Assy.

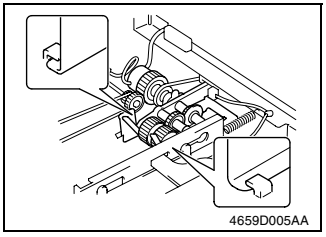

NOTE

- *When reinstalling the Paper Take-Up Roll 1 Assy, make sure that the edges of the assy are positioned correctly as illustrated.*

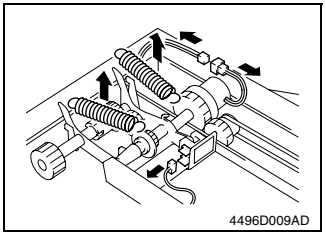

5. Unplug one connector of Lift-Up Sensor 2 and one connector of Paper Take-Up Clutch 2 on the Paper Take-Up Roll 2 Assy.
6. Unhook two springs.

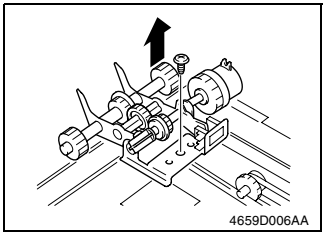

7. Remove one screw and the Paper Take-Up Roll 2 Assy.

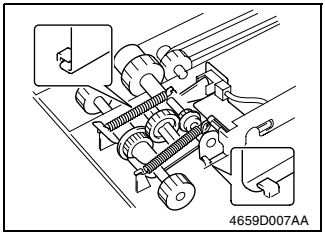

NOTE

- *When reinstalling the Paper Take-Up Roll 2 Assy, make sure that the edges of the assy are positioned correctly as illustrated.*

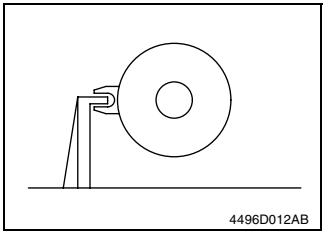

NOTE

- *When reinstalling each Paper Take-Up Roll assy, make sure that the Paper Take-Up Clutch is positioned correctly as illustrated.*

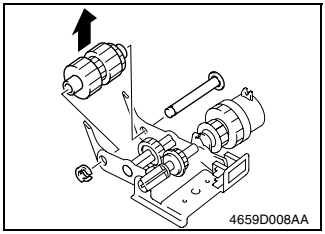

8. Snap off one C-clip from the Paper Take-Up Roll 1 shaft.
9. Remove the shaft and Paper Take-Up Roll 1.

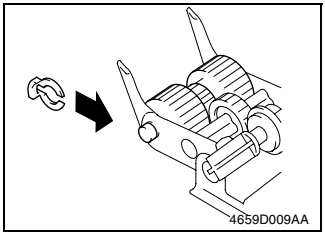

NOTE

- *When reinstalling Paper Take-Up Roll 1, make sure that the C-clip faces in the direction shown.*

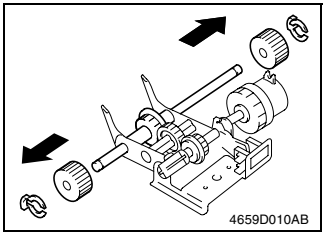

10. Snap off two C-clips and take off Paper Take-Up Roll 2.

1-5. Removal of the Feed Roll, Separator Roll and Torque Limiter Assy

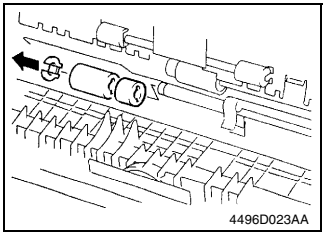

1. Open the Right Side Door.
2. Snap off one C-clip from the Separator Roll shaft and remove the Separator Roll and Torque Limiter Assy.

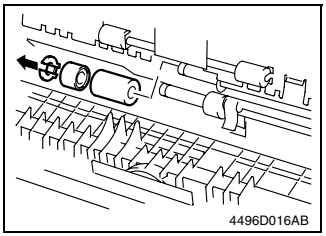

3. Snap off one C-clip from the Feed Roll shaft and remove the Feed Roll.

1-6. Cleaning of the Paper Take-Up Roll

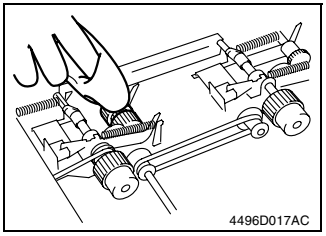

1. Remove the Paper Take-Up Unit.
2. Using a soft cloth dampened with alcohol, wipe the surface of Paper Take-Up Roll 1/2.

1-7. Cleaning of the Feed Roll and Separator Roll

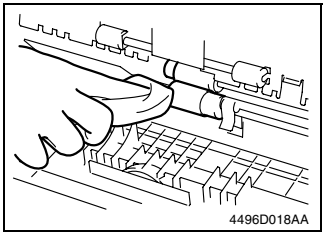

1. Open the Right Side Door.
2. Using a soft cloth dampened with alcohol, wipe the surface of the Feed/Separator Roll.

1-8. Cleaning of the Vertical Transport Roller/Rolls

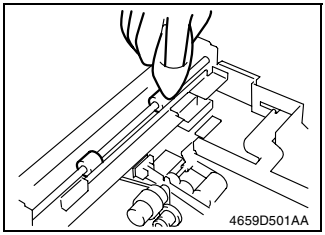

1. Remove the Paper Take-Up Unit.
2. Using a soft cloth dampened with alcohol, wipe the surface of the Vertical Transport Roller/Rolls.

1-9. Cleaning of the Roll with a Torque Limiter

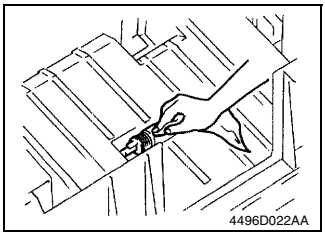

1. Slide out the LCC.
2. Using a soft cloth dampened with alcohol, wipe the surface of the roll with a torque limiter.

2. ADJUSTMENT

2-1. Reference Position Adjustment

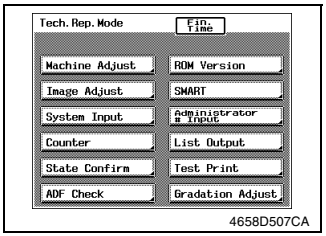

1. Press the Utility key and touch “Meter Count.”
2. Press the following keys in this order to show the Tech. Rep. mode screen: Stop → 0 → 0 → Stop → 0 → 1.
3. Touch “Machine Adjust.”

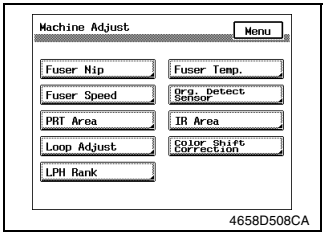

4. Touch “PRT Area.”

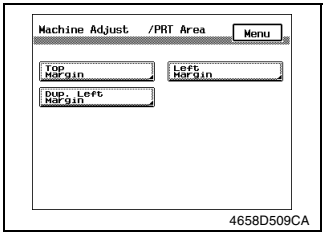

5. Touch “Left Margin.”

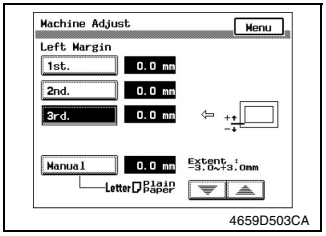

6. Touch “3rd.”

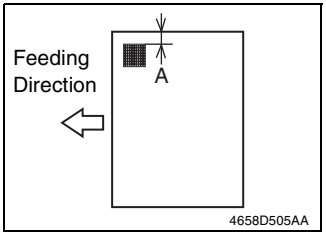

7. Press the Start key to produce a test print.
8. Measure dimension A to determine if it falls within the specified range.

✻ Specifications: 3.0 ± 1.0 mm

9. Using ▼ or ▲ key, input the difference between the measured value of dimension A and the specifications.
10. Produce another test print and make a check again.

MISFEED/MALFUNCTION DETECTION

1. MISFEED DETECTION

1-1. Location of Misfeed Detecting Sensors

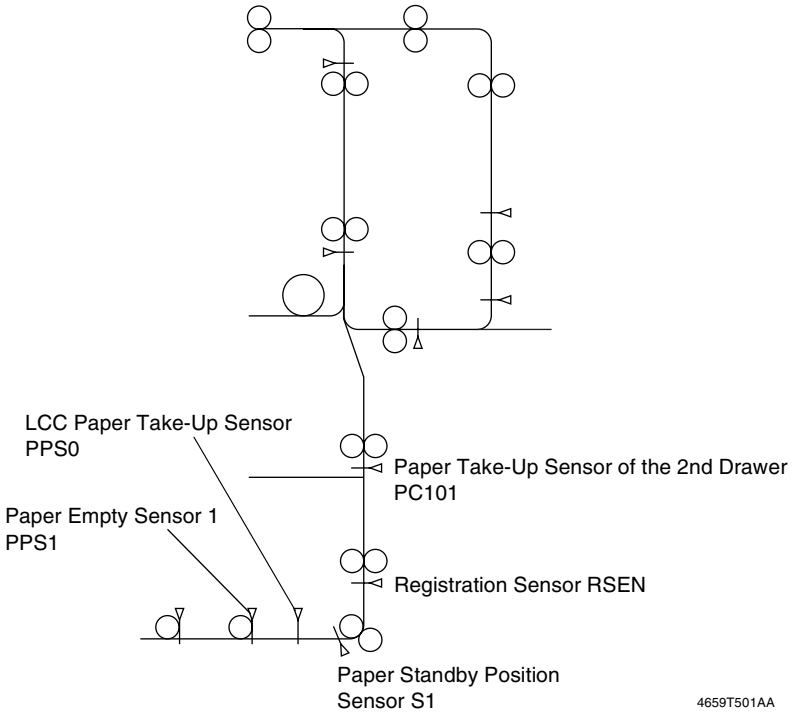

1-2. Misfeed Detection Timing

- The following lists the types of misfeed detection and detection timings for different misfeed locations.
- The symbol “L” (for the leading edge) and “T” (for the trailing edge) given in ( ) indicate the particular edge of the paper detected by the sensor.

Type	Detection Start	Detection
Paper left	Power Switch ON	Registration Sensor ON
	Misfeed reset	
Lift 1 paper take-up failure	Paper Take-Up Clutch 1 ON	Paper Standby Position Sensor (L)
Lift 2 paper take-up failure	Paper Take-Up Clutch 2 ON	Paper Empty Sensor 1 (L)
		LCC Paper Take-Up Sensor (L) ✻1
	Paper Take-Up Clutch 1 ON	Paper Standby Position Sensor (L)
Registration Sensor’s failure to detect leading edge	Separator Clutch ON	Registration Sensor (L)
Registration Sensor’s failure to detect trailing edge	Registration Clutch ON	Registration Sensor (T)
Paper take-up failure	LCC Paper Take-Up Request signal	Registration Clutch energized
Misfeed in the vertical transport section	Registration Clutch energized	Paper Take-Up Sensor of the 2nd Drawer (L)
Misfeed caused by a size error	Paper Take-Up Sensor of the 2nd Drawer (L)	Paper Take-Up Sensor of the 2nd Drawer (T)

✻ 1: Only when a misfeed condition is reset (when power is turned ON, LCC Drawer is slid into position, and the door is closed)

2. MALFUNCTION DETECTION

Code	Description	Detection Timing
C0990	LCC Lift-Up Motor EMOT failure to turn	The overcurrent detection circuit detects an overcurrent condition that lasts for a given period of time while EMOT remains energized.
C0991	Lift 1 ascent motion failure	Lift-Up Sensor 1 LS1 is not blocked (H) within a given period of time after EMOT has been energized (Lift 1 has started moving up).
C0995	LCC Transport Motor HMOT failure to turn	The HMOT Lock signal is not input for a given period of time.
C0999	Lift 2 ascent motion failure	Lift-Up Sensor 2 LS2 is not blocked (H) within a given period of time after EMOT has been energized (Lift 2 has started moving up).

PWB−A
LCC制御基板／
LCC Control Board

増設カセット部／
Additional Cassette Section

CN1
CN2
CN1A

CN7A
P1CL ON
P2CL ON
RCL ON
BCL ON
DC24V

CN11 P1CL 給紙クラッチ1／Paper Take-Up Clutch1
CN12 P2CL 給紙クラッチ2／Paper Take-Up Clutch2
CN13 RCL レジストクラッチ／Registration Clutch
CN14 BCL サバキクラッチ／Separator Clutch

CN4A
PJ4 PPS0 LCC給紙センサ／LCC Paper Take-Up Sensor
PJ5 LS2 リフトアップセンサ2／Lift-Up Sensor2
PJ6 LS1 リフトアップセンサ1／Lift-Up Sensor1
PJ7 RSEN レジストセンサ／Registration Sensor

CN3A
PJ8 SIDE ドアセットセンサ／Door Set Sensor
PJ9 EMP ペーパーエンプティセンサ2／Paper Empty Sensor2
PJ10 S1 ペーパー待機位置センサ／Paper Standby Position Sensor
PJ11 PPS1 ペーパーエンプティセンサ1／Paper Empty Sensor1
PJ12 RS2 ペーパーニアエンプティセンサ2／Paper Near Empty Sensor2

CN6A
PJ2 RS1 ペーパーニアエンプティセンサ1／Paper Near Empty Sensor1
PJ1 FRONT LCCセットセンサ／LCC Set Sensor
PJ3 HMOT LCC搬送モータ／LCC Transport Motor

*1 CW:Clock Wise
*2 CCW:Counter Clock Wise

CN2A アキ／Not Use
CN5A RS2 ON / GND / DC5V / EMOT_／CCW*2 / EMOT_／CW*1

CN17
EMOT LCCリフトアップモータ／LCC Lift-Up Motor

DWG.NO.	4659−C001−0A
TITLE	WIRING DIAGRAM
MODEL	PF−117
VOLTAGE	From the copier
EFFECTIVE MACHINE NO.	XX0201 AND ONWARD
DATE ISSUED	Oct.2000

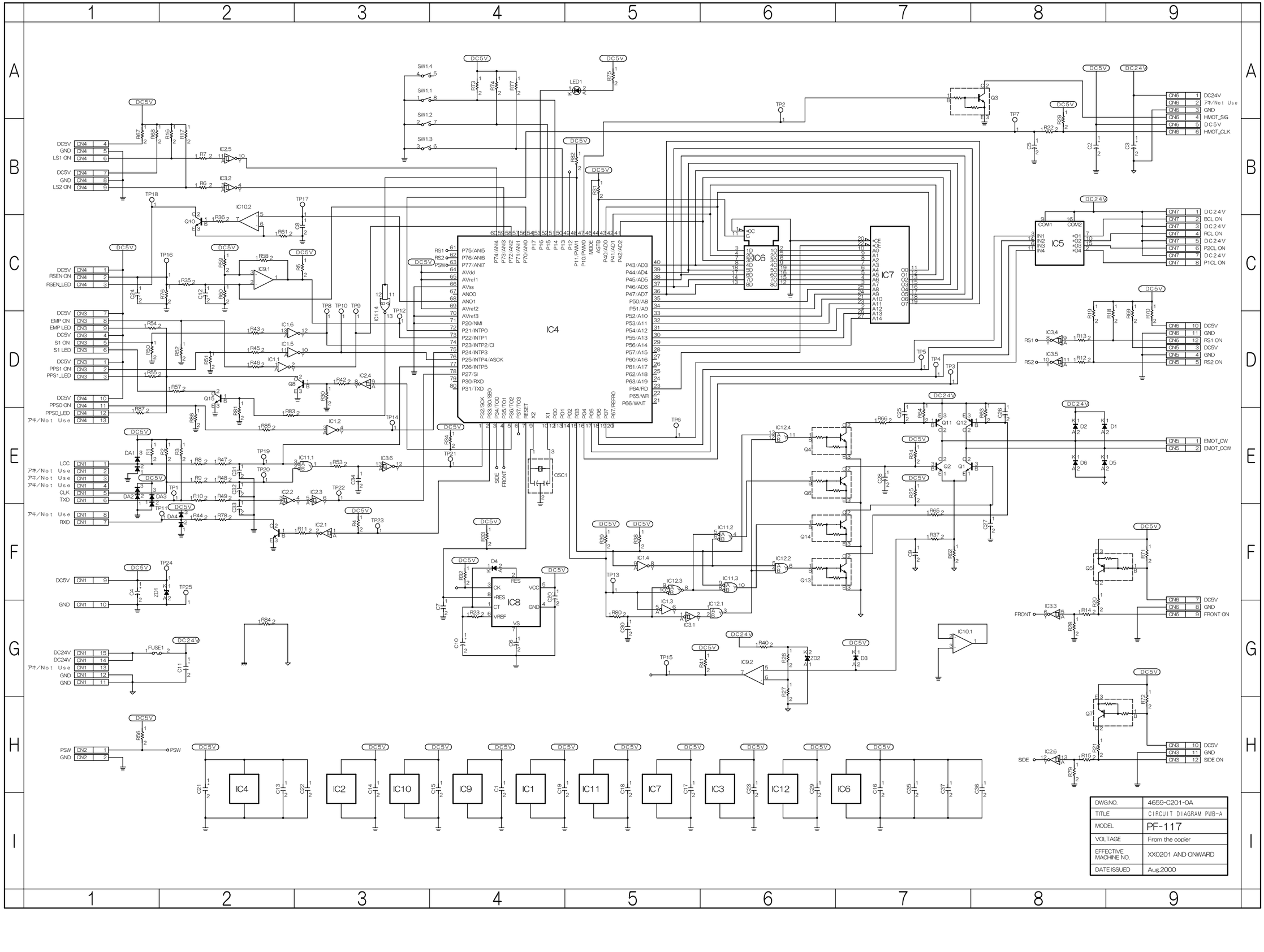

DWG.NO.	4659-C201-0A
TITLE	CIRCUIT DIAGRAM PWB-A
MODEL	PF-117
VOLTAGE	From the copier
EFFECTIVE MACHINE NO.	XX0201 AND ONWARD
DATE ISSUED	Aug.2000