FN-107/FN-108

SERVICE MANUAL

14413

CONTENTS

GENERAL, MECHANICAL/ELECTRICAL

1. SPECIFICATIONS M-1
2. PARTS IDENTIFICATION M-3
3. CROSS-SECTIONAL VIEW M-4
4. DRIVE SYSTEM M-5
5. ELECTRICAL COMPONENTS LAYOUT M-6
6. PAPER TRANSPORT M-8
   - 6-1. Paper Transport Mechanism M-8
     - (1) Entrance Section Paper Transport Mechanism M-8
     - (2) 1st Tray Paper Transport Mechanism M-9
     - (3) Finisher Tray Paper Transport Mechanism M-10
     - (4) Elevator Tray Paper Transport Mechanism M-11
   - 6-2. Paper Switchback Mechanism M-12
   - 6-3. Roller/Rolls Spacing Mechanism M-13
     - (1) Storage Roller/Rolls Spacing Mechanism M-13
     - (2) Exit Roller/Rolls Spacing Mechanism M-13
7. PUNCH MECHANISM (FN-107) M-14
8. FINISHER TRAY M-16
   - 8-1. Paper Aligning Mechanism M-17
     - (1) Aligning Plate M-17
     - (2) Paddles M-18
9. STAPLING M-19
   - 9-1. Stapling Mechanism M-19
   - 9-2. Stapling Unit Moving Mechanism M-20
   - 9-3. Staple Sheet Empty Detection M-21
10. ELEVATOR TRAY M-22
    - 10-1.Elevator Tray Ascent/Descent Mechanism M-22
    - 10-2.Elevator Tray Shifting Mechanism M-24
11. HORIZONTAL TRANSPORT UNIT M-25
    - 11-1.Paper Transport Mechanism M-26
      - (1) Paper Path Switching Mechanism M-26
      - (2) Finisher Paper Transport Mechanism M-27

SWITCHES ON PWB, TEST MODE

1. SWITCHES ON PWB S-1
2. TEST MODE S-2
   - 2-1. Test Mode Setting Procedure S-2
   - 2-2. Test Mode Operations S-2
   - 2-3. Operation in Each Test Mode Operation S-3
     - (1) 1st Tray Exit S-3
     - (2) Elevator Tray Exit S-3
     - (3) Finisher Tray Exit S-3
     - (4) Shifting Operation S-3
     - (5) Aligning Plate Operation S-4
     - (6) Stapling Unit CD Movement S-4
     - (7) Exit Roller/Rolls Spacing S-4

(8) Storage Roller/Rolls Spacing S-4
(9) Elevator Tray Operation S-5
(10) Hole Punch Operation (FN-107) S-5
(11) Hole Position Selection (FN-107) U.S.A. and Canada S-5
(12) Sensor Test S-5

DIS/REASSEMBLY, ADJUSTMENT

1. DISASSEMBLY AND REASSEMBLY D-1
1-1. Maintenance Schedule D-1
1-2. Removal of the Exterior Parts D-1
1-3. Removal of the Punch Unit D-2
1-4. Removal of the Stapling Unit D-2
2. ADJUSTMENTS D-3
2-1. Check and Adjustment of the Hole Punch Positions D-3
2-2. Adjustment of the Solenoids D-4
(1) Adjustment of the Upper/Lower Entrance Switching Solenoid (SL1) D-4
(2) Adjustment of the 1st Tray Entrance Selecting Solenoid (SL2) D-4
2-3. Timing Belt Tension Adjustment D-5
(1) Adjustment of the Upper Entrance Motor (M4) Timing Belt D-5
(2) Adjustment of the Lower Entrance Motor (M2) Timing Belt D-5
(3) Adjustment of the Exit Motor (M3) Timing Belt D-5
2-4. Adjustment of the Elevator Tray Upper Limit Sensor D-6

TROUBLESHOOTING

1. SENSOR CHECK T-1
1-1. Sensor Check Screen T-1
1-2. Sensor Check List T-2
1-3. Sensor Check Procedure T-4
2. MISFEED DETECTION AND TROUBLESHOOTING PROCEDURES T-5
2-1. Misfeed Detecting Sensor Layout T-5
2-2. Misfeed Detection T-6
2-3. Misfeed Troubleshooting Procedures T-7
(1) Transport misfeed T-7
(2) Misfeed at the 1st Tray exit T-7
(3) Misfeed at the Elevator Tray exit T-8
(4) Paper stack exit misfeed T-8
(5) Staple misfeed T-8
3. MALFUNCTION DETECTION AND TROUBLESHOOTING PROCEDURES T-9
3-1. Malfunction Detection T-9
3-2. Malfunction Troubleshooting Procedures T-10
(1) C0B20 ..... T-10
(2) C0B30 ..... T-10
(3) C0B48 ..... T-10
(4) C0B4A T-10
(5) C0B50 ..... T-11
(6) C0B54 (FN-107) T-11
(7) C0B73 (FN-107) T-11

(8) C0B78 (FN-107): U.S.A. and Canada T-11
(9) C0B80 ..... T-11
(10) C0BA0 ..... T-12

GENERAL, MECHANICAL/ELECTRICAL

1. SPECIFICATIONS

Type	:	Multi Staple Finisher (FN-107) Single Staple Finisher (FN-108)
Installation	:	Freestanding
Modes	:	Non-Sort — Copier Non-Sort, Sort, Group Sort Staple, Group Staple — PC Print Hole Punch (FN-107)

Copy Medium

Mode	Paper Type	Paper Size	Paper Weight	Capacity	Finishing Tray	Max. No. of Sheets to be Stapled
Non-Sort	Plain paper	A3L to A6L 11 × 17 to 5-1/2 × 8-1/2	64 to 209 g/m^2 17 to 55-1/2 lb	250 sheets	1st Tray	———
	Thick paper			20 sheets		
	Transparencies					
	Translucent paper					
	Postcards					
	Envelopes					
Sort, Group	Plain paper	A3L to B5L/C 11 × 17 to 8-1/2 × 11	64 to 209 g/m^2 17 to 55-1/2 lb	FN-107: 3,000 sheets (A4L or smaller); 1,500 sheets (B4L or larger) FN-108: 1,000 sheets (A4L or smaller); 500 sheets (B4L or larger)	Elevator Tray	———
	Thick paper					
Sort Staple, Group Staple	Plain paper	A3L to B5L 11 × 17 to 8-1/2 × 11	64 to 90 g/m^2 17 to 24 lb			FN-107: 50 sheets* (64 to 90 g/m^2, 17 to 24 lb) FN-108: 30 sheets* (64 to 80 g/m^2, 17 to 21 lb)
Hole Punch	Plain paper			———	1st Tray, Elevator Tray	———

* : 20 sheets if originals of high ID (Color Wise 3) is used.
: 35 sheets when using Color Copy 90 paper (FN-107).
: 15 sheets when using Color Copy 90 paper (FN-108).
: 20 sheets when using Radiant White paper (FN-108).

Registration	:	Center
No. of Holes	:	2, 3 or 4 holes
Power Requirements	:	DC 24 V (supplied from copier) DC 5 V (generated by Finisher)
Power Consumption	:	63 W
Dimensions	:	Width: 538 mm, 21-1/4 Depth: 629 mm, 24-3/4 Height: 978 mm, 38-1/2
Mass	:	FN-107: 39.2 kg, 86-1/2 lb FN-108: 35.5 kg, 78-1/4 lb
Environmental Requirements	:	Same as copier
Supplies	:	Staple Cartridge

2. PARTS IDENTIFICATION

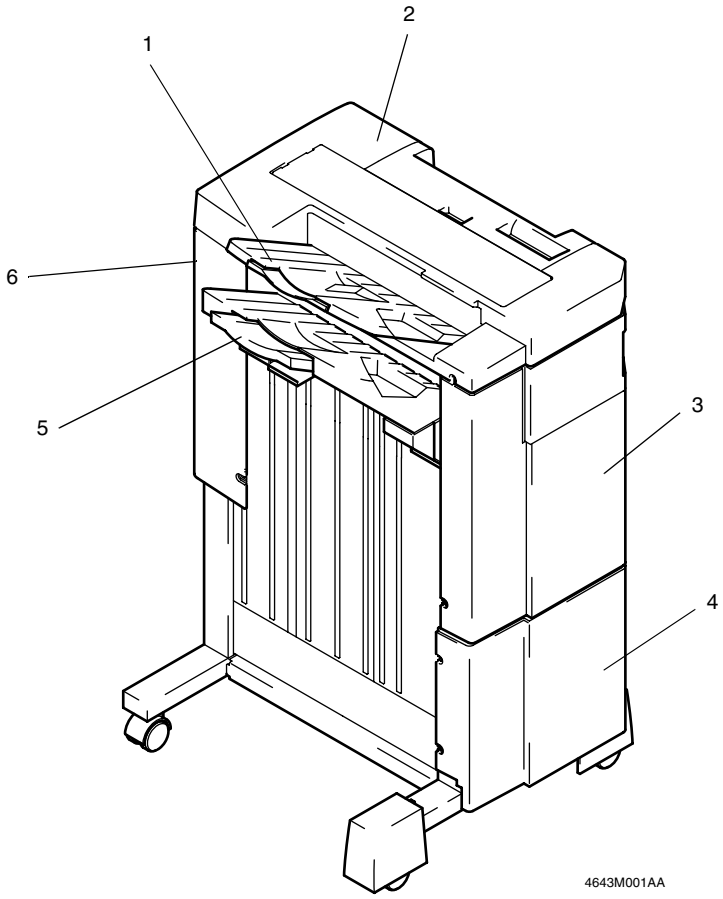

1. 1st Tray
2. Upper Cover
3. Upper Front Cover
4. Lower Front Cover
5. Elevator Tray
6. Rear Cover

3. CROSS-SECTIONAL VIEW

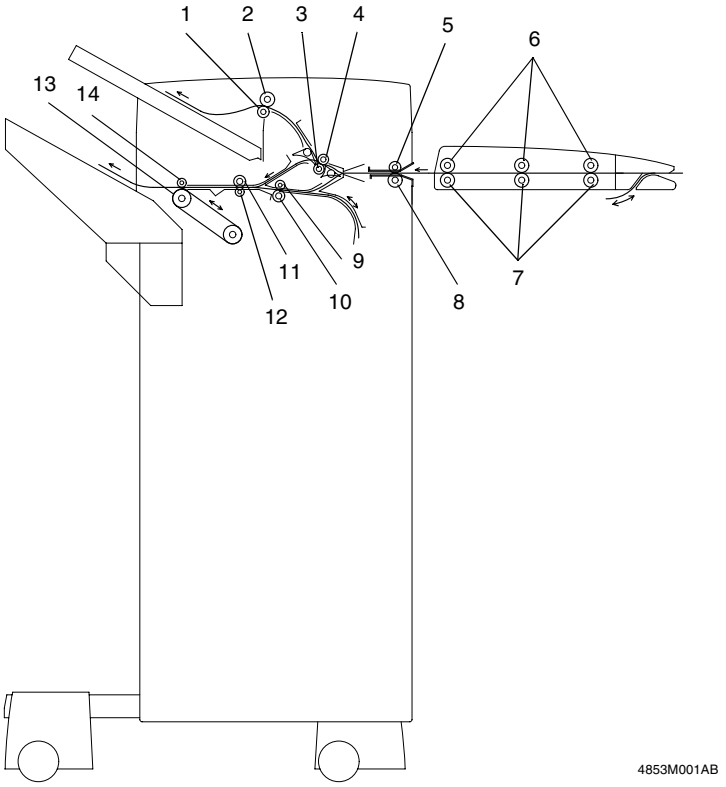

1. 1st Tray Exit Roll
2. 1st Tray Exit Roller
3. Upper Path Transport Roller
4. Upper Path Transport Roll
5. Entrance Roller
6. Transport Rolls
7. Transport Rollers
8. Entrance Roll
9. Lower Path Transport Roll
10. Lower Path Transport Roller
11. Storage Roller
12. Storage Roll
13. Exit Roller
14. Exit Roll

4. DRIVE SYSTEM

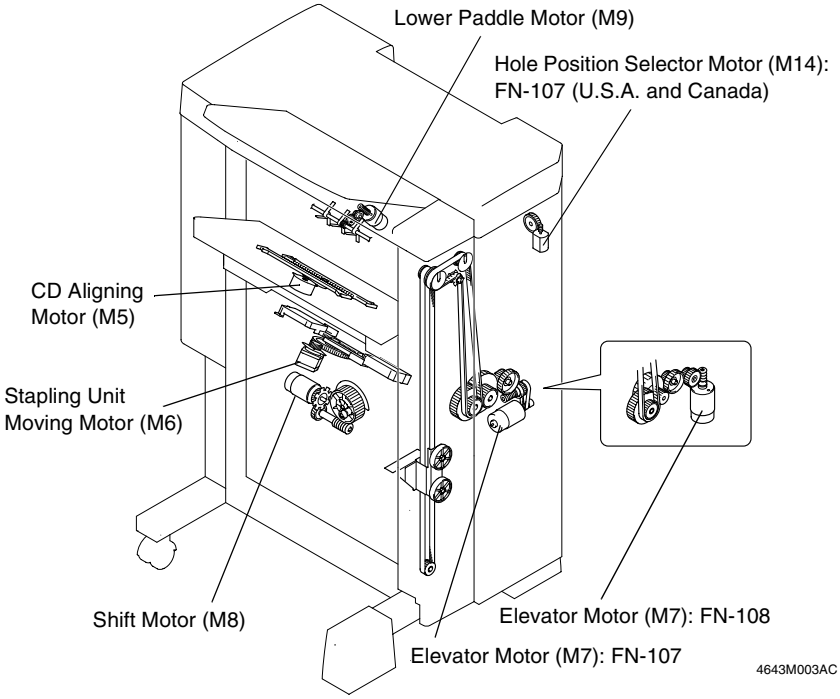

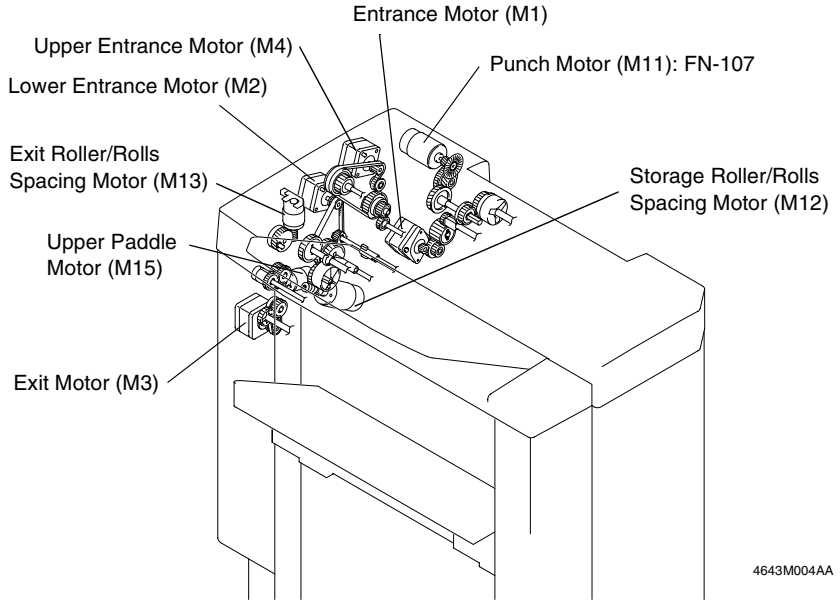

5. ELECTRICAL COMPONENTS LAYOUT

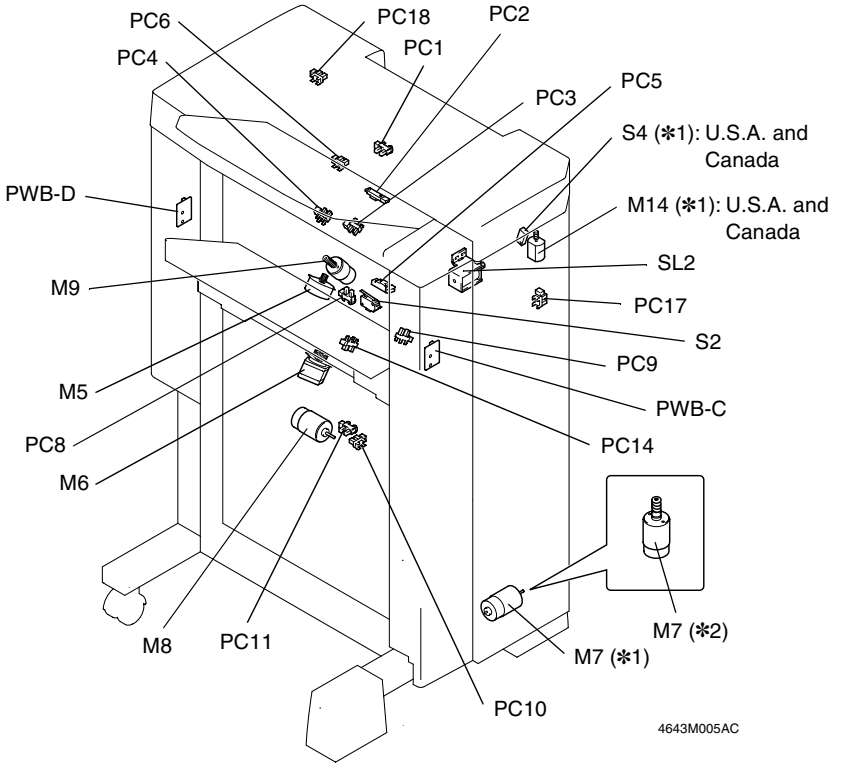

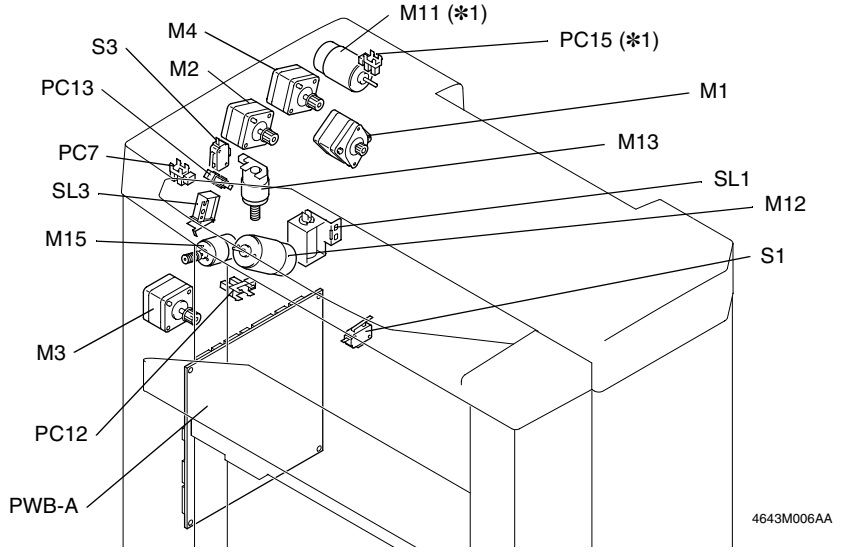

Symbol	Name	Symbol	Name
PWB-A	Control Board	PC1	1st Tray Exit Sensor
PWB-C	Elevator Tray Upper Limit Sensor LED	PC2	Lower Entrance Sensor
		PC3	Storage Sensor
PWB-D	Elevator Tray Upper Limit Sensor PQ	PC4	Upper Entrance Sensor
		PC5	Finisher Tray Paper Detecting Sensor
M1	Entrance Motor		
M2	Lower Entrance Motor	PC6	1st Tray Full Detecting Sensor
M3	Exit Motor	PC7	Elevator Tray Full Detecting Sensor
M4	Upper Entrance Motor		
M5	CD Aligning Motor	PC8	Elevator Tray Paper Detecting Sensor
M6	Stapling Unit Moving Motor		
M7 (✻1, ✻2)	Elevator Motor	PC9	CD Aligning Home Position Sensor
M8	Shift Motor		
M9	Lower Paddle Motor	PC10	Shift Home Position Sensor
M11 (✻1)	Punch Motor	PC11	Shift Motor Pulse Sensor
M12	Storage Roller/Rolls Spacing Motor	PC12	Storage Roller Home Position Sensor
M13	Exit Roller/Rolls Spacing Motor	PC13	Exit Roller Home Position Sensor
M14 (✻1)	Hole Position Selector Motor	PC14	Staple Home Position Sensor
M15	Upper Paddle Motor	PC15 (✻1)	Punch Motor Pulse Sensor
SL1	Upper/Lower Entrance Switching Solenoid	PC17	Front Door Detecting Sensor
		PC18	Upper Cover Detecting Sensor
SL2	1st Tray Entrance Selecting Solenoid	S1	Set Switch
		S2	Elevator Tray Upper Limit Switch
SL3	Upper Paddle Solenoid		
		S3	Elevator Tray Lower Limit Switch
		S4 (✻1)	Hole Punch Position Switch

(✻1): Parts used exclusively for FN-107
(✻2): Parts used exclusively for FN-108

6. PAPER TRANSPORT

6-1. Paper Transport Mechanism

(1) Entrance Section Paper Transport Mechanism

- The Entrance Roller is turned to transport the paper into the Finisher as the Entrance Motor is energized.

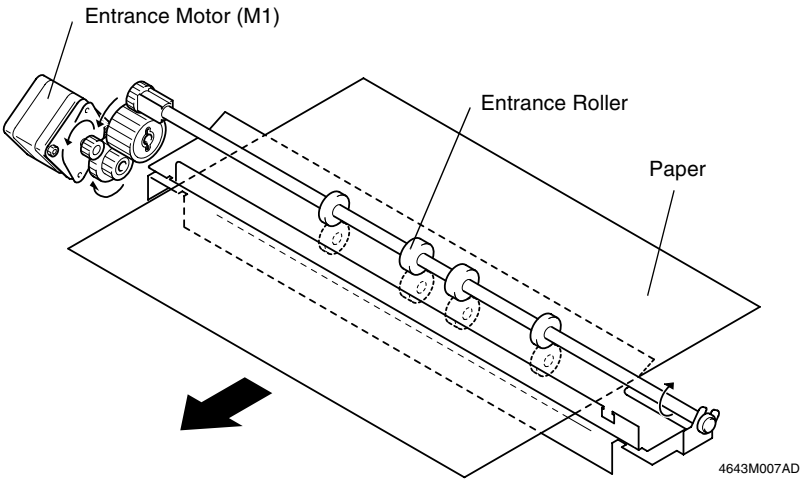

	CONTROL SIGNAL	Energized	Deenergized	WIRING DIAGRAM
M1	PWB-A PJ9A-1~-4	Pulse output		4-B

(2) 1st Tray Paper Transport Mechanism

- Paper transport to the 1st Tray takes place when the Finisher is in the Non-Sort mode.
- The Upper Path Transport Roller and 1st Tray Exit Roller turn to transport the paper into the 1st Tray as the motor is energized.
- The 1st Tray Entrance Selecting Solenoid and Upper/Lower Entrance Switching Solenoid are energized to select the paper path into the 1st Tray.

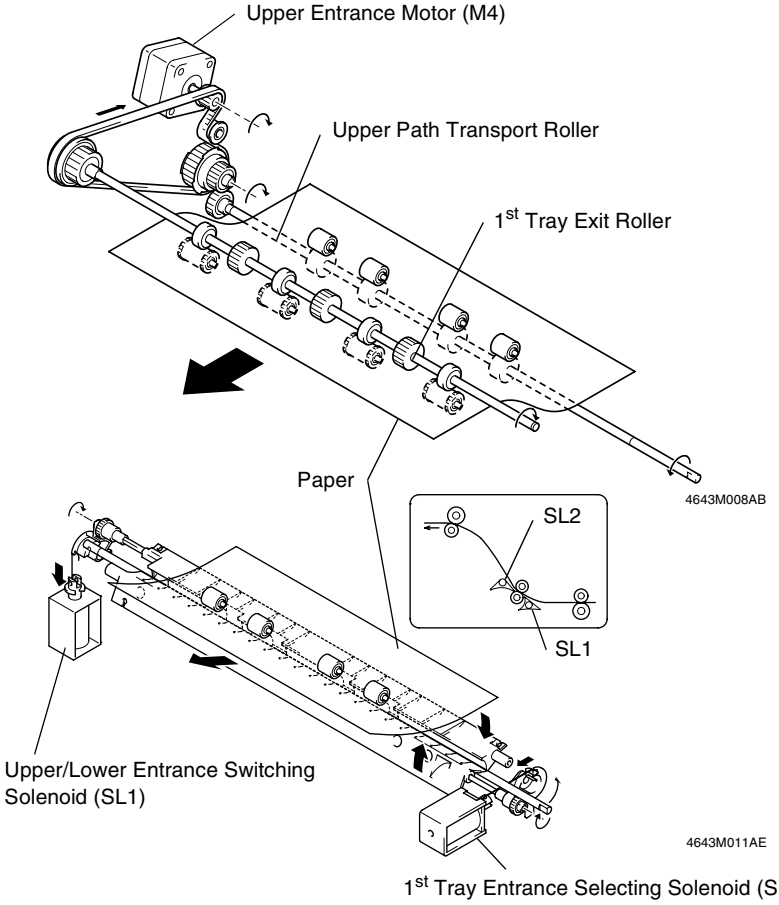

	CONTROL SIGNAL	Energized	Deenergized	WIRING DIAGRAM
M4	PWB-A PJ9A-5~-8	Pulse output		4-B
SL1	PWB-A PJ18A-2	H L	H	8-E
SL2	PWB-A PJ18A-4	H L	H	9-E

(3) Finisher Tray Paper Transport Mechanism

- Paper transport to the Finisher Tray takes place when the Finisher is in the Staple mode.
- As the Lower Entrance Motor is energized, the Storage Roller turns to transport the paper toward the exit direction.
- By turning the Exit Motor backward, paper is transported onto the Finisher Tray.
- Either the upper paper path or lower paper path is used to transport paper onto the Finisher Tray.
- The upper paper path is selected when the Upper/Lower Entrance Switching Solenoid is energized, while the 1st Tray Entrance Selecting Solenoid is deenergized.
- The lower paper path is selected when the Upper/Lower Entrance Switching Solenoid is deenergized.

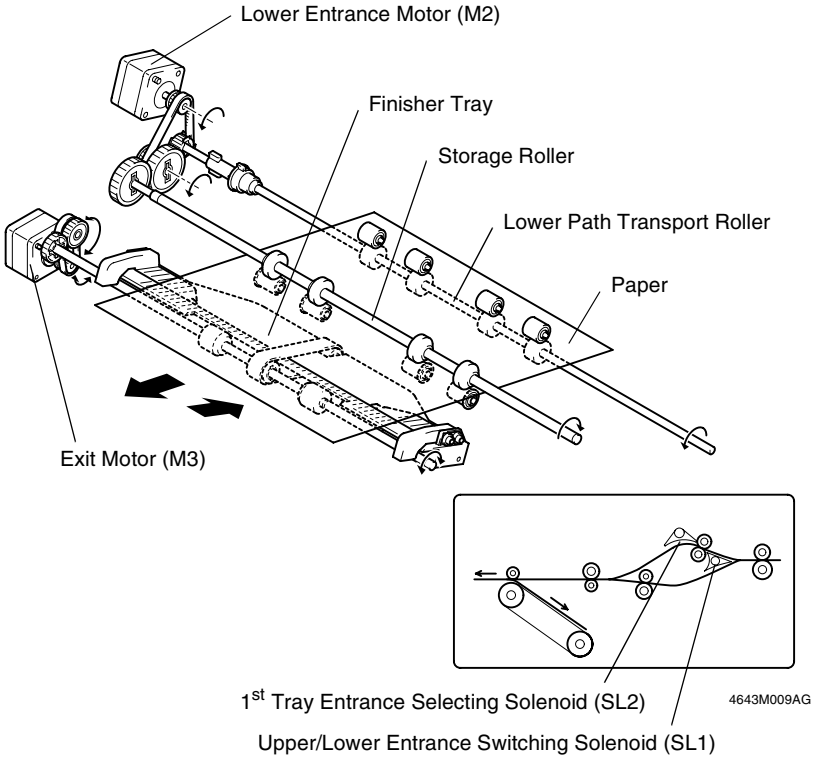

	CONTROL SIGNAL	Energized	Deenergized	WIRING DIAGRAM
M2	PWB-A PJ9A-9~-12	Pulse output		4-A

(4) Elevator Tray Paper Transport Mechanism

- Paper transport to the Elevator Tray takes place when the Finisher is in the Sort or Group mode.
- As the motor is energized, the Exit Roller turns to transport the paper into the Elevator Tray.
- Either the upper paper path or lower paper path is used to transport paper onto the Elevator Tray.
- The upper paper path is selected when the Upper/Lower Entrance Switching Solenoid is energized, while the 1st Tray Entrance Selecting Solenoid is deenergized.
- The lower paper path is selected when the Upper/Lower Entrance Switching Solenoid is deenergized.

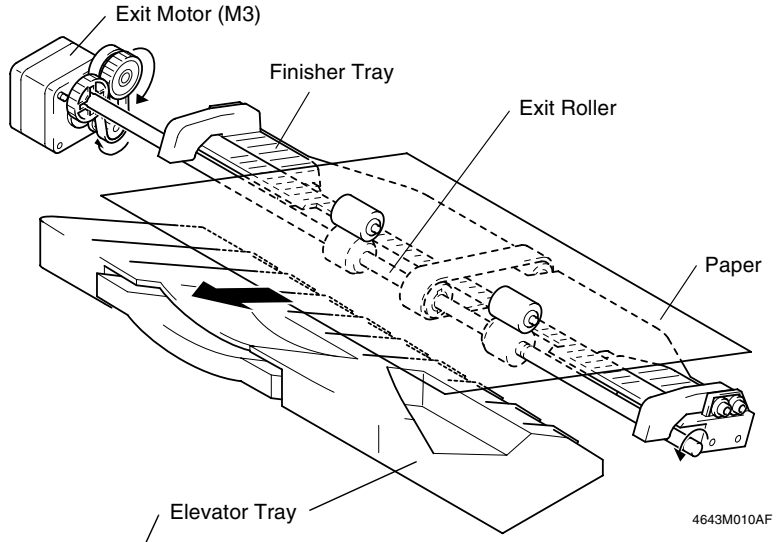

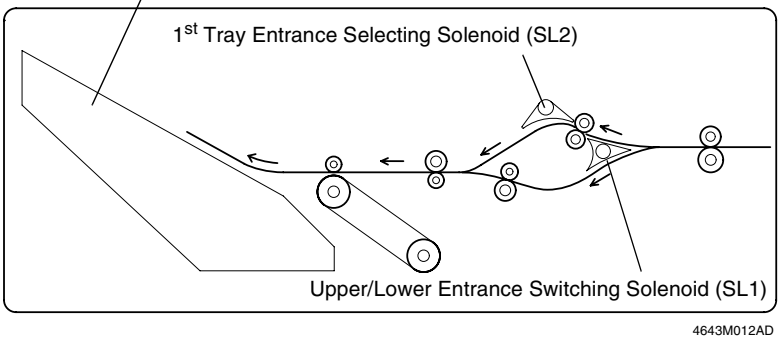

	CONTROL SIGNAL	Energized	Deenergized	WIRING DIAGRAM
M3	PWB-A PJ8A-1~-4	Pulse output		3-A

6-2. Paper Switchback Mechanism

- When the last paper of the first copy set is transported onto the Finisher Tray during a multi-copy cycle in the Sort Staple mode, the first paper of the subsequent copy set, which is to be next transported, undergoes a switchback sequence. The paper for the switchback is transported via the lower paper path.
- The second paper of the second copy set is placed over the paper which has undergone the switchback sequence. After the first copy set has been fed into the Elevator Tray, the first and second sheets of paper of the second copy set are together transported onto the Finisher Tray.
- The switchback sequence of the paper is performed by turning the motor backward, which turns the Lower Path Transport Roller and Storage Roller backward.
- The sheet of paper to be transported next to the one subjected to the switchback sequence is transported via the upper paper path.
- No switchback sequence is carried out if the interval between sheets of paper is wide as when using paper of a large size.

<Three A4C originals for two copy sets>

①, ②, ③: Sheets of paper for the first copy set
①', ②', ③': Sheets of paper for the second copy set

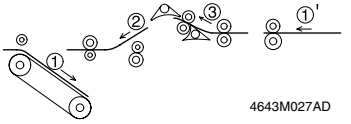

4643M027AD

The sheets of paper for the first copy are transported via the upper paper path onto the Finisher Tray.

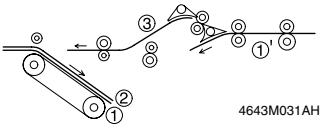

4643M031AH

The first sheet of paper of the second copy set is transported via the lower paper path.

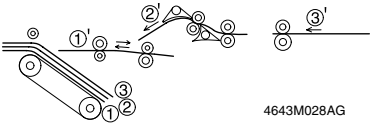

4643M028AG

The first sheet of paper of the second copy set undergoes the switchback sequence and stops. The second sheet of paper stops as soon as its trailing edge leaves the Entrance Roller.

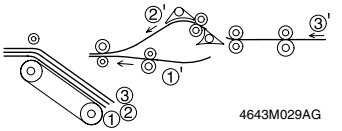

4643M029AG

The first and second sheets of paper of the second copy set are transported together, one on top of the other.

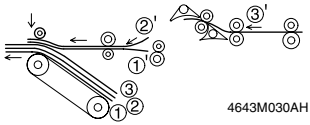

4643M030AH

The Exit Rolls are pressed against the Exit Roller to feed the sheets of paper of the first copy set out. At the same time, the first and second sheets of paper of the second copy set are transported toward the exit.

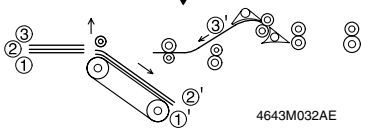

4643M032AE

When the first copy set is fed out, the Exit Roller starts turning backward to transport the first and second sheets of paper of the second copy set to the Finisher Tray. The Exit Rolls leave the Exit Roller.

6-3. Roller/Rolls Spacing Mechanism

(1) Storage Roller/Rolls Spacing Mechanism

- The Storage Roller briefly stops when the first sheet of paper completes a switchback sequence during a multi-copy cycle in the Sort Staple mode. If, however, paper measures 217 mm or more in the FD direction, the leading edge of the second sheet of paper reaches the Storage Roller before the roller stops turning. The Storage Roller is therefore raised up to allow a given clearance from the Storage Rolls.
- The Storage Roller is spaced from the Storage Rolls as a cam is turned by the corresponding motor.

(2) Exit Roller/Rolls Spacing Mechanism

- Paper needs to be temporarily transported to the Finisher Tray in the Staple mode, which makes it necessary to raise the Exit Rolls to provide a given clearance from the Exit Roller.
- After the stapling sequence has been completed, the Exit Rolls are lowered and pressed against the Exit Roller so that the paper can be fed out.
- The Exit Rolls are spaced from the Exit Roller as a lever is moved to the right and left by the cam which is rotated by the motor.

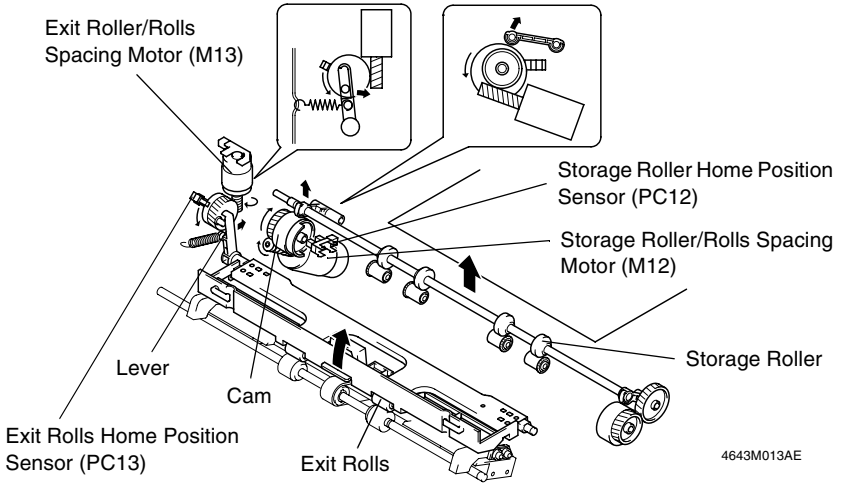

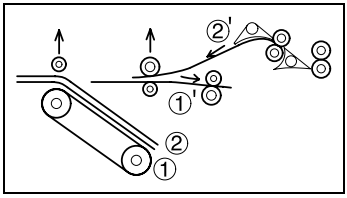

	CONTROL SIGNAL	Energized	Deenergized	WIRING DIAGRAM
M12	PWB-A PJ8A-6	Pulse output	L	3-A
M13	PWB-A PJ16A-2	H	L	9-D

7. PUNCH MECHANISM (FN-107)

- The paper being transported through the Finisher is briefly stopped and holes are made in a space near its trailing edge.
- When the Punch Motor is energized and the electromagnetic spring clutch fitted to the Punch Roller is energized, the Punch Bars move up and down to make holes in the paper.

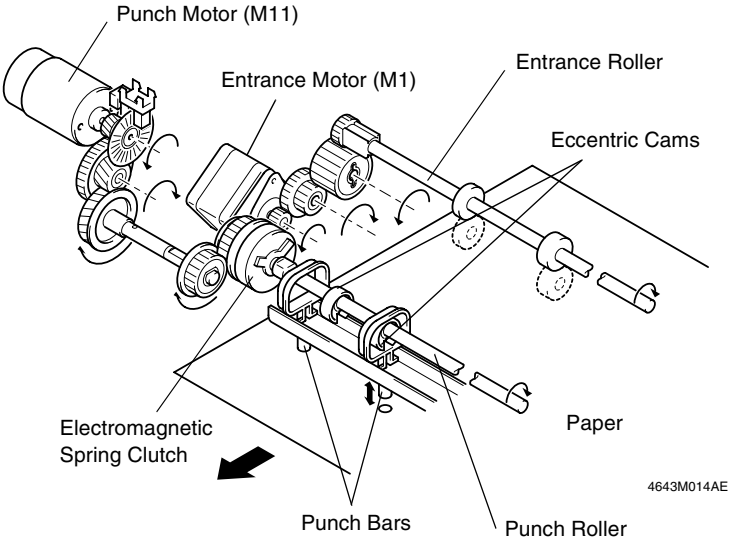

(Operation)
The Entrance Motor is energized and paper is allowed into the Finisher.

↓

The trailing edge of the paper moves past the Paper Sensor of the Horizontal Transport Unit.

↓

A given period of time thereafter, the Upper Entrance Motor or Lower Entrance Motor is deenergized to bring the paper to a stop.

↓

The electromagnetic spring clutch is energized to turn the Punch Roller and the eccentric cams.

↓

The Punch Bars move up and down to make holes in the paper.

↓

The Upper Entrance Motor or Lower Entrance Motor is energized to transport the paper.

	CONTROL SIGNAL	Energized	Deenergized	WIRING DIAGRAM
M11	PWB-A PJ6A-1	Pulse output	H	2-C

U.S.A. and Canada

- The Hole Position Selector Motor and Hole Punch Position Switch are employed to move the lock holder as necessary to select the hole positions (2 or 3 holes).

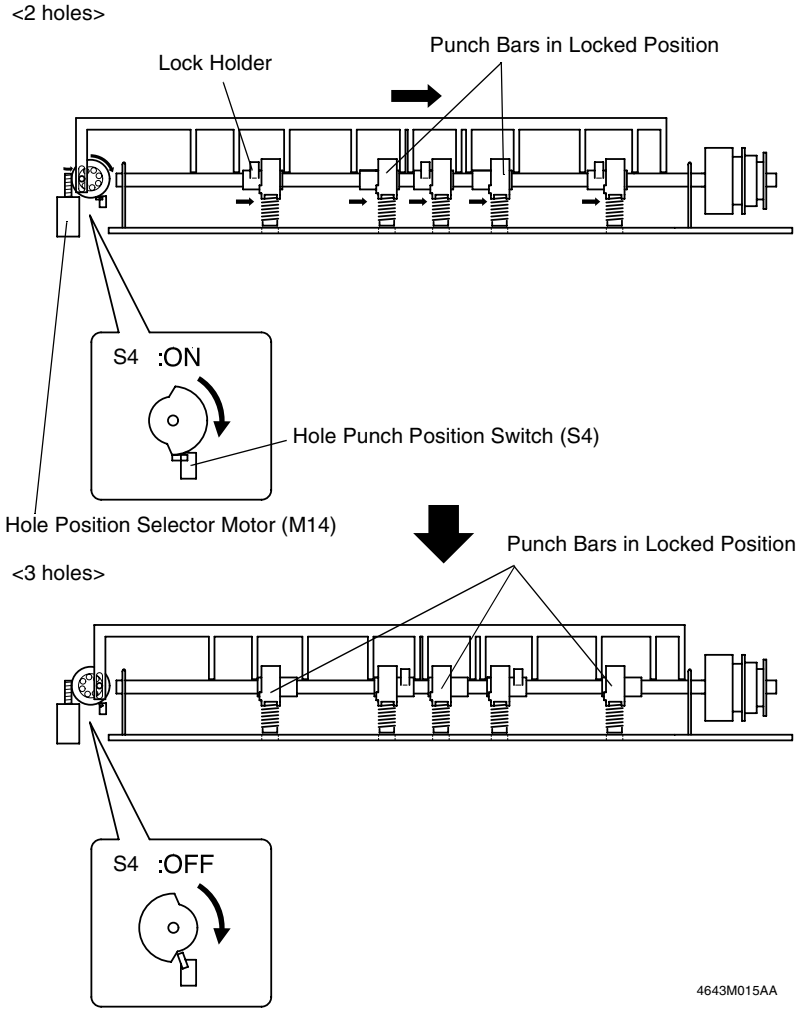

8. FINISHER TRAY

- Sheets of paper are properly aligned and stapled together on the Finisher Tray before being fed out into the Elevator Tray.

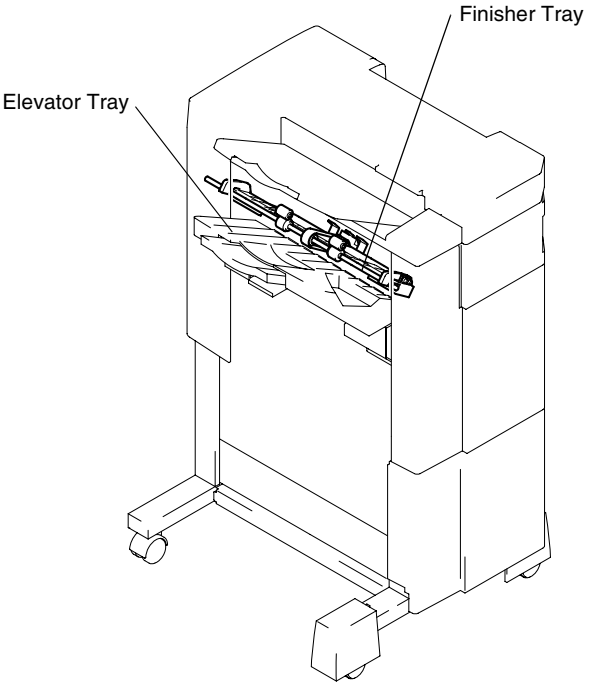

4643M016AA

8-1. Paper Aligning Mechanism

- The Aligning Plate is moved and the Paddles are turned to align paper correctly for stapling.

(1) Aligning Plate

- The Aligning Plate is moved to align the paper in the crosswise direction with reference to the center position of the Finisher Tray.
- The Aligning Plate is moved as the CD Aligning Motor turns forward or backward.
- The CD Aligning Home Position Sensor detects the Aligning Plate at its home position. The movement of the Aligning Plate is determined with this home position used as the reference.
- The movement of the plate is varied depending on the width of the paper.

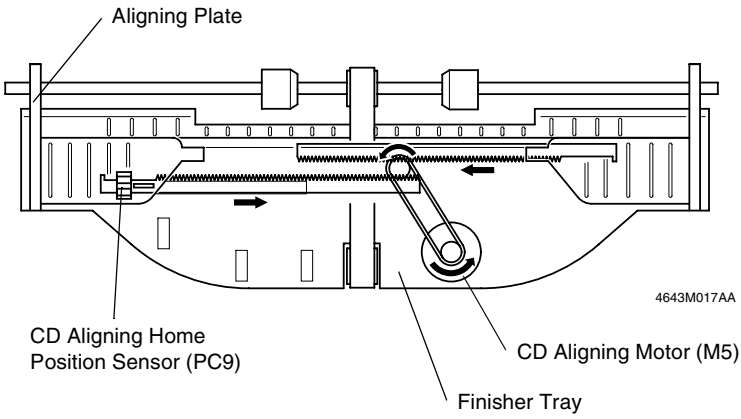

	CONTROL SIGNAL	Energized	Deenergized	WIRING DIAGRAM
M5	PWB-A PJ11A-5~-8	Pulse output		6-B

	CONTROL SIGNAL	Blocked	Unblocked	WIRING DIAGRAM
PC9	PWB-A PJ25A-6	H	L	2-I

(2) Paddles

- The Upper and Lower Paddles are turned to align the paper in the feeding direction.
- The Upper Paddles are turned by the Upper Paddle Motor and Upper Paddle Solenoid.
- The Lower Paddles are turned by the Lower Paddle Motor.

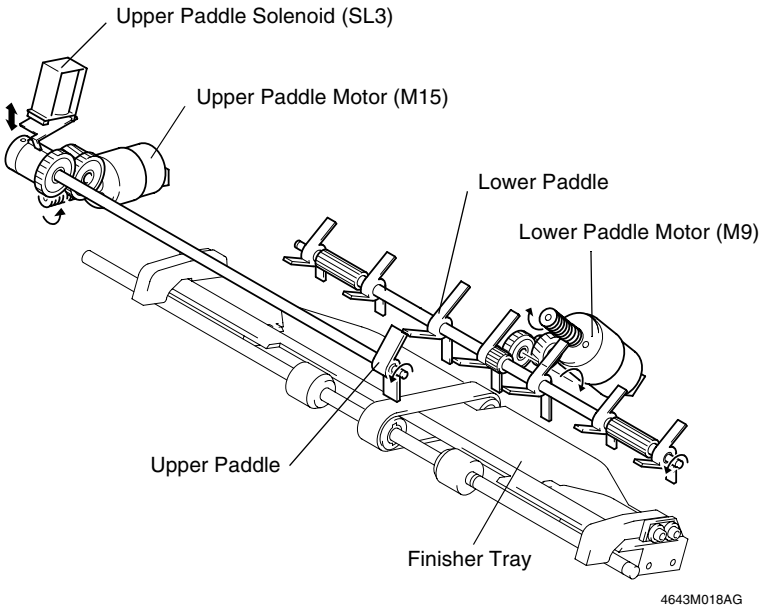

	CONTROL SIGNAL	Energized	Deenergized	WIRING DIAGRAM
M9	PWB-A PJ11A-2	L	H	6-A
M15	PWB-A PJ16A-6	L	H	9-E
SL3	PWB-A PJ16A-4	L	H	8-D

9. STAPLING

9-1. Stapling Mechanism

- The Stapling Unit performs the stapling action.
- When the Stapling Motor turns, the Clinch Arm lowers. Then the Stapler moves up to drive a staple into paper and the staple is formed.
- The following stapling modes are available to choose from.
  FN-107: Rear corner, Front corner, and 2-point side
  FN-108: Rear corner

<FN-107>

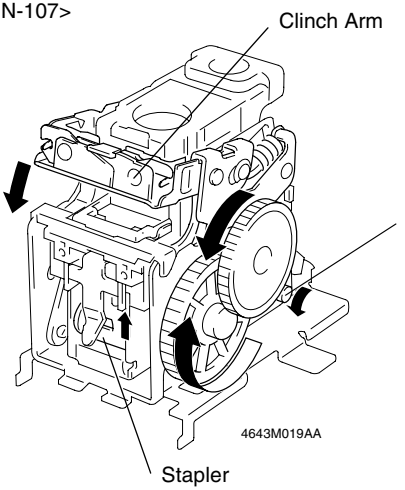

<FN-108>

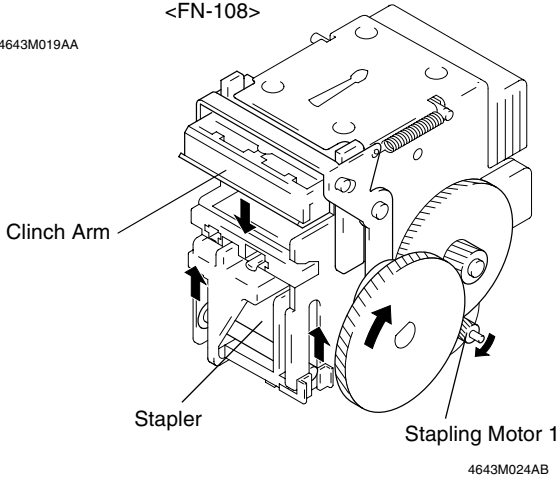

	CONTROL SIGNAL	Energized	Deenergized	WIRING DIAGRAM
Stapling Motor 1	PWB-A PJ7A-5, -6	L	L	4-H
	PWB-A PJ7A-7, -8	H	L	
Stapling Motor 2	PWB-A PJ7A-1, -2	L	L	3-H
	PWB-A PJ7A-3, -4	H	L	

9-2. Stapling Unit Moving Mechanism

- Stapling Units 1 and 2 are moved by the Stapling Unit Moving Motor.
- The Staple Home Position Sensor detects Stapling Units 1 and 2 at their respective home positions. Each of the two Stapling Units is moved with reference to this home position.

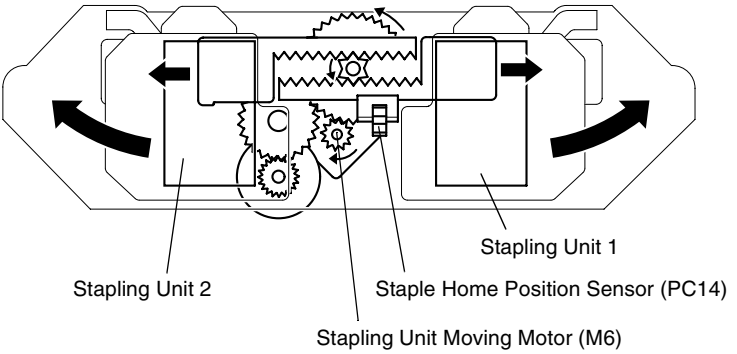

	CONTROL SIGNAL	Energized	Deenergized	WIRING DIAGRAM
M6	PWB-A PJ10A-1~-4	Pulse output		4-A

	CONTROL SIGNAL	Blocked	Unblocked	WIRING DIAGRAM
PC14	PWB-A PJ22A-3	H	L	7-I

9-3. Staple Sheet Empty Detection

- The Staple Empty Detecting Sensor is used to detect whether there is a staple sheet or not in the Staple Cartridge.
- When there are about 20 staples left in the Staple Cartridge, a staple sheet empty condition results and a staple-empty display is given on the control panel of the copier.
- If a staple sheet empty condition is detected during a stapling sequence, that particular sequence is continued until it is completed. A staple empty display is then given.
- After a new Staple Cartridge has been loaded, the Stapling Motor is energized until the Self-Priming Sensor detects loaded staples (L), thereby feeding the staple sheet to the stapling position.

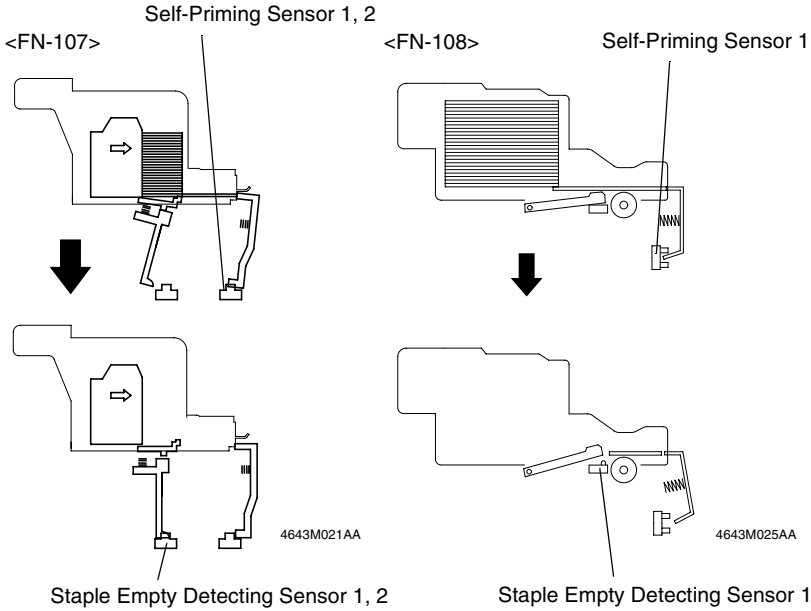

	CONTROL SIGNAL	Blocked	Unblocked	WIRING DIAGRAM
Staple Empty Detecting Sensor 1	PWB-A PJ23A-4	L	H	4-H
Staple Empty Detecting Sensor 2	PWB-A PJ24A-4	L	H	3-H
Self-Priming Sensor 1	PWB-A PJ23A-3	L	H	4-H
Self-Priming Sensor 2	PWB-A PJ24A-3	L	H	3-H

10. ELEVATOR TRAY

- The Elevator Tray moves up or down according to certain conditions.

10-1. Elevator Tray Ascent/Descent Mechanism

- The Elevator Tray is moved up or down by the Elevator Motor that turns forward or backward.

Condition	Elevator Tray	Control
Standby	Stationary at the upper limit position.	The position at which the Elevator Tray Upper Limit Sensor PQ (PWB-D) detects the Elevator Tray.
Paper fed into tray	Lowers to the lower limit position depending on the number of sheets of paper to be fed into the tray.	If the Elevator Tray Upper Limit Sensor PQ (PWB-D) is activated while paper is being fed into the tray, the tray is lowered until the sensor is deactivated.
Paper removed from tray	Moves up to the upper limit position.	If the Elevator Tray Paper Detecting Sensor (PC8) is unblocked when paper is removed from the tray, the tray is raised until the sensor is blocked.
Overload detected	Moves down and then up after paper has been fed into tray.	Lowers the tray for a given period of time, then raises it to the upper limit position. An overcurrent is detected in the Elevator Motor during this period.

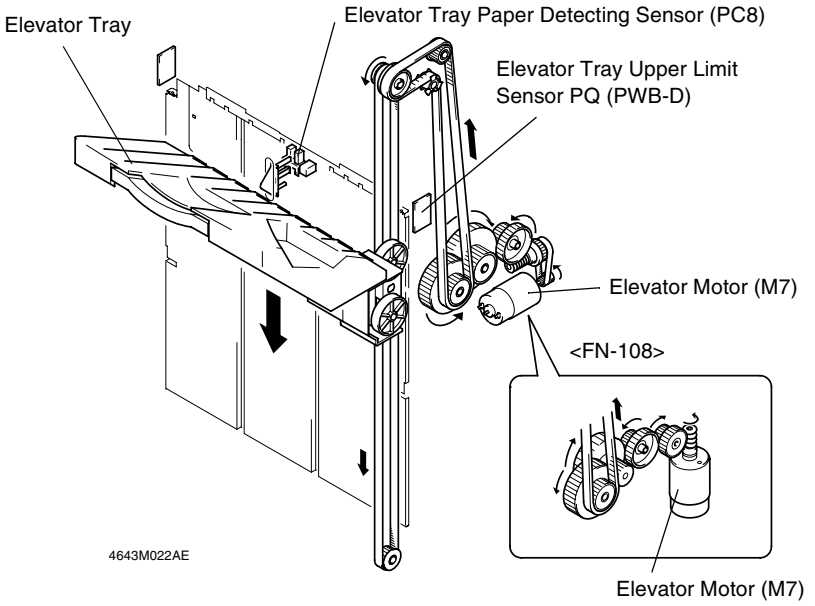

	CONTROL SIGNAL	Ascent	Descent	Stop	WIRING DIAGRAM
M7	PWB-A PJ5A-1	H	L	L	2-D
	PWB-A PJ5A-2	L	H	L	

10-2. Elevator Tray Shifting Mechanism

- When in the Sort mode, the Elevator Tray is moved to the front and rear by a motor to stack copy sets in a sawtooth manner so that each copy set is offset with respect to the others.
- The Shift Home Position Sensor detects the Elevator Tray at its home position.

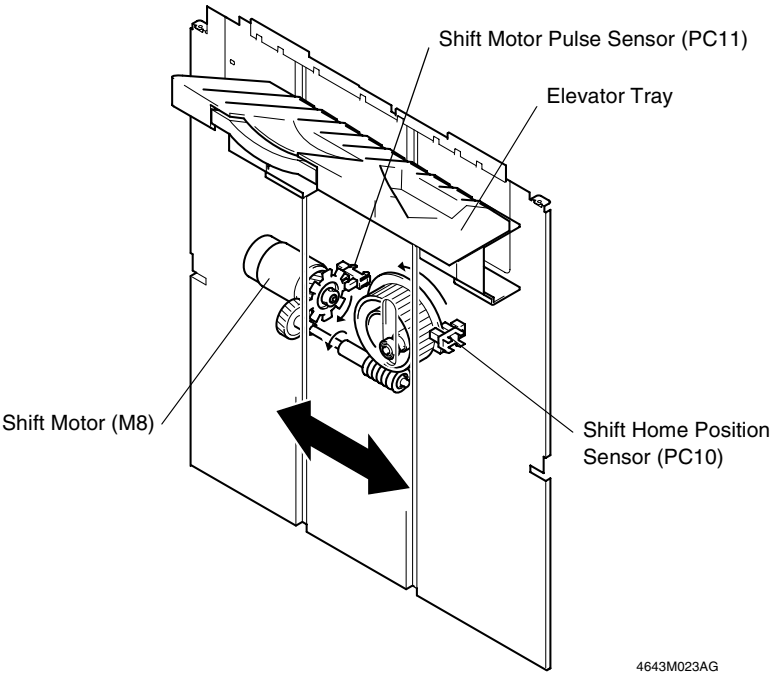

	CONTROL SIGNAL	Energized	Deenergized	WIRING DIAGRAM
M8	PWB-A PJ5A-4	Pulse output	L	2-D

	CONTROL SIGNAL	Blocked	Unblocked	WIRING DIAGRAM
PC10	PWB-A PJ25A-12	H	L	2-H
PC11	PWB-A PJ25A-14	L	H	

11. HORIZONTAL TRANSPORT UNIT

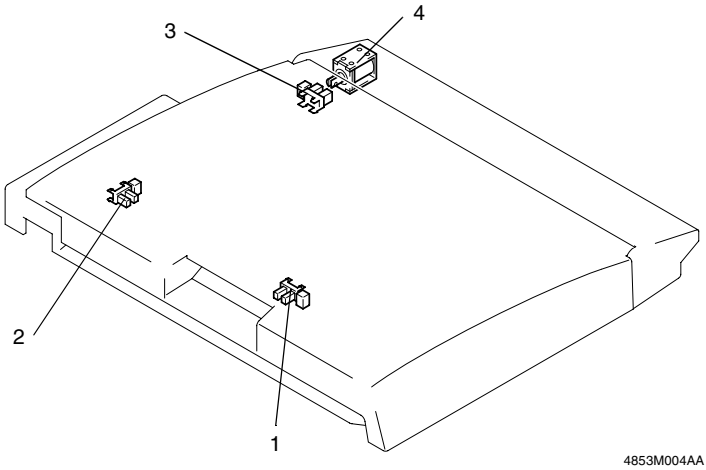

1. Paper Sensor PC1
2. Horizontal Unit Door Sensor PC4
3. Turnover Empty Detecting Sensor PC6
4. Entrance Switching Solenoid SL1

11-1. Paper Transport Mechanism

(1) Paper Path Switching Mechanism

- The paper fed from the copier moves through either one of the two different paper paths.
- A solenoid is used to select the paper path.
  For switchback sequence during 2-sided copying: Solenoid energized
  For transport onto the Finisher: Solenoid deenergized

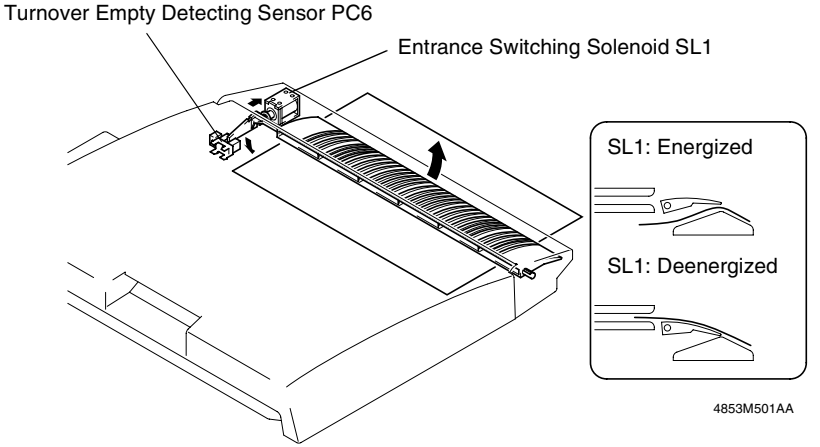

	CONTROL SIGNAL	ON	OFF	WIRING DIAGRAM
SL1	PWB-A PJ15A-2	L	H	9-C

	CONTROL SIGNAL	Blocked	Unblocked	WIRING DIAGRAM
PC6	PWB-A PJ15A-12	L	H	9-D

(2) Finisher Paper Transport Mechanism

- A motor is employed to transport paper onto the Finisher.
- The Paper Sensor functions to detect a sheet of paper present in the Horizontal Transport Unit.

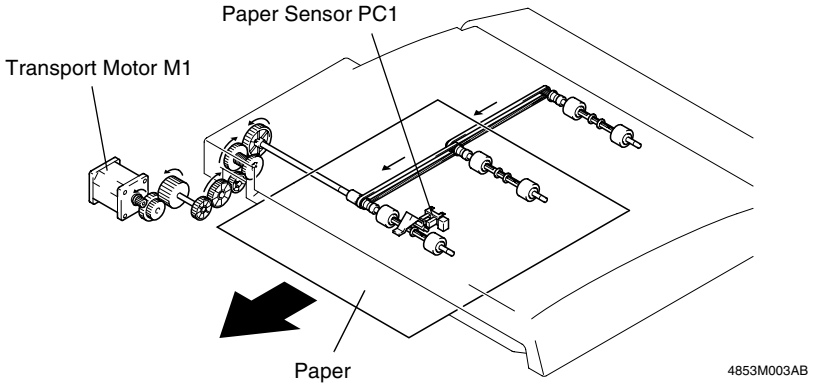

	CONTROL SIGNAL	Blocked	Unblocked	WIRING DIAGRAM
PC1	PWB-A PJ15A-4	L	H	9-C

SWITCHES ON PWB, TEST MODE

1. SWITCHES ON PWB

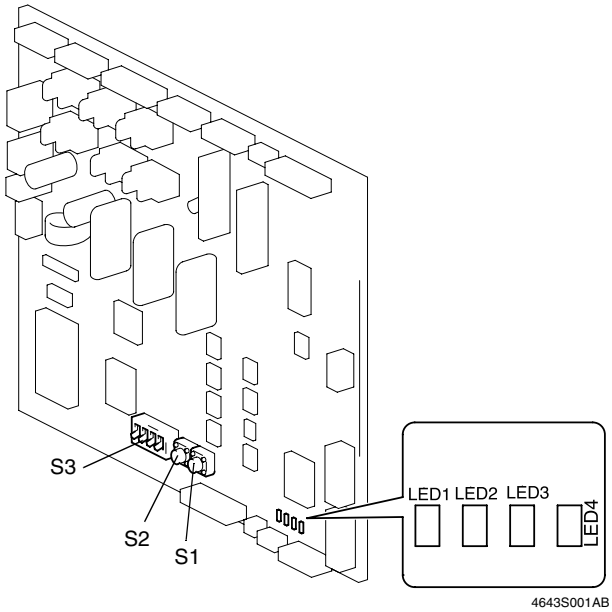

S1	Used to run the Test Mode operation.
S2	
S3	DIP switch used to set the Test Mode operation.
LED1~4	Turn ON or OFF, or blink to indicate a specific condition during Test Mode operations.

2. TEST MODE

2-1. Test Mode Setting Procedure

<Setting Procedure>
1. Turn OFF the Power Switch of the copier.
2. Flip keys of the DIP switch into the ON or OFF position as necessary. (See Table below.)
3. Turn ON the Power Switch of the copier.
4. This sets the Finisher into the corresponding Test Mode operation.

<Resetting Procedure>
- Flip all keys of the DIP switch to their respective initial positions and turn OFF, then ON, the Power Switch of the copier.

2-2. Test Mode Operations

Test Mode Operation	DIP Switch (S3)				LED			
	1	2	3	4	1	2	3	4
Online					❍	❍	❍	●
1st Tray exit	ON				●	❍	❍	❍
Elevator Tray exit		ON			❍	●	❍	❍
Finisher Tray exit	ON	ON			●	●	❍	❍
Shifting operation	ON		ON		●	❍	●	❍
Aligning Plate operation		ON	ON		❍	●	●	❍
Stapling Unit CD movement	ON	ON	ON		●	●	●	❍
Exit Roller/Rolls spacing				ON	❍	❍	❍	●
Storage Roller/Rolls spacing	ON			ON	●	❍	❍	●
Elevator Tray operation		ON		ON	❍	●	❍	●
Hole Punch operation (FN-107)	ON	ON		ON	●	●	❍	●
Hole position selection (FN-107)			ON	ON	❍	❍	●	●
Sensor test	ON		ON	ON	Indicates sensor state			

●: Blinking ❍: OFF

✻ Whenever the Control Board (PWB-A) is to be replaced, take note of the initial positions of all keys of the DIP switch. After the replacement procedure has been completed, be sure to flip all keys of the DIP switch on the new Control Board (PWB-A) to their respective initial positions.

2-3. Operation in Each Test Mode Operation

(1) 1st Tray Exit

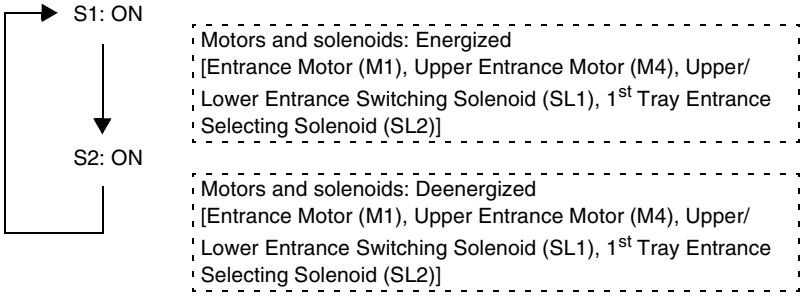

(2) Elevator Tray Exit

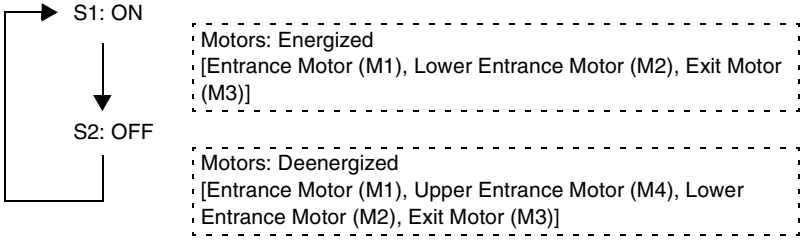

(3) Finisher Tray Exit

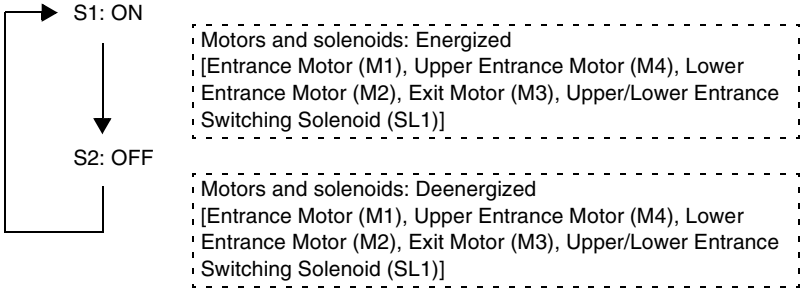

(4) Shifting Operation

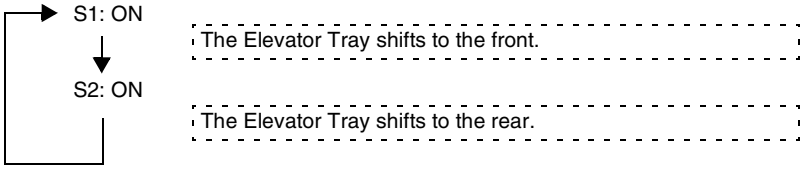

(5) Aligning Plate Operation

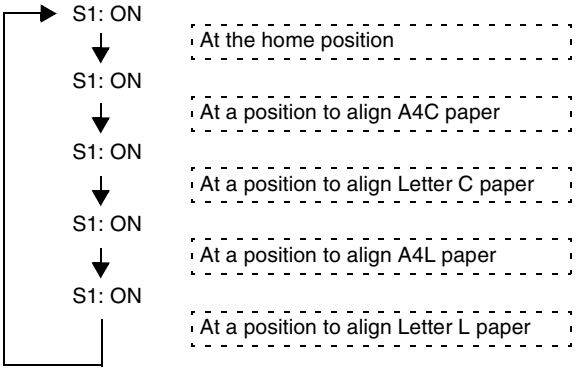

(6) Stapling Unit CD Movement

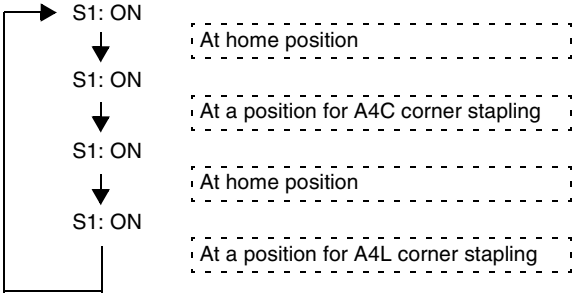

(7) Exit Roller/Rolls Spacing

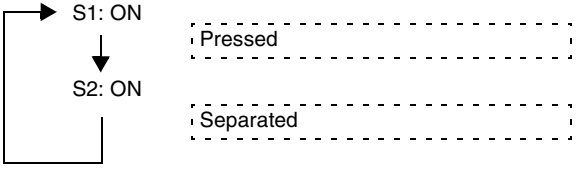

(8) Storage Roller/Rolls Spacing

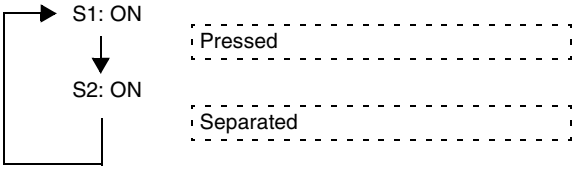

(9) Elevator Tray Operation

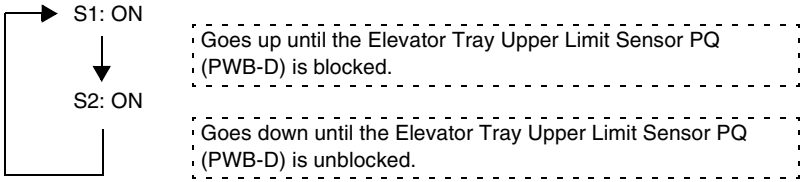

(10) Hole Punch Operation (FN-107)

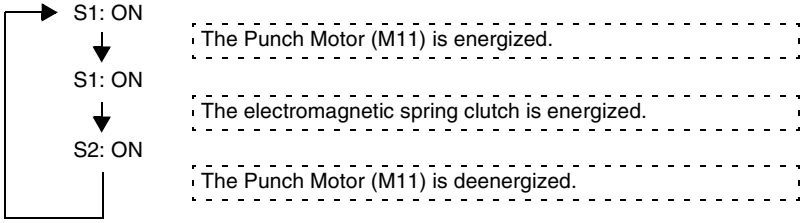

(11) Hole Position Selection (FN-107) U.S.A. and Canada

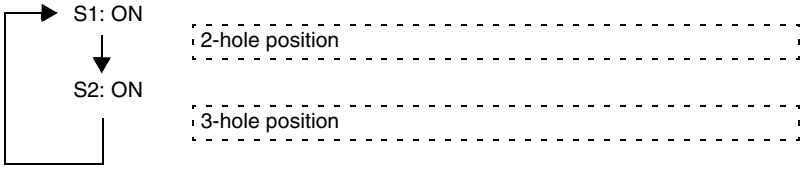

(12) Sensor Test

Sensor	State	LED			
		1	2	3	4
Elevator Tray Upper Limit Sensor PQ (PWB-D)	Unblocked	❍	❍	❍	●
Storage Sensor (PC3)	Blocked	❍	❍	●	❍
Lower Entrance Sensor (PC2)	Blocked	❍	●	❍	❍
Upper Entrance Sensor (PC4)	Blocked	●	❍	❍	❍

●: ON ❍: OFF

DIS/REASSEMBLY, ADJUSTMENT

1. DISASSEMBLY AND REASSEMBLY

1-1. Maintenance Schedule

- To ensure good copies and an extended service life of the Finisher, it is recommended that the maintenance jobs described in this schedule be carried out.

PM Parts	Cleaning (K)	Tools Used for Cleaning	Possible Malfunction	Life Counter
Rollers/Rolls	300	Alcohol, water	Transport failure	Sorter/Finisher
Paddles	300	Alcohol, water	Transport failure	

NOTES

1. *This information is subject to change without notice.*
2. *K = 1,000 copies*
3. *Upon PM service, check the Punch Trash Box and dump trash as may be necessary.*

1-2. Removal of the Exterior Parts

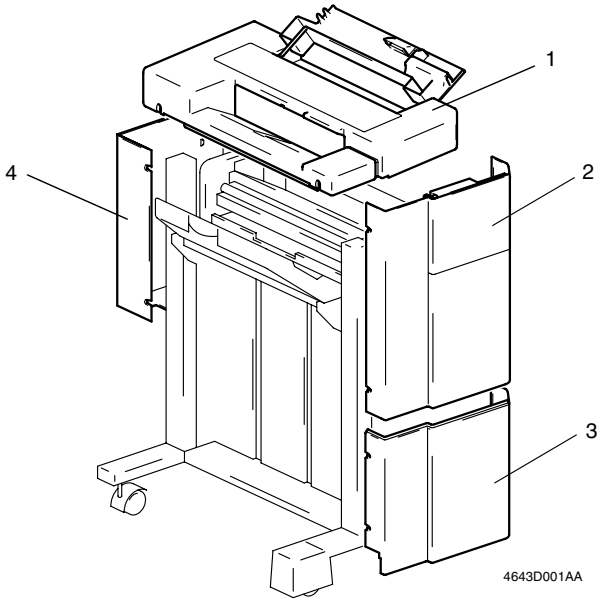

No.	Part Name	Removal Procedure
1	Upper Cover	Open the Misfeed Clearing Cover and remove one screw; then loosen three screws and take off the cover.
2	Upper Front Cover	Loosen four screws and take off the cover.
3	Lower Front Cover	Loosen two screws and take off the cover.
4	Rear Cover	Remove one screw, loosen three screws, and take off the cover.

1-3. Removal of the Punch Unit

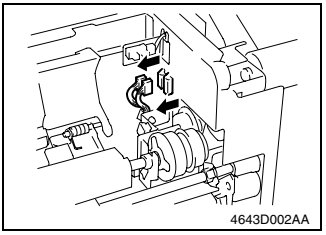

1. Remove the Upper Cover.
2. Unplug two connectors.

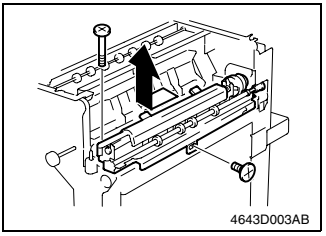

3. Remove two screws and the Punch Unit.

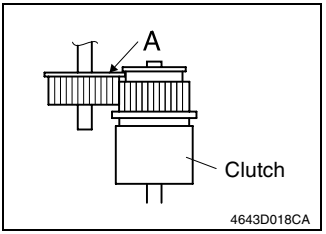

NOTE
When reinstalling the Punch Unit, ensure that part A of the gear on the Finisher fits into the slit in the gear of the Punch Unit.

1-4. Removal of the Stapling Unit

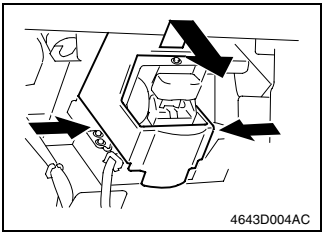

1. Holding both sides of the cover, lift the cover up and take it off.

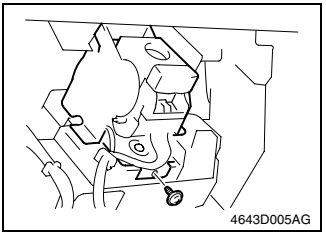

2. Remove one screw and remove the Stapling Unit from the moving cradle.
3. Remove the screw, unplug the connector, and remove the Stapling Unit.

2. ADJUSTMENTS

2-1. Check and Adjustment of the Hole Punch Positions

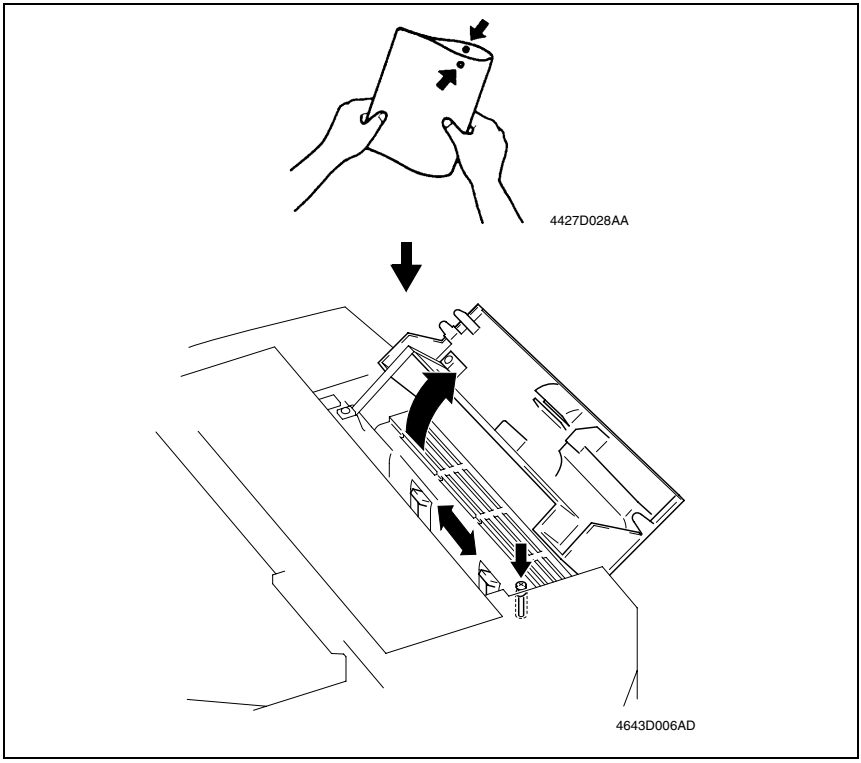

1. Select “Tech. Rep. Mode” → “Machine Adjust” → “Staple/Hole-Punch” → “Hole-Punch” and then press the Start key.
2. Fold the paper fed out in half and check to see if the holes are aligned (deviation should be within 2 mm).
3. If the holes are misaligned, loosen the screw that secure the Punch Unit and slide the Punch Unit as necessary.
4. Run “Hole-Punch” again and check that the holes are aligned.

2-2. Adjustment of the Solenoids

(1) Adjustment of the Upper/Lower Entrance Switching Solenoid (SL1)

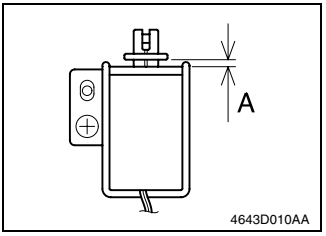

1. Loosen one screw that secures the solenoid in position.
2. Move the solenoid up or down and, when dimension A measures 4.4 mm, tighten the screw.

(2) Adjustment of the 1st Tray Entrance Selecting Solenoid (SL2)

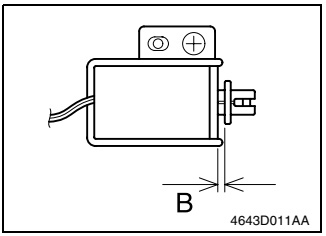

1. Loosen one screw that secures the solenoid in position.
2. Move the solenoid to the right or left and, when dimension B measures 3.6 mm, tighten the screw.

2-3. Timing Belt Tension Adjustment

(1) Adjustment of the Upper Entrance Motor (M4) Timing Belt

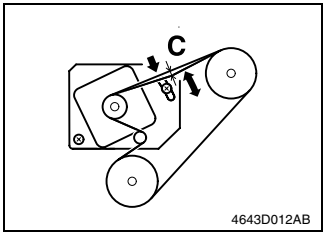

1. Loosen two screws.
2. Move the mounting bracket and, when the belt deflects 4 mm at C, tighten the two screws.

(2) Adjustment of the Lower Entrance Motor (M2) Timing Belt

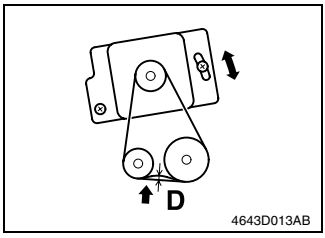

1. Loosen two screws.
2. Move the mounting bracket and, when the belt deflects 2 mm at D, tighten the two screws.

(3) Adjustment of the Exit Motor (M3) Timing Belt

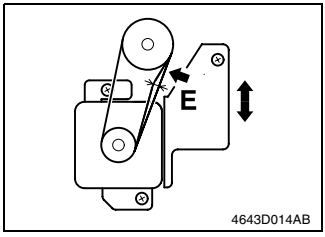

1. Loosen three screws.
2. Move the mounting bracket and, when the belt deflects 3 mm at E, tighten the three screws.

2-4. Adjustment of the Elevator Tray Upper Limit Sensor

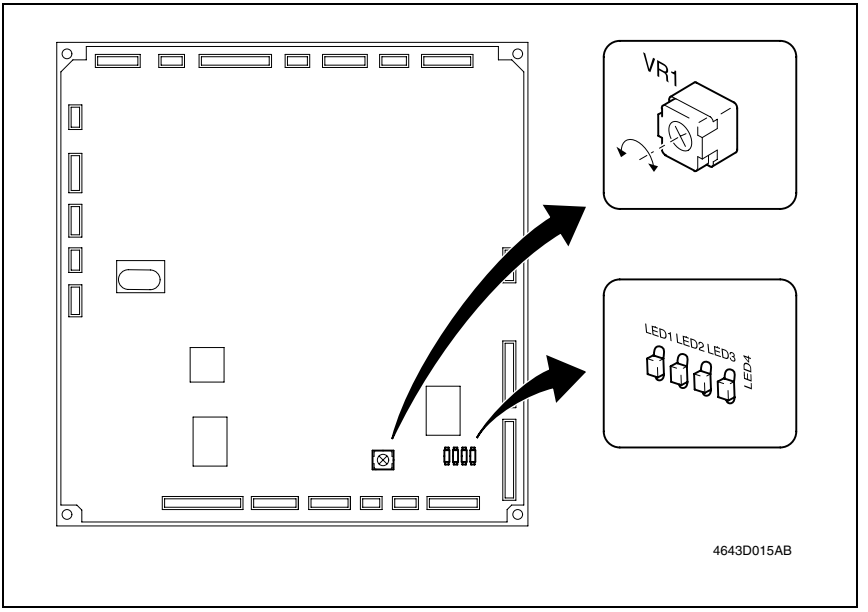

1. Set up the sensor test mode.
2. Turn VR1 on PWB-A fully counterclockwise.
3. Using a sheet of paper, block the Elevator Tray Upper Limit Sensor LED (PWB-C).
4. Check that LED4 on PWB-A turns OFF. If it stays ON, slowly turn VR1 clockwise and stop turning it as soon as the LED turns OFF.

TROUBLESHOOTING

1. SENSOR CHECK

- To permit easy and safe checks of sensors, the sensor input data are checked when the copier and the Finisher are in the standby state (including a misfeed, malfunction, and closure failure condition), thereby determining if correct signals are properly input to the sensors.

1-1. Sensor Check Screen

- The following screens are only typical and port data may look differently on actual copiers.

<Sensors 3>

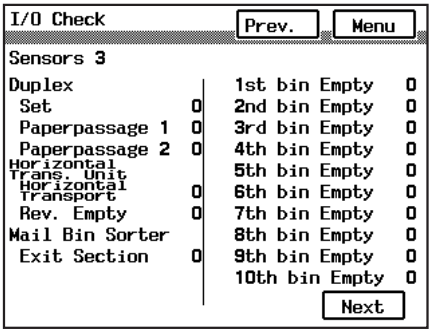

4004P049CA

<Sensors 4>

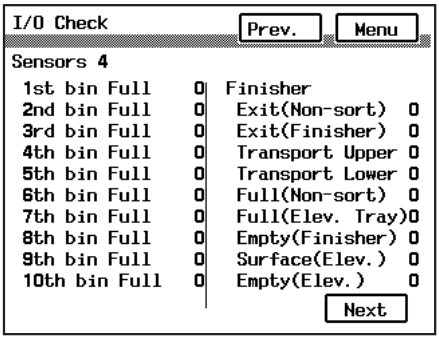

4004P050CA

<Sensors 5>

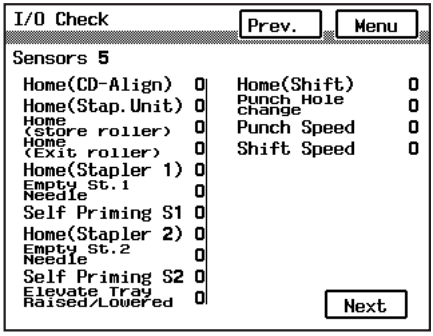

4004P051CA

1-2. Sensor Check List

<Sensors 3>

Symbol	Panel Display	Signal Name	Operation Characteristics/Panel Display		Input Board	IC No.	Port No.	CN/PJ No.
			1	0				
PC1	Horiz. Transport	Paper Sensor	Paper present	Paper not present	Control Board (PWB-A)	IC1	P12	PJ15A-2
PC6	Turnover empty	Turnover Empty Detecting Sensor	Paper present	Paper not present		IC26	PE3	PJ15A-12

<Sensors 4>

Symbol	Panel Display	Signal Name	Operation Characteristics/Panel Display		Input Board	IC No.	Port No.	CN/PJ No.
			1	0				
PC1	Exit (Non-sort)	1st Tray Exit Sensor	Paper present	Paper not present	Control Board (PWB-A)	IC26	PC4	PJ19A-6
PC3	Exit (Finisher)	Storage Sensor	Paper present	Paper not present		IC26	PD0	PJ20A-3
PC4	Transport Upper	Upper Entrance Sensor	Paper present	Paper not present		IC26	PE6	PJ20A-9
PC2	Transport Lower	Lower Entrance Sensor	Paper present	Paper not present		IC26	PE7	PJ19A-8
PC6	Full (Non-sort)	1st Tray Full Detecting Sensor	Blocked	Unblocked		IC26	PC5	PJ19A-3
PC7	Full (Elev. Tray)	Elevator Tray Full Detecting Sensor	Blocked	Unblocked		IC26	PA7	PJ19A-12
PC5	Empty (Finisher)	Finisher Tray Paper Detecting Sensor	Paper present	Paper not present		IC26	PD1	PJ25A-2
PWB-D	Surface (Elev.)	Elevator Tray Upper Limit Sensor PQ	Paper present	Paper not present		IC26	PA6	PJ21A-2
PC8	Empty (Elev.)	Elevator Tray Paper Detecting Sensor	Blocked	Unblocked		IC26	PA5	PJ25A-9

<Sensors 5>

Symbol	Panel Display	Signal Name	Operation Characteristics/Panel Display		Input Board	IC No.	Port No.	CN/PJ No.
			1	0				
PC9	Home (CD-Align)	CD Aligning Home Position Sensor	Blocked	Unblocked	Control Board (PWB-A)	IC26	PD2	PJ25A-6
PC14	Home (Stap. Unit)	Staple Home Position Sensor	Blocked	Unblocked		IC26	PD3	PJ22A-3
PC12	Home (store roller)	Storage Roller Home Position Sensor	Blocked	Unblocked		IC26	PC6	PJ20A-6
PC13	Home (Exit roller)	Exit Rolls Home Position Sensor	Blocked	Unblocked		IC26	PC7	PJ19A-15
–	Home (Stapler 1)	Stapler Home Sensor 1	Unblocked	Blocked		IC1	P71, ANI1	PJ23A-2
–	Empty St. 1 Needle	Staple Empty Detecting Sensor 1	Unblocked	Blocked		IC1	P72, ANI2	PJ23A-4
–	Self Priming S1	Self-Priming Sensor 1	Unblocked	Blocked		IC1	P73, ANI3	PJ23A-3
–	✻Home (Stapler 2)	Stapler Home Sensor 2	Unblocked	Blocked		IC1	P75, ANI5	PJ24A-2
–	✻Empty St. 2 Needle	Staple Empty Detecting Sensor 2	Unblocked	Blocked		IC1	P76, ANI6	PJ24A-4
–	✻Self Priming S2	Self-Priming Sensor 2	Unblocked	Blocked		IC1	P77, ANI7	PJ24A-3
S2 S3	Elevate Tray Raised/ Lowered	Elevator Tray Upper Limit Sensor, Elevator Tray Lower Limit Sensor	ON	OFF		–	–	PJ4A-4
PC10	Home (Shift)	Shift Home Position Sensor	Blocked	Unblocked		IC26	PD4	PJ25A-12
S4	✻Punch Hole change	Hole Punch Position Switch	ON	OFF		IC28	PE2	PJ12A-3
PC15	✻Punch Speed	Punch Motor Pulse Sensor	Unblocked	Blocked		IC1	P21, INTP0	PJ13A-8
PC11	Shift Speed	Shift Motor Pulse Sensor	Unblocked	Blocked		IC1	P24, INTP3	PJ25A-14

✻ : FN-107 only

✻ Punch Hole change: U.S.A. and Canada

1-3. Sensor Check Procedure

1. When a misfeed or malfunction occurs, select “Tech. Rep. Mode” → “State Confirm” → “I/O Check” → “Sensors 4.”
2. Check the input of the sensor that is probably faulty.

[Example] The 1st Tray Exit Sensor is probably responsible for a paper transport misfeed:
<Procedure>

1. Clear the misfeed and reset the misfeed condition.
2. Select “Tech. Rep. Mode” → “State Confirm” → “I/O Check” → “Sensors 4.”
3. Check that the data for “Exit (Non-sort)” on the screen is “0.”
4. Check that the data changes from “0” to “1” when the 1st Tray Exit Sensor (PC1) is blocked.

1: PC1 is operational; 0: PC1 is faulty

2. MISFEED DETECTION AND TROUBLESHOOTING PROCEDURES

2-1. Misfeed Detecting Sensor Layout

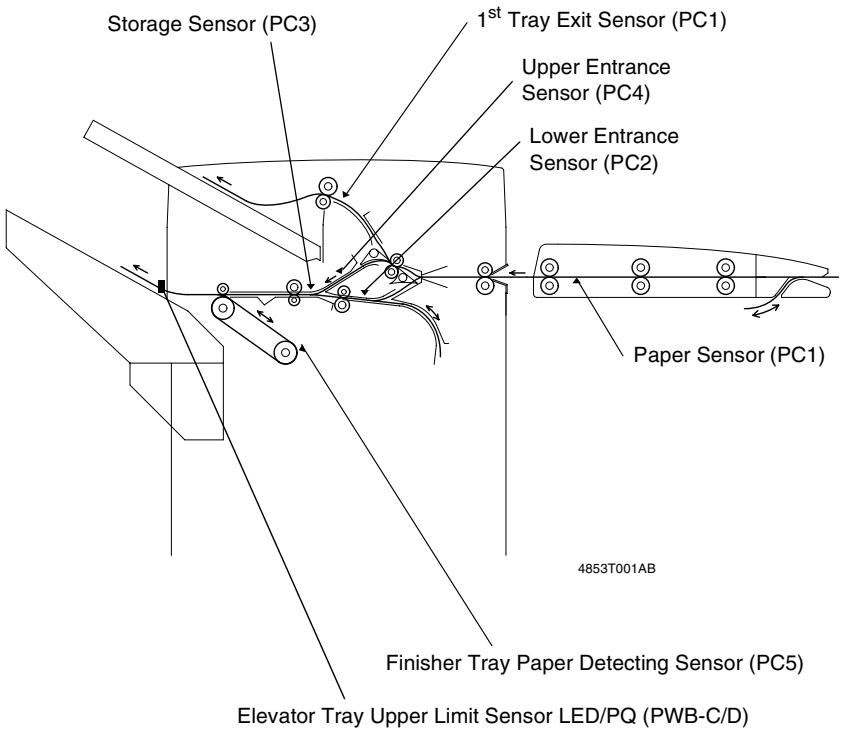

2-2. Misfeed Detection

- When a misfeed occurs, the Touch Panel of the copier gives a message and shows the locations where the misfeed has occurred and paper is located.

Misfeed location	Blinking
Paper location	ON

- The misfeed display can be reset by unlocking and sliding the Finisher away from the copier, and the sliding the Finisher back against the copier.

Type	Detection Timing
Transport misfeed	• The Paper Sensor (PC1) of the Horizontal Transport Unit is not blocked even after the lapse of a given period of time after the leading edge of the paper has unblocked the Paper Exit Sensor of the copier. • The Paper Sensor (PC1) of the Horizontal Transport Unit is not unblocked even after the lapse of a given period of time after the leading edge of the paper has blocked the sensor. • The 1st Tray Exit Sensor (PC1) is not blocked even after the lapse of a given period of time after the leading edge of the paper has blocked the Paper Sensor (PC1) of the Horizontal Transport Unit. • The Upper Entrance Sensor (PC4) is not blocked even after the lapse of a given period of time after the leading edge of the paper has blocked the Paper Sensor (PC1) of the Horizontal Transport Unit. • The Lower Entrance Sensor (PC2) is not blocked even after the lapse of a given period of time after the leading edge of the paper has blocked the Paper Sensor (PC1) of the Horizontal Transport Unit.
Misfeed at the 1st Tray exit	• The 1st Tray Exit Sensor (PC1) is not unblocked even after the lapse of a given period of time after it has been blocked.
Misfeed at the Elevator Tray exit	• The Storage Sensor (PC3) is not unblocked even after the lapse of a given period of time after it has been blocked.
Paper stack exit misfeed	The Finisher Tray Paper Detecting Sensor (PC5) remains activated when a copy stack, which has been stapled together, is fed out.
Staple misfeed	The Staple Home Position Sensor (PC14) is not blocked even after the lapse of a given period of time after the Stapling Motor has started turning forward, and the sensor is blocked within a given period of time after the Stapling Motor has thereafter started turning backward.

2-3. Misfeed Troubleshooting Procedures

(1) Transport misfeed

Step	Check	Result	Action
1	Paper meets specifications.	NO	Change paper.
2	Paper is curled, wavy, or damp.	YES	Change paper. Instruct user in how to store paper.
3	Foreign object on paper path, or dirty or deformed paper path.	YES	Clean or change.
4	Dirty, deformed, or worn roller or roll.	YES	Clean or change.
5	Entrance Motor (M1) turns after Start key has been pressed.	NO	Change M1 or PWB-A.
6	Upper Entrance Motor (M4) turns after Start key has been pressed.	NO	Change M4 or PWB-A.
7	Lower Entrance Motor (M2) turns after Start key has been pressed.	NO	Change M2 or PWB-A.
8	Paper Sensor (PC1) I/O Check: Horiz. Transport of Sensors	NO	Correct actuator. Change PC1.
9	Upper Entrance Sensor (PC4) I/O Check: Transport Upper of Sensors	NO	Correct actuator. Change PC4.
10	Lower Entrance Sensor (PC2) I/O Check: Transport Lower of Sensors	YES	Change PWB-A.
		NO	Correct actuator. Change PC2.
11	Storage Sensor (PC3) I/O Check: Exit (Finisher) of Sensors	YES	Change PWB-A.
		NO	Correct actuator. Change PC3.

(2) Misfeed at the 1st Tray exit

Step	Check	Result	Action
1	Paper meets specifications.	NO	Change paper.
2	Paper is curled, wavy, or damp.	YES	Change paper. Instruct user in how to store paper.
3	Foreign object on paper path, or dirty or deformed paper path.	YES	Clean or change.
4	Dirty, deformed, or worn roller or roll.	YES	Clean or change.
5	1st Tray Exit Sensor (PC1) I/O Check: Exit (Non-sort) of Sensors	YES	Change PWB-A.
		NO	Correct actuator. Change PC1.

(3) Misfeed at the Elevator Tray exit

Step	Check	Result	Action
1	Paper meets specifications.	NO	Change paper.
2	Paper is curled, wavy, or damp.	YES	Change paper. Instruct user in how to store paper.
3	Foreign object on paper path, or dirty or deformed paper path.	YES	Clean or change.
4	Dirty, deformed, or worn roller or roll.	YES	Clean or change.
5	Exit Motor (M3) turns after Start key has been pressed.	NO	Change M3 or PWB-A.
6	Storage Sensor (PC3) I/O Check: Exit (Finisher) of Sensors	YES	Change PWB-A.
		NO	Change PC3.

(4) Paper stack exit misfeed

Step	Check	Result	Action
1	Paper meets specifications.	NO	Change paper.
2	Paper is curled, wavy, or damp.	YES	Change paper. Instruct user in how to store paper.
3	Foreign object on paper path, or dirty or deformed paper path.	YES	Clean or change.
4	Dirty, deformed, or worn roller or roll.	YES	Clean or change.
5	Exit Motor (M3) turns after Start key has been pressed.	NO	Change M3 or PWB-A.
6	Finisher Tray Paper Detecting Sensor (PC5) I/O Check: Empty (Finisher) of Sensors	YES	Change PWB-A.
		NO	Change PC5.

(5) Staple misfeed

Step	Check	Result	Action
1	Stapling Motor is overloaded.	YES	Check drive couplings.
		NO	Change Stapling Unit or PWB-A.

3. MALFUNCTION DETECTION AND TROUBLE-SHOOTING PROCEDURES

3-1. Malfunction Detection

- Any of the following operation faults can be detected and the corresponding malfunction code is displayed on the copier Touch Panel.
- The malfunction detection can be reset by opening and closing the Front Door of the copier.

Malfunction Code	Description	Detection Timing
C0B20	Stapling Unit Moving Motor (M6) drive malfunction	The Staple Home Position Sensor (PC14) does not go HIGH even after the lapse of a given period of time after M6 has been energized (to return the Stapling Unit to its home position).
C0B30	CD Aligning Motor (M5) drive malfunction	The CD Aligning Home Position Sensor (PC9) does not go LOW even after the lapse of a given period of time after M5 has been energized (to return the Aligning Plate to its home position).
C0B48	Exit Roller/Rolls Spacing Motor (M13) drive malfunction	The Exit Rolls Home Position Sensor (PC13) does not go HIGH even after the lapse of a given period of time after M13 has been energized (to start spacing/pressure sequence).
C0B4A	Storage Roller/Rolls Spacing Motor (M12) drive malfunction	The Storage Roller Home Position Sensor (PC12) does not go HIGH even after the lapse of a given period of time after M12 has been energized (to start spacing/pressure sequence).
C0B50	Stapling Motor 1 drive malfunction	Stapling Motor 1 is not deenergized even after the lapse of a given period of time after it has been energized (to start a stapling sequence).
✻C0B54	Stapling Motor 2 drive malfunction	Stapling Motor 2 is not deenergized even after the lapse of a given period of time after it has been energized (to start a stapling sequence).
✻C0B73	Punch Motor (M11) drive malfunction	The Punch Motor Pulse Sensor (PC15) does not go from LOW to HIGH, or vice versa, even after the lapse of a given period of time after M11 has been energized.
✻C0B78	Hole Position Selector Motor (M14) drive malfunction (U.S.A. and Canada)	The Hole Punch Position Switch (S4) is not actuated or deactuated even after the lapse of a given period of time after M14 has been energized.
C0B80	Shift Motor (M8) drive malfunction	• The Shift Home Position Sensor (PC10) does not go HIGH even after the lapse of a given period of time after M8 has been energized (to start returning the Elevator Tray to its home position). • The Shift Home Position Sensor (PC10) does not go LOW even after the lapse of a given period of time after M8 has been energized (to start moving the Elevator Tray for job offset).
C0BA0	Elevator Motor (M7) drive malfunction	• The Elevator Tray Upper Limit Sensor PQ (PWB-D) is not activated even after the lapse of a given period of time after M7 has been energized (to start raising the Elevator Tray). • The Elevator Tray Upper Limit Switch (S2) or Elevator Tray Lower Limit Switch (S3) is actuated after M7 has been energized.

✻ : FN-107 only

3-2. Malfunction Troubleshooting Procedures

(1) C0B20

Step	Check	Result	Action
1	Staple Home Position Sensor (PC14) I/O Check: Home (Stap. Unit) of Port Signals	NO	Change PC14.
2	Turn OFF the Power Switch, move the Stapling Unit out of its home position, and turn ON the Power Switch. Drive of the Stapling Unit Moving Motor (M6) at this time	YES	Change PWB-A.
		NO	Change M6 or PWB-A.

(2) C0B30

Step	Check	Result	Action
1	CD Aligning Home Position Sensor (PC9) I/O Check: Home (CD Align) of Port Signals	NO	Change PC9.
2	Turn OFF the Power Switch, move the Aligning Plate out of its home position, and turn ON the Power Switch. Drive of the CD aligning Motor (M6) at this time	YES	Change PWB-A.
		NO	Change M5 or PWB-A.

(3) C0B48

Step	Check	Result	Action
1	Exit Rolls Home Position Sensor (PC13) I/O Check: Home (Exit roller) of Port Signals	NO	Change PC13.
2	Drive of the Exit Roller/Rolls Spacing Motor (M13) when the Power Switch is turned OFF and ON	YES	Change PWB-A.
		NO	Change M13 or PWB-A.

(4) C0B4A

Step	Check	Result	Action
1	Storage Roller Home Position Sensor (PC12) I/O Check: Home (Store roller) of Port Signals	NO	Change PC12.
2	Drive of the Storage Roller/Rolls Spacing Motor (M12) when the Power Switch is turned OFF and ON	YES	Change PWB-A.
		NO	Change M12 or PWB-A.

(5) C0B50

Step	Check	Result	Action
1	Stapling Motor 1 is overloaded.	YES	Check drive coupling.
		NO	Change Stapling Unit 1 or PWB-A.

(6) C0B54 (FN-107)

Step	Check	Result	Action
1	Stapling Motor 2 is overloaded.	YES	Check drive coupling.
		NO	Change Stapling Unit 2 or PWB-A.

(7) C0B73 (FN-107)

Step	Check	Result	Action
1	Punch Motor Pulse Sensor (PC15) I/O Check: Punch Speed of Port Signals	NO	Change PC15.
2	Punch Motor (M11) operation: The voltage across PJ6A-2 on PWB-A and GND change from DC24V to DC0V after the Start key has been pressed in the Punch mode.	YES	Change M11.
		NO	Change PWB-A.

(8) C0B78 (FN-107): U.S.A. and Canada

Step	Check	Result	Action
1	Drive of the Hole Position Selector Motor (M14) when the Punch Hole positions are changed	YES	Change Punch Unit.
		NO	Change Punch Unit or PWB-A.

(9) C0B80

Step	Check	Result	Action
1	Shift Home Position Sensor (PC10) I/O Check: Home (Shift) of Port Signals	NO	Change PC10.
2	Shift Motor Pulse Sensor (PC11) I/O Check: Shift Speed of Port Signals	NO	Change PC11.
3	Shift Motor (M8) operation: The voltage across PJ5A-4 on PWB-A and GND change from LOW to HIGH after the Start key has been pressed in the Sort mode.	YES	Change M8.
		NO	Change PWB-A.

(10) C0BA0

Step	Check	Result	Action
1	Elevator Tray Upper Limit Sensor PQ (PWB-D) I/O Check: Surface (Elev.) of Sensors	NO	Change PWB-C or PWB-D.
2	Elevator Tray Upper Limit Switch (S2) I/O Check: Elevate Tray Raised/Lowered of Port Signals	NO	Change S2.
3	Elevator Tray Lower Limit Switch (S3) I/O Check: Elevate Tray Raised/Lowered of Port Signals	NO	Change S3.
4	Elevator Motor (M7) operation: The voltage across PJ5A-1 on PWB-A and GND (when the Elevator Tray goes down) and that across PJ5A-2 on PWB-A and GND (when the Elevator Tray goes up) goes from LOW to HIGH after the Start key has been pressed in the Sort mode.	YES	Change M7.
		NO	Change PWB-A.

1. Non-Sort Mode (feeding one copy out)

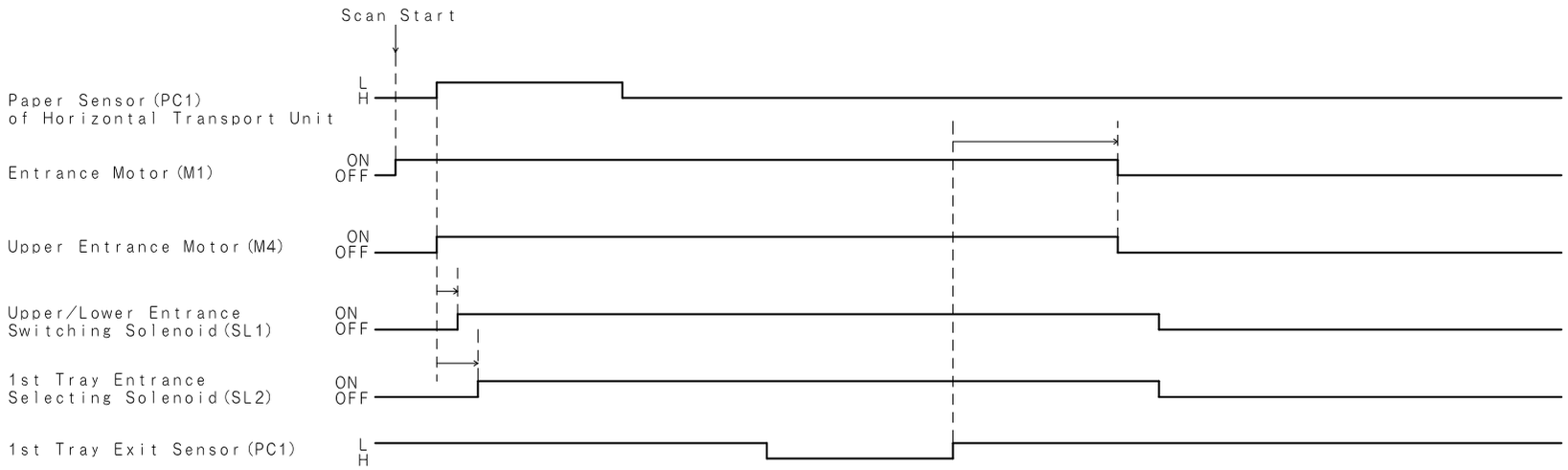

2. Sort Mode (feeding two copy sets out, made from two originals)

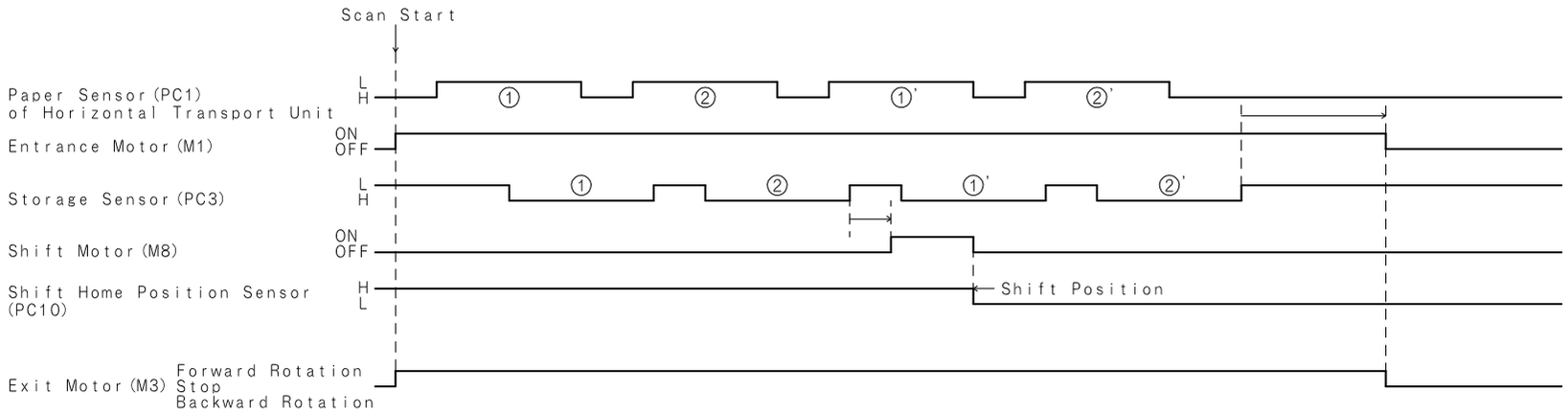

3. Sort Staple Mode (rear corner stapling, A4L, feeding two copy sets out, made from two originals)

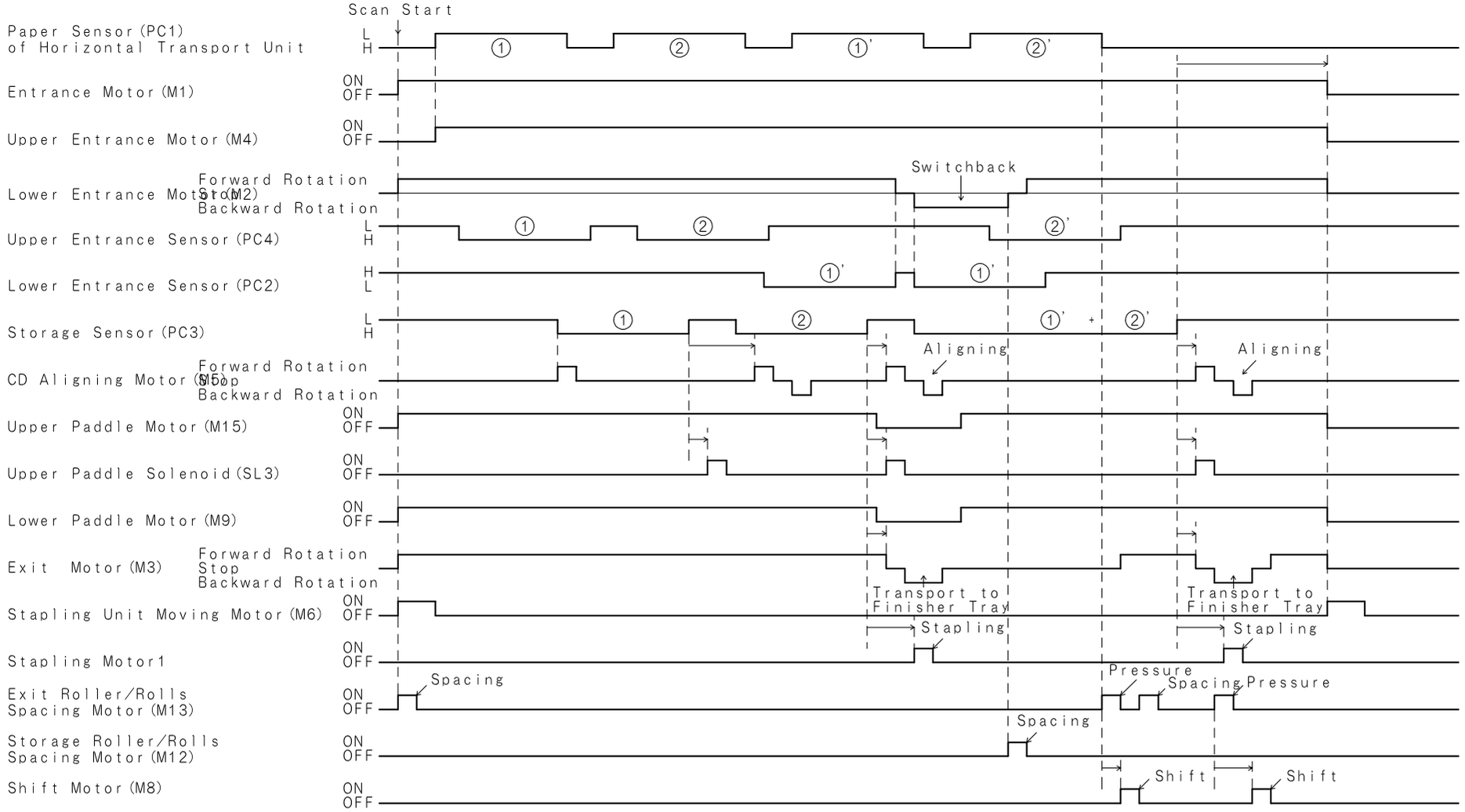

4. Non-Sort/Hole Punch Mode (feeding one copy out) : FN-105

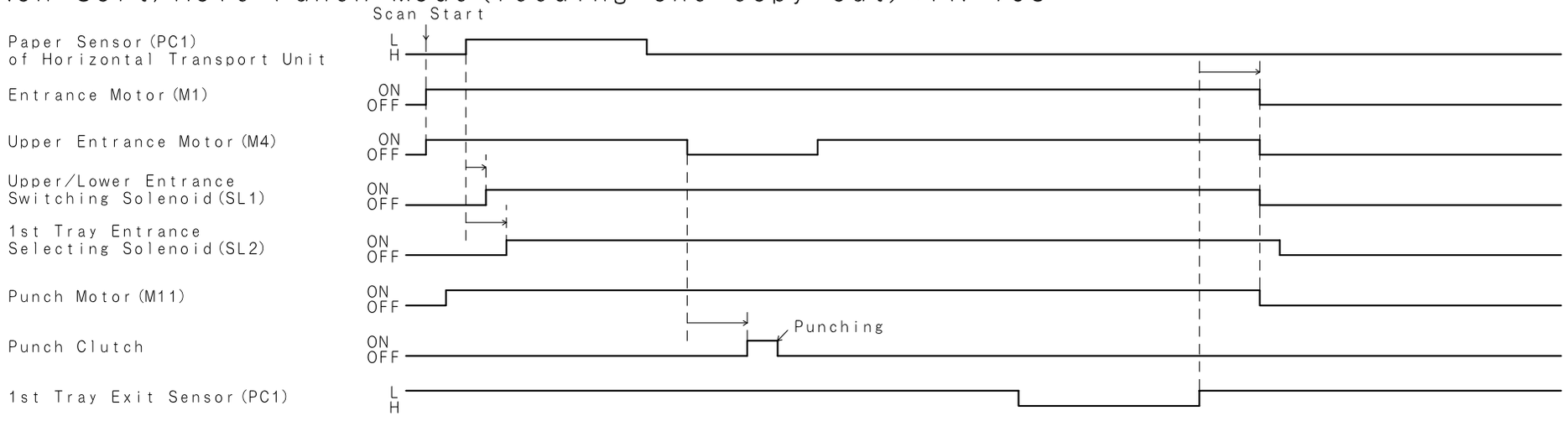

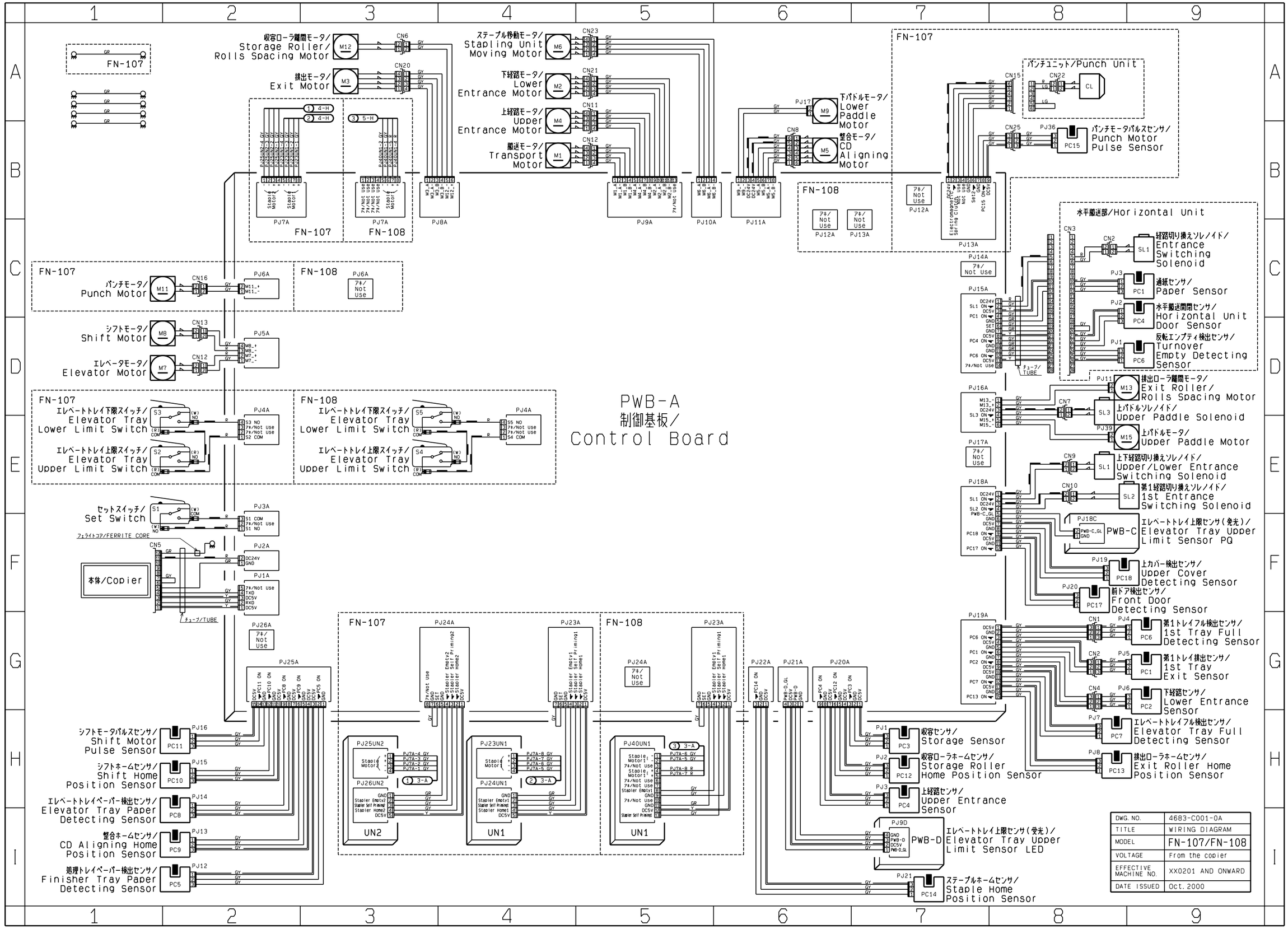

DWG. NO.	4683-C001-0A
TITLE	WIRING DIAGRAM
MODEL	FN-107/FN-108
VOLTAGE	From the copier
EFFECTIVE MACHINE NO.	XX0201 AND ONWARD
DATE ISSUED	Oct. 2000

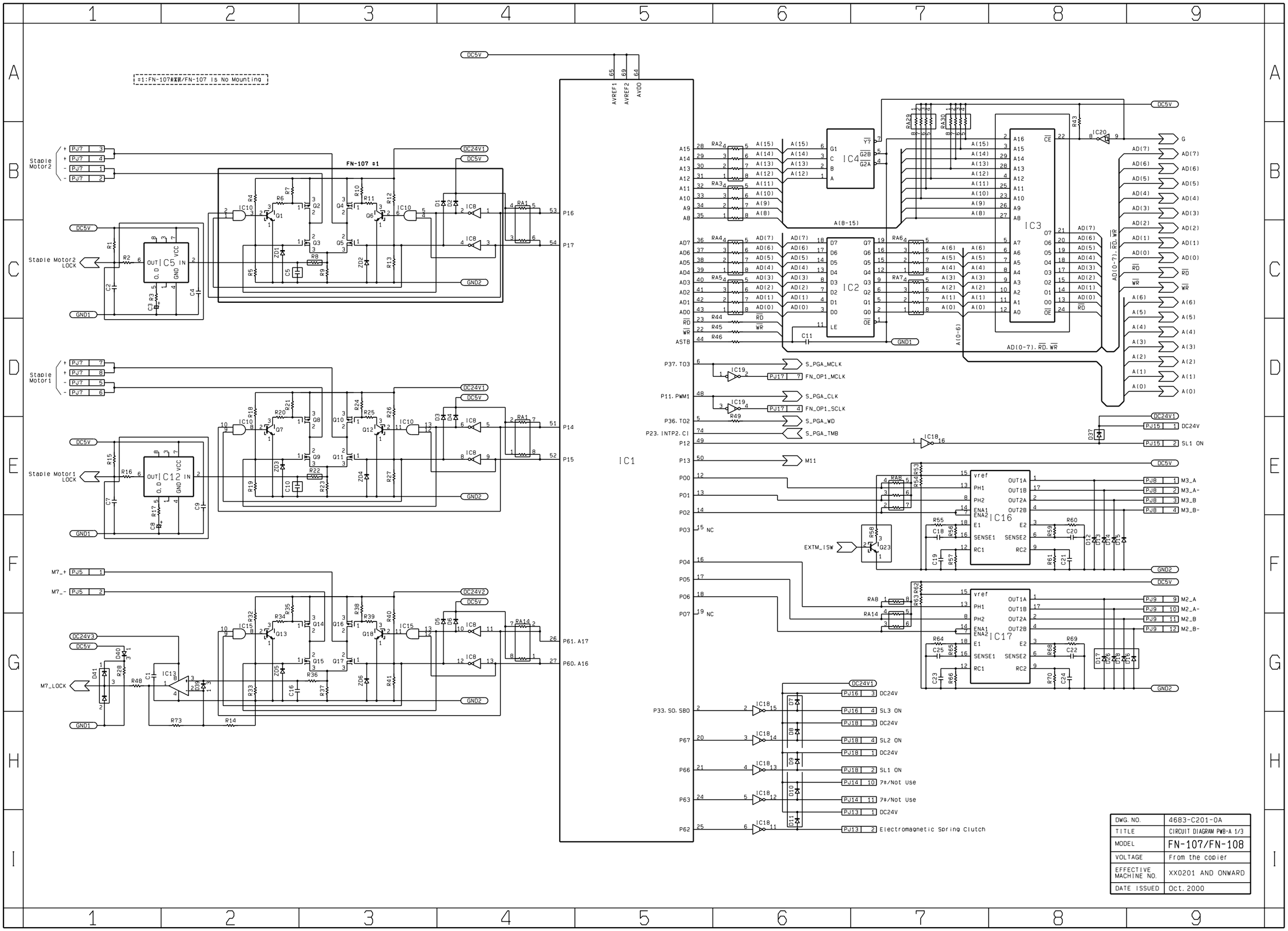

DWG. NO.	4683-C201-0A
TITLE	CIRCUIT DIAGRAM PWB-A 1/3
MODEL	FN-107/FN-108
VOLTAGE	From the copier
EFFECTIVE MACHINE NO.	XX0201 AND ONWARD
DATE ISSUED	Oct. 2000

※1:FN-107※※/FN-107 IS No Mounting

DWG. NO.	4683-C202-0A
TITLE	CIRCUIT DIAGRAM PWB-A 2/3
MODEL	FN-107/FN-108
VOLTAGE	From the copier
EFFECTIVE MACHINE NO.	XX0201 AND ONWARD
DATE ISSUED	Oct. 2000

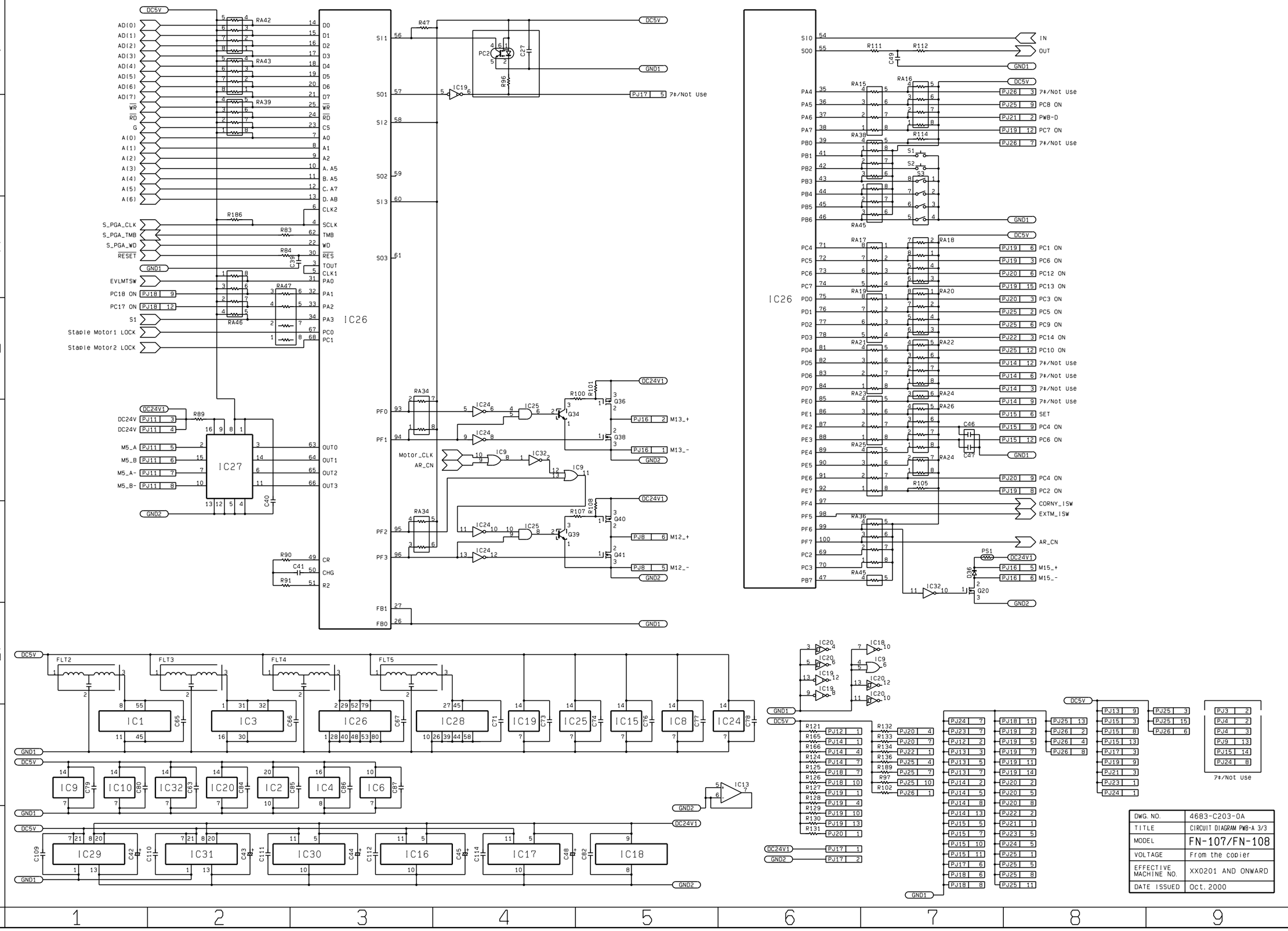

DWG. NO.	4683-C203-0A
TITLE	CIRCUIT DIAGRAM PWB-A 3/3
MODEL	FN-107/FN-108
VOLTAGE	From the copier
EFFECTIVE MACHINE NO.	XX0201 AND ONWARD
DATE ISSUED	Oct. 2000