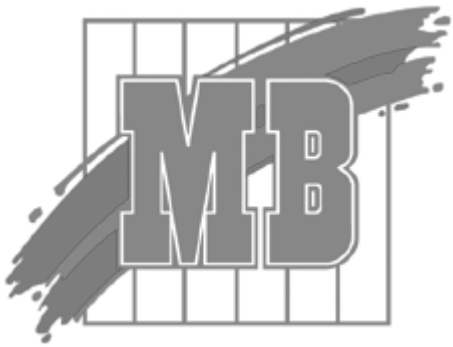

MB 7815/7820
Parts Catalog

PREFACE

1. The part numbers listed in Parts Manual are those which were assigned to the parts making up the machine at the time machine was originally introduced onto the market.

2. Parts whose INDEX numbers are shown white against a black background in the illustration are those to be used in only certain market areas. These part numbers are given in the lower half part of the list section. Check the SFIX No. listed in SFIX CHART on page II to find which part number is applicable to your own area.

3. Parts whose INDEX numbers are shown black against a white background in the illustration are those to be used in all market areas. These parts are listed on the upper half part of the list section.

4. If "NS" follows a part number given in the list section, it indicates that we do not keep a stock of the part. The part is not required for ordinary service jobs, either.

5. If "RP" is shown in the REC column of the list section, it indicates that the part is functionally important.

6. In the exploded views in this Parts Manual the parts (Screws & Washes, etc...) which are indicated with a "four-digit" numbers are listed in numerical order in the section "SCREWS AND WASHERS". Please check these "four-digit" numbers with the part numbers ("ten-digit" numbers) which should be used for ordering the part.

7. All part numbers consist of "ten-digit" which should all be quoted when ordering a part. The price of parts can be obtained by referring to the "Parts Price List" which is separately issued.

8. All infomation contained in this parts manual is subject to change.

SFIX CHART

SFIX No.	COUNTRY	VOLTAGE	FREQUENCY (Hz)	PAPER SIZE	SFIX No.	COUNTRY	VOLTAGE	FREQUENCY (Hz)	PAPER SIZE
011	CF2001 JAPAN	100V	50/60HZ	METRIC	303	CF1501 TAIWAN	110V	60HZ	METRIC
201	CF1501 EUROPE/ KOREA/EXCEPT JAPAN & USA/CANADA	220-240V	50/60HZ	METRIC	304	CF1501 SAUDIARABIA	120-127V	60HZ	METRIC/INCH
204	CF1501 PHILIPPINE	220-240V	50/60HZ	INCH	311	CF2001 USA/CANADA	120-127V	60HZ	INCH
211	CF2001 EUROPE/ KOREA/EXCEPT JAPAN & USA/CANADA	220-240V	50/60HZ	METRIC	313	CF2001 TAIWAN	110V	60HZ	METRIC
214	CF2001 PHILIPPINE	220-240V	50/60HZ	INCH	314	CF2001 SAUDIARABIA	120-127V	60HZ	METRIC/INCH
301	CF1501 USA/CANADA	120-127V	60HZ	INCH					

CONTENTS

1. HOUSING 1
2. IU LOCK & PAPER SELECT 3
3. HOPPER SECTION 5
4. ELECTRICAL COMPONENTS (A) 7
5. ELECTRICAL COMPONENTS (B) 9
6. PAPER EXIT SECTION 11
7. MANUAL FEED SECTION 13
8. PAPER TRANSPORT SECTION 15
9. PC DRIVE SECTION 17
10. TRANSPORT DRIVE SECTION 19
11. FUSING DRIVE SECTION 21
12. TRANSFER BELT UNIT 23
13. FUSING SECTION ..... CRU 25
14. TRANSFER FRAME ..... CRU 27
15. LED UNIT 29
16. PAPER DETECT SECTION 31
17. CASSETTE HOUSING 33
18. CASSETTE DRIVE SECTION 35
19. MULTIPURPOSE CASSETTE 37
20. UNIVERSAL CASSETTE 39
21. HOUSING ..... Scanner 41
22. DRIVE SECTION (A) ..... Scanner 43
23. DRIVE SECTION (B) ..... Scanner 45
24. ELECTRICAL COMPONENTS ..... Scanner 47
25. DUPLEX UNIT AD-14 49
26. WIRING ACCESSORIES AND JIGS 51
27. SCREWS AND WASHERS 53
28. NUMERICAL INDEX 55

DECEMBER 2000

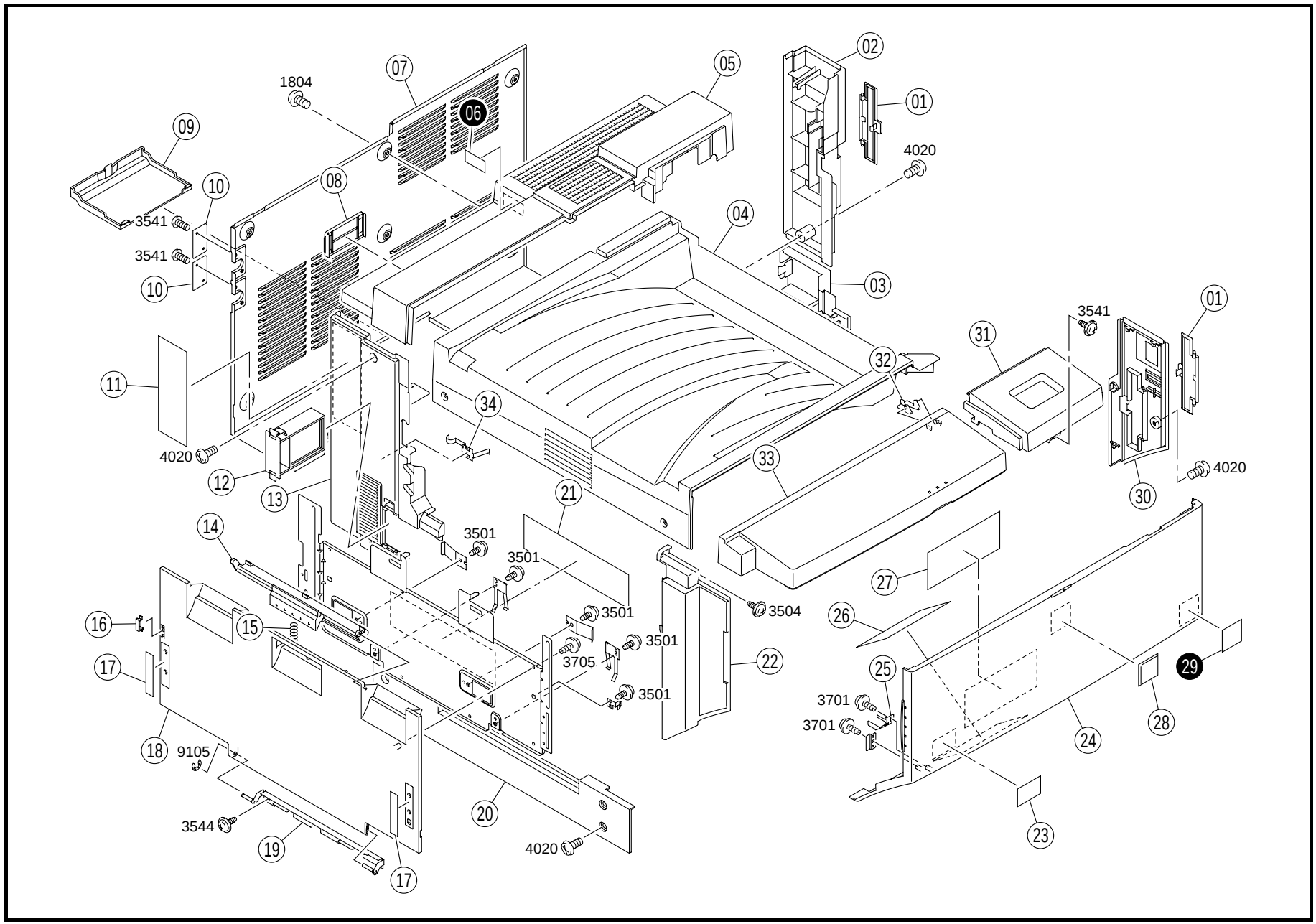
1804
07
06
05
02
01
4020
09
10
08
04
3541
3541
10
03
3541
01
31
32
11
34
4020
12
13
33
30
4020
21
14
3501
3501
27
3501
3504
26
16
15
3501
3705
22
29
17
25
3501
3701
3701
28
24
18
9105
20
3544
19
4020
23
17

INDEX	PART NO.	PART NAME	REC	QTY
01	4004-1035-01	LID		2
02	4004-1008-03	COVER		1
03	4004-1033-03	COVER		1
04	4004-1028-04	COVER		1
05	4004-1006-04	COVER		1
07	4004-1009-03	COVER		1
08	9384-2310-41	COVER		1
09	4004-1038-01	COVER		1
10	1144-1048-01	COVER PLATE		2
11	4004-7405-01	LABEL		1
12	4004-0347-01	OZONE FILTER	RP	1
13	4004-1007-02	COVER		1
14	4004-1013-03	HANDLE		1
15	4004-1014-01	PRESSURE SPRING		1
16	1164-1033-01	COVER		1
17	4004-1011-01	LABEL		2
18	4004-1005-03	COVER		1
19	4004-1015-02	HOLDER ASSY		1

INDEX	PART NO.	PART NAME	REC	QTY
20	4004-2101-03	RAIL		1
21	4004-7303-02	LABEL		1
22	4004-1027-02	COVER		1
23	4004-7333-01	LABEL		1
24	4004-1001-03	FRONT COVER		1
25	4004-1031-03	GUIDE PLATE		1
26	4004-7302-03	LABEL		1
27	4004-7304-02	LABEL		1
28	4002-7305-01	LABEL		1
30	4004-1004-03	COVER		1
31	4004-1003-02	COVER		1
32	4004-1032-02	LEVER		1
33	4004-1002-03	COVER		1
34	4004-1068-01	PLATE SPRING		1

INDEX	PART NO.	PART NAME		REC	QTY	SFIX
06	4004-7403-02	LABEL	240V.1.2A		1	201, 204, 211, 214
06	4004-7407-01	LABEL	127V.2.6A		1	011, 301, 303, 304, 311, 313, 314
29	4004-7301-01	LABEL	CF2001		1	011, 211, 214, 311, 313, 314
29	4004-7322-01	LABEL	CF1501		1	201, 204, 301, 303, 304

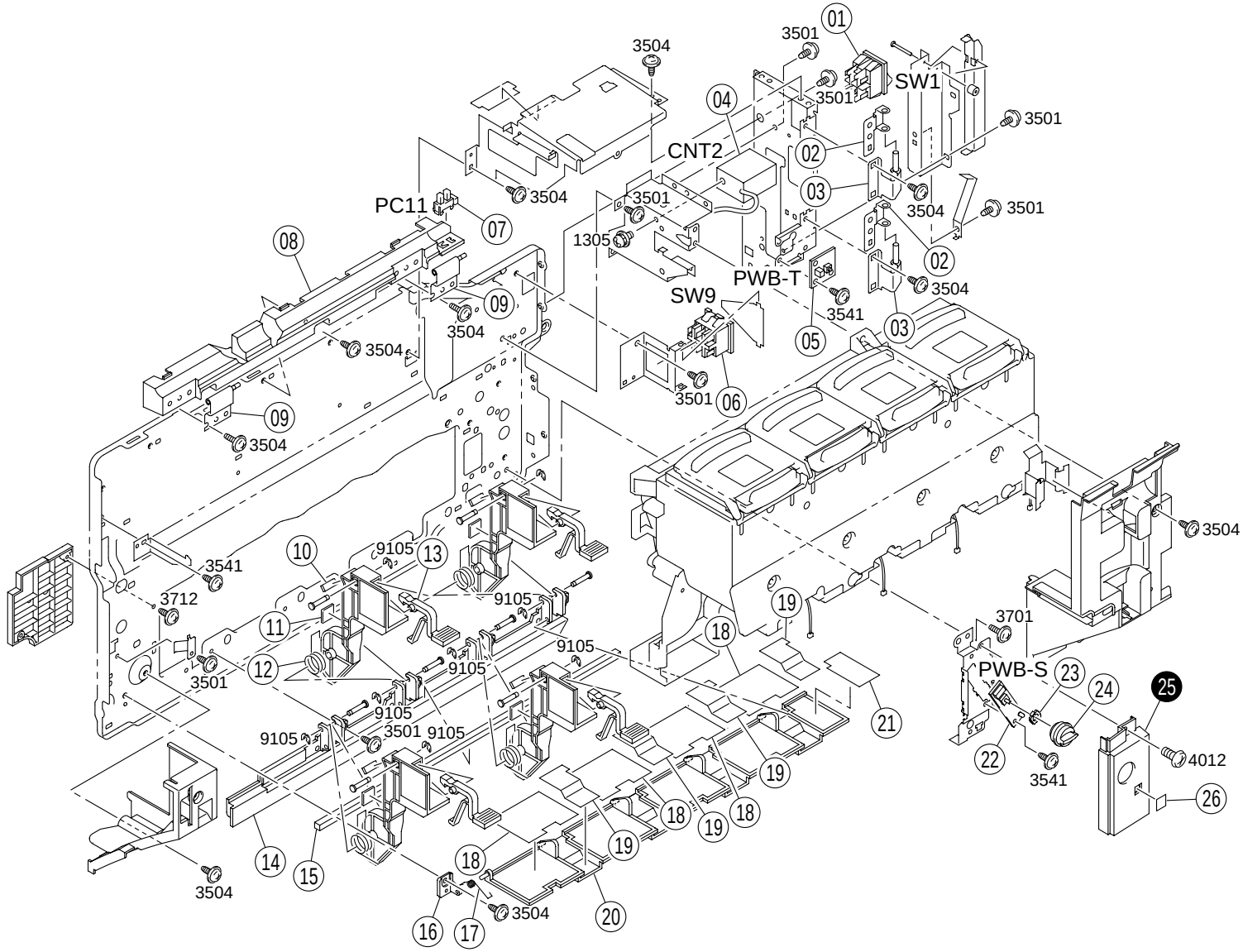
01
3501
3504
SW1
3501
04
3501
CNT2
02
03
3504
3501
PC11
07
3504
3501
1305
08
02
PWB-T
3504
SW9
3541
09
3504
05
03
3504
3501
06
09
3504
3504
10
9105
13
3541
3712
9105
19
3701
11
18
9105
12
9105
PWB-S
23
24
25
3501
9105
21
9105
3501
9105
22
4012
19
3541
26
18
19
18
19
14
15
18
3504
3504
16
17
20

INDEX	PART NO.	PART NAME	REC	QTY
01	9332-5810-11	SWITCH MAIN (SW1)		1
02	4004-1024-01	HINGE		2
03	4004-1025-03	HINGE		2
04	9323-1410-11	COUNTER (CNT2)		1
05	4004-0109-01	PWB ASSY (PWB-T)		1
06	9331-1810-21	MICRO SWITCH (SW9)		1
07	9335-1410-31	PHOTO INTERRUPTER (PC11)		1
08	4004-1053-02	COVER		1
09	4004-1023-02	HOLDER		2
10	4004-1829-02	CUSHION		4
11	4004-1842-01	CUSHION		4
12	4004-1838-02	TORSION SPRING		4
13	4004-1826-03	PAWL		4
14	4004-1837-03	COVER		1
15	4004-1836-02	SEAL		1
16	4004-1823-01	HOLDER		1
17	4004-1832-01	TORSION SPRING		1
18	4004-1834-02	SEAL		4
19	4004-1833-03	SEAL		4
20	4004-1831-01	PLATE		1
21	4004-1835-02	SEAL		1
22	4498-0102-01	PW BOARD-S (PWB-S)	RP	1
23	4108-3079-01	HOLDER		1
24	4004-3073-02	KNOB		1
26	4658-1003-01	LABEL		1

INDEX	PART NO.	PART NAME	REC	QTY	SFIX
25	4004-3072-03	COVER		1	201, 204, 211, 214, 301, 303, 304, 311, 313, 314
25	4004-3074-01	COVER		1	011

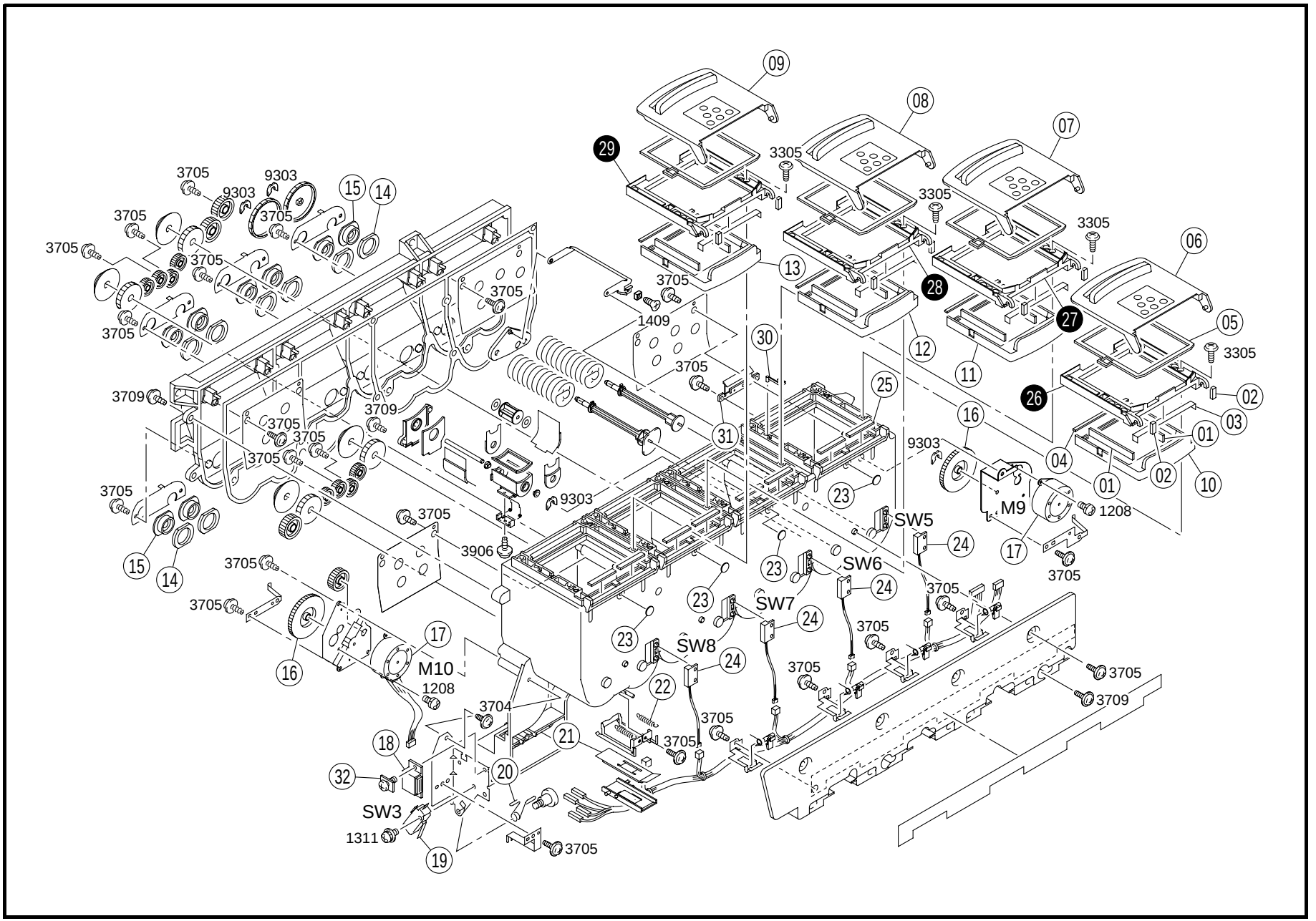
09
08
07
06
05
29
28
27
26
13
12
11
30
31
25
16
04
01
02
03
10
17
23
24
SW5
SW6
SW7
SW8
M9
M10
1208
1409
3305
3705
9303
3709
3906
3704
1311
SW3
15
14
18
19
20
21
22
32

INDEX	PART NO.	PART NAME		REC	QTY
01	4004-5383-01	SEAL			4
02	4004-5404-01	SEAL			8
03	4004-5403-02	SEAL			4
04	4004-5387-01	SEAL			8
05	4004-5378-02	SEAL			4
06	4004-5394-02	LID	BLACK		1
07	4004-5393-02	LID	CYAN		1
08	4004-5392-02	LID	MAGENTA		1
09	4004-5372-02	LID	YELLOW		1
10	4004-5391-03	SLIDER	BLACK		1
11	4004-5390-03	SLIDER	CYAN		1
12	4004-5389-03	SLIDER	MAGENTA		1
13	4004-5371-03	SLIDER	YELLOW		1
14	1144-5313-02	SPONGE			8
15	1144-5318-01	BUSHING			8
16	4004-5351-01	GEAR			2
17	9314-1910-11	MOTOR	(M9.10)		2
18	1500-2640-04	MAGNET CATCH			1

INDEX	PART NO.	PART NAME		REC	QTY
19	9331-2710-11	MICRO SWITCH	(SW3)		1
20	4004-1041-01	TORSION SPRING			1
21	4004-5349-01	SEAL			4
22	4004-5348-02	TENSION SPRING			8
23	0966-5298-01	SEAL			4
24	9334-2610-11	REED SWITCH	(SW5-8)		4
25	4004-5405-02	SEAL			8
30	4004-5382-01	LEVER			4
31	4004-5379-02	HOOK			4
32	1053-1324-01	TAPPING SCREW			2

INDEX	PART NO.	PART NAME		REC	QTY	SFIX
26	4004-5397-02	HOLDER	BLACK		1	011, 201, 204, 211, 214, 303, 304, 313, 314
26	4004-5402-02	HOLDER	BLACK		1	301, 311
27	4004-5396-02	HOLDER	CYAN		1	011, 201, 204, 211, 214, 303, 304, 313, 314
27	4004-5401-02	HOLDER	CYAN		1	301, 311
28	4004-5395-02	HOLDER	MAGENTA		1	011, 201, 204, 211, 214, 303, 304, 313, 314
28	4004-5399-02	HOLDER	MAGENTA		1	301, 311
29	4004-5380-02	HOLDER	YELLOW		1	011, 201, 204, 211, 214, 303, 304, 313, 314
29	4004-5398-02	HOLDER	YELLOW		1	301, 311

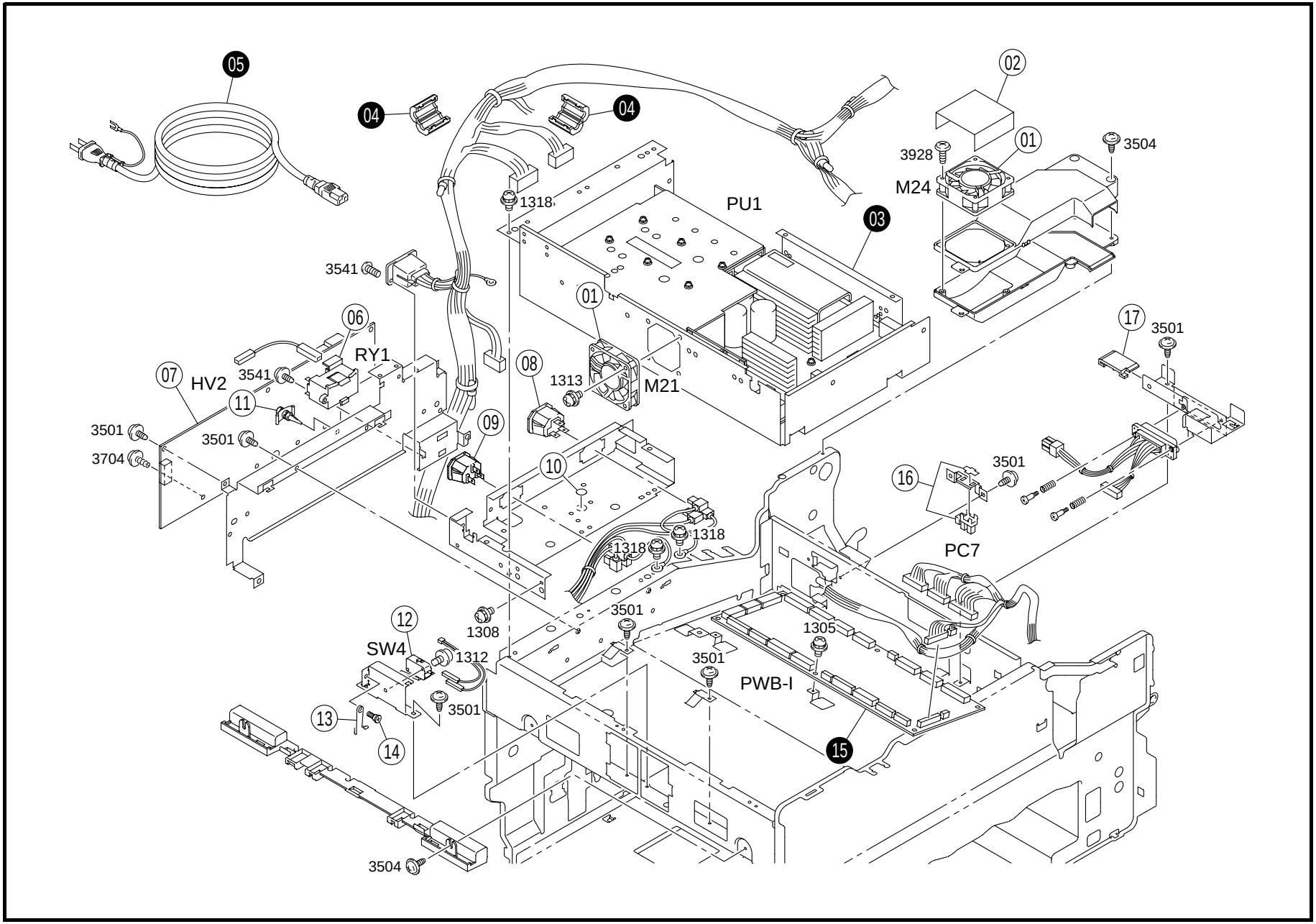
05
04
04
02
3928
01
3504
M24
1318
PU1
03
3541
01
17
3501
06
RY1
07
HV2
3541
08
1313
M21
11
09
3501
3501
3704
10
16
3501
1318
1318
PC7
3501
12
1308
1305
SW4
1312
3501
PWB-I
13
3501
14
15
3504

INDEX	PART NO.	PART NAME			REC	QTY	INDEX	PART NO.	PART NAME	REC	QTY
01	9313-1000-61	FAN MOTOR		(M21.24)		2					
02	4004-2163-01	FILTER				1					
06	9341-2000-11	DC POWER RELAY		(RY1)		1					
07	4004-6203-01	HV TRANSFORMER		(HV2)		1					
08	9383-5000-11	JACK				1					
09	9383-2510-21	HOLDER				1					
10	1500-2320-02	LABEL EARTH				1					
11	9384-1621-21	PWB SUPPORT 6.4H				3					
12	9331-2710-11	MICRO SWITCH		(SW4)		1					
13	4004-2239-03	TORSION SPRING				1					
14	1100-1330-07	SHOULDER SCREW				1					
16	4002-0902-01	PHOTO INTERRUPTER		(PC7)		1					
17	4004-3592-01	GUIDE				1					

INDEX	PART NO.	PART NAME			REC	QTY	SFIX
03	4004-6207-02	POWER SUPPLY		(PU1)		1	011, 301, 303, 304, 311, 313, 314
03	4004-6208-02	POWER SUPPLY		(PU1)		1	201, 204, 211, 214
04	9326-1910-21	FERRITE CORE				2	201, 211, 303, 313
05	9381-4810-31	POWER CORD				1	011
05	9381-4810-61	POWER CORD				1	204, 214
05	9381-4911-01	POWER CORD				1	301, 303, 304, 311, 313, 314
15	4004-0101-04	PWB ASSY	CF2001	(PWB-I)	RP	1	011, 214, 311, 314
15	4004-0117-04	PWB ASSY	CF1501	(PWB-I)	RP	1	204, 301, 304
15	4004-0118-01	PWB ASSY	CF2001	(PWB-I)	RP	1	211, 313
15	4004-0119-01	PWB ASSY	CF1501	(PWB-I)	RP	1	201, 303

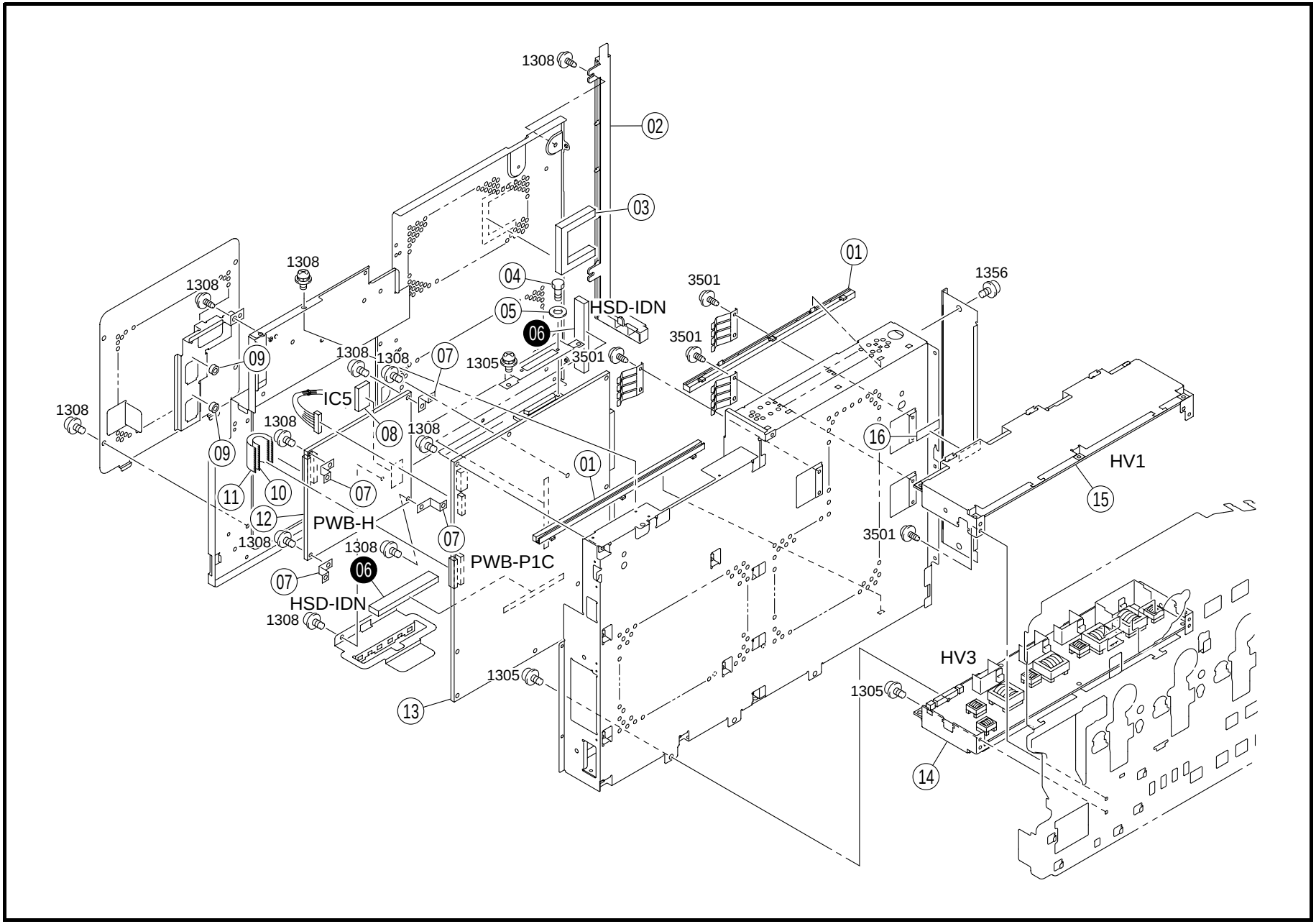
1308
02
03
01
3501
1356
04
05
HSD-IDN
06
3501
1308
1308
07
1305
3501
09
IC5
1308
1308
08
1308
09
16
HV1
01
11
10
07
15
12
PWB-H
3501
1308
1308
07
PWB-P1C
07
06
HSD-IDN
1308
HV3
1305
1305
13
14

INDEX	PART NO.	PART NAME	REC	QTY	INDEX	PART NO.	PART NAME	REC	QTY
01	4004-2203-01	GUIDE		2					
02	4004-1016-02	COVER		1					
03	4004-2263-01	SEAL		1					
04	4005-6758-01	CONNECTOR ACCESSORY		2					
05	1200-1232-02	WASHER		2					
07	4004-2206-01	BRACKET		4					
08	9367-4510-31	IC (IC5)		1					
09	1154-4670-01	CUSHION		2					
10	4004-6846-01	WIRE HARNESS ASSY		1					
11	4004-6845-01	WIRE HARNESS ASSY		1					
12	4004-0110-03	PWB ASSY (PWB-H)	RP	1					
13	4004-0111-03	PWB ASSY (PWB-PIC)	RP	1					
14	4004-0322-02	PWB-HV (HV3)		1					
15	4004-0323-02	PWB-HV (HV1)		1					
16	1129-7303-01	LABEL		1					

INDEX	PART NO.	PART NAME	REC	QTY	SFIX
06	4004-6056-01	PWB ASSY (HSD-IDN)	RP	2	211, 214, 311, 313, 314

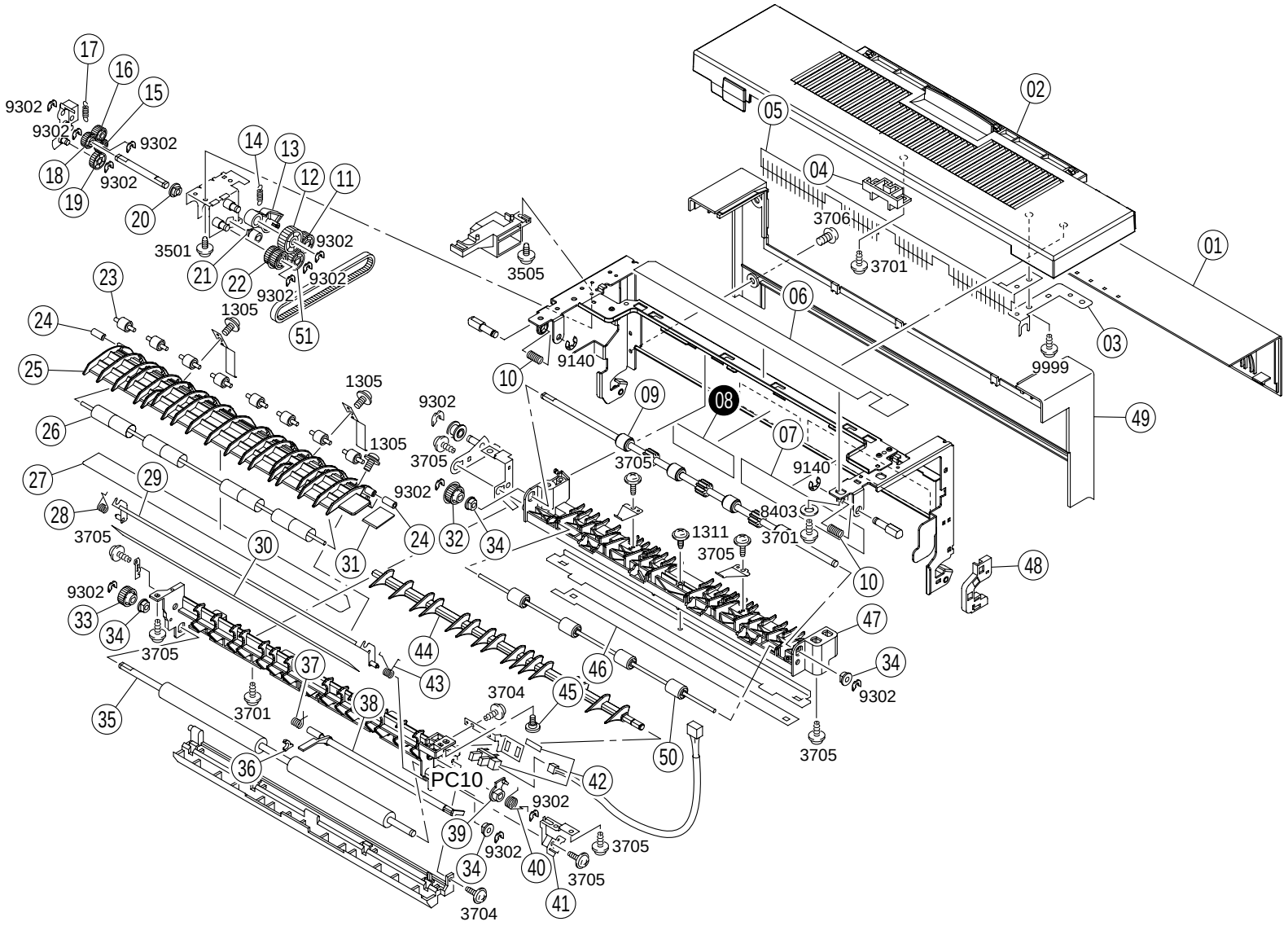
PC10

INDEX	PART NO.	PART NAME	REC	QTY
01	4004-5947-02	COVER		1
02	4004-5943-05	COVER		1
03	4004-5972-01	EARTH GROUND		1
04	4004-5979-01	BUSHING		1
05	4004-5916-03	NEUTRALIZING BRUSH		1
06	4004-5997-02	SEAL		1
07	4004-7305-02	LABEL		1
09	4004-5901-04	ROLLER		1
10	4490-3210-02	PRESSURE SPRING		2
11	4004-5975-01	GEAR		1
12	4004-5929-01	GEAR		1
13	4004-5932-01	LEVER		1
14	4004-5931-01	TENSION SPRING		1
15	4004-5922-01	GEAR		1
16	4004-5948-01	GEAR		1
17	1400-2264-09	TENSION SPRING		1
18	4004-5933-01	GEAR		1
19	4004-5919-01	GEAR		1
20	1200-3221-04	BUSHING		1
21	4004-5952-01	BUSHING		1
22	4004-5935-01	GEAR		1
23	4004-5950-01	ROLL		8
24	4004-5911-02	COLLAR		2
25	4004-0754-02	GUIDE ASSY UNDER		1
26	4004-5974-02	ROLL		8

INDEX	PART NO.	PART NAME	REC	QTY
27	4004-5951-01	INSTRUCTIONS		1
28	4004-5949-01	TORSION SPRING		1
29	4004-5910-01	BRACKET		1
30	4004-5990-02	PROTECTION		1
31	4004-5996-01	PROTECTION		1
32	4004-5939-01	PULLEY		1
33	4004-5928-01	GEAR		1
34	1274-2611-01	BUSHING		4
35	4004-5915-02	ROLLER		1
36	4004-5987-01	BUSHING		1
37	4004-5913-01	TORSION SPRING		1
38	4004-5912-01	ACTUATOR		1
39	4004-5969-01	BUSHING		1
40	4004-5970-01	TORSION SPRING		1
41	4004-5971-01	EARTH GROUND		1
42	4122-0901-01	PHOTO INTERRUPTER (PC10)		1
43	4004-5908-01	TORSION SPRING		1
44	4004-5968-01	GUIDE		1
45	4004-5988-01	SHOULDER SCREW		1
46	4004-5991-03	PROTECTION		1
47	4004-5917-03	GUIDE		1
48	4004-5980-02	COVER		1
49	4004-5978-03	COVER FUSING RT		1
50	4004-5903-01	ROLL		4
51	4004-5926-01	GEAR		1

INDEX	PART NO.	PART NAME	REC	QTY	SFIX
08	4004-7309-01	LABEL		1	011
08	4004-7310-01	LABEL		1	201, 204, 211, 214, 301, 303, 304, 311, 313, 314

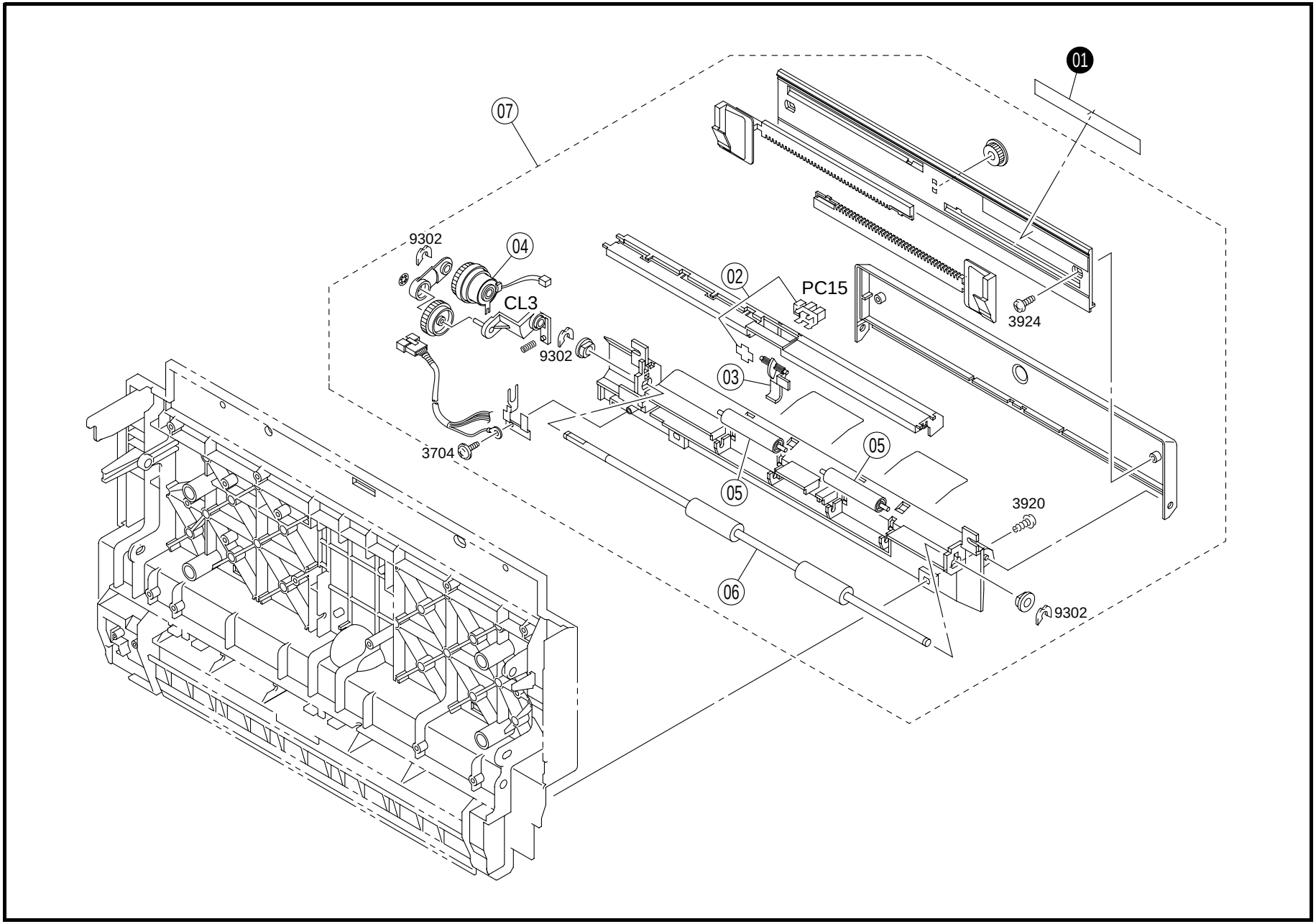
01
07
9302
04
CL3
02
PC15
3924
9302
03
3704
05
05
3920
06
9302

INDEX	PART NO.	PART NAME	REC	QTY
02	4002-0902-01	PHOTO INTERRUPTER M. FEED (PC15)		1
03	4603-3214-01	ACTUATOR MANUAL FEED		1
04	9322-1000-41	CLUTCH (CL3)		1
05	4497-3116-01	ROLL MANUAL FEED		2
06	4004-3210-02	ROLLER MANUAL FEED		1
07	4004-0317-02	MANUAL FEED MANUAL FEED		1

INDEX	PART NO.	PART NAME	REC	QTY	SFIX
01	4004-7311-01	LABEL		1	204, 214, 301, 311
01	4004-7312-01	LABEL		1	011, 201, 211, 303, 304, 313, 314

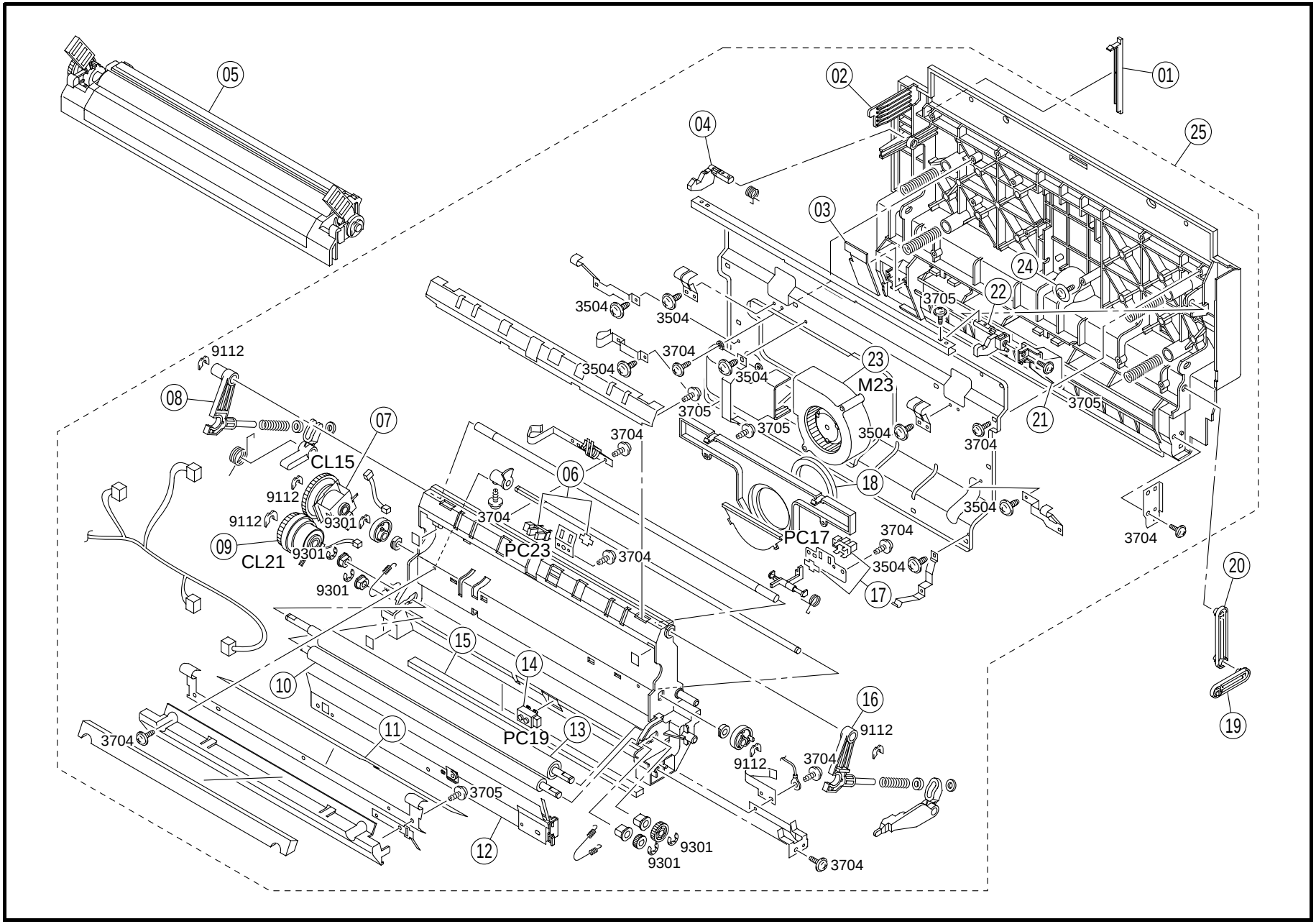
05
02
01
04
25
03
24
22
3705
3504
3504
3704
3504
23
M23
3705
3705
3705
3504
21
3704
9112
08
07
CL15
06
18
9112
9112
9301
3704
3504
PC17
3704
3704
09
CL21
9301
PC23
3704
3504
9301
17
20
15
14
10
16
19
11
PC19
13
9112
3704
9112
3704
3705
12
9301
9301
3704

INDEX	PART NO.	PART NAME	REC	QTY
01	4004-3597-01	HOLDER		1
02	4004-3505-05	COVER		1
03	4004-3550-02	COVER		1
04	4004-3520-02	LEVER		1
05	4697-171	TRANSFER ROLLER UNIT	RP	1
06	4002-0902-01	PHOTO INTERRUPTER (PC23)		1
07	9322-1000-61	CLUTCH (CL15)		1
08	4004-4711-02	ARM		1
09	9322-1000-51	CLUTCH (CL21)		1
10	4004-3502-02	ROLLER		1
11	4004-3568-03	NETURALIZING MEMBER		1
12	4004-0156-02	GUIDE ASSY	RP	1
13	4004-3501-02	ROLLER		1
14	9335-1910-11	SOLID STATE SWITCH (PC19)		1
15	4004-3536-02	SEAL		1
16	4004-4724-02	ARM		1
17	4004-0902-01	PHOTO INTERRUPTER (PC17)		1
18	4004-3551-01	SEAL		1

INDEX	PART NO.	PART NAME	REC	QTY
19	4004-3544-03	ARM		1
20	4004-3537-02	ARM		1
21	4004-3542-03	LEVER		1
22	4004-3519-03	LEVER		1
23	9313-1910-61	FAN MOTOR (M23)		1
24	1250-2301-01	SCREW		1
25	4004-0154-02	TRANSPORT UNIT		1

INDEX	PART NO.	PART NAME	REC	QTY	SFIX

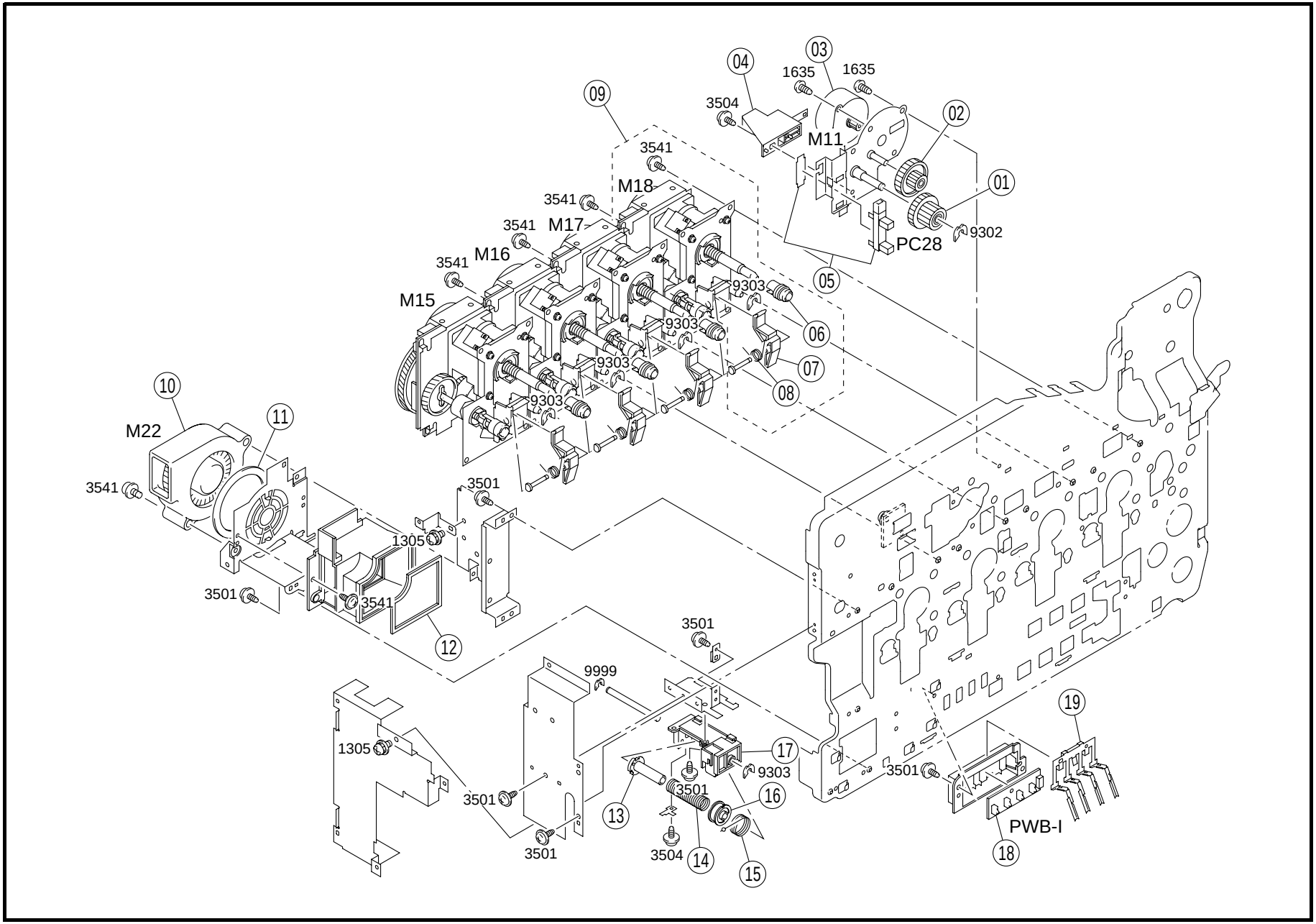
04
03
1635
1635
09
3504
02
M11
3541
01
M18
3541
M17
3541
9302
PC28
M16
3541
05
9303
M15
9303
06
9303
07
9303
08
10
11
M22
3541
3501
1305
3501
3541
12
3501
9999
19
1305
17
9303
3501
3501
16
13
3501
3504
14
15
PWB-I
18

INDEX	PART NO.	PART NAME	REC	QTY
01	4004-4532-01	GEAR		1
02	4004-4533-01	GEAR		1
03	9314-1000-31	MOTOR (M11)		1
04	4004-0758-01	HOLDER ASSY		1
05	4004-0903-01	PHOTO INTERRUPTER (PC28)		1
06	4004-2501-03	JOINT		4
07	4004-2594-01	LEVER		4
08	4004-2507-02	TORSION SPRING		4
09	4004-0324-02	PC³ƒ?Š (M15-18)		4
10	9313-1000-72	FAN MOTOR (M22)		1
11	4004-2148-01	SEAL		1
12	4004-2142-01	SEAL		1
13	4143-3762-01	COLLAR		1
14	4004-1061-02	TORSION SPRING		1
15	4004-1065-02	WIRE		1
16	4143-3761-01	PULLEY		1
17	4004-1060-02	HOLDER		1
18	1164-0105-01	PW BOARD-I (PWB-I)		1
19	1164-3020-03	LEVER		1

INDEX	PART NO.	PART NAME	REC	QTY	SFIX

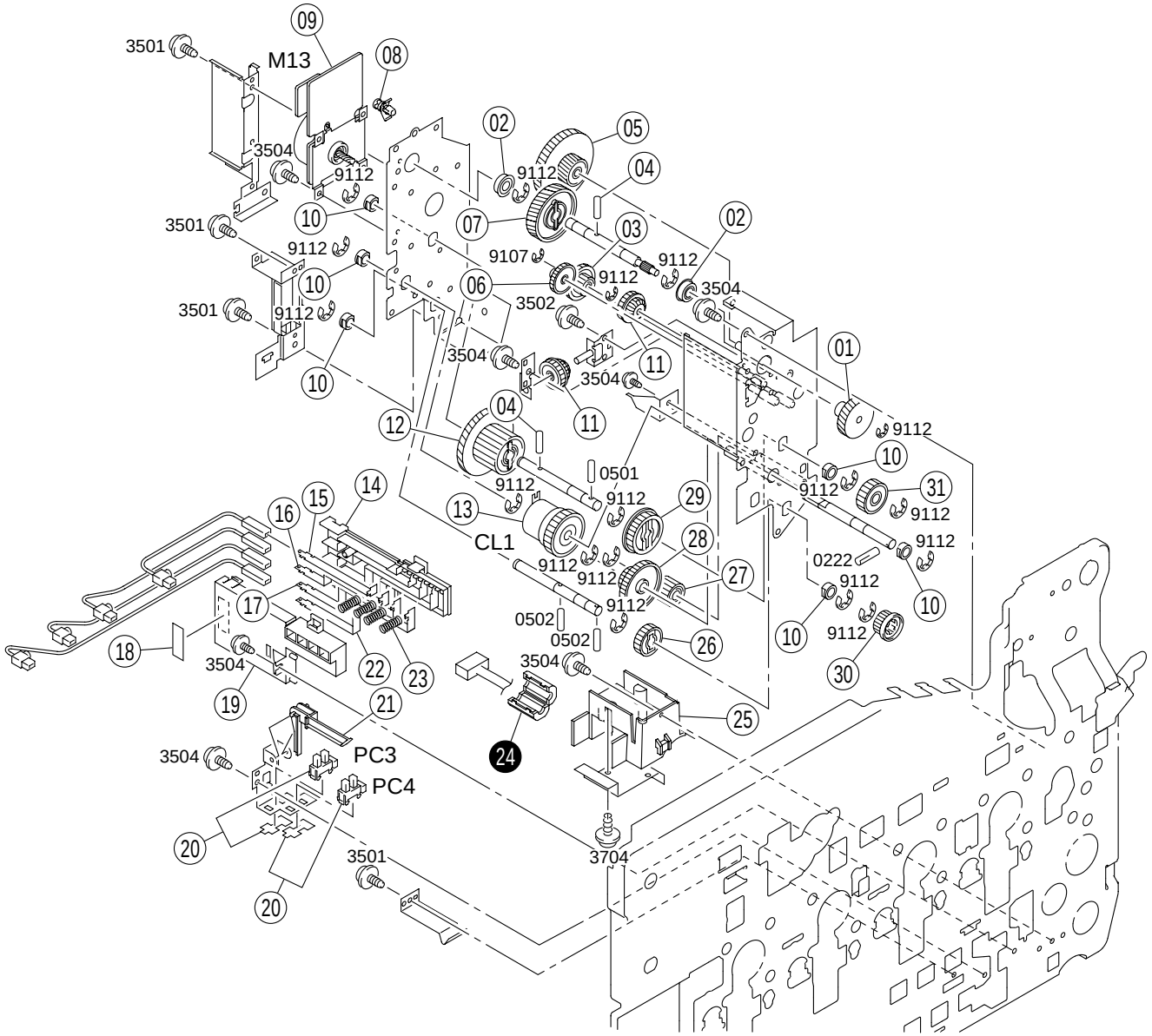
M13
CL1
PC3
PC4
3501
3504
9112
9107
3502
0501
0222
0502
3704
01
02
03
04
05
06
07
08
09
10
11
12
13
14
15
16
17
18
19
20
21
22
23
24
25
26
27
28
29
30
31

INDEX	PART NO.	PART NAME	REC	QTY
01	4004-2542-02	GEAR		1
02	1300-4342-07	BALL BEARING		2
03	4004-2544-01	GEAR		1
04	4004-2547-01	PIN		2
05	4004-2538-01	GEAR		1
06	4004-2543-02	GEAR		1
07	4004-2540-01	GEAR		1
08	9384-1900-55	PWB SUPPORT 9.53H		1
09	9314-2000-21	MOTOR (M13)		1
10	1200-3131-03	BUSHING		6
11	4004-2545-01	GEAR		2
12	4004-2513-02	GEAR		1
13	9322-1000-21	CLUTCH (CL1)		1
14	4004-2311-01	HOLDER		1
15	4004-2313-01	CONTACT		1
16	4004-2314-01	CONTACT		1
17	4004-2315-01	CONTACT		1
18	1129-7303-01	LABEL		1
19	4004-2312-01	LID		1
20	4004-0904-01	PHOTO INTERRUPTER (PC3.4)		2
21	4004-3012-01	LEVER		1
22	4004-2316-01	CONTACT		1
23	4004-2317-01	PRESSURE SPRING		4
25	4004-2242-02	HOLDER		1
26	4004-2519-01	GEAR		1
27	4004-2517-02	GEAR		1
28	4004-2515-02	GEAR		1
29	4004-2523-01	GEAR		1
30	4004-2521-01	GEAR		1
31	4004-2514-02	GEAR		1

INDEX	PART NO.	PART NAME	REC	QTY	SFIX
24	9326-1810-51	FERRITE CORE		1	201, 211, 303, 313

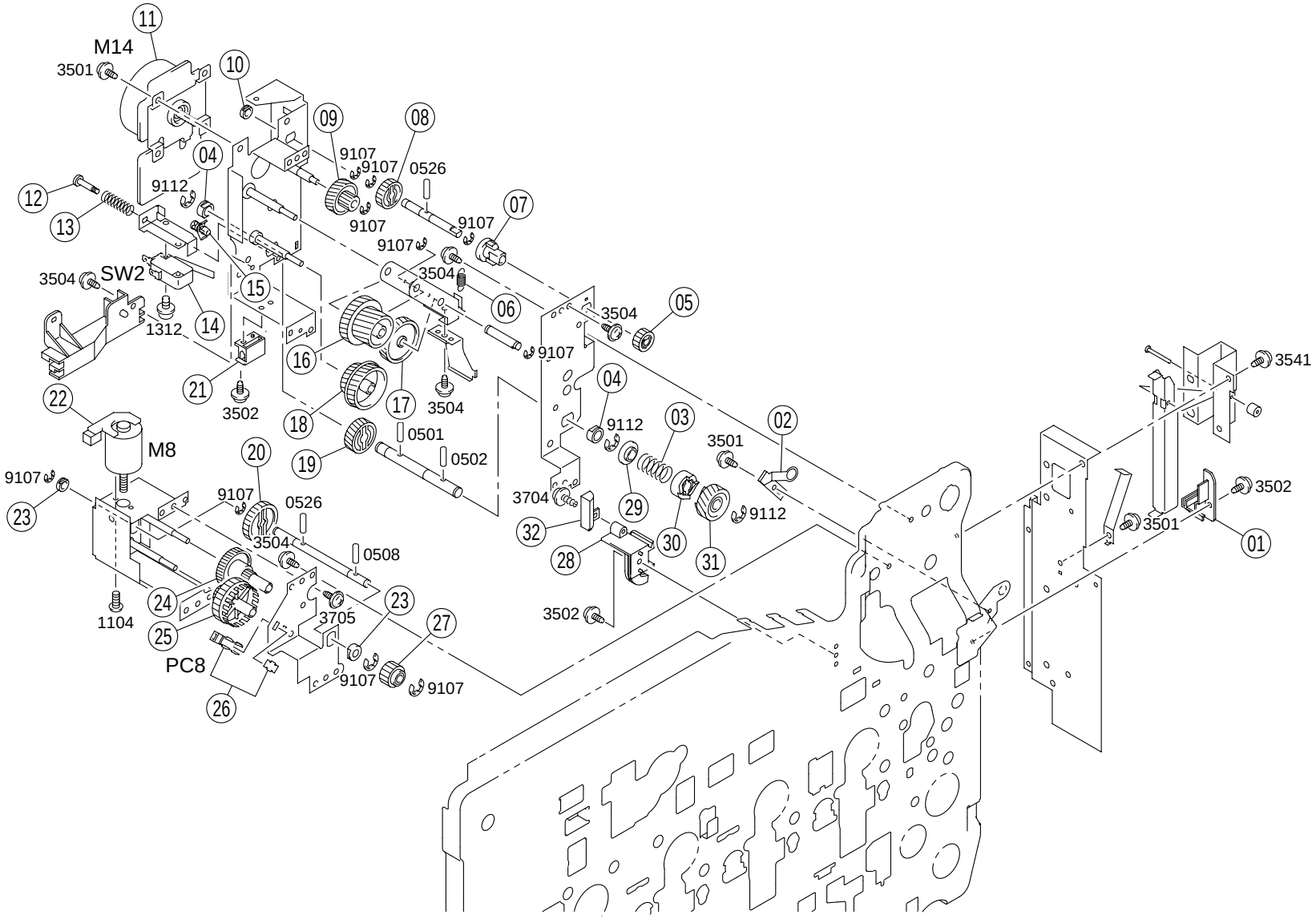
M14
3501
11
10
09
08
9107
9107
0526
04
9112
12
13
9107
07
9107
9107
3504
SW2
3504
15
06
05
3504
1312
14
16
9107
3541
21
3502
17
3504
04
22
18
9112
03
02
M8
0501
3501
20
19
0502
9107
9107
0526
3704
29
3502
23
32
9112
3501
3504
0508
28
30
31
01
24
23
3705
27
3502
1104
25
PC8
9107
9107
26

INDEX	PART NO.	PART NAME	REC	QTY
01	4004-3518-03	GUIDE		1
02	4004-5993-01	EARTH GROUND		1
03	4004-2587-02	PRESSURE SPRING		1
04	1300-4342-07	BALL BEARING		2
05	4004-2564-02	GEAR		1
06	4004-2582-01	TENSION SPRING		1
07	4004-2565-01	BUSHING		1
08	4004-2561-01	GEAR		1
09	4004-2560-01	GEAR		1
10	1200-3120-03	BUSHING		1
11	9314-2000-31	MOTOR (M14)		1
12	1100-1335-03	SHOULDER SCREW		1
13	4004-2248-02	PRESSURE SPRING		1
14	9331-2710-11	MICRO SWITCH (SW2)		1
15	9384-1900-55	PWB SUPPORT 9.53H		1
16	4004-2552-01	GEAR		1
17	4004-2553-02	GEAR		1
18	4004-2554-01	GEAR		1
19	4004-2580-01	GEAR		1
20	4004-2571-01	GEAR		1
21	4004-3517-01	GUIDE		1
22	4004-0751-01	MOTOR ASSY (M8)		1
23	1200-3120-02	BUSHING		2
24	4004-2569-01	GEAR		1
25	4004-2570-02	DETECTING PLATE		1
26	4002-0902-01	PHOTO INTERRUPTER (PC8)		1
27	4004-2577-01	GEAR		1
28	4004-3516-02	GUIDE		1
29	4004-2586-01	BUSHING		1
30	4004-2585-02	GEAR		1
31	4004-2555-01	GEAR		1
32	4004-3579-01	GUIDE		1

INDEX	PART NO.	PART NAME	REC	QTY	SFIX

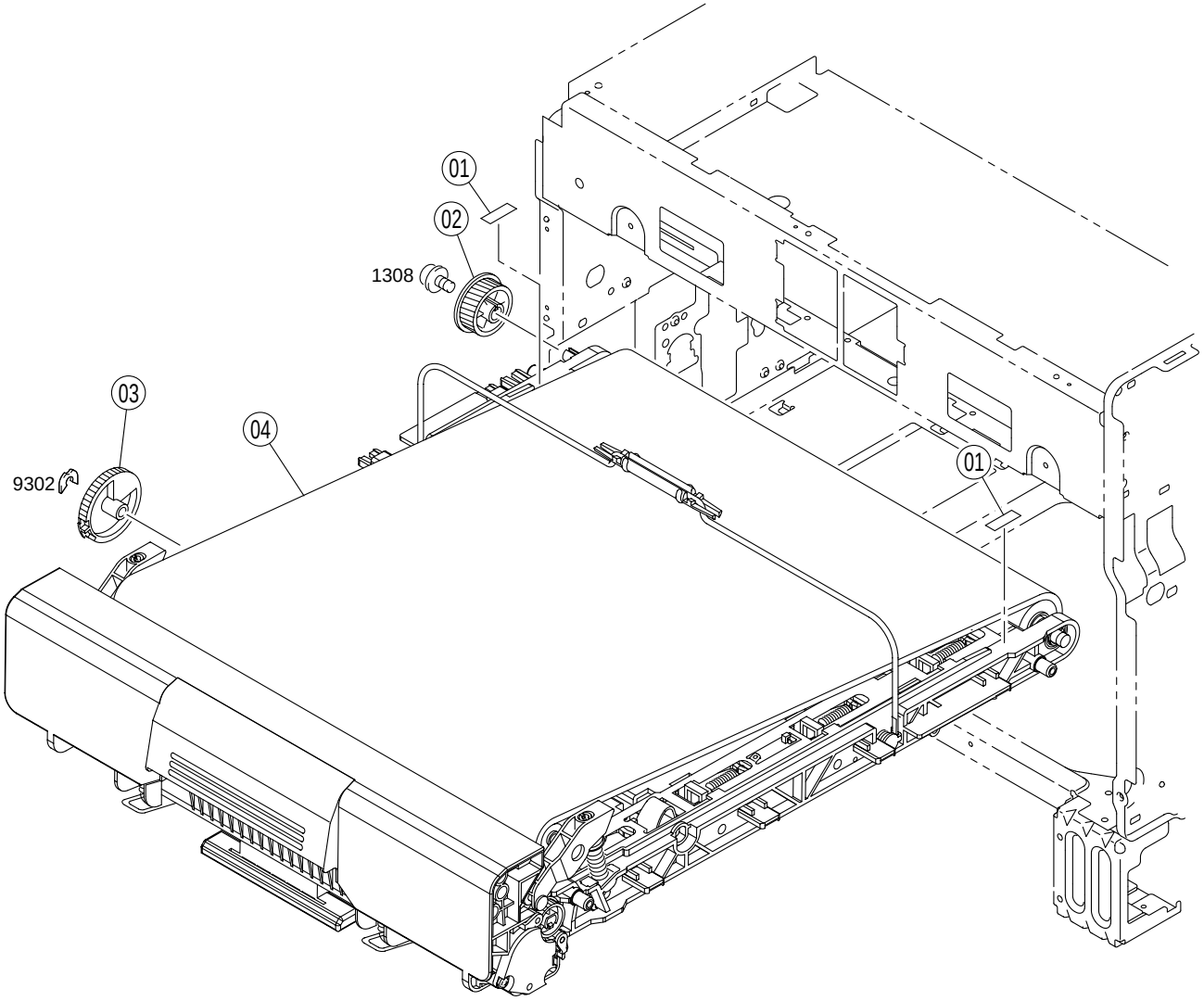
01
02
1308
03
04
9302
01

INDEX	PART NO.	PART NAME	REC	QTY	INDEX	PART NO.	PART NAME	REC	QTY
01	4004-7317-01	LABEL		2					
02	4004-4510-01	GEAR		1					
03	4004-4527-02	GEAR		1					
04	4697-161	TRANSFER BELT UNIT	RP	1					

INDEX	PART NO.	PART NAME	REC	QTY	SFIX

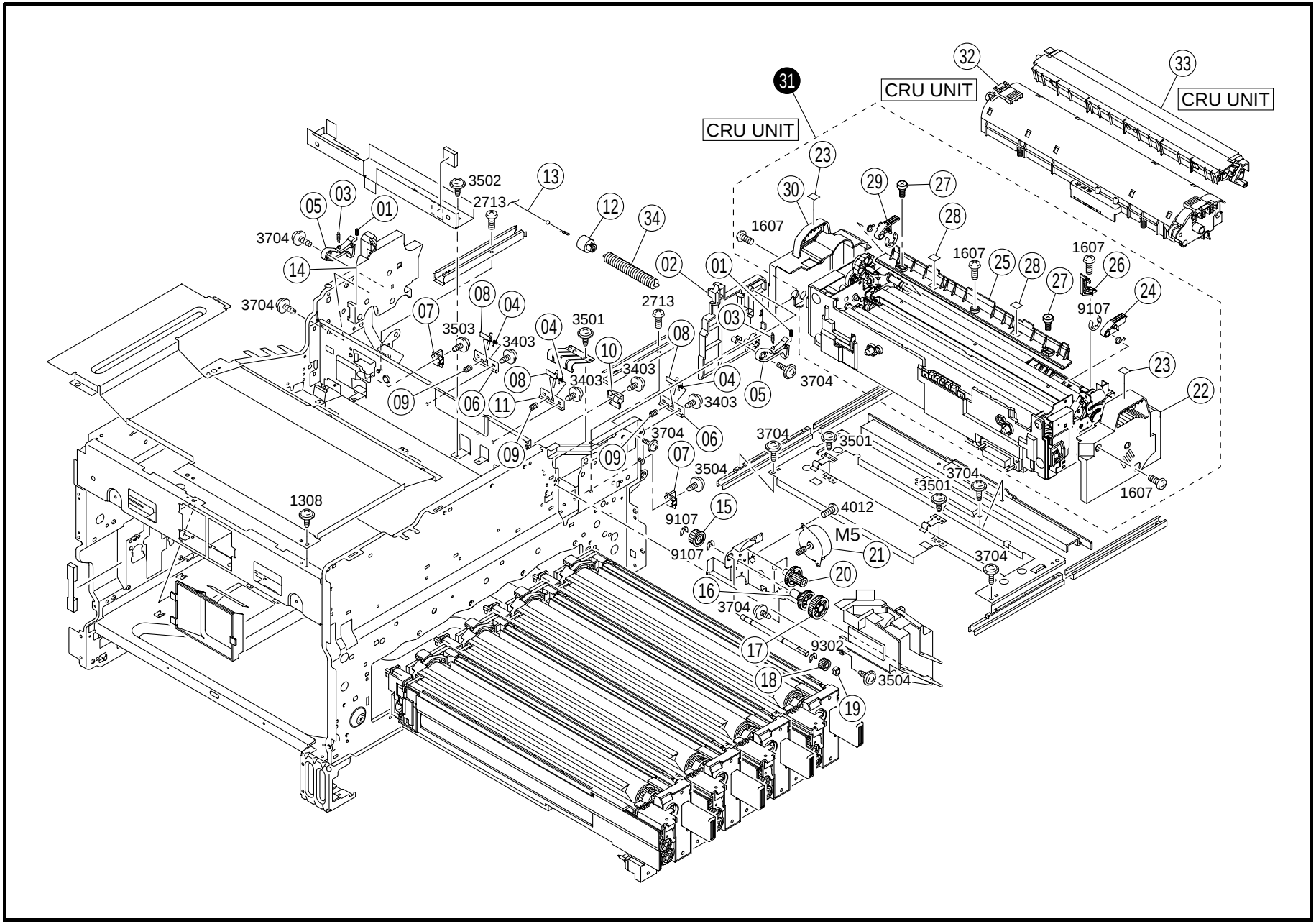
CRU UNIT
CRU UNIT
CRU UNIT
31
32
33
23
30
29
27
28
1607
25
26
24
9107
22
01
02
03
04
05
06
07
08
09
10
11
12
13
14
34
3502
2713
3704
3503
3403
3501
3504
1308
15
9107
4012
M5
21
20
16
17
9302
18
19

INDEX	PART NO.	PART NAME	REC	QTY
01	4004-2056-01	PRESSURE SPRING		2
02	4004-2070-03	GUIDE		1
03	4004-2063-01	TENSION SPRING		2
04	4004-4576-02	TORSION SPRING		3
05	4004-2055-02	STOP PLATE		2
06	4004-4578-03	HOLDER		2
07	4004-4707-01	STOPPER		2
08	4004-4577-04	SEPARATOR	RP	3
09	4004-4580-02	SCREW		3
10	4004-2608-02	BUSHING		1
11	4004-4579-03	HOLDER		1
12	4004-3512-02	FLANGE		1
13	4004-3511-02	WIRE		1
14	4004-2071-03	GUIDE		1
15	4004-2606-03	GEAR		1
16	4004-2602-03	GEAR		1
17	4004-2604-01	GEAR		1
18	4004-2605-02	GEAR		1
19	1200-3141-03	BUSHING		1
20	4004-2603-02	GEAR		1
21	9314-1000-21	MOTOR (M5)		1
22	4004-5739-03	COVER		1
23	4004-7325-01	LABEL		2
24	4004-5871-02	LEVER		1
25	4004-5736-01	GUIDE		1
26	4004-5753-03	LEVER		1
27	1100-1331-11	SHOULDER SCREW		2
28	4004-7318-01	LABEL		2
29	4004-5872-02	LEVER		1
30	4004-5740-03	COVER		1
32	4697-141	FUSING WEB UNIT (CRU)	RP	1
33	4697-151	OIL C0ATING UNIT (CRU)	RP	1
34	4004-3583-02	TENSION SPRING		1

INDEX	PART NO.	PART NAME	REC	QTY	SFIX
31	4697-111	FUSING UNIT (CRU)	RP	1	011
31	4697-121	FUSING UNIT (CRU)	RP	1	301, 303, 304, 311, 313, 314
31	4697-131	FUSING UNIT (CRU)	RP	1	201, 204, 211, 214

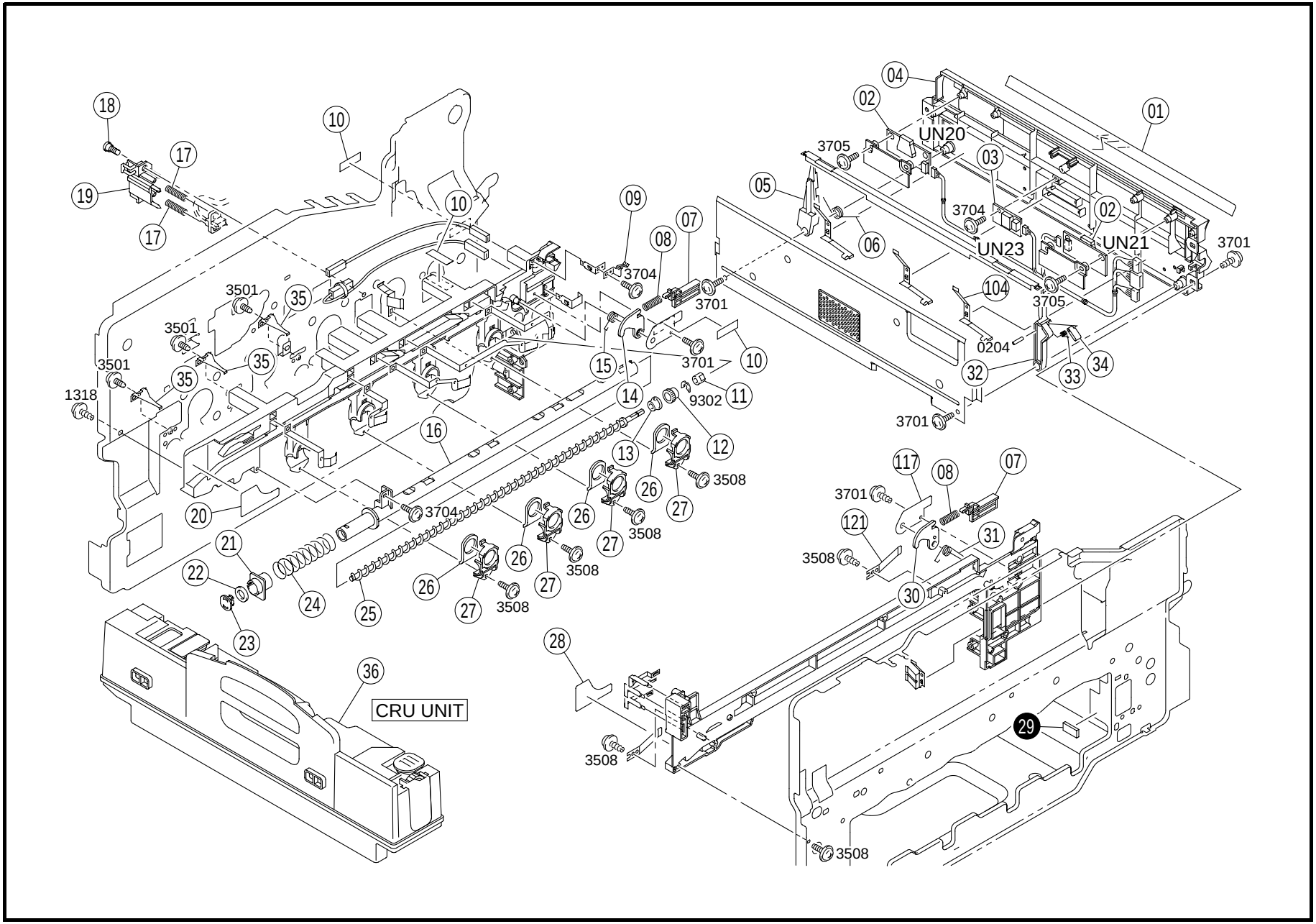
UN20
UN23
UN21
CRU UNIT
3705
3704
3701
3501
3508
9302
0204
1318

INDEX	PART NO.	PART NAME	REC	QTY
01	4004-3533-03	SEAL		1
02	9372-1000-21	PHOTO SENSING ELEMENT (UN20.21)	RP	2
03	9372-5910-11	HUMIDITY CONVERTION EL. (UN23)		1
04	4004-3507-04	GUIDE		1
05	4004-3557-02	LEVER		1
06	4004-3556-02	TORSION SPRING		1
07	4004-4547-02	BUSHING		2
08	4004-4546-02	PRESSURE SPRING		2
09	4004-3538-01	CONTACT		1
10	1129-7303-01	LABEL		3
11	1139-5561-01	BUSHING		1
12	4004-5612-01	GEAR		1
13	4004-5607-02	BUSHING		1
14	4004-4558-02	LEVER		1
15	4004-4555-02	TORSION SPRING		1
16	4004-5601-02	PIPE		1
17	4004-2216-01	PRESSURE SPRING		2
18	1100-1330-07	SHOULDER SCREW		1
19	4004-2215-01	HOLDER		1
20	4004-7330-01	LABEL		1
21	4004-5609-01	SHUTTER		1
22	4004-5613-01	SEAL		1
23	4004-5611-01	LID		1
24	4004-5610-01	PRESSURE SPRING		1
25	4004-5606-02	SCREW		1
26	4004-5605-01	SEAL		4
27	4004-5604-01	JOINT		4
28	4004-7329-01	LABEL		1
30	4004-4543-02	LEVER		1
31	4004-4544-02	TORSION SPRING		1
32	4004-3558-02	LEVER		1
33	4004-3563-01	TORSION SPRING		1
34	4004-3560-03	LEVER		1
35	4004-2236-01	PLATE SPRING		3
36	4697-101	WASTE TONER BOTTLE (CRU)	RP	1

INDEX	PART NO.	PART NAME	REC	QTY	SFIX
29	4004-6792-01	ELECTRICALLY CONDUCTIVE		1	201, 211, 303, 313

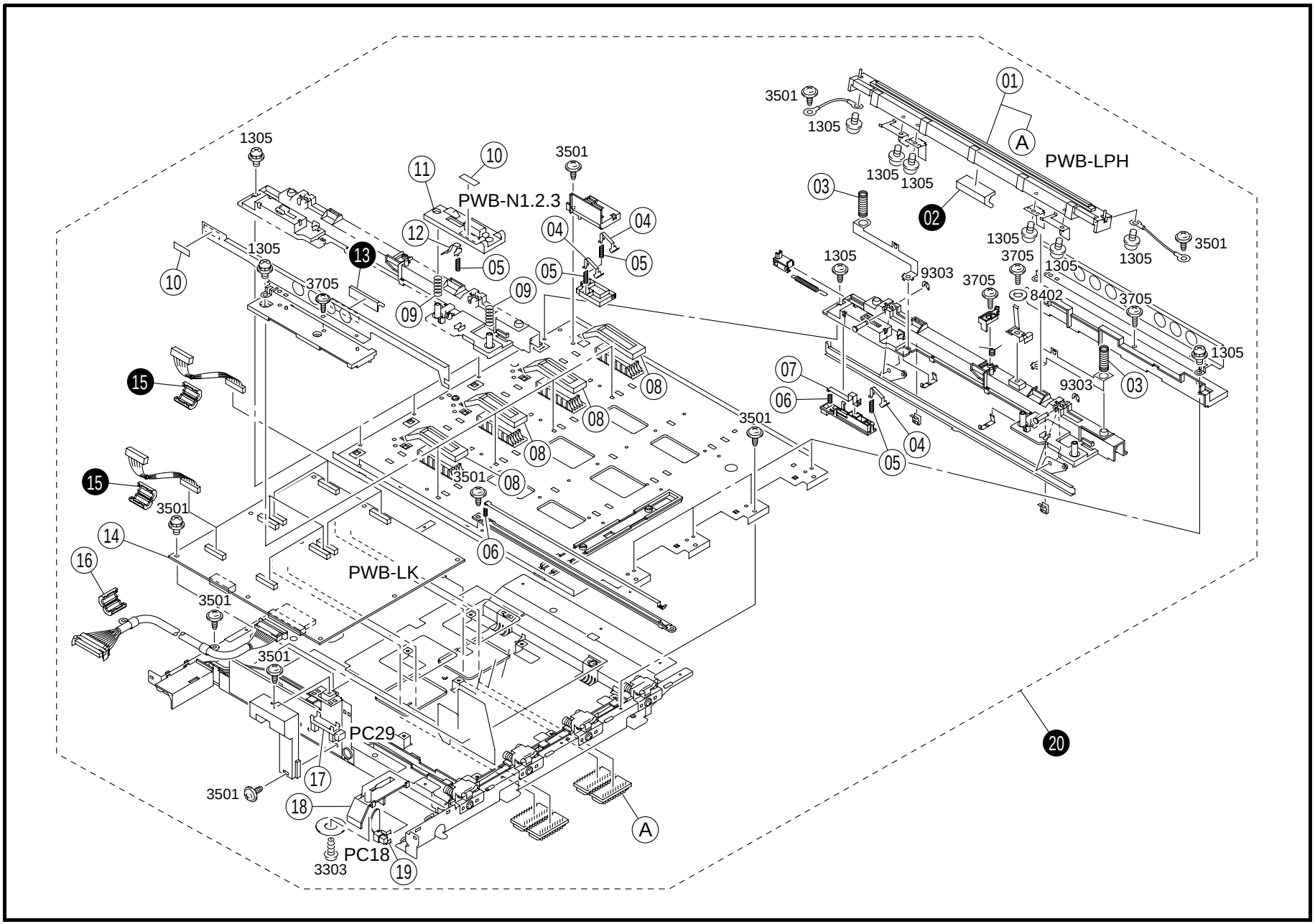
01
A
PWB-LPH
02
03
04
05
06
07
08
09
10
11
12
13
14
15
16
17
18
19
20
PWB-N1.2.3
PWB-LK
PC29
PC18
1305
3501
3705
9303
8402
3303

INDEX	PART NO.	PART NAME	REC	QTY	INDEX	PART NO.	PART NAME	REC	QTY
01	4004-0901-02	PWB ASSY (PWB-LPH)	RP	4					
03	4004-1807-01	PRESSURE SPRING		8					
04	4004-2401-01	CONTACT		12					
05	4004-5283-01	PRESSURE SPRING		15					
06	4004-2317-01	PRESSURE SPRING		5					
07	4004-2404-01	CONTACT		4					
08	4004-1812-01	SEAL		4					
09	4004-5282-01	PRESSURE SPRING		6					
10	1129-7303-01	LABEL		7					
11	4004-0105-03	PWB ASSY (PWB-N1.2.3)		3					
12	4004-5287-01	CONTACT		3					
14	4004-0116-02	PWB ASSY (PWB-LK)	RP	1					
16	9326-1000-91	FERRITE CORE		1					
17	9335-1910-61	SOLID STATE SWITCH (PC29)		1					
18	4004-2221-01	COVER		1					
19	9332-1910-21	PUSHBUTTON SWITCH (PC18)		1					

INDEX	PART NO.	PART NAME	REC	QTY	SFIX
02	4004-6790-01	ELECTRICALLY CONDUCTIVE		4	201, 211, 303, 313
13	4004-6791-01	ELECTRICALLY CONDUCTIVE		4	201, 211, 303, 313
15	9326-1001-01	FERRITE CORE		8	201, 211, 303, 313
20	4004-0331-03	LED UNIT		1	011, 204, 214, 301, 304, 311, 314
20	4004-0361-02	LED UNIT		1	201, 211, 303, 313

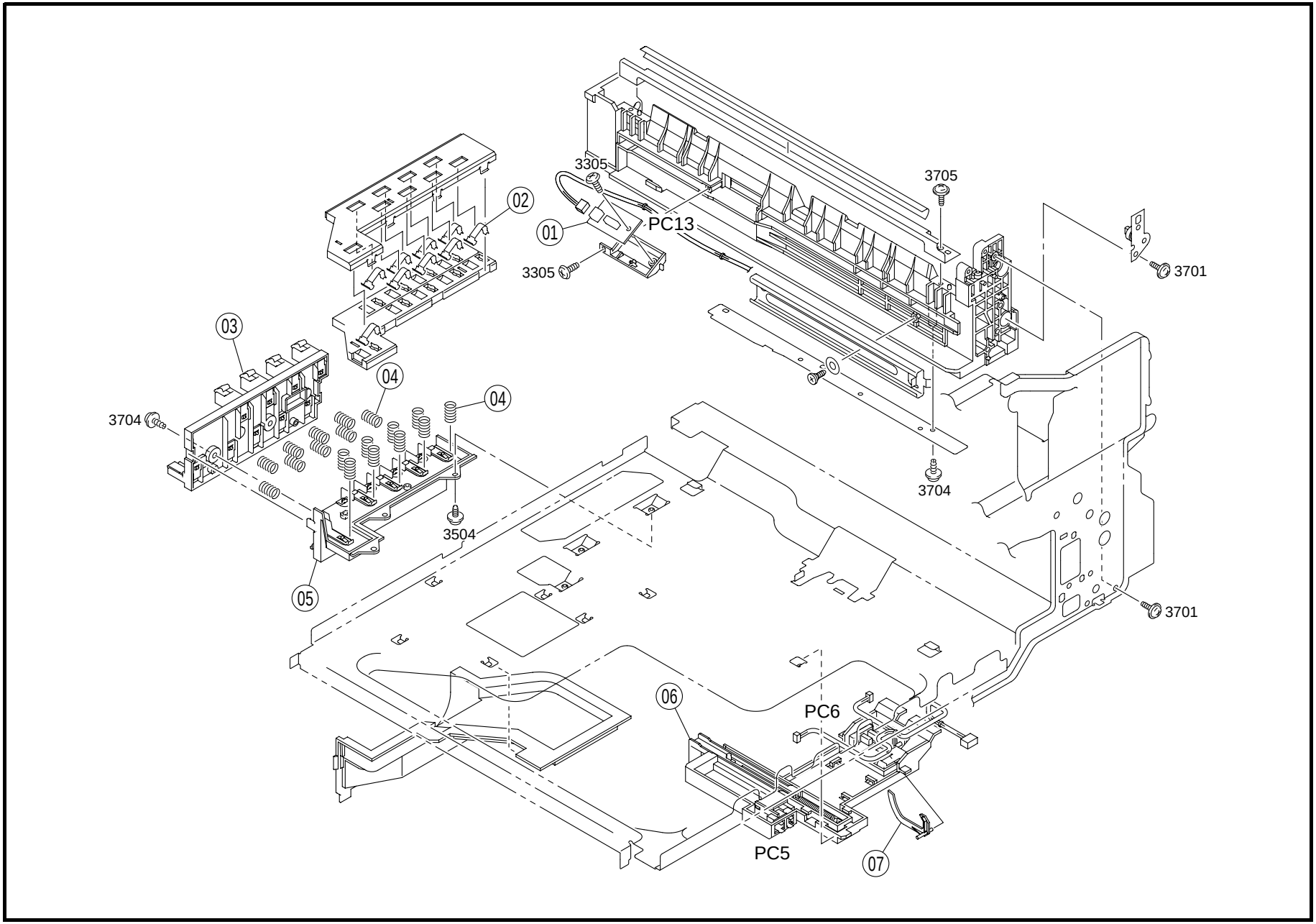
3305
3705
02
01
PC13
3305
3701
03
04
04
3704
3704
3504
05
3701
06
PC6
PC5
07

INDEX	PART NO.	PART NAME	REC	QTY	INDEX	PART NO.	PART NAME	REC	QTY
01	1164-0108-02	PW BOARD-H (PC13)		1					
02	4004-2303-02	CONTACT		9					
03	4004-0756-02	HOLDER ASSY		1					
04	4004-2309-01	PRESSURE SPRING		18					
05	4004-0757-02	HOLDER ASSY		1					
06	4004-0755-01	HOLDER ASSY (PC5.6)		1					
07	1164-3027-01	ACTUATOR		1					

INDEX	PART NO.	PART NAME	REC	QTY	SFIX

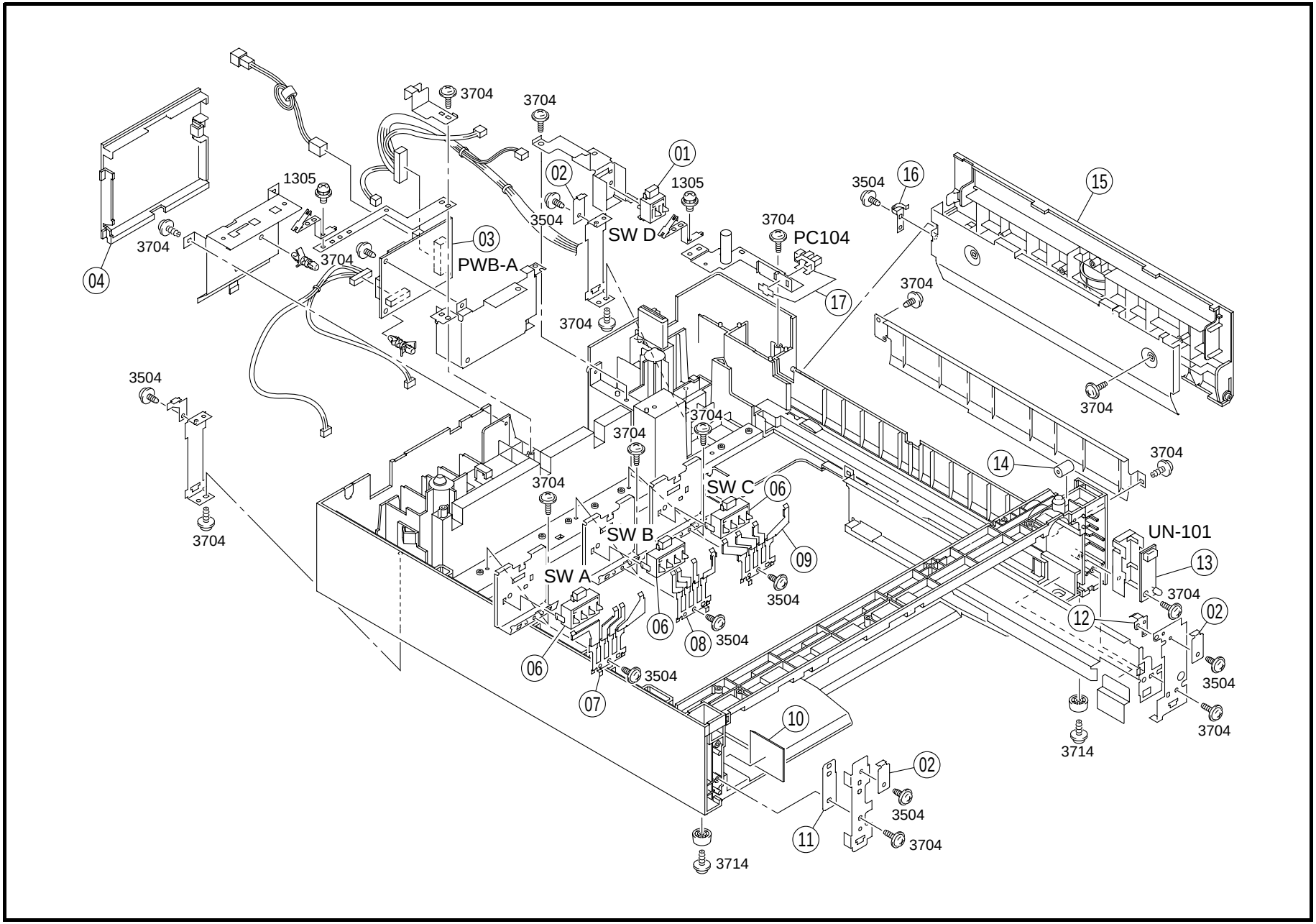
3704
3704
01
02
1305
1305
3504
16
15
3504
3704
PC104
SW D
03
PWB-A
3704
3704
04
17
3704
3704
3504
3704
3704
3704
3704
14
3704
SW C
06
3704
SW B
UN-101
09
13
SW A
3704
3504
02
12
06
08
3504
06
3504
3504
07
10
3704
3714
02
3504
11
3704
3714

INDEX	PART NO.	PART NAME	REC	QTY	INDEX	PART NO.	PART NAME	REC	QTY
01	9332-1710-61	SWITCH (SW-D)		1					
02	4658-3140-02	STOP PLATE		3					
03	4658-0101-04	PWB ASSY (PWB-A)	RP	1					
04	4658-3133-02	COVER		1					
05	4004-3041-01	STOP PLATE		1					
06	9332-1000-11	PUSHBUTTON SWITCH (SW-A.B.C)		3					
07	4658-3116-01	PLATE SPRING		1					
08	4658-3118-01	PLATE SPRING		1					
09	4658-3117-01	PLATE SPRING		1					
10	4658-3160-01	SPACER		1					
11	4658-3152-01	BRACKET		1					
12	4658-3129-01	PLATE SPRING		1					
13	4658-0102-01	PWB ASSY (UN-101)	RP	1					
14	4498-3388-01	COLLAR		1					
15	4658-3507-01	DOOR		1					
16	4658-3510-01	PLATE SPRING		1					
17	4002-0902-01	PHOTO INTERRUPTER (PC104)		1					

INDEX	PART NO.	PART NAME	REC	QTY	SFIX

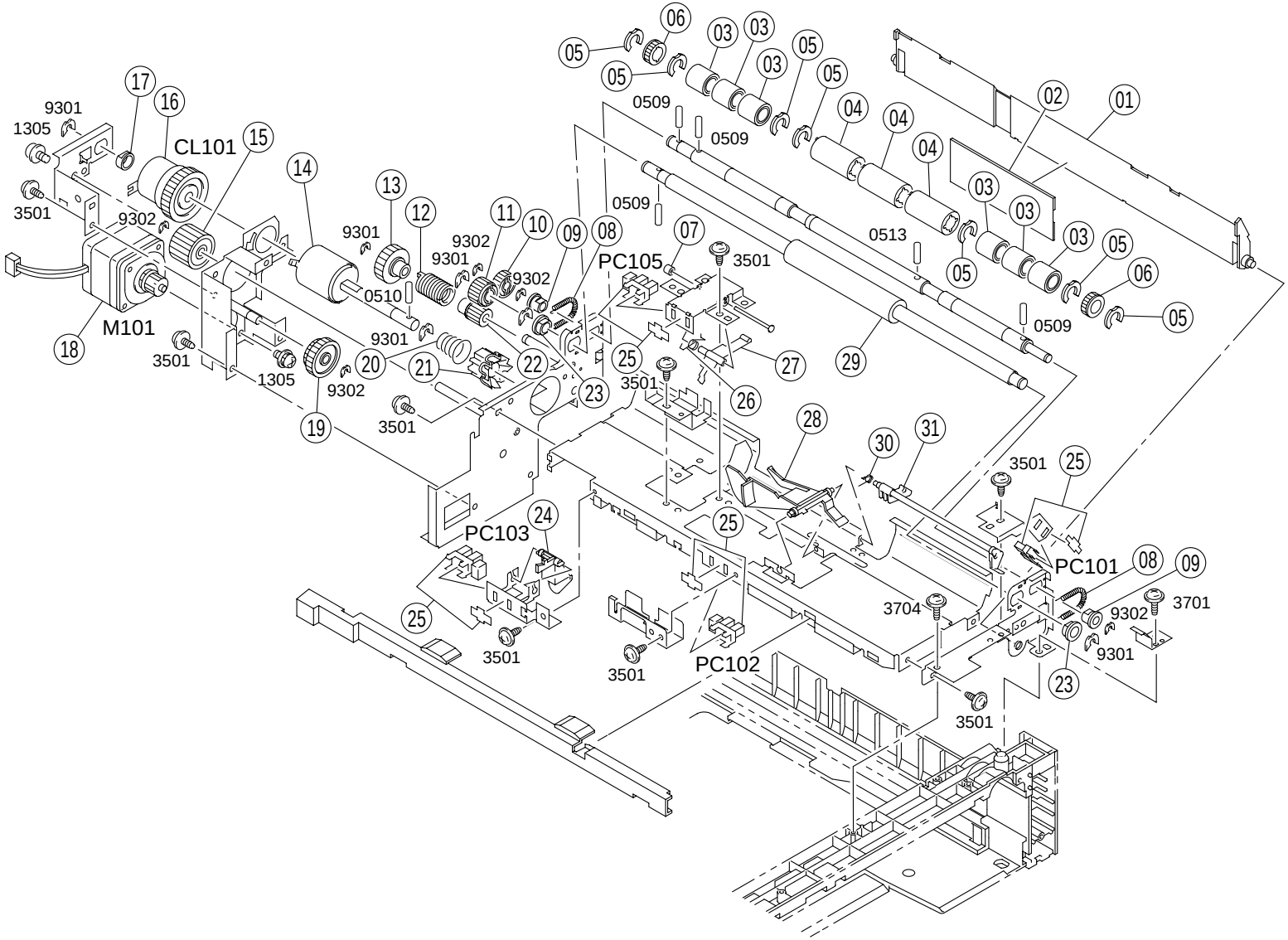
01
02
03
04
05
06
07
08
09
10
11
12
13
14
15
16
17
18
19
20
21
22
23
24
25
26
27
28
29
30
31
CL101
M101
PC101
PC102
PC103
PC105
0509
0510
0513
1305
3501
3701
3704
9301
9302

INDEX	PART NO.	PART NAME	REC	QTY
01	4658-3505-02	GUIDE		1
02	4658-3141-02	GUIDE		1
03	4658-3514-01	ROLL		6
04	4658-3513-01	ROLLER		3
05	4658-3149-01	STOP RING		7
06	4658-3511-01	KNOB		2
07	4658-3047-01	COLLAR		1
08	4658-3506-01	TENSION SPRING		2
09	4658-3518-01	BUSHING		2
10	4658-3504-01	GEAR		1
11	4658-3503-01	GEAR		1
12	4658-3210-01	TORSION SPRING	RP	1
13	4658-3205-01	GEAR		1
14	4658-3207-01	COLLAR		1
15	4658-3204-01	GEAR		1
16	9322-1000-21	CLUTCH (CL101)		1
17	4658-3516-01	BUSHING		1
18	9314-1000-11	MOTOR (M101)		1
19	4658-3203-01	GEAR		1
20	1164-3005-02	PRESSURE SPRING		1
21	1164-3004-03	PAWL		1
22	4658-3209-01	GEAR		1
23	4658-3517-01	BUSHING		2
24	4658-3126-01	LEVER		1
25	4002-0902-01	PHOTO INTERRUPTER (PC101-103.105)		4
26	4658-3147-01	TORSION SPRING		1
27	4658-3134-01	ACTUATOR		1
28	4658-3125-01	ACTUATOR		1
29	4658-3501-01	ROLLER		1
30	4658-3130-01	TORSION SPRING		1
31	4658-3112-01	LEVER		1

INDEX	PART NO.	PART NAME	REC	QTY	SFIX

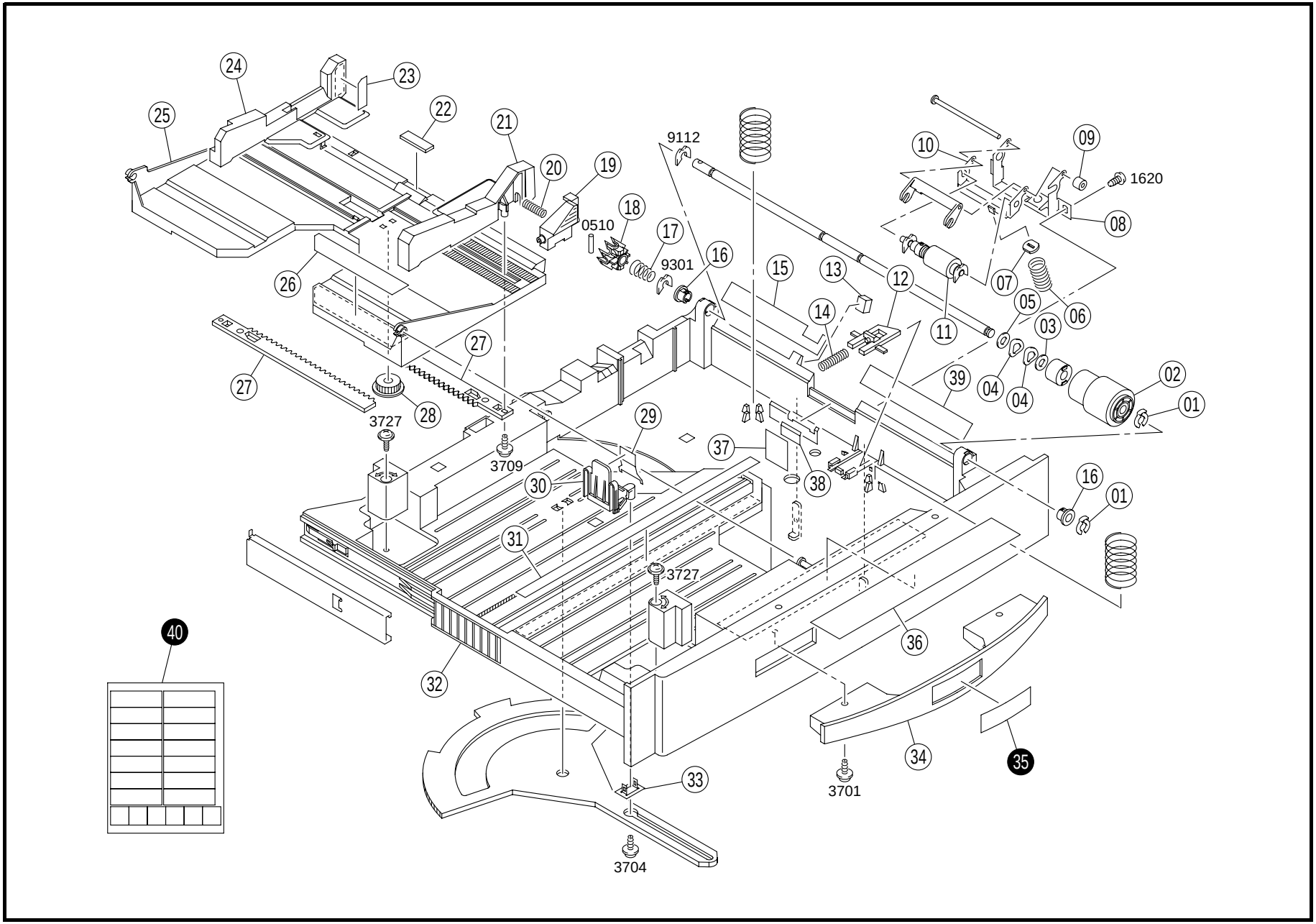
24
23
25
22
21
20
19
9112
10
09
1620
08
18
0510
17
9301
16
15
13
12
07
05
06
26
14
11
03
27
27
39
04
04
02
01
28
3727
29
37
3709
30
38
16
01
31
3727
40
36
32
34
35
33
3701
3704

INDEX	PART NO.	PART NAME	REC	QTY
01	4004-3007-01	STOP RING		2
02	4004-3002-01	ROLLER	RP	1
03	1164-3066-01	WASHER		1
04	1500-2660-13	WAVE WASHER		2
05	1200-1462-01	WASHER		1
06	4004-3006-02	PRESSURE SPRING		1
07	1144-3097-01	HOLDER		1
08	4004-3004-01	BRACKET		1
09	1200-2105-06	RETAINING RING		1
10	4004-3003-02	HOLDER		1
11	4658-0151-01	ROLLER ASSY MPC	RP	1
12	1164-3061-01	LEVER		1
13	1164-3009-01	CLANING MATERIAL	RP	1
14	1164-3062-01	PRESSURE SPRING		1
15	4004-3040-02	GUIDE		1
16	1164-3003-01	BUSHING		2
17	1164-3005-02	PRESSURE SPRING		1
18	1164-3004-03	PAWL		1
19	1164-3050-04	LOCK LEVER		1
20	1164-3060-01	PRESSURE SPRING		1
21	1164-3043-02	REGULATING PLATE		1
22	1164-3064-01	FRICTION SHEET		1
23	4004-7324-01	LABEL		1
24	4004-3028-01	REGULATING PLATE		1
25	4004-3022-02	LIFTING PLATE		1
26	4004-7314-01	LABEL		1
27	4004-3032-01	RACK		2
28	1164-3045-01	GEAR		1
29	4004-3042-01	GUIDE		1
30	4004-3023-01	REGULATING PLATE		1
31	4004-7313-01	LABEL		1
32	4004-3021-02	CASSETTE		1
33	4004-3031-01	BRACKET		1
34	4658-1001-03	HANDLE		1
36	4004-7306-01	LABEL		1
37	4004-3008-01	SEAL		1
38	4004-3038-01	GUIDE		1
39	4004-3024-01	GUIDE		1

INDEX	PART NO.	PART NAME	REC	QTY	SFIX
35	4002-7308-01	LABEL		1	201, 204, 211, 214, 301, 303, 304, 311, 313, 314
35	4002-7319-01	LABEL		1	011
40	1151-7371-01	LABEL		1	011, 201, 211, 303, 304, 313, 314
40	1151-7372-01	LABEL		1	204, 214, 301, 311

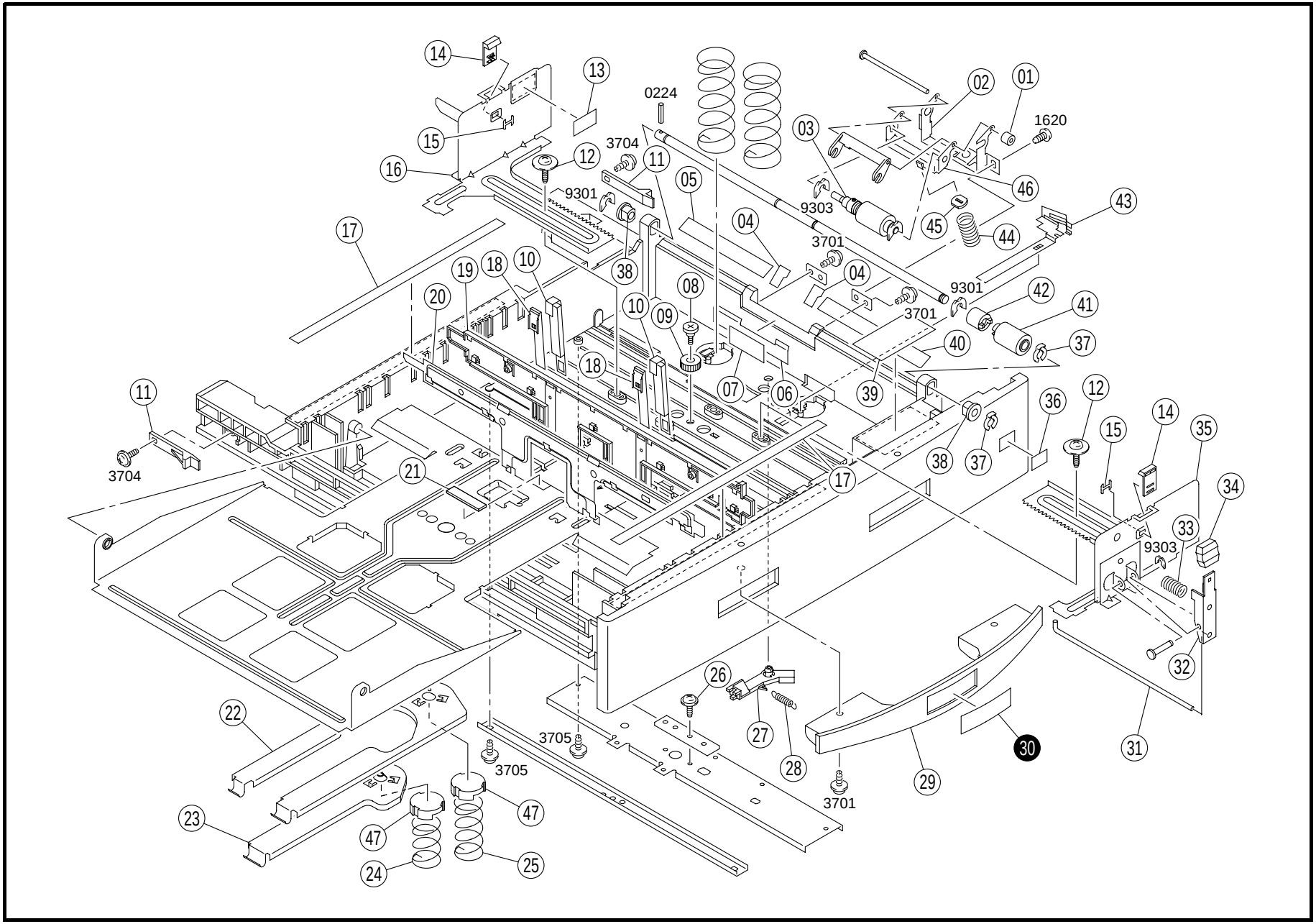
14
13
0224
02
01
1620
03
15
3704
12
11
16
05
46
9301
9303
43
17
04
45
44
3701
19
18
10
38
04
9301
42
20
08
10
09
3701
41
40
37
18
07
06
39
11
36
12
14
15
35
3704
21
38
37
17
34
33
9303
32
26
22
27
3705
28
30
31
3705
29
3701
23
47
47
24
25

INDEX	PART NO.	PART NAME	REC	QTY
01	4658-3047-01	COLLAR		1
02	4658-3036-01	BRACKET		1
03	4658-0151-01	ROLLER ASSY	RP	1
04	4658-3045-01	GUIDE		2
05	4658-3007-01	GUIDE		1
06	4658-3005-01	GUIDE PLATE		1
07	4658-3006-01	GUIDE		1
08	4498-3828-01	SHOULDER SCREW		1
09	4658-3012-01	GEAR		1
10	4658-3016-01	MEMBER		2
11	4498-3469-01	STOPPER		2
12	4658-3041-01	SCREW		4
13	4002-7306-01	LABEL		1
14	4658-3048-01	GUIDE		2
15	4658-3049-01	STOPPER		2
16	4658-3010-02	REGULATING PLATE		1
17	4658-7302-01	LABEL		2
18	4658-3015-01	PLATE SPRING		2
19	4658-3013-01	REGULATING PLATE		1
20	4658-3014-01	REINFORCE PLATE		1
21	0978-3811-01	FRICTION SHEET		1
22	4658-3022-02	LIFTING PLATE		1
23	4658-3024-02	LIFTING PLATE		1
24	4658-3025-01	PRESSURE SPRING		1
25	4658-3023-02	PRESSURE SPRING		1
26	4498-3834-01	SCREW		2
27	4498-3325-01	LEVER		1
28	4498-3404-01	TENSION SPRING		1
29	4658-1001-03	HANDLE		1
31	4658-3011-01	SHAFT		1
32	4498-3823-01	LEVER		1
33	4498-3825-01	PRESSURE SPRING		1
34	4498-3804-01	KNOB		1
35	4658-3009-01	REGULATING PLATE		1
36	4658-1003-01	LABEL		1
37	4658-3046-01	STOP RING		2
38	1274-3603-01	BUSHING		2
39	4658-7301-01	LABEL		1
40	4658-3008-01	GUIDE		1
41	4658-3027-01	ROLLER	RP	1
42	4658-3028-01	DRUM		1
43	4658-3002-01	PLATE SPRING		1
44	4658-3037-01	PRESSURE SPRING		1
45	1144-3097-01	HOLDER		1
46	4658-3034-01	HOLDER		1
47	4658-3050-01	SPACER		2

INDEX	PART NO.	PART NAME	REC	QTY	SFIX
30	4002-7308-01	LABEL		1	201, 204, 211, 214, 301, 303, 304, 311, 313, 314
30	4002-7319-01	LABEL		1	011

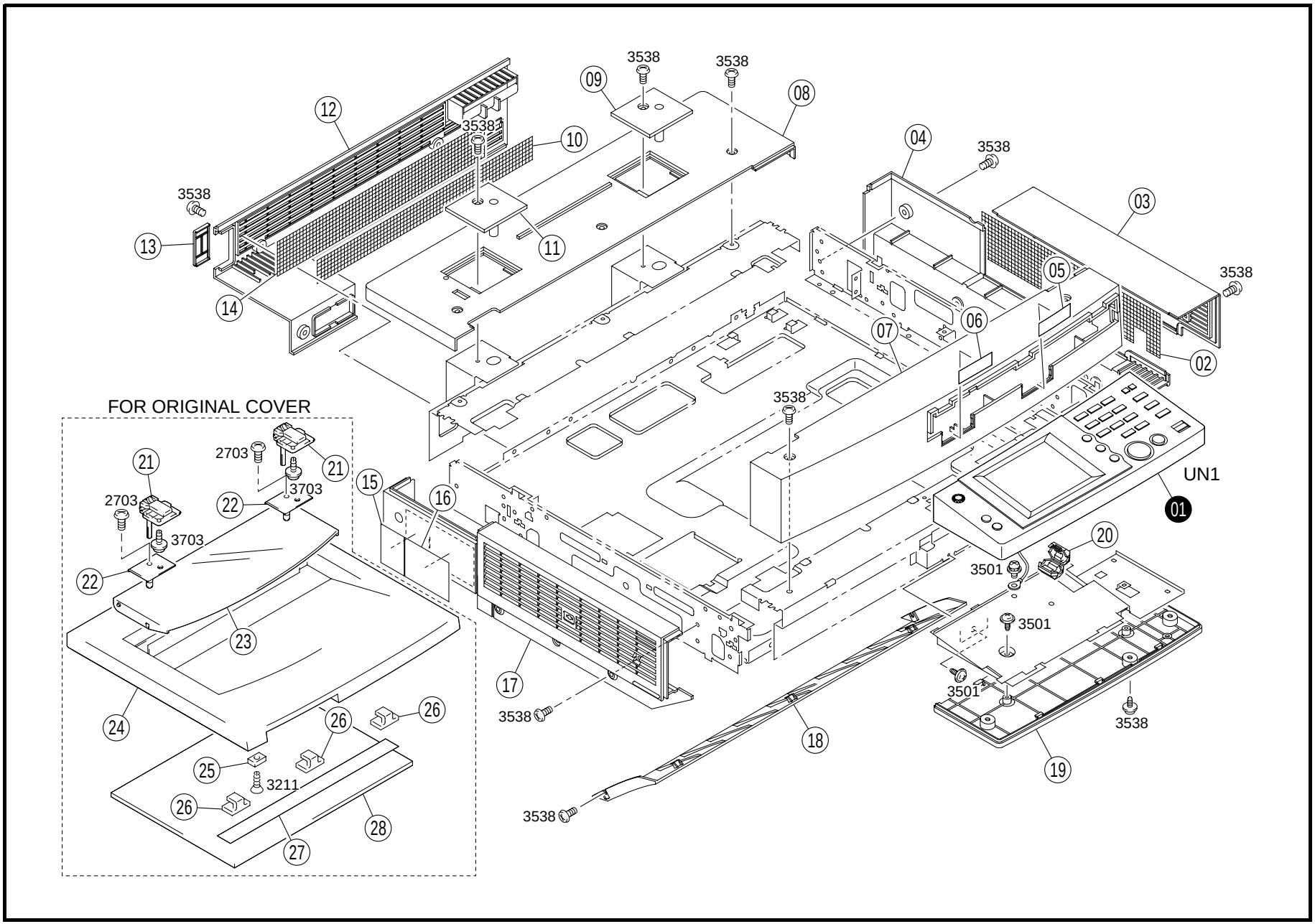
FOR ORIGINAL COVER
UN1
01
02
03
04
05
06
07
08
09
10
11
12
13
14
15
16
17
18
19
20
21
22
23
24
25
26
27
28
2703
3211
3501
3538
3703

INDEX	PART NO.	PART NAME	REC	QTY
02	4005-1110-02	FILTER		1
03	4005-1395-03	RIGHT COVER		1
04	4005-1399-03	COVER		1
05	4005-1401-01	COVER		1
06	4005-1402-01	COVER		1
07	4005-1391-04	FRONT COVER		1
08	4005-1392-03	TOP COVER		1
09	4005-1400-02	COVER		1
10	4005-1107-01	FILTER		1
11	4005-1397-02	COVER		1
12	4005-1394-03	REAR COVER		1
13	9384-2310-41	COVER		1
14	4005-1108-01	FILTER		1
15	4004-7402-01	LABEL		1
16	4004-7401-01	LABEL		1
17	4005-1396-03	LEFT COVER		1
18	4005-1393-04	FRONT COVER		1
19	4005-1398-03	COVER		1

INDEX	PART NO.	PART NAME	REC	QTY
20	0816-6201-01	FERRITE CORE		1
21	1139-1705-01	HINGE OPTION		2
22	1171-1122-01	COVER OPTION		2
23	1171-1126-01	ORIGINAL HOLDER OPTION		1
24	1171-1125-02	COVER OPTION		1
25	9326-2820-11	MAGNET OPTION		1
26	1139-1703-02	SLIDER OPTION		3
27	1139-1706-01	POLYESTER FILM OPTION		1
28	1139-1704-14	PAD OPTION		1

INDEX	PART NO.	PART NAME	REC	QTY	SFIX
01	4005-0111-02	CONTROL PANEL ASSY (UN1)	RP	1	011
01	4005-0112-02	CONTROL PANEL ASSY (UN1)	RP	1	201, 204, 211, 214, 301, 303, 304, 311, 313, 314

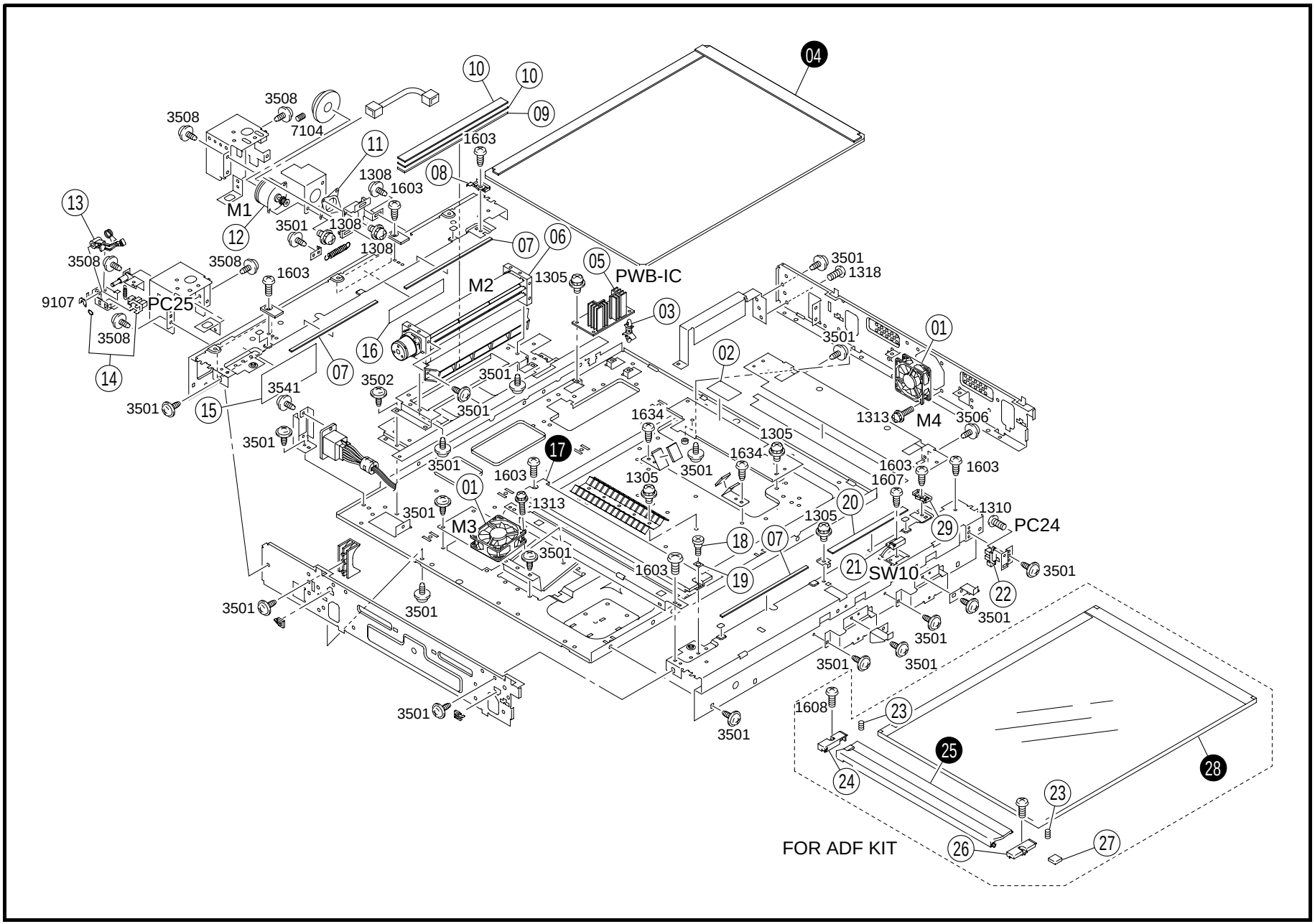
04
10
10
09
3508
3508
7104
11
1603
08
1308
1603
M1
13
12
3501
1308
1308
07
06
3508
3508
1603
05
PWB-IC
1305
M2
9107
PC25
3508
03
16
07
14
3501
3502
3501
3501
15
3541
3501
3501
1634
1305
1634
17
3501
1603
1305
3501
01
1313
3501
M3
3501
1603
19
18
07
20
1305
1603
1607
1603
1313
M4
3506
01
3501
1318
3501
02
1310
PC24
29
21
SW10
22
3501
3501
3501
3501
3501
3501
3501
3501
1608
23
25
24
28
23
26
27
FOR ADF KIT

INDEX	PART NO.	PART NAME		REC	QTY
01	9313-1000-61	FAN MOTOR	(M3.4)		2
02	1179-1604-01	SEAL			1
03	9384-1900-57	PWB SUPPORT 9.53H			3
05	4005-0105-03	PWB ASSY	(PWB-IC)	RP	1
06	9313-1000-82	FAN MOTOR	(M2)		1
07	4005-1619-02	SEAL			3
08	1159-1610-01	SET PLATE			1
09	4005-1663-01	SEAL			1
10	4005-1662-01	SEAL			2
11	4002-1471-01	CUSHION			1
12	9314-1910-81	MOTOR	(M1)		1
13	4005-1722-01	LEVER			1
14	4641-0901-01	SOLID STATE SWITCH	(PC25)		1
15	4002-1315-01	PROTECTION			1
16	4005-1316-01	PROTECTION			1
18	1065-1360-01	SHOULDER SCREW			1
19	1053-3869-01	PLATE SPRING			1
20	4005-1620-01	SEAL			1

INDEX	PART NO.	PART NAME		REC	QTY
21	9334-2610-11	REED SWITCH	(SW10)		1
22	9335-1310-41	PHOTO INTERRUPTER	(PC24)		1
23	1139-1904-02	PRESSURE SPRING	OPTION		2
24	1139-1906-01	HOLDER	OPTION		1
26	1139-1905-01	HOLDER	OPTION		1
27	4005-1909-01	SOUND SHIELD	OPTION		1
29	1159-1605-01	SET PLATE			1

INDEX	PART NO.	PART NAME		REC	QTY	SFIX
04	4005-0751-01	ORIGINAL GLASS ASSY			1	011, 303, 313
04	4005-0752-01	ORIGINAL GLASS ASSY			1	204, 214, 301, 311
04	4005-0753-01	ORIGINAL GLASS ASSY			1	201, 211, 304, 314
17	1154-1661-02	WIDTH SCALE			1	011, 303, 313
17	1154-1662-02	WIDTH SCALE			1	204, 214, 301, 311
17	1154-1663-02	WIDTH SCALE			1	201, 211, 304, 314
25	4005-1664-01	SCALE	OPTION		1	011, 303, 313
25	4005-1665-01	SCALE	OPTION		1	204, 214, 301, 311
25	4005-1666-01	SCALE	OPTION		1	201, 211, 304, 314
28	4005-0158-02	ORIGINAL GLASS ASSY	OPTION		1	011, 303, 313
28	4005-0159-02	ORIGINAL GLASS ASSY	OPTION		1	204, 214, 301, 311
28	4005-0160-02	ORIGINAL GLASS ASSY	OPTION		1	201, 211, 304, 314

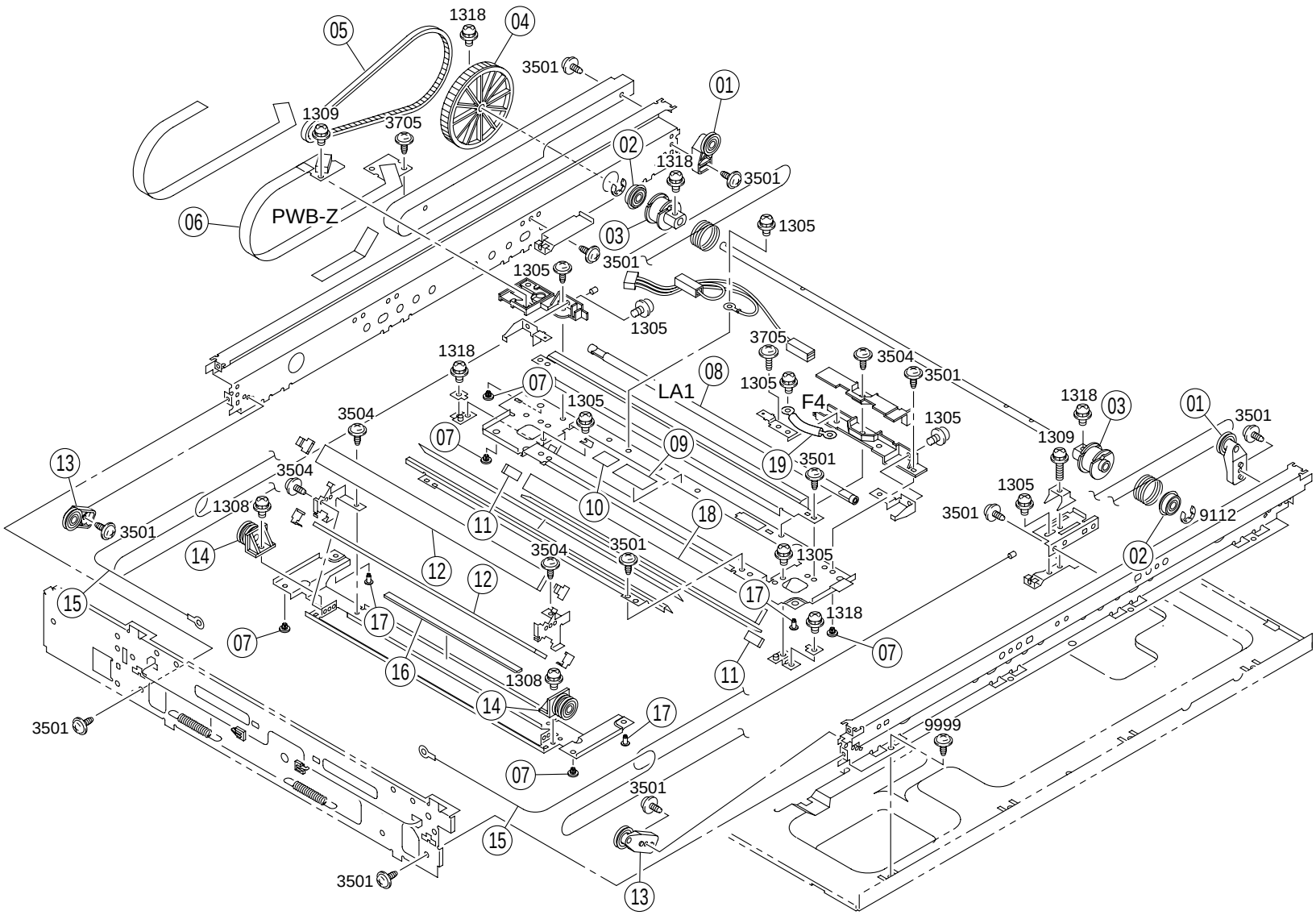
05
1318
04
3501
01
1309
3705
02
1318
3501
06
PWB-Z
03
1305
3501
1305
1305
3705
3504
3501
1318
08
07
LA1
1305
F4
1305
1318
03
01
3501
3504
07
1305
1309
09
19
3501
13
3504
1308
10
18
1305
3501
9112
3501
11
14
3504
3501
1305
02
12
12
15
17
17
1318
07
07
16
1308
11
14
17
3501
9999
07
3501
15
3501
13

INDEX	PART NO.	PART NAME	REC	QTY
01	4002-1462-01	PULLEY ASSY		2
02	4002-1456-01	BUSHING		2
03	4002-1452-01	PULLEY		2
04	4005-1453-02	PULLEY		1
05	4005-1454-01	TIMING BELT		1
06	4005-0126-01	PWB ASSY (PWB-Z)	RP	1
07	4002-1480-01	BUSHING		5
08	1154-6501-01	HALOGEN LAMP (LA1)	RP	1
09	4005-7303-01	LABEL		1
10	1129-7303-01	LABEL		1
11	1054-3841-01	HOLDER		2
12	4002-1422-02	MIRROR		2
13	4002-1461-01	PULLEY ASSY		2
14	4002-1424-01	PULLEY ASSY		2
15	4002-1451-01	WIRE		2
16	4005-1619-02	SEAL		1
17	4002-1481-01	BUSHING		3
18	4005-1409-01	MIRROR		1
19	4005-6881-02	WIRE HARNESS ASSY FUSE (F4)	RP	1

INDEX	PART NO.	PART NAME	REC	QTY	SFIX

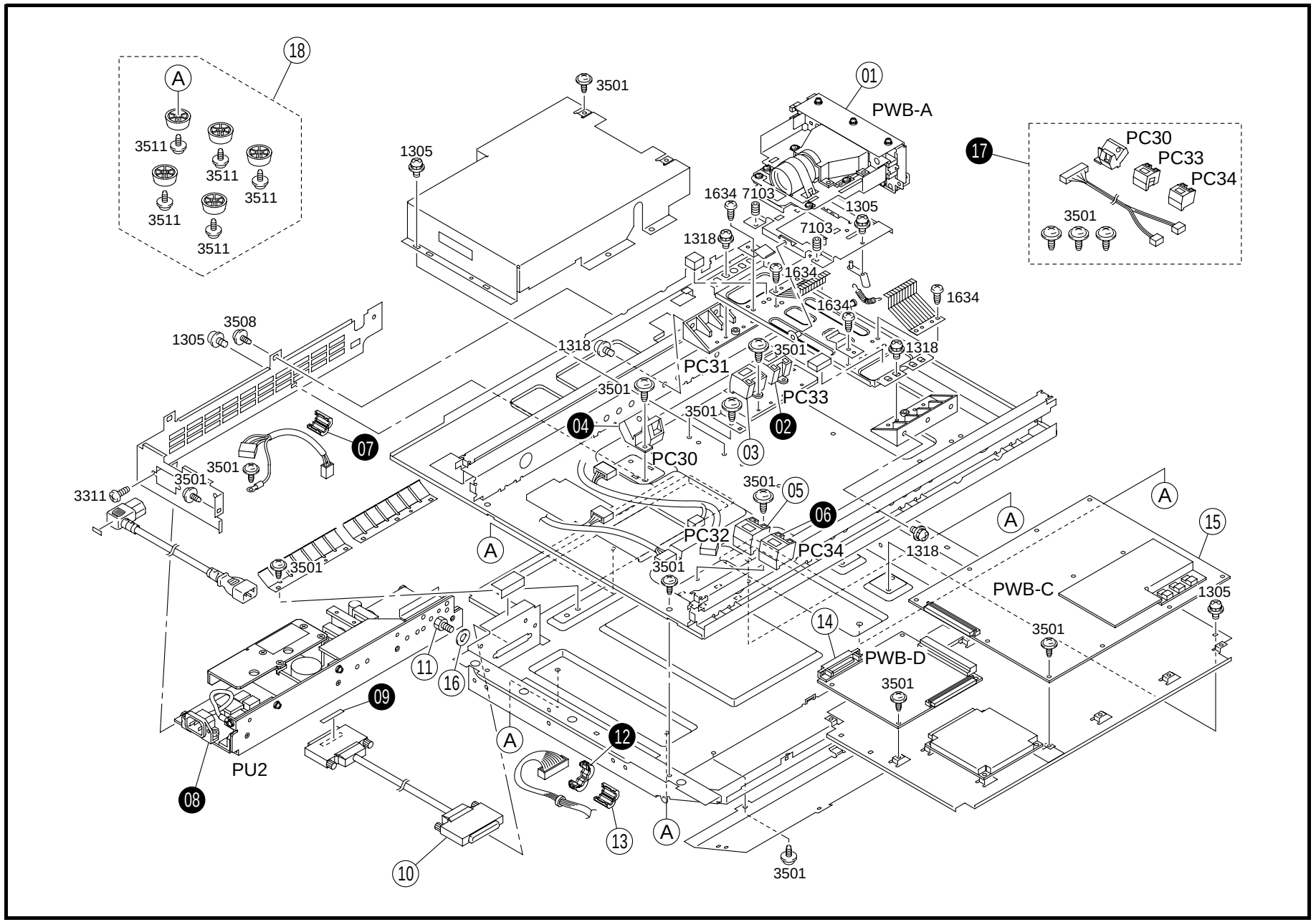
18
A
3511
3511
3511
3511
3511
3501
1305
01
PWB-A
17
PC30
PC33
PC34
3501
1634
7103
1305
7103
1318
1634
1634
1634
1634
3508
1305
1318
3501
1318
PC31
3501
PC33
3501
04
02
03
07
PC30
3501
3501
3311
3501
3501
05
06
PC32
PC34
1318
A
A
A
15
3501
PWB-C
1305
3501
14
PWB-D
3501
11
16
09
12
A
A
A
PU2
08
13
10
3501

INDEX	PART NO.	PART NAME		REC	QTY	INDEX	PART NO.	PART NAME	REC	QTY
01	4005-0311-03	CCD UNIT	(PWB-A)		1					
03	9335-1310-11	PHOTO INTERRUPTER	(PC31)		1					
05	9335-1910-81	SOLID STATE SWITCH	(PC32)		1					
10	4005-6815-03	WIRE HARNESS ASSY			1					
11	4005-6758-01	CONNECTOR ACCESSORY			2					
13	9326-1810-11	FERRITE CORE			1					
14	4005-0104-04	PWB ASSY	(PWB-D)	RP	1					
15	4005-0103-02	PWB ASSY	(PWB-C)	RP	1					
16	4005-1683-01	WASHER			2					
18	4005-0901-01	RUBBER FOOT KIT	OPTION		1					

INDEX	PART NO.	PART NAME		REC	QTY	SFIX
02	9335-1310-11	PHOTO INTERRUPTER	(PC33)		1	204, 214, 304, 314
04	9335-1910-71	SOLID STATE SWITCH	(PC30)		1	011, 201, 204, 211, 214, 303, 304, 313, 314
06	9335-1910-81	SOLID STATE SWITCH	(PC34)		1	204, 214, 304, 314
07	9326-1000-91	FERRITE CORE			1	011, 201, 211, 303, 313
08	4005-6201-01	POWER SUPPLY	(PU2)		1	011, 301, 303, 304, 311, 313, 314
08	4005-6202-01	POWER SUPPLY	(PU2)		1	201, 204, 211, 214
09	4005-7301-03	LABEL			1	301, 303, 304, 311, 313, 314
12	9326-1510-81	FERRITE CORE			1	201, 211, 303, 313
17	4005-0902-01	SIZE DETECTION KIT	OPTION (PC30.33.34)		1	011, 201, 211, 301, 303, 311, 313

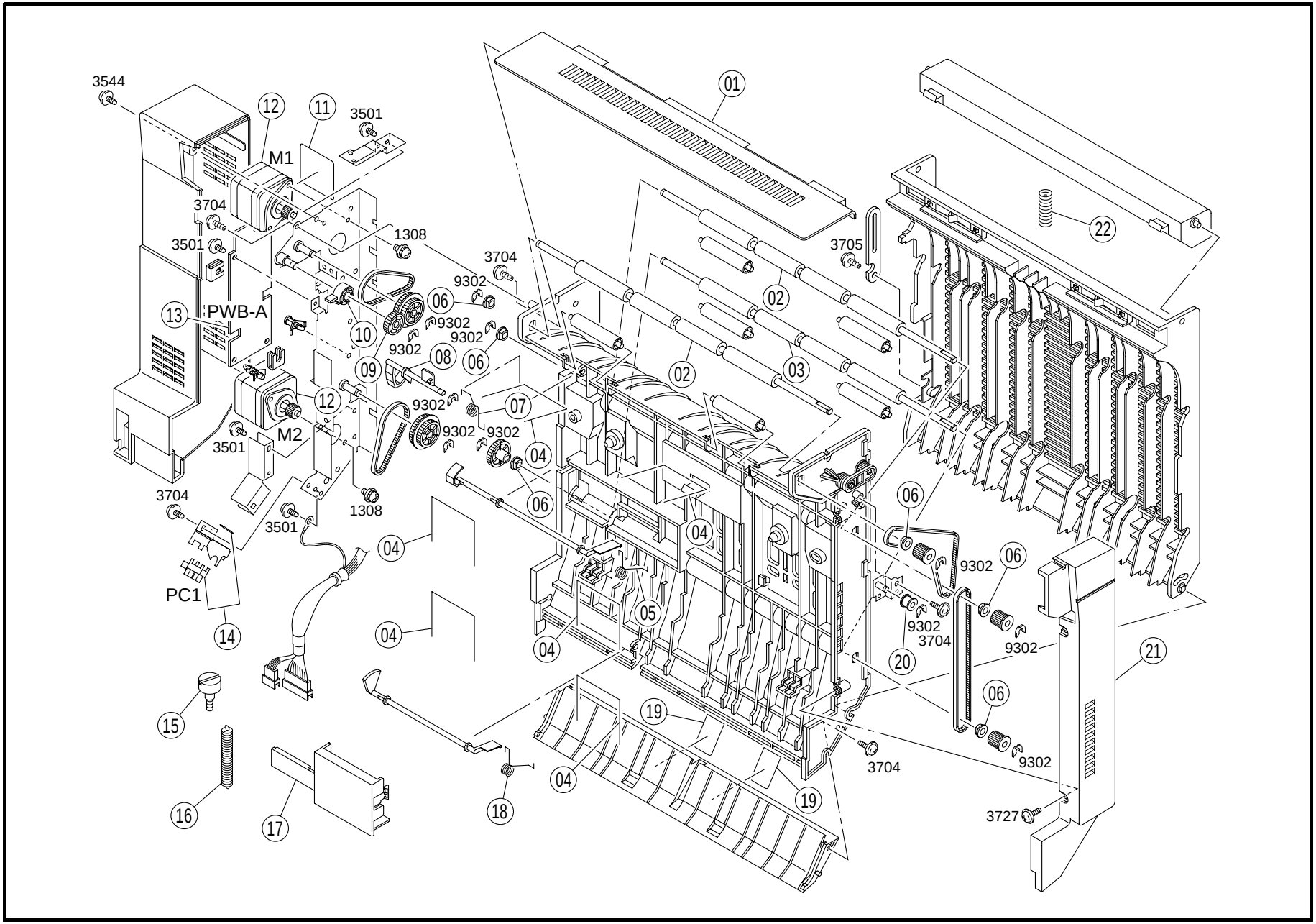
3544
12
11
3501
M1
3704
3501
1308
3704
9302
06
13
PWB-A
10
9302
9302
09
08
06
12
9302
07
M2
9302
9302
3501
04
3704
1308
06
3501
04
PC1
14
04
04
05
04
15
19
16
17
18
04
19
01
02
02
03
3705
22
06
9302
06
9302
3704
9302
20
21
06
9302
3704
3727

INDEX	PART NO.	PART NAME	REC	QTY
01	4657-3705-02	GUIDE		1
02	4657-3706-01	ROLLER		2
03	4657-3707-01	ROLLER		1
04	4497-3114-01	MEMBER		6
05	4657-3725-01	TORSION SPRING		1
06	1274-2611-01	BUSHING		6
07	4657-3734-01	TORSION SPRING		1
08	4657-3730-02	ACTUATOR		1
09	4657-3721-01	GEAR		1
10	4657-3723-02	RING		1
11	4657-3750-01	SEAL		1
12	9314-1001-01	MOTOR (M1.2)		2
13	4657-0101-01	PWB ASSY MAIN (PWB-A)		1
14	4002-0902-01	PHOTO INTERRUPTER TRANSPORT (PC1)		1
15	4657-3728-01	SHOULDER SCREW		2
16	4657-7501-01	TENSION SPRING		1
17	4657-3741-02	COVER		1
18	4657-3735-01	TORSION SPRING		1
19	4657-3751-01	GUIDE		2
20	4657-3714-01	ROLL		1
21	4657-3729-01	COVER		1
22	4497-3106-03	PRESSURE SPRING		1

INDEX	PART NO.	PART NAME	REC	QTY	SFIX

01 - 03 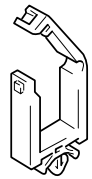	10 , 11 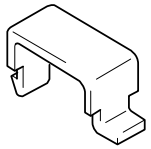	16 	22 , 23 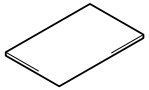	28 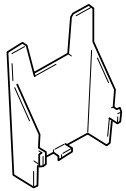			
04 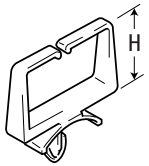	12 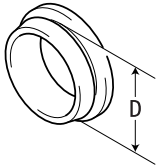	17 , 18 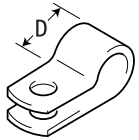	24 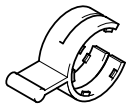	29 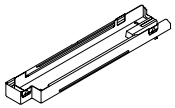			
05 , 06 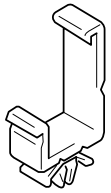	13 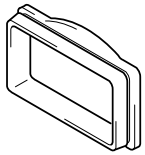	19 	25 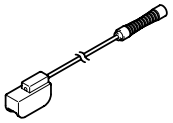	30 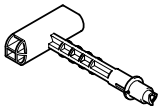			
07 	14 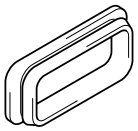	20 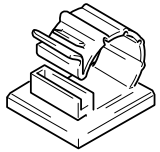	26 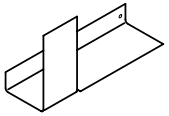				
08 , 09 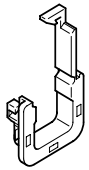	15 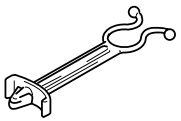	21 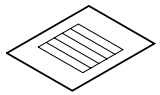	27 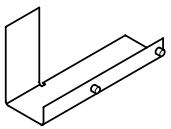				

INDEX	PART NO.	PART NAME	REC	QTY
01	9384-1211-01	WIRING SADDLE 19.2H		26
02	9384-1110-61	WIRING SADDLE 21.5H		12
03	9384-1310-11	WIRING SADDLE 5.2H		23
04	9384-1310-81	WIRING SADDLE 6.4H		58
05	9384-1311-01	WIRING SADDLE 27H		21
06	9384-1310-91	WIRING SADDLE 18.5H		13
07	9384-2010-21	EDGE COVER 8.5H		27
08	9384-2910-21	EDGE COVER		5
09	9384-2910-31	EDGE COVER		11
10	1053-4432-01	CORD CLAMP		1
11	1053-4812-01	CORD CLAMP		5
12	0721-4203-12	COLLAR 17D		1
13	1038-4006-01	INSULATING MEMBER		1
14	1050-4805-01	INSULATING MEMBER		1
15	9384-1911-11	SO CLIP		1
16	9384-1311-11	CABLE TIE 104L		5
17	9384-1000-91	RETAINER		2
18	9384-1000-61	CORD CLAMP		2
19	9384-1811-01	CORD CLAMP		2
20	9384-1001-01	CORD CLAMP		1
21	4004-7503-01	CLEANING PAD	RP	1
22	4004-0752-01	JIG MEMORY CARD CF2001	RP	1
23	4004-0753-01	JIG MEMORY CARD CF1501	RP	1
24	4002-7903-01	JIG WIRE CLIP	RP	1
25	4004-7502-01	CLANING MATERIAL	RP	1
26	4005-7901-01	JIG SLIDER POSITION RR	RP	1
27	4005-7902-01	JIG	RP	1
28	1156-7501-01	HOLDER SLIDER POSITION FNT		1
29	4004-5252-02	COVER		1
30	4004-0155-01	HANDLE BOTTOM		1

INDEX	PART NO.	PART NAME	REC	QTY	SFIX

INDEX	PART NO.	PART NAME	ILLUST
0203 0204 0222 0224 0250	9754-2010-08 9754-2012-08 9754-3022-08 9754-3018-08 9754-2016-08	SPRING ROLL PIN	
0501 0502 0508 0509 0510 0513 0526	9752-3016-50 9752-3012-50 9752-2010-50 9752-2012-50 9752-3014-50 9752-2014-50 9752-2016-50	PIN	
1104 1115	9642-2604-13 9642-0308-13	SCREW	
1208 1210	9644-0306-13 9644-0308-13	SCREW	
1305 1308 1309 1310 1311 1312 1313 1315 1318 1350 1356 1386	9646-0306-13 9646-0308-13 9646-0310-13 9646-0312-13 9646-0314-13 9646-0316-13 9646-0320-13 9646-0406-13 9646-0408-13 9646-0440-13 9646-0308-01 9646-0308-50	SCREW	
1409	9648-0308-21	SCREW	

INDEX	PART NO.	PART NAME	ILLUST
1603 1607 1608 1620 1634 1635	9654-0306-01 9654-0306-13 9654-0308-01 9654-0406-01 9654-0304-13 9654-0308-13	SCREW	
1715	9737-0306-07	SCREW	
1804	9659-0308-13	SCREW	
2703 2706 2713	9654-0406-14 9654-0408-14 9654-0306-14	SCREW	
3104	9656-0308-13	TAPPING SCREW	
3211	9657-0314-07	TAPPING SCREW	
3303 3305 3311	9732-0306-13 9732-0308-13 9732-0408-13	TAPPING SCREW	
3403	9733-0308-13	TAPPING SCREW	
3501 3502 3504 3505 3506 3508 3538 3541 3544	9735-0306-13 9735-0308-01 9735-0308-13 9735-0310-13 9735-0406-13 9735-0408-13 9735-0408-14 9735-0308-14 9735-0306-14	TAPPING SCREW	

INDEX	PART NO.	PART NAME	ILLUST
3701 3703 3704 3705 3709 3712 3714 3727 3902	9739-0408-13 9739-0412-13 9739-0308-13 9739-0306-13 9739-0310-13 9739-0406-13 9739-0312-13 9739-0308-14 9742-0306-01	TAPPING SCREW	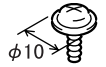
3906 3914 3920 3924 3928	9742-0306-13 9742-0308-07 9742-0408-14 9742-0308-14 9742-0325-13	TAPPING SCREW	
4012 4020 4024	9743-0306-13 9743-0408-14 9743-0410-14	TAPPING SCREW	
4305	9770-0408-13	TAPPING SCREW	
7101 7103 7104	9684-0303-08 9684-0306-08 9684-0308-08	SET SCREW	
8402 8403 8506 8508	9715-0300-01 9715-0400-01 9716-0400-01 9716-0400-13	WASHER	
9102 9105 9107 9112 9114 9125 9140	9721-0200-01 9721-0300-01 9721-0400-01 9721-0600-01 9721-0700-01 9721-0400-13 9721-0500-13	RETAINING RING	

INDEX	PART NO.	PART NAME	ILLUST
9301 9302 9303	1066-1151-01 4425-3001-01 4425-3002-01	RETAINING RING	

INDEX	PART NO.	PART NAME	ILLUST

INDEX	PART NO.	PART NAME	ILLUST

PART NO.	FIG.	INDEX	QTY
0721-4203-12	26	12	1
0816-6201-01	21	20	1
0966-5298-01	03	23	4
0978-3811-01	20	21	1
1038-4006-01	26	13	1
1050-4805-01	26	14	1
1053-1324-01	03	32	2
1053-3869-01	22	19	1
1053-4432-01	26	10	1
1053-4812-01	26	11	5
1054-3841-01	23	11	2
1065-1360-01	22	18	1
1100-1330-07	04	14	1
1100-1330-07	14	18	1
1100-1331-11	13	27	2
1100-1335-03	11	12	1
1129-7303-01	05	16	1
1129-7303-01	10	18	1
1129-7303-01	14	10	3
1129-7303-01	15	10	7
1129-7303-01	23	10	1
1139-1703-02	21	26	3
1139-1704-14	21	28	1
1139-1705-01	21	21	2
1139-1706-01	21	27	1
1139-1904-02	22	23	2
1139-1905-01	22	26	1
1139-1906-01	22	24	1
1139-5561-01	14	11	1
1144-1048-01	01	10	2
1144-3097-01	19	07	1
1144-3097-01	20	45	1
1144-5313-02	03	14	8
1144-5318-01	03	15	8
1151-7371-01	19	40	1
1151-7372-01	19	40	1
1154-1661-02	22	17	1
1154-1662-02	22	17	1
1154-1663-02	22	17	1
1154-4670-01	05	09	2
1154-6501-01	23	08	1
1156-7501-01	26	28	1
1159-1605-01	22	29	1
1159-1610-01	22	08	1
1164-0105-01	09	18	1
1164-0108-02	16	01	1
1164-1033-01	01	16	1
1164-3003-01	19	16	2
1164-3004-03	18	21	1
1164-3004-03	19	18	1
1164-3005-02	18	20	1
1164-3005-02	19	17	1
1164-3009-01	19	13	1
1164-3020-03	09	19	1
1164-3027-01	16	07	1
1164-3043-02	19	21	1
1164-3045-01	19	28	1
1164-3050-04	19	19	1
1164-3060-01	19	20	1
1164-3061-01	19	12	1
1164-3062-01	19	14	1
1164-3064-01	19	22	1
1164-3066-01	19	03	1
1171-1122-01	21	22	2
1171-1125-02	21	24	1
1171-1126-01	21	23	1
1179-1604-01	22	02	1
1200-1232-02	05	05	2
1200-1462-01	19	05	1
1200-2105-06	19	09	1
1200-3120-02	11	23	2
1200-3120-03	11	10	1
1200-3131-03	10	10	6
1200-3141-03	13	19	1
1200-3221-04	06	20	1
1250-2301-01	08	24	1
1274-2611-01	06	34	4
1274-2611-01	25	06	6
1274-3603-01	20	38	2
1300-4342-07	10	02	2
1300-4342-07	11	04	2
1400-2264-09	06	17	1
1500-2320-02	04	10	1
1500-2640-04	03	18	1
1500-2660-13	19	04	2
4002-0902-01	04	16	1
4002-0902-01	07	02	1
4002-0902-01	08	06	1
4002-0902-01	11	26	1
4002-0902-01	17	17	1
4002-0902-01	18	25	4
4002-0902-01	25	14	1
4002-1315-01	22	15	1
4002-1422-02	23	12	2
4002-1424-01	23	14	2
4002-1451-01	23	15	2
4002-1452-01	23	03	2
4002-1456-01	23	02	2
4002-1461-01	23	13	2
4002-1462-01	23	01	2
4002-1471-01	22	11	1
4002-1480-01	23	07	5
4002-1481-01	23	17	3
4002-7305-01	01	28	1
4002-7306-01	20	13	1
4002-7308-01	19	35	1
4002-7308-01	20	30	1
4002-7319-01	19	35	1
4002-7319-01	20	30	1
4002-7903-01	26	24	1
4004-0101-04	04	15	1
4004-0105-03	15	11	3
4004-0109-01	02	05	1
4004-0110-03	05	12	1
4004-0111-03	05	13	1
4004-0116-02	15	14	1
4004-0117-04	04	15	1
4004-0118-01	04	15	1
4004-0119-01	04	15	1
4004-0154-02	08	25	1
4004-0155-01	26	30	1
4004-0156-02	08	12	1
4004-0317-02	07	07	1
4004-0322-02	05	14	1
4004-0323-02	05	15	1
4004-0324-02	09	09	4
4004-0331-03	15	20	1
4004-0347-01	01	12	1
4004-0361-02	15	20	1
4004-0751-01	11	22	1
4004-0752-01	26	22	1
4004-0753-01	26	23	1
4004-0754-02	06	25	1
4004-0755-01	16	06	1
4004-0756-02	16	03	1
4004-0757-02	16	05	1
4004-0758-01	09	04	1
4004-0901-02	15	01	4
4004-0902-01	08	17	1
4004-0903-01	09	05	1
4004-0904-01	10	20	2
4004-1001-03	01	24	1
4004-1002-03	01	33	1
4004-1003-02	01	31	1
4004-1004-03	01	30	1
4004-1005-03	01	18	1
4004-1006-04	01	05	1
4004-1007-02	01	13	1
4004-1008-03	01	02	1
4004-1009-03	01	07	1
4004-1011-01	01	17	2
4004-1013-03	01	14	1
4004-1014-01	01	15	1
4004-1015-02	01	19	1
4004-1016-02	05	02	1
4004-1023-02	02	09	2
4004-1024-01	02	02	2
4004-1025-03	02	03	2
4004-1027-02	01	22	1
4004-1028-04	01	04	1
4004-1031-03	01	25	1
4004-1032-02	01	32	1
4004-1033-03	01	03	1
4004-1035-01	01	01	2
4004-1038-01	01	09	1
4004-1041-01	03	20	1
4004-1053-02	02	08	1
4004-1060-02	09	17	1
4004-1061-02	09	14	1
4004-1065-02	09	15	1
4004-1068-01	01	34	1
4004-1807-01	15	03	8
4004-1812-01	15	08	4
4004-1823-01	02	16	1
4004-1826-03	02	13	4
4004-1829-02	02	10	4
4004-1831-01	02	20	1
4004-1832-01	02	17	1
4004-1833-03	02	19	4
4004-1834-02	02	18	4
4004-1835-02	02	21	1
4004-1836-02	02	15	1
4004-1837-03	02	14	1
4004-1838-02	02	12	4
4004-1842-01	02	11	4
4004-2055-02	13	05	2
4004-2056-01	13	01	2
4004-2063-01	13	03	2
4004-2070-03	13	02	1
4004-2071-03	13	14	1
4004-2101-03	01	20	1
4004-2142-01	09	12	1
4004-2148-01	09	11	1
4004-2163-01	04	02	1
4004-2203-01	05	01	2
4004-2206-01	05	07	4
4004-2215-01	14	19	1
4004-2216-01	14	17	2
4004-2221-01	15	18	1
4004-2236-01	14	35	3
4004-2239-03	04	13	1
4004-2242-02	10	25	1
4004-2248-02	11	13	1
4004-2263-01	05	03	1
4004-2303-02	16	02	9
4004-2309-01	16	04	18
4004-2311-01	10	14	1
4004-2312-01	10	19	1
4004-2313-01	10	15	1
4004-2314-01	10	16	1
4004-2315-01	10	17	1
4004-2316-01	10	22	1
4004-2317-01	10	23	4
4004-2317-01	15	06	5
4004-2401-01	15	04	12
4004-2404-01	15	07	4
4004-2501-03	09	06	4
4004-2507-02	09	08	4
4004-2513-02	10	12	1
4004-2514-02	10	31	1
4004-2515-02	10	28	1
4004-2517-02	10	27	1
4004-2519-01	10	26	1
4004-2521-01	10	30	1
4004-2523-01	10	29	1
4004-2538-01	10	05	1
4004-2540-01	10	07	1
4004-2542-02	10	01	1
4004-2543-02	10	06	1
4004-2544-01	10	03	1
4004-2545-01	10	11	2
4004-2547-01	10	04	2
4004-2552-01	11	16	1
4004-2553-02	11	17	1
4004-2554-01	11	18	1
4004-2555-01	11	31	1
4004-2560-01	11	09	1
4004-2561-01	11	08	1
4004-2564-02	11	05	1
4004-2565-01	11	07	1
4004-2569-01	11	24	1
4004-2570-02	11	25	1
4004-2571-01	11	20	1
4004-2577-01	11	27	1
4004-2580-01	11	19	1
4004-2582-01	11	06	1
4004-2585-02	11	30	1
4004-2586-01	11	29	1
4004-2587-02	11	03	1
4004-2594-01	09	07	4
4004-2602-03	13	16	1
4004-2603-02	13	20	1
4004-2604-01	13	17	1
4004-2605-02	13	18	1
4004-2606-03	13	15	1
4004-2608-02	13	10	1
4004-3002-01	19	02	1
4004-3003-02	19	10	1
4004-3004-01	19	08	1
4004-3006-02	19	06	1
4004-3007-01	19	01	2
4004-3008-01	19	37	1
4004-3012-01	10	21	1
4004-3021-02	19	32	1
4004-3022-02	19	25	1
4004-3023-01	19	30	1
4004-3024-01	19	39	1
4004-3028-01	19	24	1
4004-3031-01	19	33	1
4004-3032-01	19	27	2
4004-3038-01	19	38	1
4004-3040-02	19	15	1
4004-3041-01	17	05	1
4004-3042-01	19	29	1
4004-3072-03	02	25	1
4004-3073-02	02	24	1
4004-3074-01	02	25	1
4004-3210-02	07	06	1
4004-3501-02	08	13	1
4004-3502-02	08	10	1

PART NO.	FIG.	INDEX	QTY		PART NO.	FIG.	INDEX	QTY		PART NO.	FIG.	INDEX	QTY		PART NO.	FIG.	INDEX	QTY	
4004-3505-05	08	02	1		4004-5399-02	03	28	1		4004-6790-01	15	02	4		4005-1663-01	22	09	1	
4004-3507-04	14	04	1		4004-5401-02	03	27	1		4004-6791-01	15	13	4		4005-1664-01	22	25	1	
4004-3511-02	13	13	1		4004-5402-02	03	26	1		4004-6792-01	14	29	1		4005-1665-01	22	25	1	
4004-3512-02	13	12	1		4004-5403-02	03	03	4		4004-6845-01	05	11	1		4005-1666-01	22	25	1	
4004-3516-02	11	28	1		4004-5404-01	03	02	8		4004-6846-01	05	10	1		4005-1683-01	24	16	2	
4004-3517-01	11	21	1		4004-5405-02	03	25	8		4004-7301-01	01	29	1		4005-1722-01	22	13	1	
4004-3518-03	11	01	1		4004-5601-02	14	16	1		4004-7302-03	01	26	1		4005-1909-01	22	27	1	
4004-3519-03	08	22	1		4004-5604-01	14	27	4		4004-7303-02	01	21	1		4005-6201-01	24	08	1	
4004-3520-02	08	04	1		4004-5605-01	14	26	4		4004-7304-02	01	27	1		4005-6202-01	24	08	1	
4004-3533-03	14	01	1		4004-5606-02	14	25	1		4004-7305-02	06	07	1		4005-6758-01	05	04	2	
4004-3536-02	08	15	1		4004-5607-02	14	13	1		4004-7306-01	19	36	1		4005-6758-01	24	11	2	
4004-3537-02	08	20	1		4004-5609-01	14	21	1		4004-7309-01	06	08	1		4005-6815-03	24	10	1	
4004-3538-01	14	09	1		4004-5610-01	14	24	1		4004-7310-01	06	08	1		4005-6881-02	23	19	1	
4004-3542-03	08	21	1		4004-5611-01	14	23	1		4004-7311-01	07	01	1		4005-7301-03	24	09	1	
4004-3544-03	08	19	1		4004-5612-01	14	12	1		4004-7312-01	07	01	1		4005-7303-01	23	09	1	
4004-3550-02	08	03	1		4004-5613-01	14	22	1		4004-7313-01	19	31	1		4005-7901-01	26	26	1	
4004-3551-01	08	18	1		4004-5736-01	13	25	1		4004-7314-01	19	26	1		4005-7902-01	26	27	1	
4004-3556-02	14	06	1		4004-5739-03	13	22	1		4004-7317-01	12	01	2		4108-3079-01	02	23	1	
4004-3557-02	14	05	1		4004-5740-03	13	30	1		4004-7318-01	13	28	2		4122-0901-01	06	42	1	
4004-3558-02	14	32	1		4004-5753-03	13	26	1		4004-7322-01	01	29	1		4143-3761-01	09	16	1	
4004-3560-03	14	34	1		4004-5871-02	13	24	1		4004-7324-01	19	23	1		4143-3762-01	09	13	1	
4004-3563-01	14	33	1		4004-5872-02	13	29	1		4004-7325-01	13	23	2		4490-3210-02	06	10	2	
4004-3568-03	08	11	1		4004-5901-04	06	09	1		4004-7329-01	14	28	1		4497-3106-03	25	22	1	
4004-3579-01	11	32	1		4004-5903-01	06	50	4		4004-7330-01	14	20	1		4497-3114-01	25	04	6	
4004-3583-02	13	34	1		4004-5908-01	06	43	1		4004-7333-01	01	23	1		4497-3116-01	07	05	2	
4004-3592-01	04	17	1		4004-5910-01	06	29	1		4004-7401-01	21	16	1		4498-0102-01	02	22	1	
4004-3597-01	08	01	1		4004-5911-02	06	24	2		4004-7402-01	21	15	1		4498-3325-01	20	27	1	
4004-4510-01	12	02	1		4004-5912-01	06	38	1		4004-7403-02	01	06	1		4498-3388-01	17	14	1	
4004-4527-02	12	03	1		4004-5913-01	06	37	1		4004-7405-01	01	11	1		4498-3404-01	20	28	1	
4004-4532-01	09	01	1		4004-5915-02	06	35	1		4004-7407-01	01	06	1		4498-3469-01	20	11	2	
4004-4533-01	09	02	1		4004-5916-03	06	05	1		4004-7502-01	26	25	1		4498-3804-01	20	34	1	
4004-4543-02	14	30	1		4004-5917-03	06	47	1		4004-7503-01	26	21	1		4498-3823-01	20	32	1	
4004-4544-02	14	31	1		4004-5919-01	06	19	1		4005-0103-02	24	15	1		4498-3825-01	20	33	1	
4004-4546-02	14	08	2		4004-5922-01	06	15	1		4005-0104-04	24	14	1		4498-3828-01	20	08	1	
4004-4547-02	14	07	2		4004-5926-01	06	51	1		4005-0105-03	22	05	1		4498-3834-01	20	26	2	
4004-4555-02	14	15	1		4004-5928-01	06	33	1		4005-0111-02	21	01	1		4603-3214-01	07	03	1	
4004-4558-02	14	14	1		4004-5929-01	06	12	1		4005-0112-02	21	01	1		4641-0901-01	22	14	1	
4004-4576-02	13	04	3		4004-5931-01	06	14	1		4005-0126-01	23	06	1		4657-0101-01	25	13	1	
4004-4577-04	13	08	3		4004-5932-01	06	13	1		4005-0158-02	22	28	1		4657-3705-02	25	01	1	
4004-4578-03	13	06	2		4004-5933-01	06	18	1		4005-0159-02	22	28	1		4657-3706-01	25	02	2	
4004-4579-03	13	11	1		4004-5935-01	06	22	1		4005-0160-02	22	28	1		4657-3707-01	25	03	1	
4004-4580-02	13	09	3		4004-5939-01	06	32	1		4005-0311-03	24	01	1		4657-3714-01	25	20	1	
4004-4707-01	13	07	2		4004-5943-05	06	02	1		4005-0751-01	22	04	1		4657-3721-01	25	09	1	
4004-4711-02	08	08	1		4004-5947-02	06	01	1		4005-0752-01	22	04	1		4657-3723-02	25	10	1	
4004-4724-02	08	16	1		4004-5948-01	06	16	1		4005-0753-01	22	04	1		4657-3725-01	25	05	1	
4004-5252-02	26	29	1		4004-5949-01	06	28	1		4005-0901-01	24	18	1		4657-3728-01	25	15	2	
4004-5282-01	15	09	6		4004-5950-01	06	23	8		4005-0902-01	24	17	1		4657-3729-01	25	21	1	
4004-5283-01	15	05	15		4004-5951-01	06	27	1		4005-1107-01	21	10	1		4657-3730-02	25	08	1	
4004-5287-01	15	12	3		4004-5952-01	06	21	1		4005-1108-01	21	14	1		4657-3734-01	25	07	1	
4004-5348-02	03	22	8		4004-5968-01	06	44	1		4005-1110-02	21	02	1		4657-3735-01	25	18	1	
4004-5349-01	03	21	4		4004-5969-01	06	39	1		4005-1316-01	22	16	1		4657-3741-02	25	17	1	
4004-5351-01	03	16	2		4004-5970-01	06	40	1		4005-1391-04	21	07	1		4657-3750-01	25	11	1	
4004-5371-03	03	13	1		4004-5971-01	06	41	1		4005-1392-03	21	08	1		4657-3751-01	25	19	2	
4004-5372-02	03	09	1		4004-5972-01	06	03	1		4005-1393-04	21	18	1		4657-7501-01	25	16	1	
4004-5378-02	03	05	4		4004-5974-02	06	26	8		4005-1394-03	21	12	1		4658-0101-04	17	03	1	
4004-5379-02	03	31	4		4004-5975-01	06	11	1		4005-1395-03	21	03	1		4658-0102-01	17	13	1	
4004-5380-02	03	29	1		4004-5978-03	06	49	1		4005-1396-03	21	17	1		4658-0151-01	19	11	1	
4004-5382-01	03	30	4		4004-5979-01	06	04	1		4005-1397-02	21	11	1		4658-0151-01	20	03	1	
4004-5383-01	03	01	4		4004-5980-02	06	48	1		4005-1398-03	21	19	1		4658-1001-03	19	34	1	
4004-5387-01	03	04	8		4004-5987-01	06	36	1		4005-1399-03	21	04	1		4658-1001-03	20	29	1	
4004-5389-03	03	12	1		4004-5988-01	06	45	1		4005-1400-02	21	09	1		4658-1003-01	02	26	1	
4004-5390-03	03	11	1		4004-5990-02	06	30	1		4005-1401-01	21	05	1		4658-1003-01	20	36	1	
4004-5391-03	03	10	1		4004-5991-03	06	46	1		4005-1402-01	21	06	1		4658-3002-01	20	43	1	
4004-5392-02	03	08	1		4004-5993-01	11	02	1		4005-1409-01	23	18	1		4658-3005-01	20	06	1	
4004-5393-02	03	07	1		4004-5996-01	06	31	1		4005-1453-02	23	04	1		4658-3006-01	20	07	1	
4004-5394-02	03	06	1		4004-5997-02	06	06	1		4005-1454-01	23	05	1		4658-3007-01	20	05	1	
4004-5395-02	03	28	1		4004-6056-01	05	06	2		4005-1619-02	22	07	3		4658-3008-01	20	40	1	
4004-5396-02	03	27	1		4004-6203-01	04	07	1		4005-1619-02	23	16	1		4658-3009-01	20	35	1	
4004-5397-02	03	26	1		4004-6207-02	04	03	1		4005-1620-01	22	20	1		4658-3010-02	20	16	1	
4004-5398-02	03	29	1		4004-6208-02	04	03	1		4005-1662-01	22	10	2		4658-3011-01	20	31	1	

PART NO.	FIG.	INDEX	QTY	
4658-3012-01	20	09	1	
4658-3013-01	20	19	1	
4658-3014-01	20	20	1	
4658-3015-01	20	18	2	
4658-3016-01	20	10	2	
4658-3022-02	20	22	1	
4658-3023-02	20	25	1	
4658-3024-02	20	23	1	
4658-3025-01	20	24	1	
4658-3027-01	20	41	1	
4658-3028-01	20	42	1	
4658-3034-01	20	46	1	
4658-3036-01	20	02	1	
4658-3037-01	20	44	1	
4658-3041-01	20	12	4	
4658-3045-01	20	04	2	
4658-3046-01	20	37	2	
4658-3047-01	18	07	1	
4658-3047-01	20	01	1	
4658-3048-01	20	14	2	
4658-3049-01	20	15	2	
4658-3050-01	20	47	2	
4658-3112-01	18	31	1	
4658-3116-01	17	07	1	
4658-3117-01	17	09	1	
4658-3118-01	17	08	1	
4658-3125-01	18	28	1	
4658-3126-01	18	24	1	
4658-3129-01	17	12	1	
4658-3130-01	18	30	1	
4658-3133-02	17	04	1	
4658-3134-01	18	27	1	
4658-3140-02	17	02	3	
4658-3141-02	18	02	1	
4658-3147-01	18	26	1	
4658-3149-01	18	05	7	
4658-3152-01	17	11	1	
4658-3160-01	17	10	1	
4658-3203-01	18	19	1	
4658-3204-01	18	15	1	
4658-3205-01	18	13	1	
4658-3207-01	18	14	1	
4658-3209-01	18	22	1	
4658-3210-01	18	12	1	
4658-3501-01	18	29	1	
4658-3503-01	18	11	1	
4658-3504-01	18	10	1	
4658-3505-02	18	01	1	
4658-3506-01	18	08	2	
4658-3507-01	17	15	1	
4658-3510-01	17	16	1	
4658-3511-01	18	06	2	
4658-3513-01	18	04	3	
4658-3514-01	18	03	6	
4658-3516-01	18	17	1	
4658-3517-01	18	23	2	
4658-3518-01	18	09	2	
4658-7301-01	20	39	1	
4658-7302-01	20	17	2	
4697-101	14	36	1	
4697-111	13	31	1	
4697-121	13	31	1	
4697-131	13	31	1	
4697-141	13	32	1	
4697-151	13	33	1	
4697-161	12	04	1	
4697-171	08	05	1	
9313-1000-61	04	01	2	
9313-1000-61	22	01	2	
9313-1000-72	09	10	1	
9313-1000-82	22	06	1	
9313-1910-61	08	23	1	
9314-1000-11	18	18	1	
9314-1000-21	13	21	1	
9314-1000-31	09	03	1	
9314-1001-01	25	12	2	
9314-1910-11	03	17	2	
9314-1910-81	22	12	1	
9314-2000-21	10	09	1	
9314-2000-31	11	11	1	
9322-1000-21	10	13	1	
9322-1000-21	18	16	1	
9322-1000-41	07	04	1	
9322-1000-51	08	09	1	
9322-1000-61	08	07	1	
9323-1410-11	02	04	1	
9326-1000-91	15	16	1	
9326-1000-91	24	07	1	
9326-1001-01	15	15	8	
9326-1510-81	24	12	1	
9326-1810-11	24	13	1	
9326-1810-51	10	24	1	
9326-1910-21	04	04	2	
9326-2820-11	21	25	1	
9331-1810-21	02	06	1	
9331-2710-11	03	19	1	
9331-2710-11	04	12	1	
9331-2710-11	11	14	1	
9332-1000-11	17	06	3	
9332-1710-61	17	01	1	
9332-1910-21	15	19	1	
9332-5810-11	02	01	1	
9334-2610-11	03	24	4	
9334-2610-11	22	21	1	
9335-1310-11	24	02	1	
9335-1310-11	24	03	1	
9335-1310-41	22	22	1	
9335-1410-31	02	07	1	
9335-1910-11	08	14	1	
9335-1910-61	15	17	1	
9335-1910-71	24	04	1	
9335-1910-81	24	05	1	
9335-1910-81	24	06	1	
9341-2000-11	04	06	1	
9367-4510-31	05	08	1	
9372-1000-21	14	02	2	
9372-5910-11	14	03	1	
9381-4810-31	04	05	1	
9381-4810-61	04	05	1	
9381-4911-01	04	05	1	
9383-2510-21	04	09	1	
9383-5000-11	04	08	1	
9384-1000-61	26	18	2	
9384-1000-91	26	17	2	
9384-1001-01	26	20	1	
9384-1110-61	26	02	12	
9384-1211-01	26	01	26	
9384-1310-11	26	03	23	
9384-1310-81	26	04	58	
9384-1310-91	26	06	13	
9384-1311-01	26	05	21	
9384-1311-11	26	16	5	
9384-1621-21	04	11	3	
9384-1811-01	26	19	2	
9384-1900-55	10	08	1	
9384-1900-55	11	15	1	
9384-1900-57	22	03	3	
9384-1911-11	26	15	1	
9384-2010-21	26	07	27	
9384-2310-41	01	08	1	
9384-2310-41	21	13	1	
9384-2910-21	26	08	5	
9384-2910-31	26	09	11	