I Overview

1. Product Concept

2. Specifications

3. System Configuration

4. Paper Path

1. Product Concept (1)

- High Speed & High Productivity MFP corresponding to the demands of the color users in the offices
- High image Quality Color MFP corresponding to the demands of the color graphic users
- Target Market/ Users
  - Office Color Users making a large amount of color output such as Planning, Marketing/Sales, Advertising etc.
  - Graphic Users demanding high speed color output
  - CRD, PFP

Product Concept (2)

High Image Quality	High Image Quality at the top of the class of the Tandem-Configured Color Products: Adoption of the following New Technology - Color Conversion Technology - Accurate Color Shifting Correction: LPH Linearity Correction - Polymerized Toner
High Productivity	Color/Monochrome: 31CPM (A4C)
High Functionality	- Electronic Color Sorting first introduced in the industry - Color Multiple Job Processing Function first introduced in the industry (Color Multiple Jobs, Color Job Management) - Center Stapling Finishing Function
Easy Operation	- Complied with Universal Design: Adjustable Viewing Angle of the Operation Panel (7/27/45 Degrees) - Large Size Operation Panel - High Serviceability: PM replacement items reduced, Life Extended
Ecology - Friendliness	Complied with Energy Star, BAM

2. Specifications

Major Specifications

- 2-component Magnetic Brush Developing (Non-contact) System
- Resolution
  - Reading: 600 dpi, Writing: 600 x 1800 dpi
- Copy Paper Type
  - Plain Paper, Thick Paper 1 to 3 (91 to 256 g/m^2, 24 ¼ to 68lb), OHP Sheet, Post Card, Envelopes, Labels
- Warm-Up Time: 5 min. or less
- First Copy Time (Full Color/Mono Color: A4C, Full Size, fed from 1st Tray)
  - 9.9/7.9 sec.
- Multiple-Copying Speed (Full Color/Mono Color, A4C)
  - 31/31 CPM
- Multiple Copy: 1 to 999 copies
- Toner Cartridge System
- Average CV/M (Full Color/Mono Color, A4C)
  - 5K/1K (for Metric areas), 6.5K/1.5K (for Inch areas)

Specification Detail 

3. System Configuration

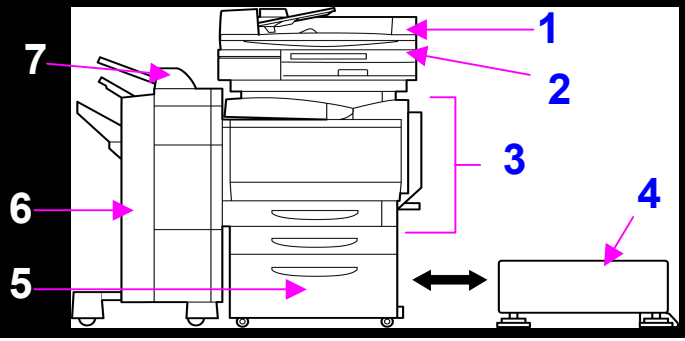

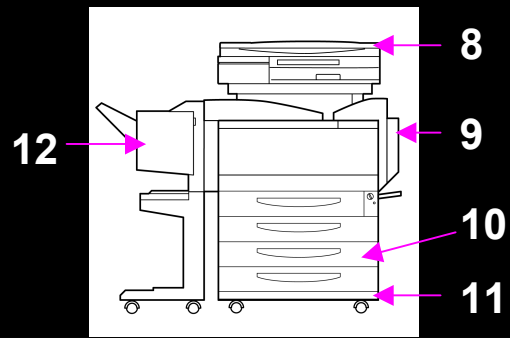

1	Duplexing Document Feeder DF-332	9	Duplex Unit AD-231	17	Printer Controller IP-711*
2	Scanner Section SN-232	10	Paper Feed Unit PF-232	18	Mechanical Counter*
3	Printer Engine Section 7831	11	Copy Table DK-134	19	Plug-In Counter Installation Kit*
4	Copy Desk DK-133	12	Finisher FS-231	20	Fiery X3e 31C-M
5	Large Capacity Tray DB-432	13	Copier Stand DK-232	21	VI-635
6	Finisher FS-135	14	Punch Kit PK-131*	22	Dehumidifying Heater 1A (For Cassette) / 1B (For LCT)*
7	Option Tray FT-331	15	Memory MU-433* Standard :U.S.A,CANADA		
8	Original Cover CV-131	16	Hard Disk Drive HD-131*		

*No illustration is provided due to the unit being embedded.

- Conductive Glass is now included as a standard accessory and ADF Kit is no longer available as an optional accessory.

4. Paper Path

