8. Fusing Section

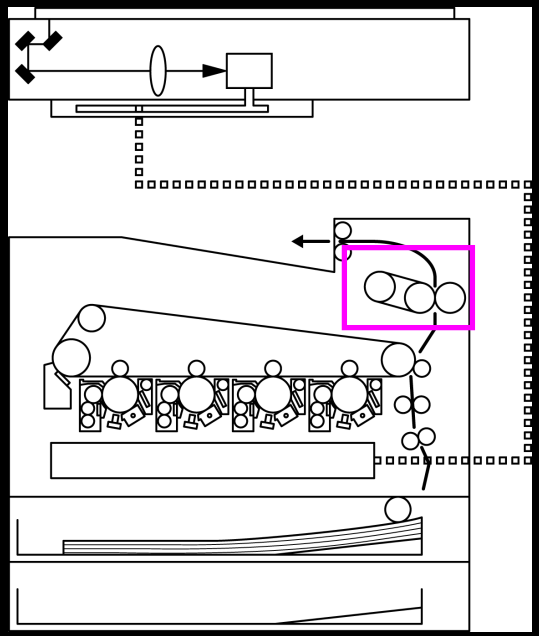

1. Improvements
2. Component Identification
3. Fusing Unit Drive Speed Control
4. Lower Fusing Roller Pressure/Retraction
5. Fusing Temperature Control

8.1 Improvements

Web Unit	No Longer Needed
Oil Cleaning Roller	No Longer Needed Oil application mechanism discontinued with adoption of Polymerized Toner
Material of the Fusing Belt	Ni + Si Rubber+ PFA (Fluorine type) Surface Layer
Materials of the Pressure Roller	Metal Core + Si Rubber + PFA Surface Layer -Longer Life / Better Toner Separation (PFA Surface Layer gives stiffness to the Belt and improves toner separation performance.)
Pressure Roller Thermistor	Non-contact Type - Longer Life

Improvements

Heating Roller Diameter	35 mm
Nip Width	9 mm (For higher speed)
Fusing Roller (Sponge part)	6 mm (Better heating efficiency, Nip width ensured)
Pressure Roller (Rubber Thickness)	2.5 mm
Fusing Speed Detection	Paper Loop Amount Sensor in Fusing Unit provides better Paper Transport Accuracy in Fusing Unit
Fusing Unit Drive	Pressure Roller - Longer life

8.2 Component Identification

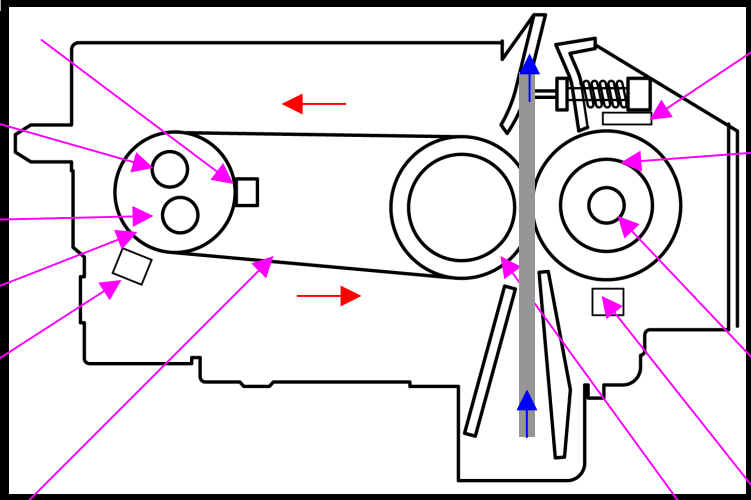

Fusing Unit

8.3 Fusing Unit Drive Speed Control

8031

Type of Paper	Fuser Unit Drive Speed
Plain Paper	135m/s
Plain Paper: Glossy Mode, Thick Paper1/2/3, OHP, Envelopes	60 mm/s

Paper Loop Amount Control

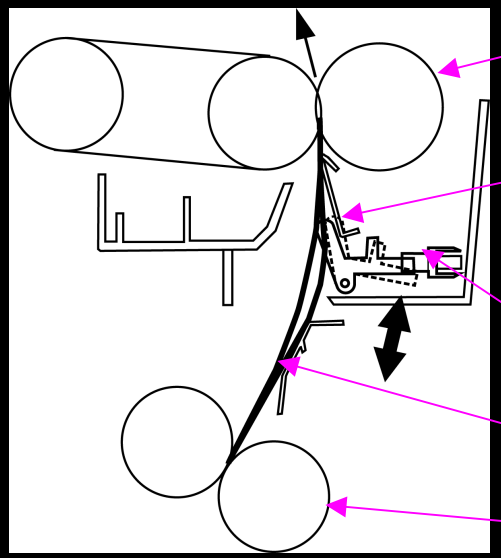

Fusing Unit Drive

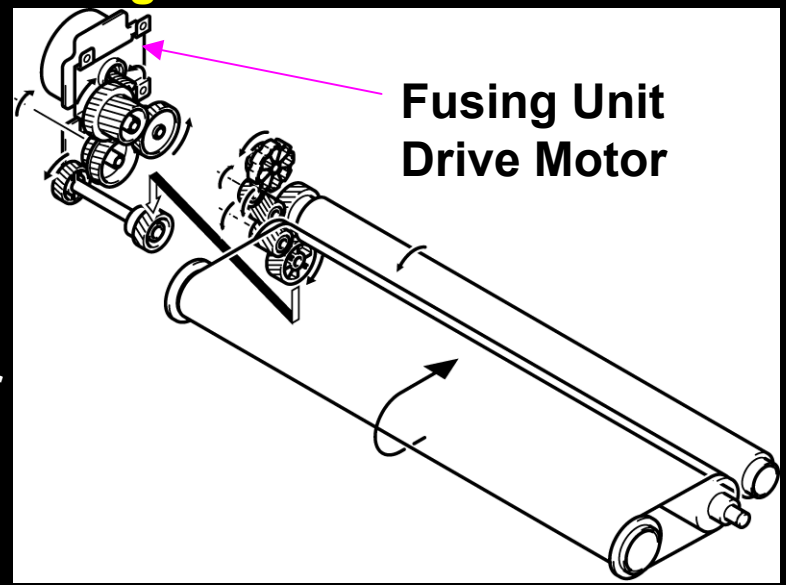

8.4 Lower Fusing Roller Pressure/Retraction

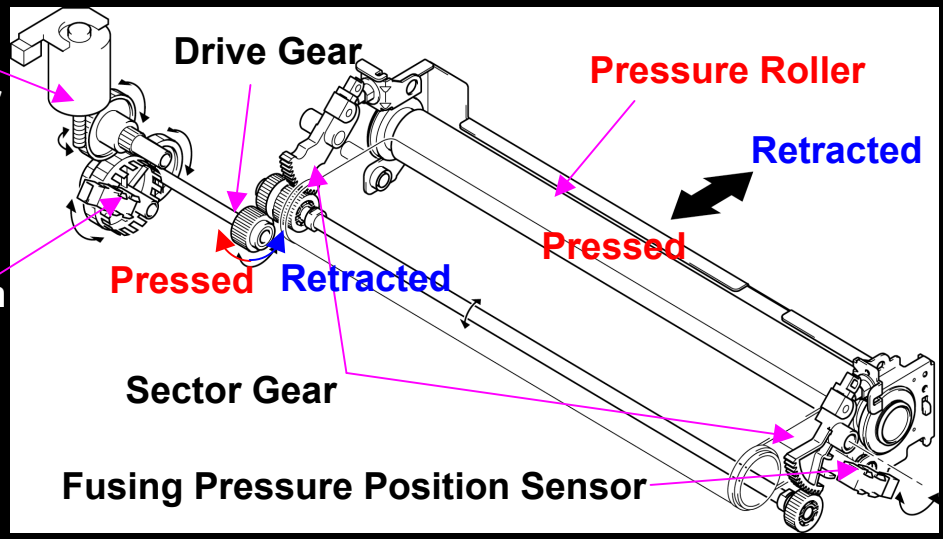

Retract Position

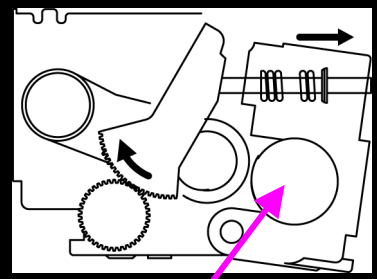

Pressure/Retraction Timing

Conditions		Pressure/Retraction Operation
Power Switch ON	If not in retracted position	Pressed >> Retracted
Warm-up	Start	Retracted >> Pressed
	End	Pressed >> Retracted
In standby		Retracted
Print cycle	Start	Retracted >> Pressed
	End	Pressed >> Retracted

Pressure Position

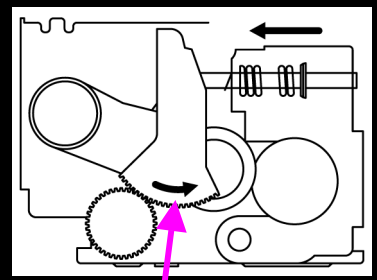

8.5 Fusing Temperature Control (1)

Temperature Control in each mode

Mode	Heater Lamp	Detected by	Set Temperature
During a Copy Cycle	Heating Roller Heater Lamp 1	Heating Roller Thermistor	Large size CD width 217 mm or more (degree C) >> See "Fusing Temperature Control (2)"
	Heating Roller Heater Lamp 2		Small size CD width 216 mm or less Set Temperature are the same as above.
	Pressure Roller Heater Lamp	Pressure Roller Thermistor	130 degree C (Color OHP: 180 degree C)
In the Standby State	Heating Roller Heater Lamp 1	Heating Roller Thermistor	190 degree C
	Pressure Roller Heater Lamp	Pressure Roller Thermistor	170 degree C
In the Low Power State	Heating Roller Heater Lamp 1	Heating Roller Thermistor	160 degree C
	Pressure Roller Heater Lamp	Pressure Roller Thermistor	170 degree C

Fusing Temperature Control (2)

Set Temperature for each paper type (degree C)

Paper Type	Mode		
Plain Paper	Color	185	
	Bk	185	
Thick 1	Color/Bk	185	
Thick 2	Color/Bk	185	
Thick 3	Color/Bk	185	
OHP	Color	200	
	Bk	190	
Envelope	Color/Bk	185	

Fusing Temperature Control (3)

Warm-up Operation

Power Switch: ON

↓

Pressure Roller Retracted

↓

Pressure Roller Heater ON >> OFF at 170 deg. C

↓

Fuser Drive Motor: ON

↓

Pressure Roller Pressed

↓

Heat Roller Heater 1 ON >> OFF at 190 deg. C

↓

Pressure Roller Heater ON >> OFF at 170 deg. C
Heat Roller Heater 1 ON >> OFF at 190 deg. C
(No lighting at the same time)

↓

Pressure Roller Retracted

↓

Fuser Drive Motor OFF

Fusing Temperature Control (4)

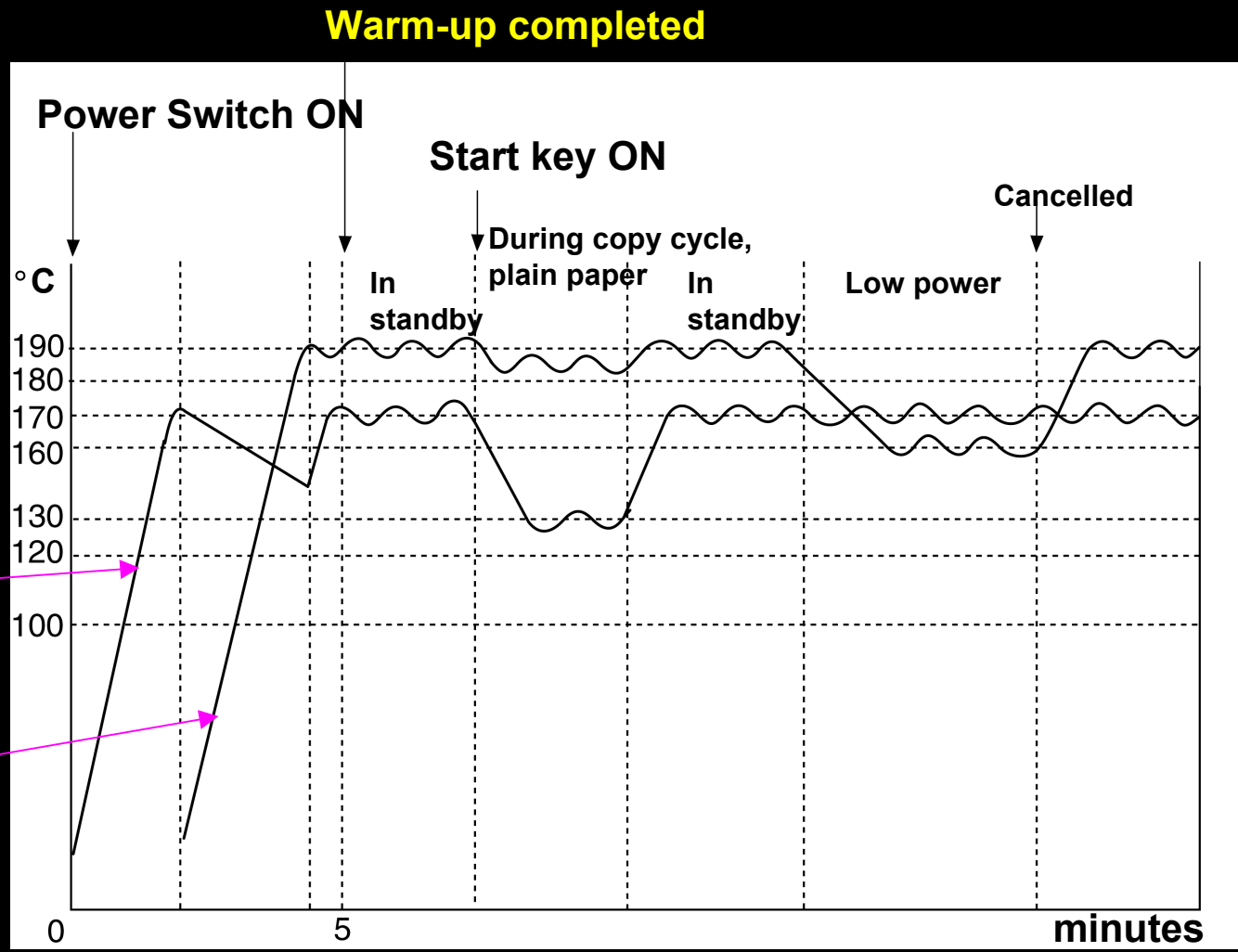

9. Paper Take-Up/Transport Section

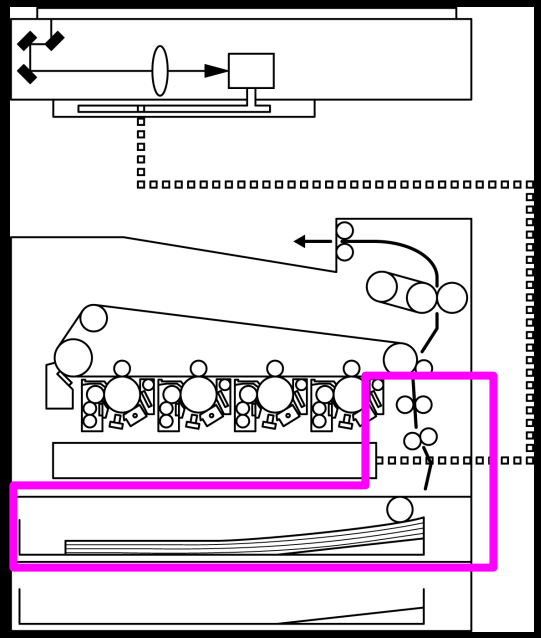

1. Improvements
2. Component Identification
3. Paper Take-Up Mechanism
4. Paper Type Setting Dial
5. Paper Supply Level Detection
6. Manual Bypass Mechanism
7. Transport/Synchronizing Rollers

9.1 Improvements from 7920

	8020/8031	7920
Type of Paper Added	Thick Paper 3 (210 - 256 g/m^2) Envelopes Labels	-
Transport Roller	Newly Added Added to ensure the paper feed performance to feed the thick paper (Type of Paper expanded) from the 1st Drawer (MPC)	-
Drive for Synchronizing Roller	Stepping Motor For better paper feed performance: Distance between Transport Roller and Synchronizing Roller is shorter, then accuracy is controlled for paper loop	Clutch

9.2 Component Identification

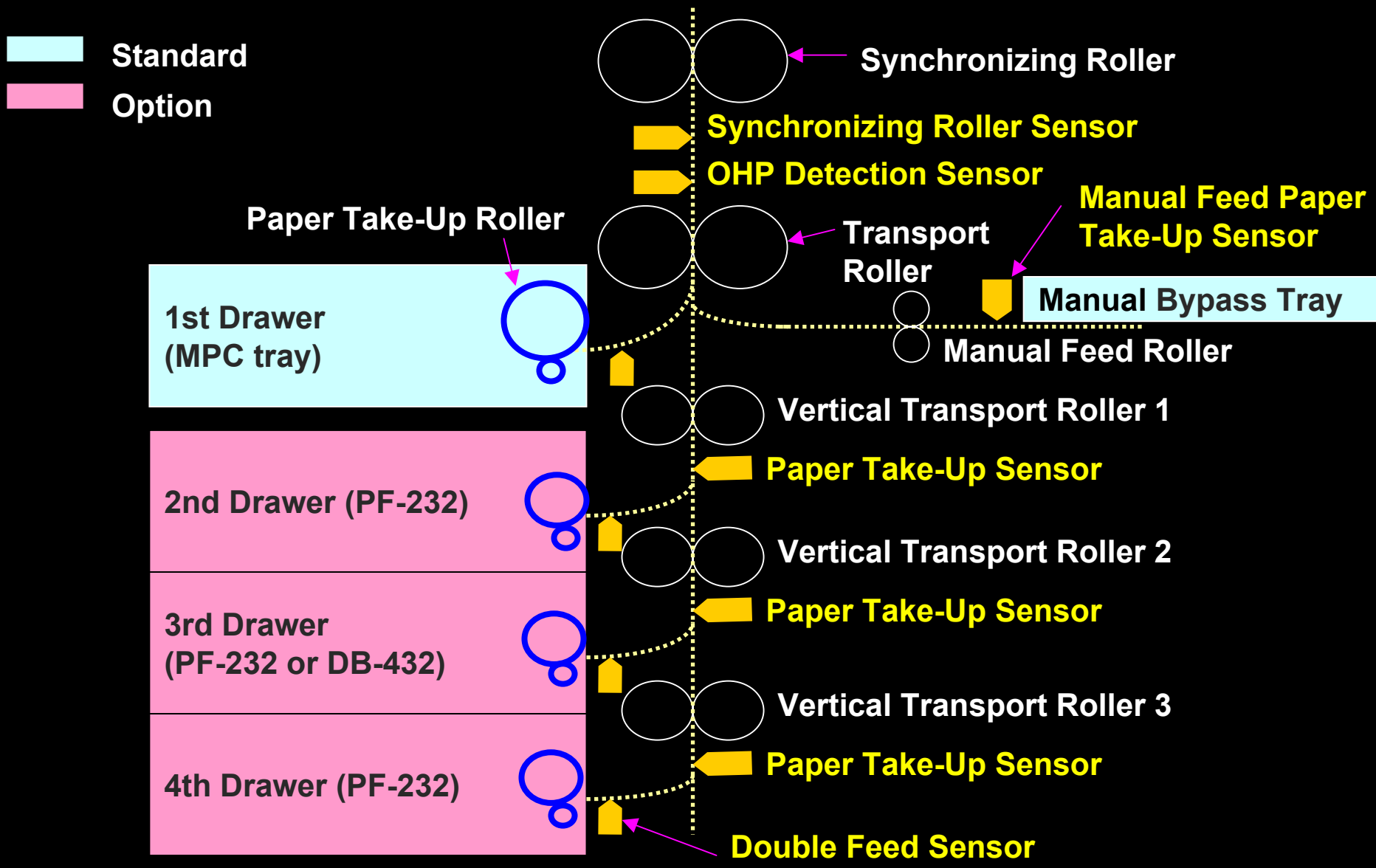

9.3 Paper Take-Up Mechanism

Main Motor

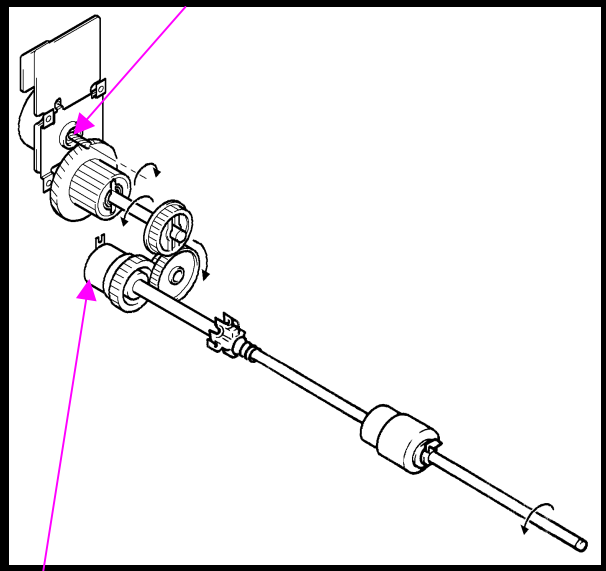

Paper Take-Up Clutch

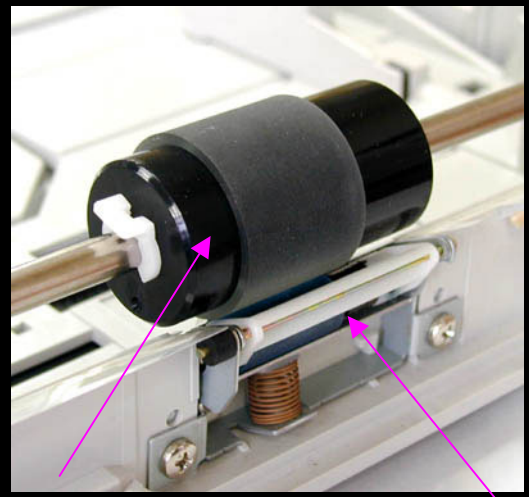

Paper Take-Up Roller

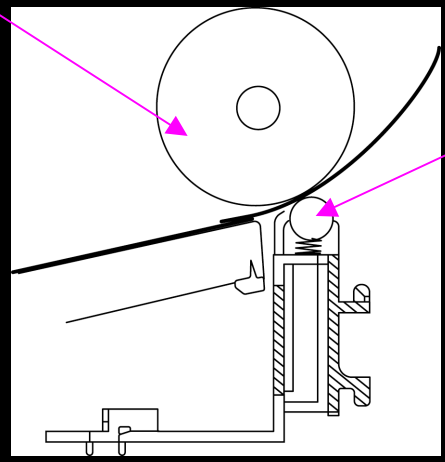

Separator Roller

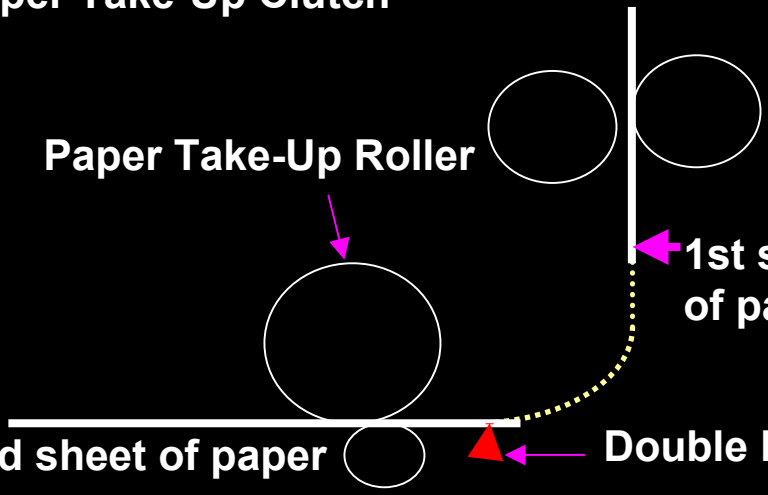

9.4 Paper Type Setting Dial

Paper Type	System Speed		Fusing Temperature	1st Image Transfer	2nd Image Transfer	Vg	Vb	γ Table
Plain Paper Plain Paper, 2-sided		Bk / Full Color / ACS: 135 mm/sec.	185 degrees C	X	O	O	X	O
Thick paper 1 (Labels)	Bk / Full Color / ACS: 60 mm/sec.		185 degrees C	X	O	O	X	O
Thick Paper 1, 2-sided								
Thick Paper 2 (Post Cards)								
Thick Paper 2, 2-sided								
Thick Paper 3								
Thick Paper 3, 2-sided								
Envelopes								
OHP Sheet			Full Color: 200 degree C					
			Bk: 190 degrees C					

9.5 Paper Supply Level Detection



Item	LED Condition
When drawer is slid out	ON
Paper Empty	ON
Near Paper Empty	Blinking
Normal supply level	OFF

At paper empty

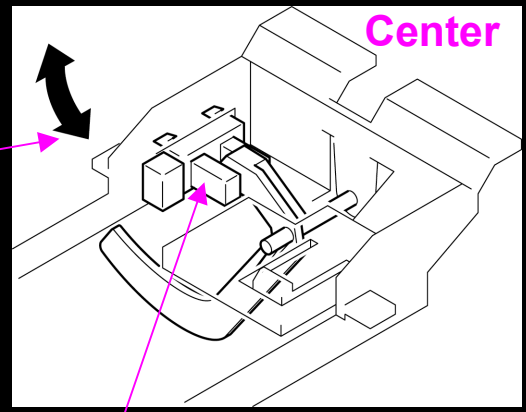

Paper Empty Sensor

Paper Near-Empty Sensor

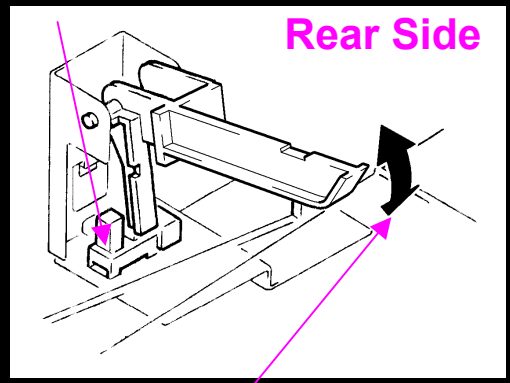

At paper near empty

20 to 80 sheets remained

9.6 Manual Bypass Mechanism

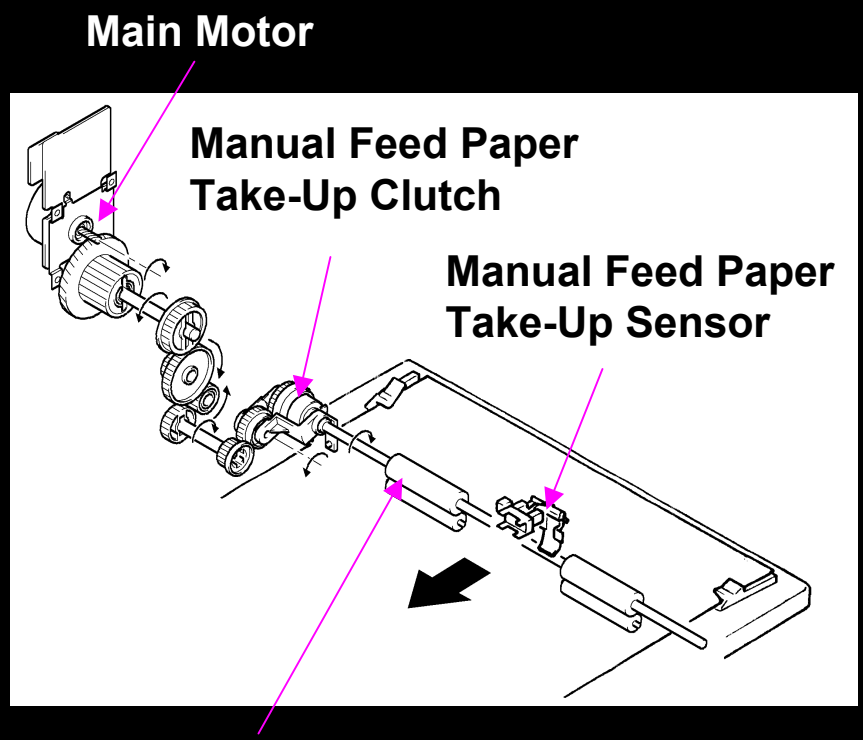

Manual Bypass Operation:

Load paper.

↓

Manual Feed Paper
Take-Up Sensor is activated.

↓

Main Motor is energized.

↓

Manual Feed Paper
Take-Up is energized.

↓

Paper is taken up.

↓

Copying Operation is started
when Start Key is turned ON

9.7 Transport/Synchronizing Rollers (1)

Synchronizing Roller Operation Timing

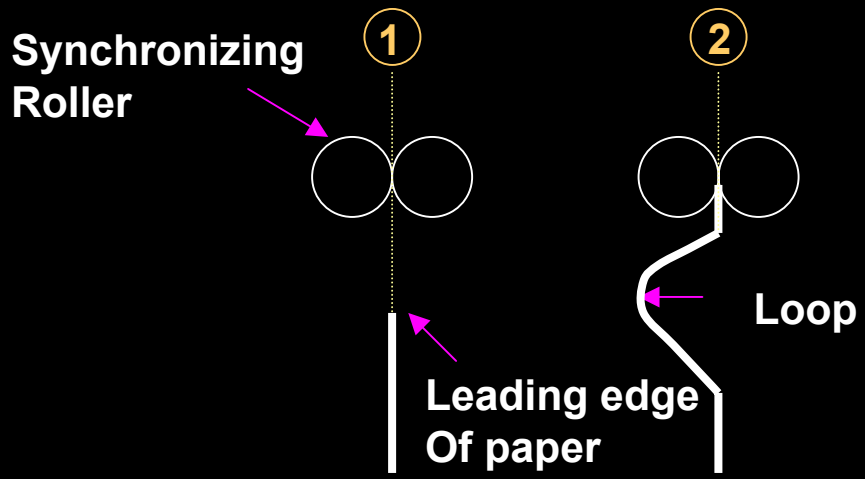

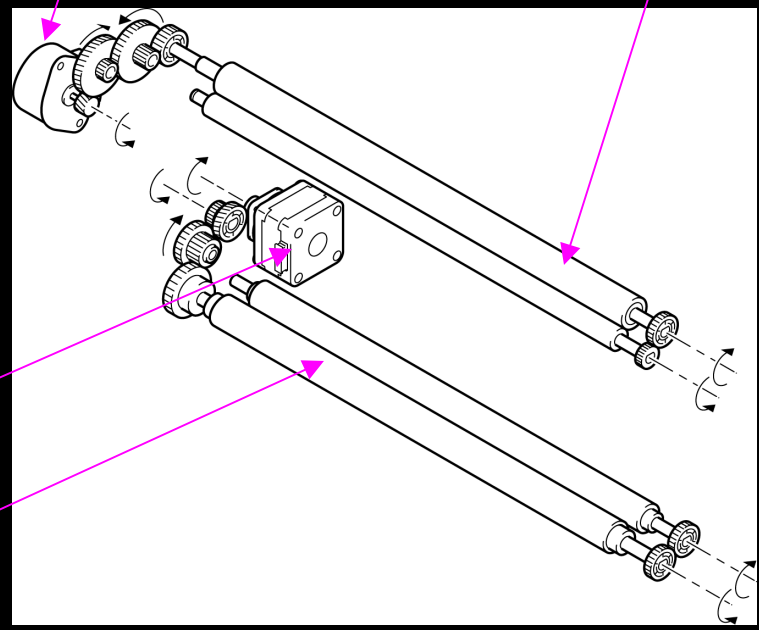

Transport/Synchronizing Rollers (2)

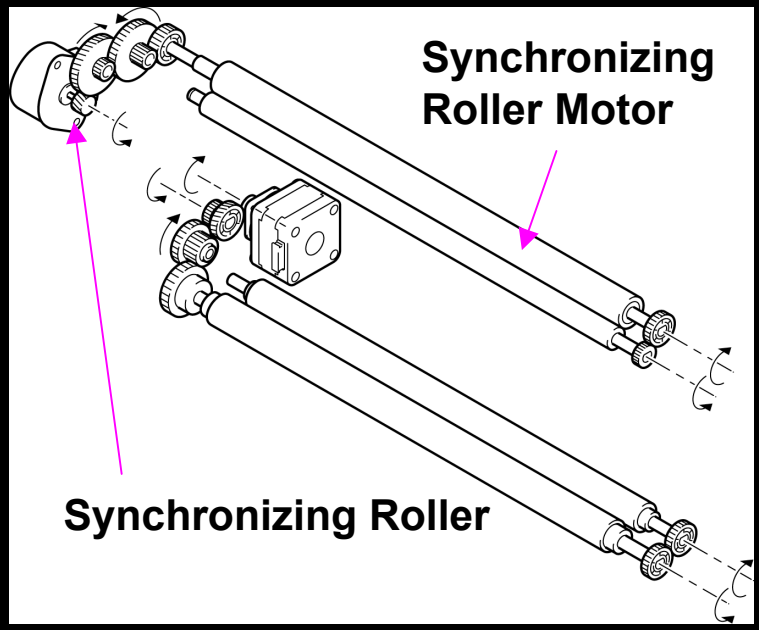

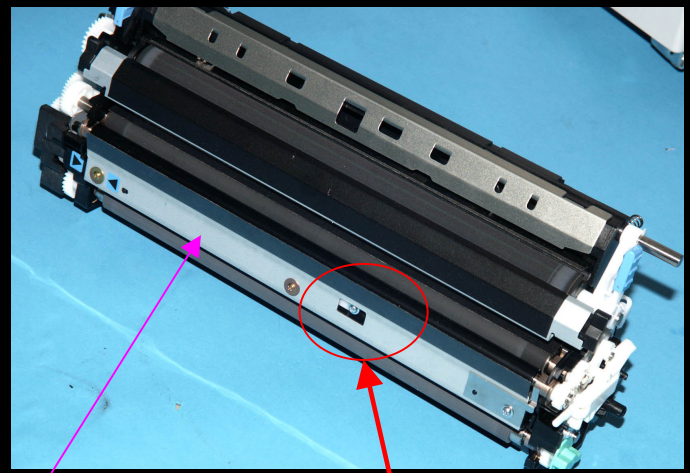

10. Image Stabilization

1. Image Stabilizer Outline

2. Image Stabilizer Timing

3. Image Stabilizer Control Flow

10.1 Image Stabilizer Outline

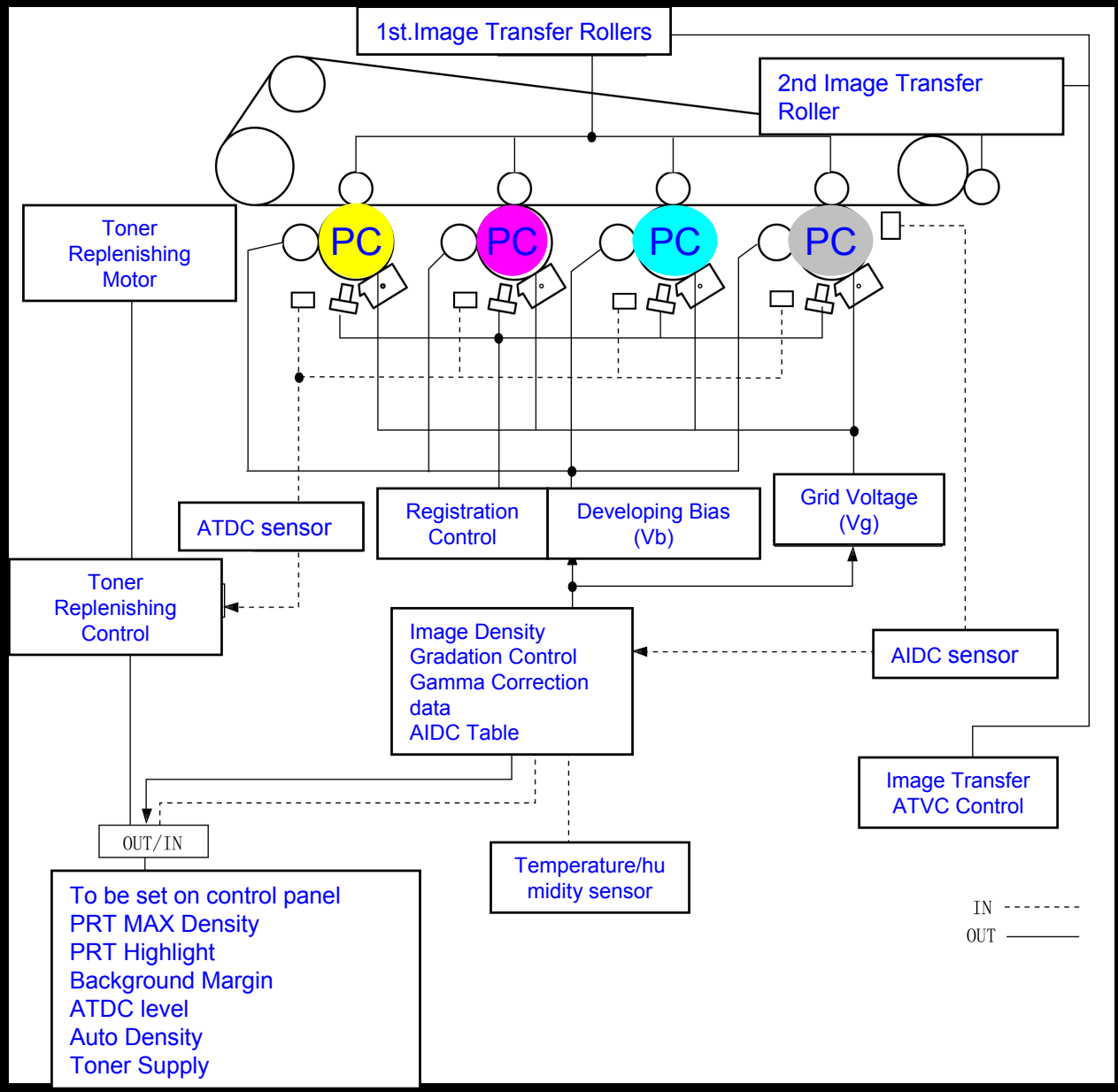

10.2 Image Stabilizer Timing

1. A new IU or Transfer Belt Unit is detected
2. “Reset + Stabilizer Mode” is run
3. Power Switch is turned ON
4. IU is reinstalled, or Left Door is opened and closed
5. “Sleep” mode is canceled
6. “Stabilizer” is run
7. At the end of a copy/print cycle
8. During γ automatic adjustment

Mode 1 — Mode 2

- Vg and Vb set again
- Color Shift correction made

Mode 3

- Vg and Vb set again
- Color Shift Correction not made

Mode 4

- Vg and Vb remaining unchanged
- Color Shift Correction not made

Mode 5

- Vg and Vb set again
- Color Shift Correction not made

10.3 Image Stabilizer Control (1)

Basic Control Function	Mode 1	Mode 2	Mode 3	Mode 4	Mode 5
Bkground Margin Cont.	○	○	○	×	○
AIDC Intensity Control	○	○	○	×	○
Max. Density Control	○	○	○	×	○
Registration Control	○	○	×	×	×
γ Correction Control	○	○	○	○	○
	Print Start	Print Start	Print Start	Print Start	Test Pattern output

Image Stabilizer Control (2)

AIDC Sensor LED Intensity Control Operations

The erased surface of the Transfer Belt is detected using the AIDC Sensor.

→ The intensity of the AIDC Sensor LED is adjusted so that the AIDC Sensor output becomes approx. 4V.

Max. Density Control Operations

Patterns are produced with Vb set at four different levels.

→ Density of each pattern is detected by the AIDC Sensor.

↓

The results are developed to each correction table.

← Vg and Vb values at max. density are calculated.

γ Correction Control Operations

Several gradation patterns are produced.

→ Density of each gradation pattern is detected by the AIDC Sensor.

↓

The results are developed to each correction table and γ correction data is calculated.