CONNECTORS LAYOUT

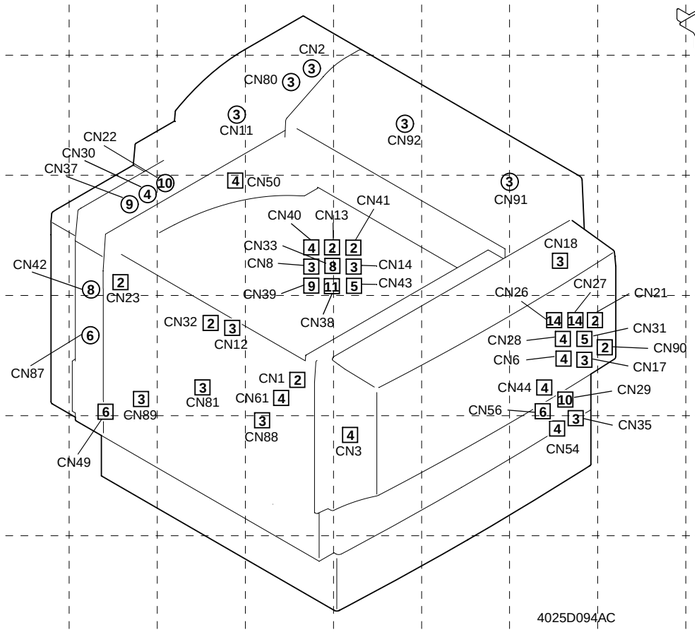

4025D094AC

LPH Unit

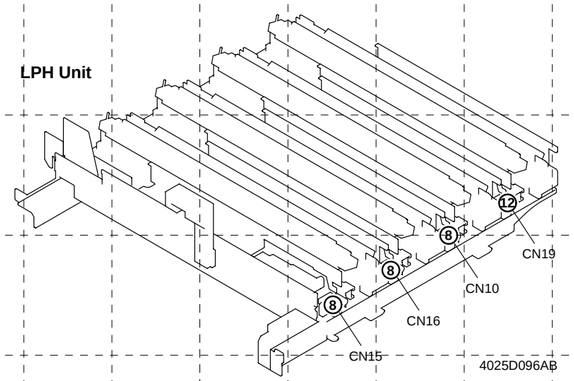

4025D096AB

2nd Transfer Unit

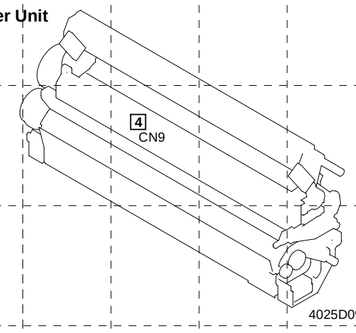

4025D095AB

Imaging Unit (Bk)

Imaging Unit (Y, M, C)

4025D139AA

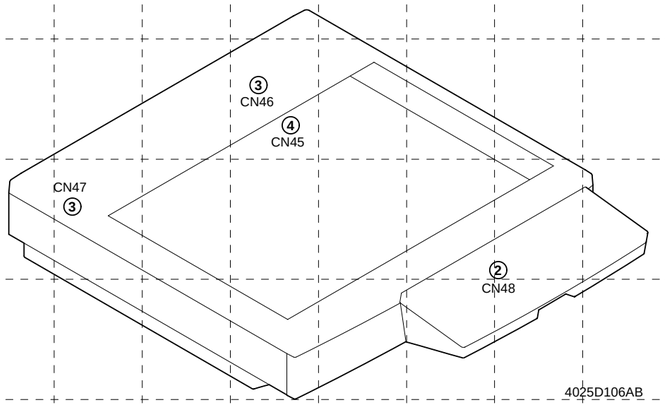

4025D106AB

Fusing Unit

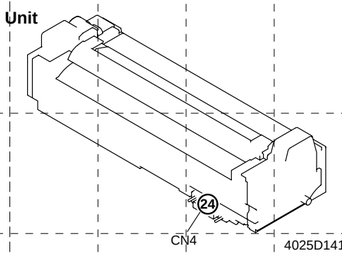

4025D141AA

Description

Number of Pin → ① Possible to confirm by removing external cover.

→ 1 Not possible to confirm by removing external cover.

CN No.		LOCATION	GRID
CN1	2P	I-5	E-4
CN2	3P	F-2	C-4
CN3	4P	A-10	F-5
CN4	24P	C~D-3	K-13
CN6	4P	A-11	E-7
CN8	3P	H-2~3	D-4
CN9	4P	H-2	E-12
CN10	8P	C~D-23	B~C-13
CN11	3P	B-35	C-3
CN12	3P	I-28	E-3
CN13	2P	A-9	D-4~5
CN14	3P	H-2~3	D-5
CN15	8P	A-23	C-12
CN16	8P	B-23	C-13
CN17	3P	F-9	E-7
CN18	3P	A-35	D-7
CN19	12P	B~C-13	B-14
CN21	2P	E-35	E-7~8
CN22	10P	E~F-35	D-3
CN23	2P	E~F-6	D-2
CN26	14P	A~B-13	E-7
CN27	14P	C~D-13	E-7
CN28	4P	A-11	E-7
CN29	10P	C-6	E-7
CN30	4P	G-34	D-2
CN31	5P	D-35	E-7
CN32	2P	C-35	E-3
CN33	8P	A~B-2~3	D-4~5
CN35	3P	D~E-6	E~F-7
CN37	9P	D~E-34	D-2
CN38	11P	G-8	D-4~5
CN39	9P	H~I-3	D-4
CN40	4P	H-2~3	D-4
CN41	2P	A-2	D-5
CN42	8P	F-34	D-2
CN43	5P	D-6	D-5
CN44	4P	D-13	E-7
CN45	4P	A-26	I-4
CN46	3P	G~H-20	I-4
CN47	3P	G-20	J-2
CN48	2P	G-26	J-6~7
CN49	6P	D-19	E~F-2
CN50	4P	D-6	C~D-3
CN54	4P	C-9	F-7
CN56	6P	A~B-9	E~F-7
CN61	4P	F~G-6~7	E-4
CN80	3P	B-35	C-4
CN81	3P	G-7~8	E-3
CN87	6P	B-35	E-2
CN88	3P	B-35	E~F-4
CN89	3P	B~C-35	E-2
CN90	2P	E-8	E-8
CN91	3P	F-2	C~D-6~7

CN No.		LOCATION	GRID
CN92	3P	F~G-2	C-5

4025-B401-1A