GENERAL

Blank page

1. SPECIFICATION

Type	:	Freestanding scanner and printer separated from each other
Original Scanning	:	Scanning in main scanning direction with a reduction-type color CCD (One Scan Reading System)
PC Drum Type	:	OPC (organic photoconductor)
Copying System	:	Electrostatic dry-powdered image transfer to plain paper
Scanning Density	:	Equivalent to 600 dpi
Print Density	:	Equivalent to 600 dpi in main scanning direction x 1800 dpi in sub-scanning direction
Paper Feeding System (Standard)	:	Three-Way system Manual Bypass Table...Single 1st Drawer.....250 sheets 2nd Drawer.....500 sheets
Printing Process	:	Tandem-type indirect electrostatic recording system
Exposure System	:	LED Unit exposure for each of Y, M, C, and Bk
Developing System	:	2-component magnetic brush developing
Charging System	:	DC comb electrobe Scorotron System
Ozone Removal System	:	Ozone Filter
Image Transfer System	:	Intermediate Transfer Belt System
Paper Separating System	:	Selecting either nonwoven fabric bias or ground + Separation Finger
Transfer Belt Cleaning System	:	Blade Cleaning + Brush + Toner Patch
Fusing System	:	Belt Fusing
Paper Charge Neutralizing	:	Charge Neutralizing Brush
Max. Original Size	:	A3 or 11×17

Copy Paper Type

Paper Source		1st Drawer	2nd Drawer	Manual Bypass Table
Copy paper type	Plain paper (64 to 90 g/m²)	❍	❍	❍
	Translucent paper	–	–	–
	OHP transparencies (dedicated)	❍	–	❍
	Thick paper (91 to 150 g/m²)	❍ 20 sheets or less	–	❍
	Thick paper (151 to 209 g/m²)		–	❍
	Thick paper (210 to 256 g/m²)		–	❍
	Postcards		–	❍
	Envelope		–	❍
	Label Sheet		–	❍
Copy paper dimensions	Max. (width × length)	311 × 457 mm 12-1/4 × 18	297 × 432 mm 11-3/4 × 17	311 × 457 mm 12-1/4 × 18
	Min. (width × length)	86 × 140 mm 3-1/2 × 5-1/2	182 × 182 mm 7-1/4 × 7-1/4	86 × 140 mm 3-1/2 × 5-1/2

❍ : Reliably fed –: Feeding prohibited

Multiple Copies : 1 to 999 copies
Warming-up Time : 5 min. or less (at ambient temperature of 20 °C, 68 ° F and rated source voltage)

First Copy Time

	8031	8020
Full Color	9.9 sec.	14.1 sec.
Mono Color	7.9 sec.	7.9 sec.

(1st Drawer, full size, A4C, Manual Exposure)

Copying Speed for Multi-Copy Cycle (copies/min.)

Size	8031	8020	Size	8031	8020
A3, 11 × 17	15/15	10/15	B4L	18/18	12/18
A4L, 8-1/2 × 11L	21/21	14/21	B5L	21/21	14/21
A4C, 8-1/2 × 11C	31/31	20/31	B5C	31/31	20/31

(Full Color / Mono Color fed from 2nd Drawer)

Zoom Ratio

		Metric Area	Inch Area
Fixed	Full size	× 1.000	× 1.000
	Reduction	× 0.816 × 0.707 × 0.500	× 0.785 × 0.733 × 0.647 × 0.500
	Enlargement	× 1.154 × 1.414 × 2.000	× 1.214 × 1.294 × 1.545 × 2.000
Variable (in 0.001 increments)		× 0.250 to × 4.000	

Lens : Through Lens
Light Source : White Fluorescent Lamp

Max. Power Consumption (copier only) : 1.5 kw
Power Requirements : 110 v, 120 v, 127 v, 220 to 240 v; 50/60 Hz

Environmental Conditions

Temperature	10 to 30 °C, 50 to 86 ° F (with a fluctuation of 10 °C, 50 ° F or less per hour)
Humidity	25 to 85 % (with a fluctuation of 20 % or less)
Ambient Illumination	3,000 lux or less
Levelness	1° (1.75/100 or less)

Dimensions	:	With Rack Width.....596 mm, 23-1/2 Depth.....792 mm, 31-1/4 Height.....1025 mm, 40-1/4 Engine + 2nd Drawer Width.....596 mm, 23-1/2 Depth.....730 mm, 28-3/4 Height.....571 mm, 22-1/2 Scanner Width.....589 mm, 23-1/4 Depth.....730 mm, 28-3/4 Height.....152 mm, 6
Weight	:	Engine+ 2nd Drawer.....85 kg, 187-1/2 lbs Scanner.....19.5 kg, 43 lbs Rack.....18 kg, 39-3/4 lbs

2. PRECAUTIONS FOR INSTALLATION

2-1. Installation Site

To ensure safety and utmost performance of the copier, the copier should NOT be used in a place:

- Where it will be subjected to extremely high or low temperature or humidity.
- Where it will be subjected to sudden fluctuations in either temperature or humidity.
- Which is exposed to direct sunlight.
- Which is in the direct air stream of an air conditioner, heater, or ventilator.
- Which has poor ventilation or is dusty.
- Which does not have a stable, level floor or where it will receive undue vibration.
- Which is near any kind of heating device.
- Which is near volatile flammables (thinner, gasoline, etc.).
- Where it may be splashed with water.
- Which puts the operator in the direct stream of exhaust from the copier.
- Where ammonia gas might be generated.

2-2. Power Source

- If any other electrical equipment is sourced from the same power outlet, make sure that the capacity of the outlet is not exceeded.
- Use a power source with little voltage fluctuation.
- Never connect by means of a multiple socket any other appliances or machines to the outlet being used for the copier.
- Ensure that the copier does not ride on the power cord or communication cable of other electrical equipment, and that it does not become wedged into or underneath the mechanism.
- Make the following checks at frequent intervals:

✻ Is the power plug abnormally hot?
✻ Are there any cracks or scrapes in the cord?
✻ Has the power plug been inserted fully into the outlet?
✻ Does something, including the copier itself, ride on the power cord?

Use an outlet with a capacity of 110/120/127 V, 15 A or more. 220/240 V, 10 A or more.

2-3. Grounding

- Always ground the copier to prevent receiving electrical shocks in the case of electrical leakage.
- Connect the ground wire to the ground terminal of the outlet or a grounding contact which complies with the local electrical standards.
- Never connect the ground wire to a gas pipe, the ground wire for a telephone, lightning arrester, or a water pipe for fear of fire and electrical shock.

3. PRECAUTIONS FOR USE

3-1. To ensure that the copier is used in an optimum condition

- Never place a heavy object on the copier or subject the copier to shocks.
- Insert the power plug all the way into the outlet.
- Do not attempt to remove any panel or cover which is secured while the copier is making copies.
- Do not turn OFF the copier while it is making copies.
- Provide good ventilation when making a large number of copies continuously.
- Never use flammable sprays near the copier.
- If the copier becomes inordinately hot or produces abnormal noise, turn it OFF and unplug it.
- Do not turn ON the power switch at the same time when you plug the power cord into the outlet.
- When unplugging the power cord, do not pull on the cord; hold the plug and pull it out.
- Do not bring any magnetized object near the copier.
- Do not place a vase or vessel containing water on the copier.
- Be sure to turn OFF the power switch at the end of the workday or upon power failure.
- Use care not to drop paper clips, staples, or other small pieces of metal into the copier.

3-2. Operating Environment

The operating environmental requirements of the copier are as follows.

- Temperature: 10 to 30 °C, 50 to 86 ° F
- Humidity: 25 to 85 % RH
- Rate of temperature change: 10 °C/h, 50 ° F/h
- Rate of humidity change: 20 % RH/h

3-3. Power Requirements

The power source voltage requirements are as follows.

- Voltage fluctuation: AC110, 120, 220, 240 V
  ±10 % (copying performance assured)
  (127 V areas only; between -10 % and +6 %)
  +10 %
  -15 % (paper feeding performance assured)
- Frequency fluctuation: 50/60 Hz ±0.3 %

3-4. Note

- It is prohibited to copy paper and hard currencies, government securities, and municipal bonds (even when they are stamped as “Sample”).
- For fear of infringement of copyright, it is also prohibited to copy copyrighted works, including books, music, works of art, maps, drawings, motion pictures, and photos except when the copy is to be used only personally.

4. HANDLING OF CONSUMABLES

Before using any consumables, always read the label on its container carefully.

- Paper can be easily damaged by dampness. To prevent absorption of moisture, store paper, which has been removed from its wrapper but not loaded in the drawer, in a sealed plastic bag in a cool, dark place.
- Keep consumables out of the reach of children.
- Do not touch the PC Drum with bare hands.
- The same sized paper is of two kinds, short grain and long grain. Short grain paper should only be fed through the copier crosswise, long grain paper should only be fed lengthwise.
- If your hands become soiled with toner, wash them with soap and water.
- Do not throw away any used consumables (PC Drum, starter, toner, etc.). They are to be collected.
- Do not burn, bury in the ground, or throw into the water any consumables (PC Drum, starter, toner, etc.).
- Do not store consumables in a place which:

✻ Is hot and humid.
✻ Is subject to direct sunlight.
✻ Has an open flame nearby.

5. OTHER PRECAUTIONS

CAUTION

Double pole / neutral fusing

ATTENTION

Double pôle / fusible sur le neutre.

6. LED RADIATION SAFETY

- This product is a copier which operates by means of a LED (light emitting diodes) exposure system. There is no possibility of danger from the LED optical radiation, because the LED optical radiation level does not exceed the accessible radiation limit of class 1 under all conditions of operation, maintenance, service and failure.

7. SYSTEM OPTIONS

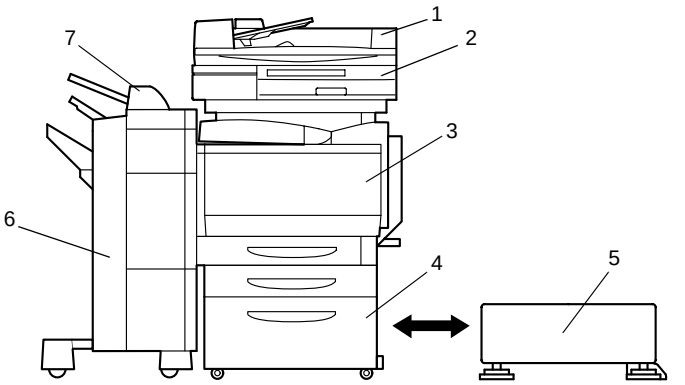

C4025o263AA

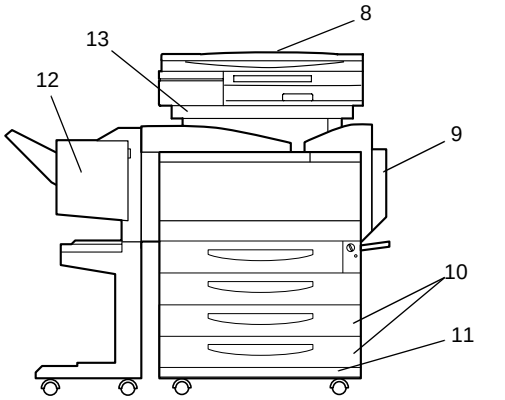

C4025o264AA

1. Duplexing Document Feeder DF-332
2. Scanner SN-232
3. Copier printer section
4. Large Capacity Cabinet DB-432
5. Copy Desk DK-133
6. Finisher FS-135
7. Option Tray FT-331
8. Original Cover CV-131
9. Duplex Unit AD-231
10. Paper Feed Unit PF-232
11. Copy Table DK-134
12. Finisher FS-231
13. Copier Stand DK-232
14. Memory MU-433*
15. Hard Disk Drive HD-131*
16. Punch Kit PK-131*
17. Mechanical Counter*
18. Printer Controller IP-711*
19. Printer Controller Fiery X3e 31C-M*
20. I/F Kit VI-635* (Used only when Fiery X3e 31C-M is installed)

*:The internal options are not shown.