OVERALL WIRING DIAGRAM(1/4)

MANUAL BYPASS SECTION

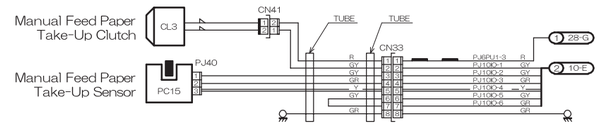

FUSING SECTION

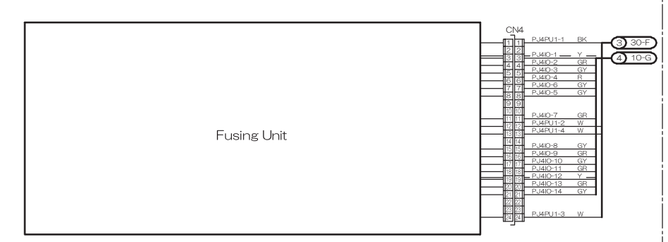

TRANSPORT SECTION

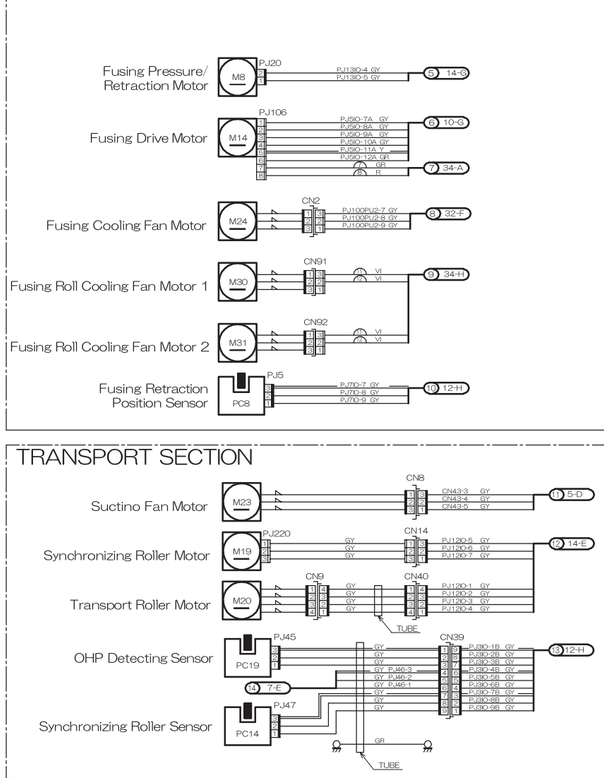

IMAGE TRANSFER SECTION

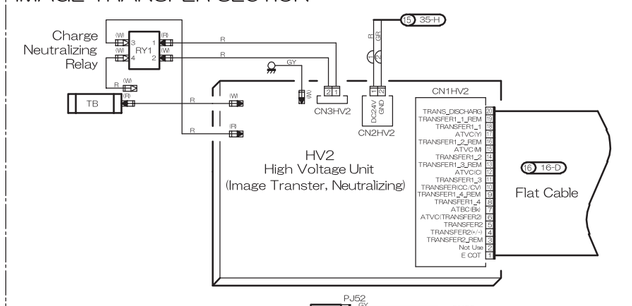

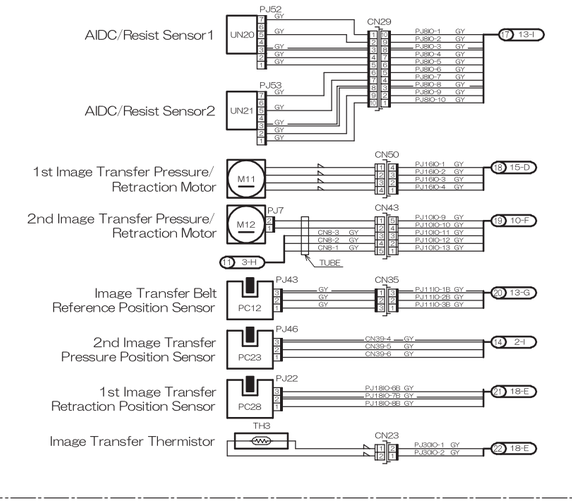

1st DRAWER SECTION

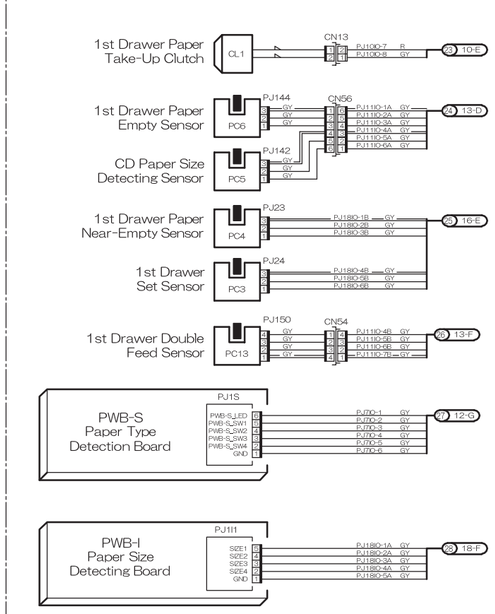

PAPER EXIT SECTION

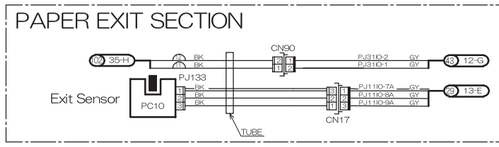

2nd DRAWER SECTION

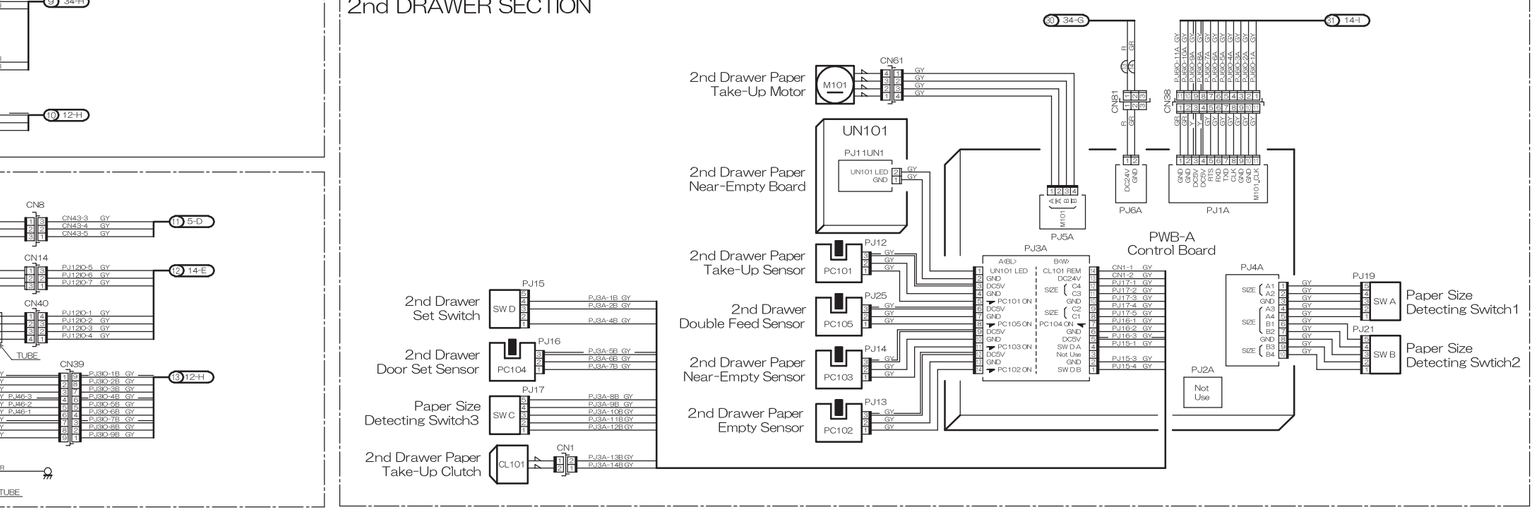

A-1