FrameMaker Ver.5.5(PC) FS-135 OPTION FOR 8020/8031
02.08.23

FS-135

SERVICE MANUAL



Blank page

CONTENTS

GENERAL
1. SPECIFICATIONS G-1
2. DRIVE SYSTEM G-3
3. ELECTRICAL COMPONENTS LAYOUT G-4

SWITCHES ON PWB, TEST MODE
1. SWITCHES ON PWB S-1
2. TEST MODE S-2
2-1. Test Mode Setting Procedure S-2
2-2. Test Mode Operations S-2
2-3. Operation in Each Test Mode Operation S-3
(1) 1st Tray Exit S-3
(2) Elevator Tray Exit S-3
(3) Finisher Tray Exit S-3
(4) 3rd Tray Exit S-4
(5) Shifting Operation S-4
(6) Aligning Plate Operation S-4
(7) Stapling Unit CD Movement S-5
(8) Exit Roller/Rolls Spacing S-5
(9) Storage Roller/Rolls Spacing S-5
(10) Elevator Tray Operation S-6
(11) Sensor Test S-6

DIS/REASSEMBLY, ADJUSTMENT
1. DISASSEMBLY AND REASSEMBLY D-1
1-1. Maintenance Schedule D-1
1-2. Removal of the Exterior Parts D-1
1-3. Removal of the Stapling Unit D-2
2. ADJUSTMENTS D-3
2-1. Adjustment of the Solenoids D-3
(1) Adjustment of the Upper/Lower Entrance Switching Solenoid (SL1) D-3
(2) Adjustment of the 1st Tray Entrance Selecting Solenoid (SL2) D-3
2-2. Timing Belt Tension Adjustment D-4
(1) Adjustment of the Upper Entrance Motor (M4) Timing Belt D-4
(2) Adjustment of the Lower Entrance Motor (M2) Timing Belt D-4
(3) Adjustment of the Exit Motor (M3) Timing Belt D-4
2-3. Adjustment of the Elevator Tray Upper Limit Sensor D-5

TROUBLESHOOTING
1. SENSOR CHECK T-1
1-1. Sensor Check Screen T-1
1-2. Sensor Check List T-2
1-3. Sensor Check Procedure T-4
2. MISFEED DETECTION AND TROUBLESHOOTING PROCEDURES T-5
2-1. Misfeed Detecting Sensor Layout T-5

2-2. Misfeed Detection T-6
2-3. Misfeed Troubleshooting Procedures T-7
(1) Transport misfeed T-7
(2) Misfeed at the 1st Tray exit T-7
(3) Misfeed at the 3rd Tray exit (FT-331) T-8
(4) Misfeed at the Elevator Tray exit T-8
(5) Paper stack exit misfeed T-8
(6) Staple misfeed T-9
3. MALFUNCTION DETECTION AND TROUBLESHOOTING PROCEDURES . T-10
3-1. Malfunction Detection T-10
3-2. Malfunction Troubleshooting Procedures T-11
(1) C0B20 ..... T-11
(2) C0B30 ..... T-11
(3) C0B48 ..... T-11
(4) C0B4A T-11
(5) C0B50 ..... T-12
(6) C0B80 ..... T-12
(7) C0BA0 ..... T-12

GENERAL



Blank page

1. SPECIFICATIONS

Type	:	Single Staple Finisher	
Installation	:	Freestanding	
Modes	:	Non-Sort	Copier
		Non-Sort, Sort, Group	
		Sort Staple, Group Staple	PC Print

Copy Medium

Mode	Paper Type	Paper Size	Paper Weight	Capacity	Output Tray	Max. No. of Sheets to be Stapled
Non-Sort	Plain paper	A3W to A6L 12-1/4 × 18" to 5-1/2 × 8-1/2"	60 to 256 g/m^2 16 to 68-1/4 lb	250 sheets	1st Tray	———
	Thick paper			20 sheets		
	Transparencies					
	Translucent paper					
	Envelopes					
Sort, Group	Plain paper	A3W to A4L/ A4C 12-1/4 ×18" to 8-1/2 × 11"	60 to 209 g/m^2 16 to 55-1/2 lb	1,000 sheets (A4L. 8-1/2 or smaller); 500 sheets (B4L . 8-1/2 or larger)	Elevator Tray	———
	Thick paper					
Sort Staple, Group Staple	Plain paper	A3 to A4L/ A4C 11 × 17" to 8-1/2 × 11"	60to 90 g/m^2 16 to 24 lb			30 sheets✻ (60 to 80 g/m^2, 16 to 21 lb)

✻ : 20 sheets if originals of high ID (Color Wise 3) is used.
: 15 sheets when using Color Copy 90 paper.
✻ : 20 sheets when using Radiant White paper.

Registration	:	Center
No. of Holes	:	2, 3 or 4 holes
Power Requirements	:	DC 24 V (supplied from copier) DC 5 V (generated by Finisher)
Power Consumption	:	63 W
Dimensions	:	Width: 538 mm, 21-1/4" Depth: 637mm, 25-1/16" Height: 978 mm, 38-1/2"
Mass	:	35.5 kg, 78-1/4 lb
Environmental Requirements	:	Same as copier
Supplies	:	Staple Cartridge

<FT-331>

Name	:	3rd Tray
Installation	:	Fixed to Finisher
Modes	:	Non-Sort (in the fax or printer output mode)

Copy Medium

Paper Type	Paper Size	Paper Weight	Capacity
Plain paper	A3L to AaC/A4L 11 × 17" to 5-1/2 × 8-1/2"	60 to 90 g/m^2 16 lb to 24 lb	100 sheets: A4C, 8-1/2 × 11" (80 g/m^2, 20 lb) 50 sheets: except A4C, 8-1/2 × 11" (80 g/m^2, 20 lb) (Height: up to 28 mm, 1 lb)
Recycled paper			

Registration	:	Center
Power Requirements	:	DC 5 V, DC 24 V (supplied from Finisher)
Dimensions	:	Width: 341 mm, 13-1/2 Depth: 527 mm, 20-3/4 Height: 149 mm, 5-3/4
Mass	:	1.75 kg, 3-3/4 lb
Environmental Requirements	:	Same as copier

2. DRIVE SYSTEM

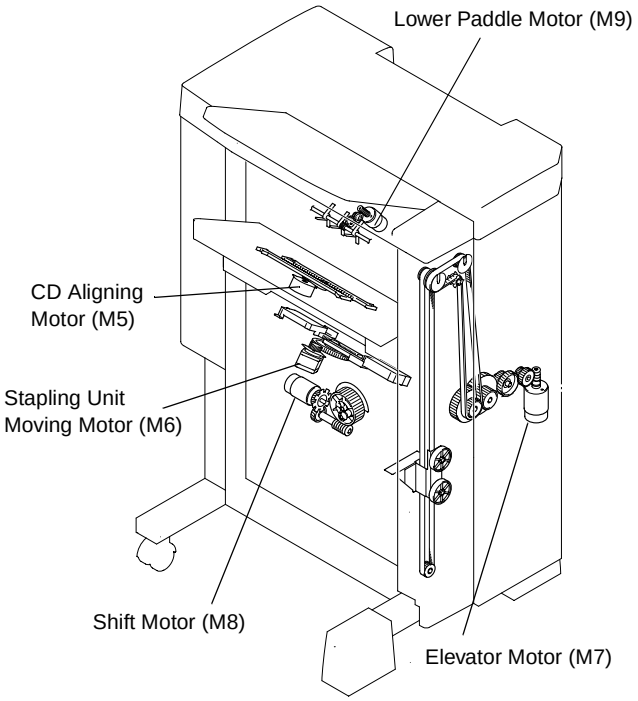

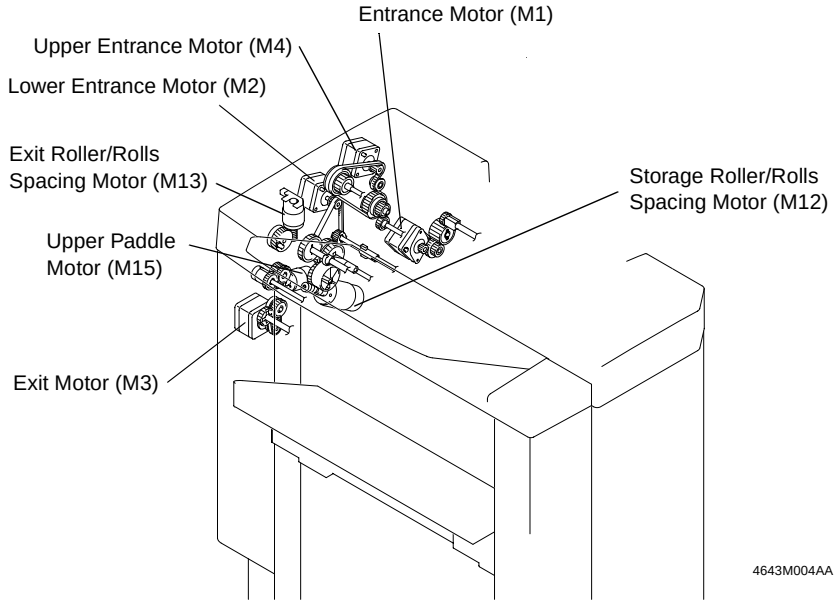

3. ELECTRICAL COMPONENTS LAYOUT

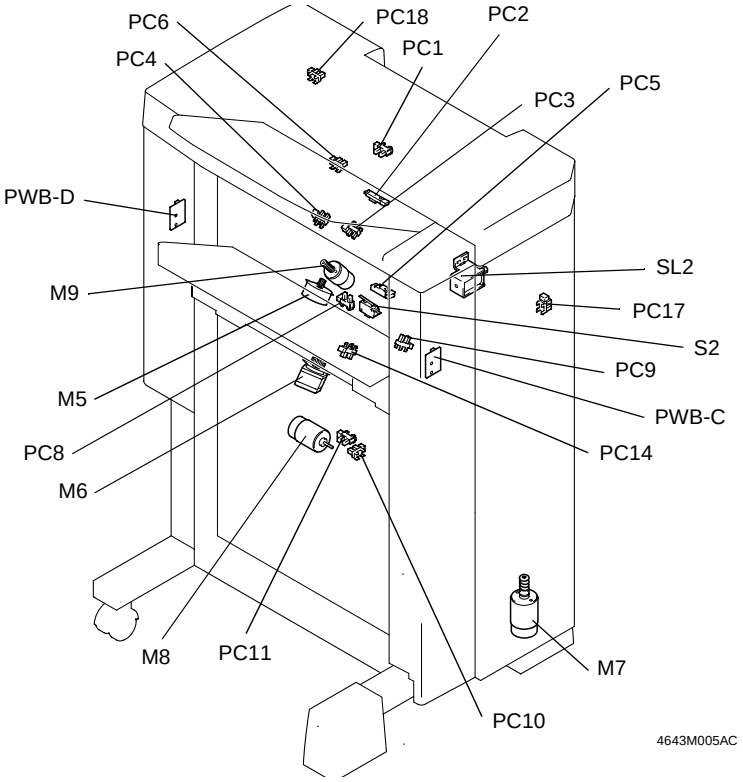

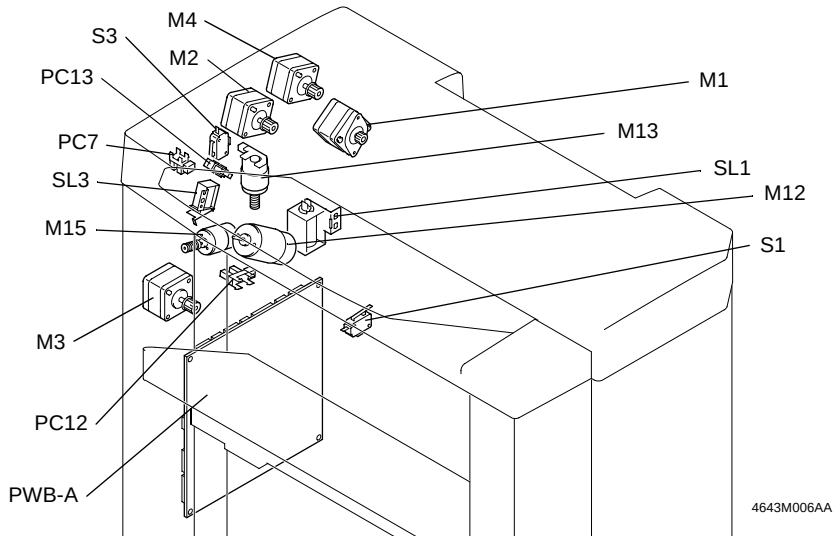

Symbol	Name	Symbol	Name
PWB-A	Control Board	PC1	1st Tray Exit Sensor
PWB-C	Elevator Tray Upper Limit Sensor LED	PC2	Lower Entrance Sensor
		PC3	Storage Sensor
PWB-D	Elevator Tray Upper Limit Sensor PQ	PC4	Upper Entrance Sensor
		PC5	Finisher Tray Paper Detecting Sensor
M1	Entrance Motor		
M2	Lower Entrance Motor	PC6	1st Tray Full Detecting Sensor
M3	Exit Motor	PC7	Elevator Tray Full Detecting Sensor
M4	Upper Entrance Motor		
M5	CD Aligning Motor	PC8	Elevator Tray Paper Detecting Sensor
M6	Stapling Unit Moving Motor		
M7	Elevator Motor	PC9	CD Aligning Home Position Sensor
M8	Shift Motor		
M9	Lower Paddle Motor	PC10	Shift Home Position Sensor
M12	Storage Roller/Rolls Spacing Motor	PC11	Shift Motor Pulse Sensor
		PC12	Storage Roller Home Position Sensor
M13	Exit Roller/Rolls Spacing Motor		
M15	Upper Paddle Motor	PC13	Exit Roller Home Position Sensor
SL1	Upper/Lower Entrance Switching Solenoid	PC14	Staple Home Position Sensor
		PC17	Front Door Detecting Sensor
SL2	1st Tray Entrance Selecting Solenoid	PC18	Upper Cover Detecting Sensor
		PC19	3rd Tray Exit Sensor
SL3	Upper Paddle Solenoid	PC20	3rd Tray Full Detecting Sensor
SL4	3rd Tray Entrance Selecting Solenoid	PC21	3rd Tray Open/Close Sensor
		S1	Set Switch
		S2	Elevator Tray Upper Limit Switch

Blank page

SWITCHES ON PWB, TEST MODE



Blank page

1. SWITCHES ON PWB

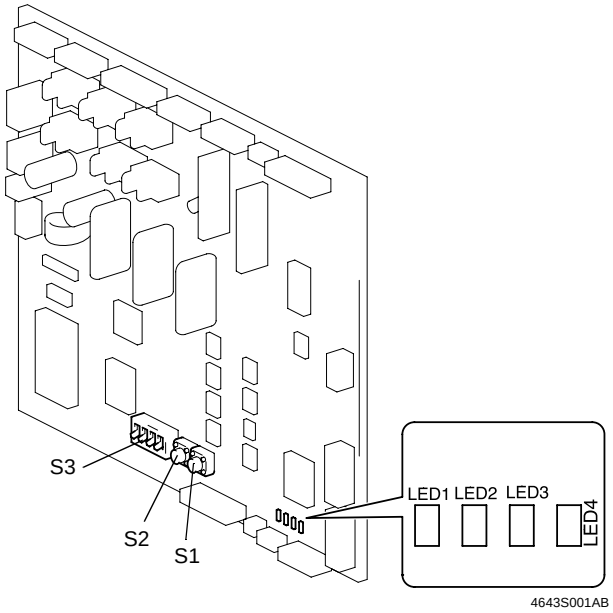

4643S001AB

S1	Used to run the Test Mode operation.
S2	
S3	DIP switch used to set the Test Mode operation.
LED1~4	Turn ON or OFF, or blink to indicate a specific condition during Test Mode operations.

2. TEST MODE

2-1. Test Mode Setting Procedure

<Setting Procedure>
1. Turn OFF the Power Switch of the copier.
2. Flip keys of the DIP switch into the ON or OFF position as necessary. (See Table below.)
3. Turn ON the Power Switch of the copier.
4. This sets the Finisher into the corresponding Test Mode operation.

<Resetting Procedure>
- Flip all keys of the DIP switch to their respective initial positions and turn OFF, then ON, the Power Switch of the copier.

2-2. Test Mode Operations

Test Mode Operation	DIP Switch (S3)				LED			
	1	2	3	4	1	2	3	4
Online					❍	❍	❍	●
1st Tray exit	ON				●	❍	❍	❍
Elevator Tray exit		ON			❍	●	❍	❍
3rd Tray exit			ON		❍	❍	●	❍
Finisher Tray exit	ON	ON			●	●	❍	❍
Shifting operation	ON		ON		●	❍	●	❍
Aligning Plate operation		ON	ON		❍	●	●	❍
Stapling Unit CD movement	ON	ON	ON		●	●	●	❍
Exit Roller/Rolls spacing				ON	❍	❍	❍	●
Storage Roller/Rolls spacing	ON			ON	●	❍	❍	●
Elevator Tray operation		ON		ON	❍	●	❍	●
Sensor test	ON		ON	ON	Indicates sensor state			

●: Blinking ❍: OFF

✻ Whenever the Control Board (PWB-A) is to be replaced, take note of the initial positions of all keys of the DIP switch. After the replacement procedure has been completed, be sure to flip all keys of the DIP switch on the new Control Board (PWB-A) to their respective initial positions.

2-3. Operation in Each Test Mode Operation

(1) 1st Tray Exit

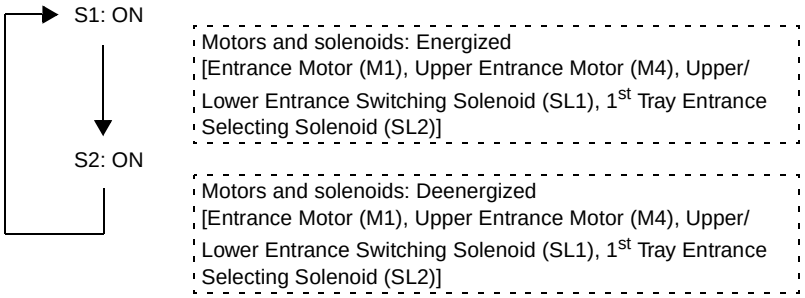

(2) Elevator Tray Exit

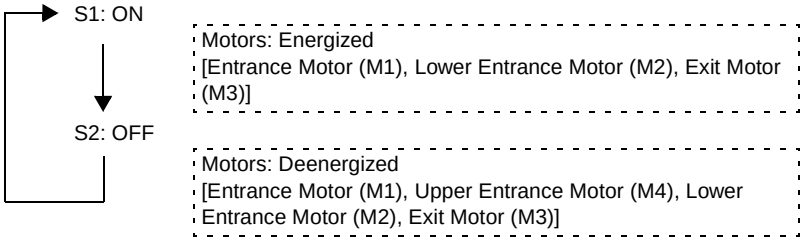

(3) Finisher Tray Exit

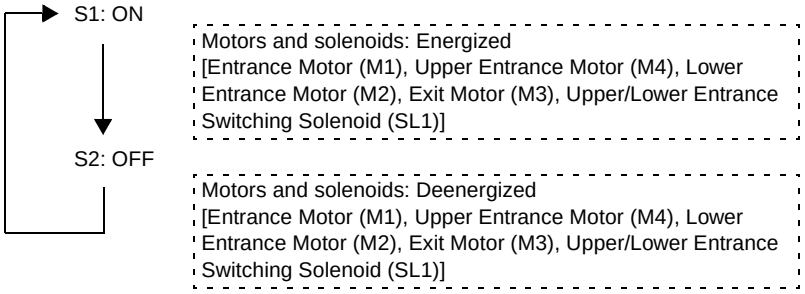

(4) 3rd Tray Exit

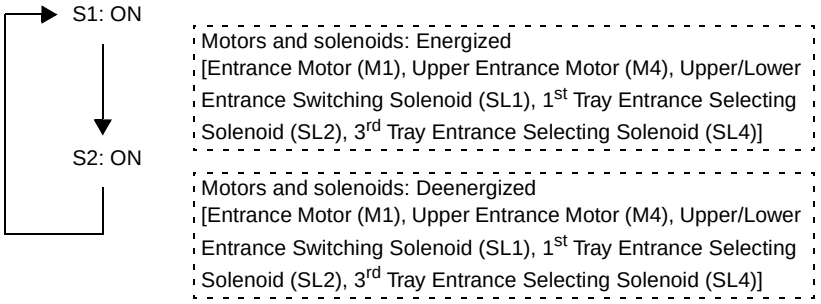

(5) Shifting Operation

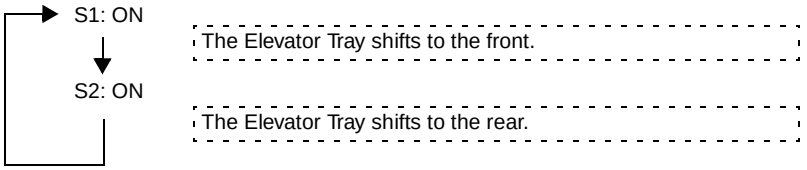

(6) Aligning Plate Operation

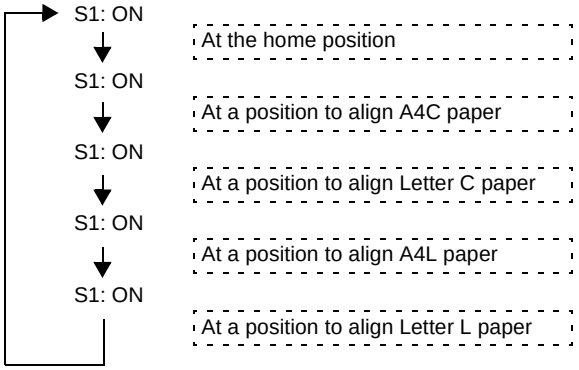

(7) Stapling Unit CD Movement

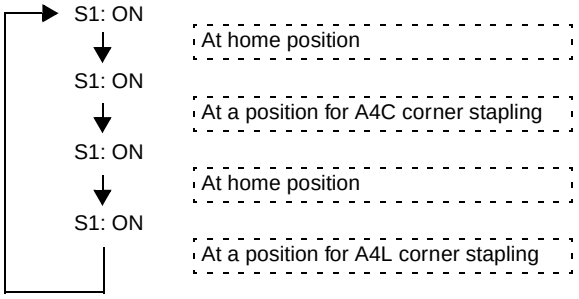

(8) Exit Roller/Rolls Spacing

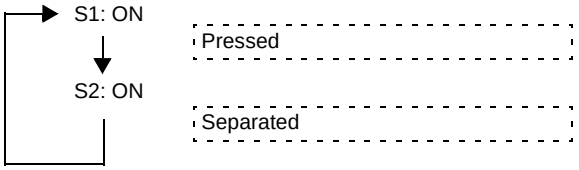

(9) Storage Roller/Rolls Spacing

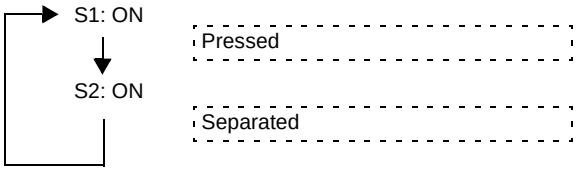

(10) Elevator Tray Operation

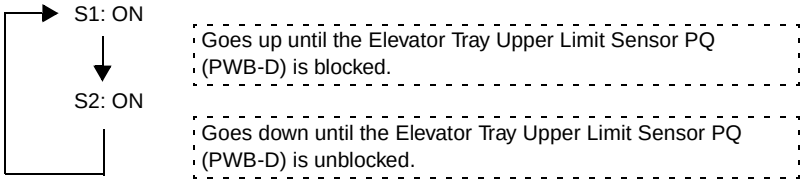

(11) Sensor Test

Sensor	State	LED			
		1	2	3	4
Elevator Tray Upper Limit Sensor PQ (PWB-D)	Unblocked	❍	❍	❍	●
Storage Sensor (PC3)	Blocked	❍	❍	●	❍
Lower Entrance Sensor (PC2)	Blocked	❍	●	❍	❍
Upper Entrance Sensor (PC4)	Blocked	●	❍	❍	❍

●: ON ❍: OFF

DIS/REASSEMBLY, ADJUSTMENT



Blank page

1. DISASSEMBLY AND REASSEMBLY

1-1. Maintenance Schedule

- To ensure good copies and an extended service life of the Finisher, it is recommended that the maintenance jobs described in this schedule be carried out.

PM Parts	Cleaning (K)	Tools Used for Cleaning	Possible Malfunction	Life Counter
Rollers/Rolls	300	Alcohol, water	Transport failure	Sorter/Finisher
Paddles	300	Alcohol, water	Transport failure	

NOTES

1. This information is subject to change without notice.
2. K = 1,000 copies
3. Upon PM service, check the Punch Trash Box and dump trash as may be necessary.

1-2. Removal of the Exterior Parts

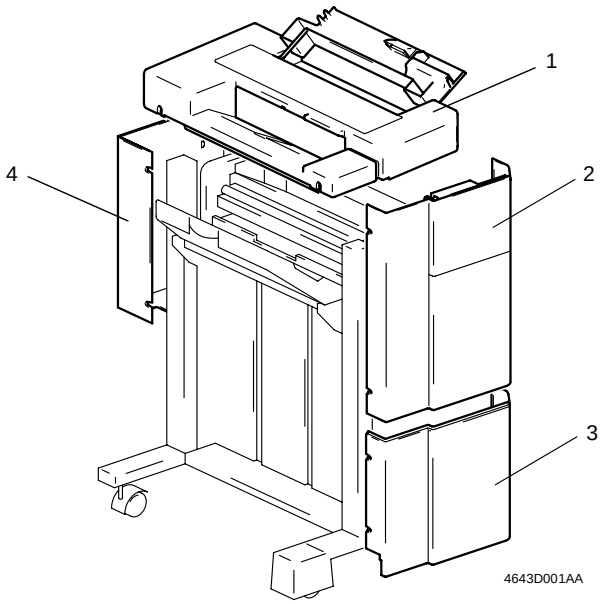

No.	Part Name	Removal Procedure
1	Upper Cover	Open the Misfeed Clearing Cover and remove one screw; then loosen three screws and take off the cover.
2	Upper Front Cover	Loosen four screws and take off the cover.
3	Lower Front Cover	Loosen two screws and take off the cover.
4	Rear Cover	Remove one screw, loosen three screws, and take off the cover.

1-3. Removal of the Stapling Unit

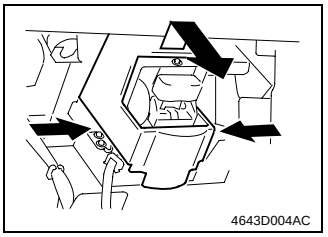

1. Holding both sides of the cover, lift the cover up and take it off.

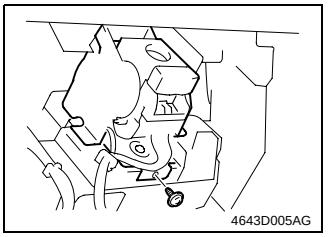

2. Remove one screw and remove the Stapling Unit from the moving cradle.
3. Remove the screw, unplug the connector, and remove the Stapling Unit.

2. ADJUSTMENTS

2-1. Adjustment of the Solenoids

(1) Adjustment of the Upper/Lower Entrance Switching Solenoid (SL1)

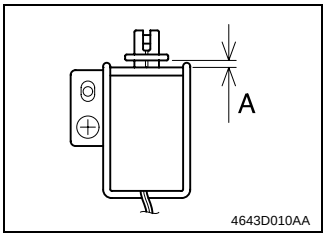

1. Loosen one screw that secures the solenoid in position.
2. Move the solenoid up or down and, when dimension A measures 4.4 mm, tighten the screw.

(2) Adjustment of the 1st Tray Entrance Selecting Solenoid (SL2)

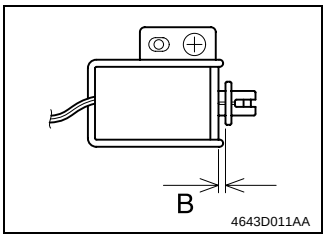

1. Loosen one screw that secures the solenoid in position.
2. Move the solenoid to the right or left and, when dimension B measures 3.6 mm, tighten the screw.

2-2. Timing Belt Tension Adjustment

(1) Adjustment of the Upper Entrance Motor (M4) Timing Belt

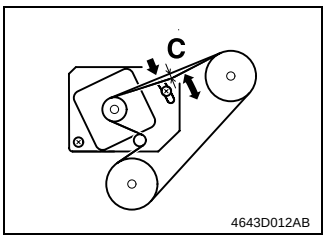

1. Loosen two screws.
2. Move the mounting bracket and, when the belt deflects 4 mm at C, tighten the two screws.

(2) Adjustment of the Lower Entrance Motor (M2) Timing Belt

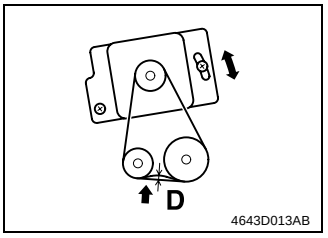

1. Loosen two screws.
2. Move the mounting bracket and, when the belt deflects 2 mm at D, tighten the two screws.

(3) Adjustment of the Exit Motor (M3) Timing Belt

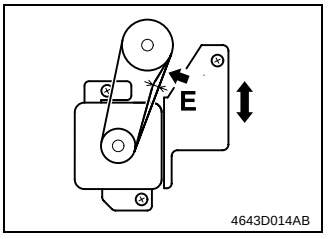

1. Loosen three screws.
2. Move the mounting bracket and, when the belt deflects 3 mm at E, tighten the three screws.

2-3. Adjustment of the Elevator Tray Upper Limit Sensor

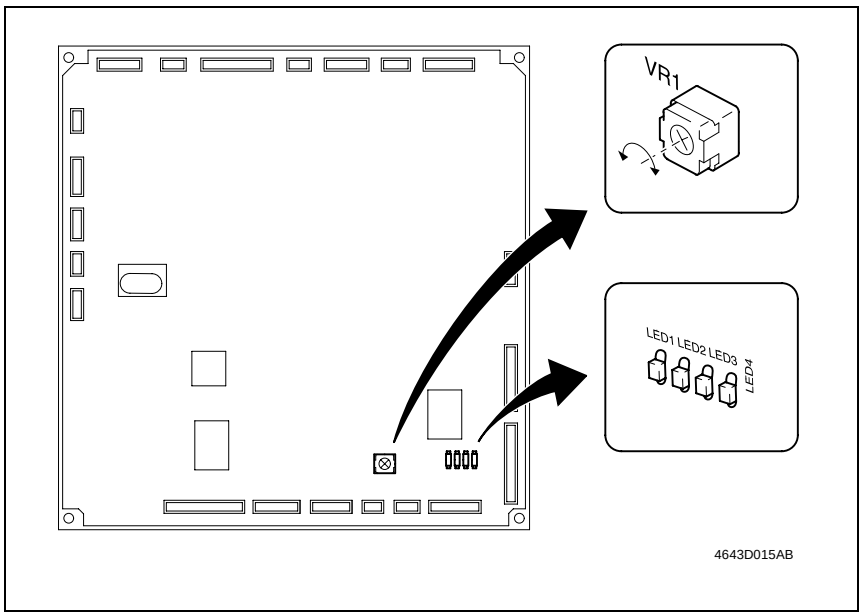

1. Set up the sensor test mode.
2. Turn VR1 on PWB-A fully counterclockwise.
3. Using a sheet of paper, block the Elevator Tray Upper Limit Sensor LED (PWB-C).
4. Check that LED4 on PWB-A turns OFF. If it stays ON, slowly turn VR1 clockwise and stop turning it as soon as the LED turns OFF.

Blank page

TROUBLESHOOTING



Blank page

1. SENSOR CHECK

- To permit easy and safe checks of sensors, the sensor input data are checked when the copier and the Finisher are in the standby state (including a misfeed, malfunction, and closure failure condition), thereby determining if correct signals are properly input to the sensors.

1-1. Sensor Check Screen

- From the “Tech. Rep. Mode” menu, select “State Confirm” and then “I/O Check.”
- The following screens are only typical and port data may look differently on actual copiers.

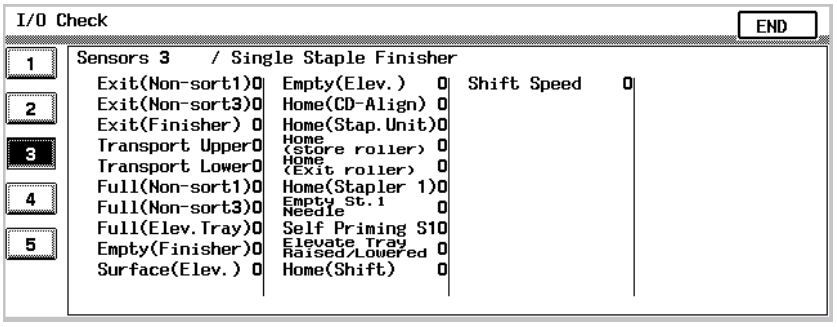

4684T101

1-2. Sensor Check List

<Sensors 4>

Symbol	Panel Display	Signal Name	Operation Characteristics/Panel Display		Input Board	CN/PJ No.
			1	0		
PC1	Exit (Non-sort1)	1st Tray Exit Sensor	Paper present	Paper not present	Control Board (PWB-A)	PJ19A-6
PC19	Exit (Non-sort3)	3rd Tray Exit Sensor	Paper present	Paper not present		PJ14A-6
PC3	Exit (Finisher)	Storage Sensor	Paper present	Paper not present		PJ20A-3
PC4	Transport Upper	Upper Entrance Sensor	Paper present	Paper not present		PJ20A-9
PC2	Transport Lower	Lower Entrance Sensor	Paper present	Paper not present		PJ19A-8
PC6	Full (Non-sort1)	1st Tray Full Detecting Sensor	Blocked	Unblocked		PJ19A-3
PC20	Full (Non-sort3)	3rd Tray Full Detecting Sensor	Paper present	Paper not present		PJ14A-3
PC7	Full (Elev. Tray)	Elevator Tray Full Detecting Sensor	Blocked	Unblocked		PJ19A-12
PC5	Empty (Finisher)	Finisher Tray Paper Detecting Sensor	Paper present	Paper not present		PJ25A-2
PWB-D	Surface (Elev.)	Elevator Tray Upper Limit Sensor PQ	Paper present	Paper not present		PJ21A-2
PC8	Empty (Elev.)	Elevator Tray Paper Detecting Sensor	Blocked	Unblocked		PJ25A-9
PC9	Home (CD-Align)	CD Aligning Home Position Sensor	Blocked	Unblocked		PJ25A-6
PC14	Home (Stap. Unit)	Staple Home Position Sensor	Blocked	Unblocked		PJ22A-3
PC12	Home (store roller)	Storage Roller Home Position Sensor	Blocked	Unblocked		PJ20A-6

Symbol	Panel Display	Signal Name	Operation Characteristics/Panel Display		Input Board	CN/PJ No.
			1	0		
PC13	Home (Exit roller)	Exit Rolls Home Position Sensor	Blocked	Unblocked	Control Board (PWB-A)	PJ19A-15
–	Home (Stapler 1)	Stapler Home Sensor 1	Unblocked	Blocked		PJ23A-2
–	Empty St. 1 Needle	Staple Empty Detecting Sensor 1	Unblocked	Blocked		PJ23A-4
–	Self Priming S1	Self-Priming Sensor 1	Unblocked	Blocked		PJ23A-3
–	✻Home (Stapler 2)	Stapler Home Sensor 2	Unblocked	Blocked		PJ24A-2
–	✻Empty St. 2 Needle	Staple Empty Detecting Sensor 2	Unblocked	Blocked		PJ24A-4
–	✻Self Priming S2	Self-Priming Sensor 2	Unblocked	Blocked		PJ24A-3
S2 S3	Elevate Tray Raised/ Lowered	Elevator Tray Upper Limit Sensor, Elevator Tray Lower Limit Sensor	ON	OFF		PJ4A-4
PC10	Home (Shift)	Shift Home Position Sensor	Blocked	Unblocked		PJ25A-12
PC11	Shift Speed	Shift Motor Pulse Sensor	Unblocked	Blocked		PJ25A-14

1-3. Sensor Check Procedure

1. When a misfeed or malfunction occurs, select “Tech. Rep. Mode” → “State Confirm” → “I/O Check” → “Sensors 4.”
2. Check the input of the sensor that is probably faulty.

[Example] The 1st Tray Exit Sensor is probably responsible for a paper transport misfeed:
<Procedure>
1. Clear the misfeed and reset the misfeed condition.
2. Select “Tech. Rep. Mode” → “State Confirm” → “I/O Check” → “Sensors 4.”
3. Check that the data for “Exit (Non-sort1)” on the screen is “0.”
4. Check that the data changes from “0” to “1” when the 1st Tray Exit Sensor (PC1) is blocked.

1: PC1 is operational; 0: PC1 is faulty

2. MISFEED DETECTION AND TROUBLESHOOTING PROCEDURES

2-1. Misfeed Detecting Sensor Layout

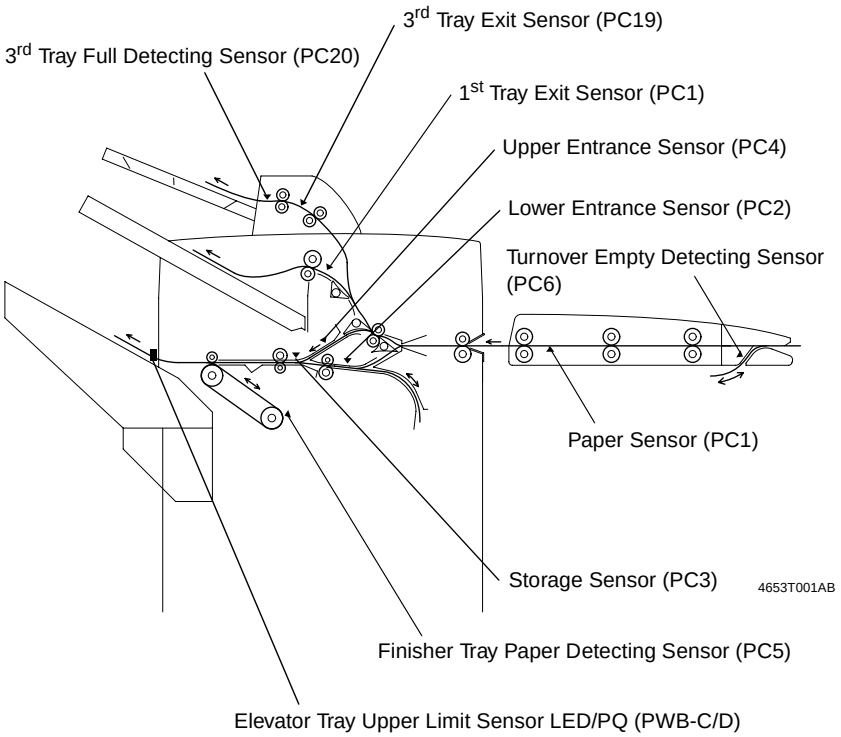

2-2. Misfeed Detection

- When a misfeed occurs, the Touch Panel of the copier gives a message and shows the locations where the misfeed has occurred and paper is located.

Misfeed location	Blinking
Paper location	ON

- The misfeed display can be reset by unlocking and sliding the Finisher away from the copier, and the sliding the Finisher back against the copier.

Type	Detection Timing
Transport misfeed	• The Paper Sensor (PC1) of the Horizontal Transport Unit is not blocked even after the lapse of a given period of time after the leading edge of the paper has unblocked the Paper Exit Sensor of the copier. • The Paper Sensor (PC1) of the Horizontal Transport Unit is not unblocked even after the lapse of a given period of time after the leading edge of the paper has blocked the sensor. • The 1st Tray Exit Sensor (PC1) is not blocked even after the lapse of a given period of time after the leading edge of the paper has blocked the Paper Sensor (PC1) of the Horizontal Transport Unit. • The Upper Entrance Sensor (PC4) is not blocked even after the lapse of a given period of time after the leading edge of the paper has blocked the Paper Sensor (PC1) of the Horizontal Transport Unit. • The Lower Entrance Sensor (PC2) is not blocked even after the lapse of a given period of time after the leading edge of the paper has blocked the Paper Sensor (PC1) of the Horizontal Transport Unit.
Misfeed at the 1st Tray exit	• The 1st Tray Exit Sensor (PC1) is not unblocked even after the lapse of a given period of time after it has been blocked.
Misfeed at the 3rd Tray exit (FT-331)	• The 3rd Tray Exit Sensor (PC19) is not unblocked even after the lapse of a given period of time after it has been blocked.
Misfeed at the Elevator Tray exit	• The Storage Sensor (PC3) is not unblocked even after the lapse of a given period of time after it has been blocked.
Paper stack exit misfeed	The Finisher Tray Paper Detecting Sensor (PC5) remains activated when a copy stack, which has been stapled together, is fed out.
Staple misfeed	The Staple Home Position Sensor (PC14) is not blocked even after the lapse of a given period of time after the Stapling Motor has started turning forward, and the sensor is blocked within a given period of time after the Stapling Motor has thereafter started turning backward.

2-3. Misfeed Troubleshooting Procedures

(1) Transport misfeed

Step	Check	Result	Action
1	Paper meets specifications.	NO	Change paper.
2	Paper is curled, wavy, or damp.	YES	Change paper. Instruct user in how to store paper.
3	Foreign object on paper path, or dirty or deformed paper path.	YES	Clean or change.
4	Dirty, deformed, or worn roller or roll.	YES	Clean or change.
5	Entrance Motor (M1) turns after Start key has been pressed.	NO	Change M1 or PWB-A.
6	Upper Entrance Motor (M4) turns after Start key has been pressed.	NO	Change M4 or PWB-A.
7	Lower Entrance Motor (M2) turns after Start key has been pressed.	NO	Change M2 or PWB-A.
8	Paper Sensor (PC1) I/O Check: Horiz. Transport of Sensors	NO	Correct actuator. Change PC1.
9	Upper Entrance Sensor (PC4) I/O Check: Transport Upper of Sensors	NO	Correct actuator. Change PC4.
10	Lower Entrance Sensor (PC2) I/O Check: Transport Lower of Sensors	YES	Change PWB-A.
		NO	Correct actuator. Change PC2.
11	Storage Sensor (PC3) I/O Check: Exit (Finisher) of Sensors	YES	Change PWB-A.
		NO	Correct actuator. Change PC3.

(2) Misfeed at the 1st Tray exit

Step	Check	Result	Action
1	Paper meets specifications.	NO	Change paper.
2	Paper is curled, wavy, or damp.	YES	Change paper. Instruct user in how to store paper.
3	Foreign object on paper path, or dirty or deformed paper path.	YES	Clean or change.
4	Dirty, deformed, or worn roller or roll.	YES	Clean or change.
5	1st Tray Exit Sensor (PC1) I/O Check: Exit (Non-sort) of Sensors	YES	Change PWB-A.
		NO	Correct actuator. Change PC1.

(3) Misfeed at the 3rd Tray exit (FT-331)

Step	Check	Result	Action
1	Paper meets specifications.	NO	Change paper.
2	Paper is curled, wavy, or damp.	YES	Change paper. Instruct user in how to store paper.
3	Foreign object on paper path, or dirty or deformed paper path.	YES	Clean or change.
4	Dirty, deformed, or won roller or roll.	YES	Clean or change.
5	3rd Tray Exit Sensor (PC19) I/O Check: The 3rd Tray: Exit	YES	Change PWB-A.
		NO	Correct actuator. Change PC19.

(4) Misfeed at the Elevator Tray exit

Step	Check	Result	Action
1	Paper meets specifications.	NO	Change paper.
2	Paper is curled, wavy, or damp.	YES	Change paper. Instruct user in how to store paper.
3	Foreign object on paper path, or dirty or deformed paper path.	YES	Clean or change.
4	Dirty, deformed, or worn roller or roll.	YES	Clean or change.
5	Exit Motor (M3) turns after Start key has been pressed.	NO	Change M3 or PWB-A.
6	Storage Sensor (PC3) I/O Check: Exit (Finisher) of Sensors	YES	Change PWB-A.
		NO	Change PC3.

(5) Paper stack exit misfeed

Step	Check	Result	Action
1	Paper meets specifications.	NO	Change paper.
2	Paper is curled, wavy, or damp.	YES	Change paper. Instruct user in how to store paper.
3	Foreign object on paper path, or dirty or deformed paper path.	YES	Clean or change.
4	Dirty, deformed, or worn roller or roll.	YES	Clean or change.
5	Exit Motor (M3) turns after Start key has been pressed.	NO	Change M3 or PWB-A.
6	Finisher Tray Paper Detecting Sensor (PC5) I/O Check: Empty (Finisher) of Sensors	YES	Change PWB-A.
		NO	Change PC5.

(6) Staple misfeed

Step	Check	Result	Action
1	Stapling Motor is overloaded.	YES	Check drive couplings.
		NO	Change Stapling Unit or PWB-A.

3. MALFUNCTION DETECTION AND TROUBLE-SHOOTING PROCEDURES

3-1. Malfunction Detection

- Any of the following operation faults can be detected and the corresponding malfunction code is displayed on the copier Touch Panel.
- The malfunction detection can be reset by opening and closing the Front Door of the copier.

Malfunction Code	Description	Detection Timing
C0B20	Stapling Unit Moving Motor (M6) drive malfunction	The Staple Home Position Sensor (PC14) does not go HIGH even after the lapse of a given period of time after M6 has been energized (to return the Stapling Unit to its home position).
C0B30	CD Aligning Motor (M5) drive malfunction	The CD Aligning Home Position Sensor (PC9) does not go LOW even after the lapse of a given period of time after M5 has been energized (to return the Aligning Plate to its home position).
C0B48	Exit Roller/Rolls Spacing Motor (M13) drive malfunction	The Exit Rolls Home Position Sensor (PC13) does not go HIGH even after the lapse of a given period of time after M13 has been energized (to start spacing/pressure sequence).
C0B4A	Storage Roller/Rolls Spacing Motor (M12) drive malfunction	The Storage Roller Home Position Sensor (PC12) does not go HIGH even after the lapse of a given period of time after M12 has been energized (to start spacing/pressure sequence).
C0B50	Stapling Motor 1 drive malfunction	Stapling Motor 1 is not deenergized even after the lapse of a given period of time after it has been energized (to start a stapling sequence).
C0B54	Stapling Motor 2 drive malfunction	Stapling Motor 2 is not deenergized even after the lapse of a given period of time after it has been energized (to start a stapling sequence).
C0B80	Shift Motor (M8) drive malfunction	• The Shift Home Position Sensor (PC10) does not go HIGH even after the lapse of a given period of time after M8 has been energized (to start returning the Elevator Tray to its home position). • The Shift Home Position Sensor (PC10) does not go LOW even after the lapse of a given period of time after M8 has been energized (to start moving the Elevator Tray for job offset).
C0BA0	Elevator Motor (M7) drive malfunction	• The Elevator Tray Upper Limit Sensor PQ (PWB-D) is not activated even after the lapse of a given period of time after M7 has been energized (to start raising the Elevator Tray). • The Elevator Tray Upper Limit Switch (S2) or Elevator Tray Lower Limit Switch (S3) is actuated after M7 has been energized.

3-2. Malfunction Troubleshooting Procedures

(1) C0B20

Step	Check	Result	Action
1	Staple Home Position Sensor (PC14) I/O Check: Home (Stap. Unit) of Port Signals	NO	Change PC14.
2	Turn OFF the Power Switch, move the Stapling Unit out of its home position, and turn ON the Power Switch. Drive of the Stapling Unit Moving Motor (M6) at this time	YES	Change PWB-A.
		NO	Change M6 or PWB-A.

(2) C0B30

Step	Check	Result	Action
1	CD Aligning Home Position Sensor (PC9) I/O Check: Home (CD Align) of Port Signals	NO	Change PC9.
2	Turn OFF the Power Switch, move the Aligning Plate out of its home position, and turn ON the Power Switch. Drive of the CD aligning Motor (M6) at this time	YES	Change PWB-A.
		NO	Change M5 or PWB-A.

(3) C0B48

Step	Check	Result	Action
1	Exit Rolls Home Position Sensor (PC13) I/O Check: Home (Exit roller) of Port Signals	NO	Change PC13.
2	Drive of the Exit Roller/Rolls Spacing Motor (M13) when the Power Switch is turned OFF and ON	YES	Change PWB-A.
		NO	Change M13 or PWB-A.

(4) C0B4A

Step	Check	Result	Action
1	Storage Roller Home Position Sensor (PC12) I/O Check: Home (Store roller) of Port Signals	NO	Change PC12.
2	Drive of the Storage Roller/Rolls Spacing Motor (M12) when the Power Switch is turned OFF and ON	YES	Change PWB-A.
		NO	Change M12 or PWB-A.

(5) C0B50

Step	Check	Result	Action
1	Stapling Motor 1 is overloaded.	YES	Check drive coupling.
		NO	Change Stapling Unit 1 or PWB-A.

(6) C0B80

Step	Check	Result	Action
1	Shift Home Position Sensor (PC10) I/O Check: Home (Shift) of Port Signals	NO	Change PC10.
2	Shift Motor Pulse Sensor (PC11) I/O Check: Shift Speed of Port Signals	NO	Change PC11.
3	Shift Motor (M8) operation: The voltage across PJ5A-4 on PWB-A and GND change from LOW to HIGH after the Start key has been pressed in the Sort mode.	YES	Change M8.
		NO	Change PWB-A.

(7) C0BA0

Step	Check	Result	Action
1	Elevator Tray Upper Limit Sensor PQ (PWB-D) I/O Check: Surface (Elev.) of Sensors	NO	Change PWB-C or PWB-D.
2	Elevator Tray Upper Limit Switch (S2) I/O Check: Elevate Tray Raised/Lowered of Port Signals	NO	Change S2.
3	Elevator Tray Lower Limit Switch (S3) I/O Check: Elevate Tray Raised/Lowered of Port Signals	NO	Change S3.
4	Elevator Motor (M7) operation: The voltage across PJ5A-1 on PWB-A and GND (when the Elevator Tray goes down) and that across PJ5A-2 on PWB-A and GND (when the Elevator Tray goes up) goes from LOW to HIGH after the Start key has been pressed in the Sort mode.	YES	Change M7.
		NO	Change PWB-A.