FrameMaker Ver.5.5(PC) PF-232 OPTION FOR 8020/8031
02.08.26

PF-232

SERVICE MANUAL



Blank page

CONTENTS

GENERAL,
MECHANICAL/ELECTRICAL

1. SPECIFICATIONS M-1
2. PARTS IDENTIFICATION M-2
3. CROSS-SECTIONAL VIEW M-2
4. DRIVE SYSTEM M-3
5. ELECTRICAL COMPONENTS LAYOUT M-3
6. MECHANISM AND CONTROL M-4
   - 6-1. Vertical Transport Drive Mechanism M-4
   - 6-2. Paper Take-Up Mechanism M-4
   - 6-3. Paper Take-Up Control M-4
   - 6-4. Edge Guides and Trailing Edge Stop M-5
   - 6-5. Paper Lifting Plate M-5
   - 6-6. Double Feed Prevention M-6
   - 6-7. Drawer-in-Position Detection M-6
   - 6-8. Paper Near Empty Detection M-7
   - 6-9. Paper Empty Detection M-7
   - 6-10.Paper Level Indicator LED M-8
   - 6-11.Paper Size Detection M-9
   - 6-12.Paper Dehumidifying Heater (Option) M-10

DIS/REASSEMBLY, ADJUSTMENT

1. DISASSEMBLY D-1
   - 1-1. Maintenance Schedule D-1
   - 1-2. Removal of the Paper Take-Up Roll D-2
   - 1-3. Removal of the Separator Roller Assy D-3
   - 1-4. Cleaning of the Paper Take-Up Roll D-4
   - 1-5. Cleaning of the Separator Roll D-4
   - 1-6. Cleaning of the Vertical Transport Roller/Rolls D-4
2. ADJUSTMENT D-5
   - 2-1. Reference Position Adjustment D-5

MISFEED DETECTION

1. MISFEED DETECTION T-1
   - 1-1. Location of Misfeed Detecting Sensors T-1
   - 1-2. Misfeed Detection Timing T-2

Blank page

GENERAL, MECHANICAL/ELECTRICAL



Blank page

1. SPECIFICATIONS

Type	:	Add-on paper source unit
Installation	:	Mounted beneath Upper Drawer of copier
Type of Copy Paper	:	Plain paper
Paper Sizes	:	B5L/C to A3L or 8-1/2 × 11LC to 11 × 17L
Paper Weight	:	64 to 90 g/m^2 or 17 to 24 lbs.
Registration	:	Center
Capacity	:	500 sheets
Power Requirements	:	DC24 V ± 10 %, DC5.1 V ± 5 % (supplied from copier)
Max. Power Consumption	:	16.8 W
Dimensions	:	Width ... 535 mm or 21 in Depth ... 568 mm or 22-1/4 in Height ... 127 mm or 5 in
Weight	:	8.5 kg or 18-3/4 lbs.

2. PARTS IDENTIFICATION

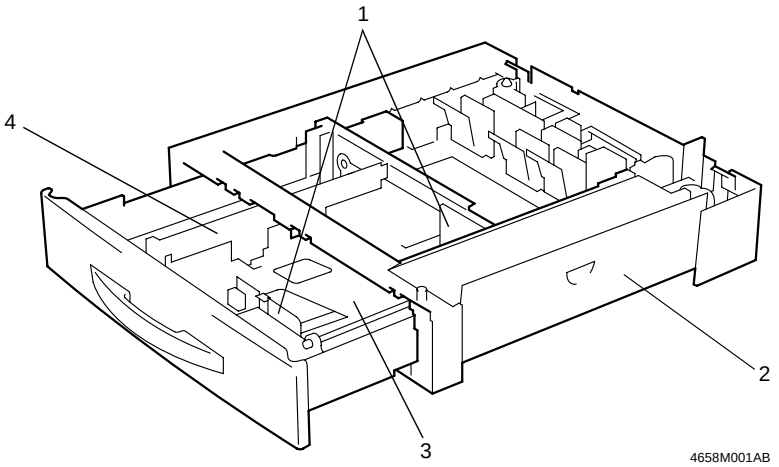

1. Edge Guides
2. Right Side Door
3. Paper Lifting Plate
4. Trailing Edge Stop

3. CROSS-SECTIONAL VIEW

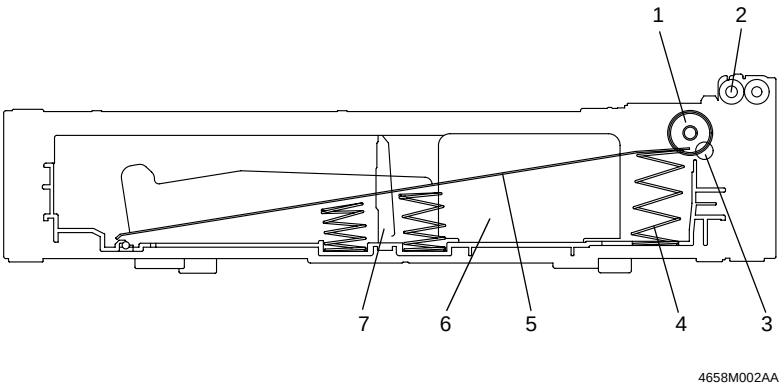

1. Paper Take-Up Roll
2. Vertical Transport Roller
3. Separator Roll
4. Paper Lifting Spring
5. Paper Lifting Plate
6. Edge Guide
7. Trailing Edge Stop

4. DRIVE SYSTEM

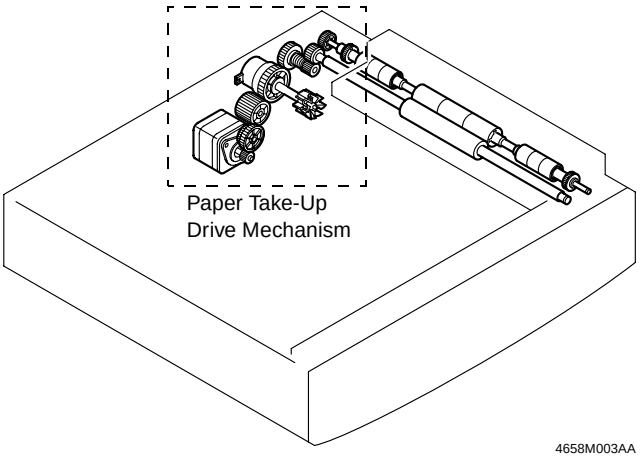

5. ELECTRICAL COMPONENTS LAYOUT

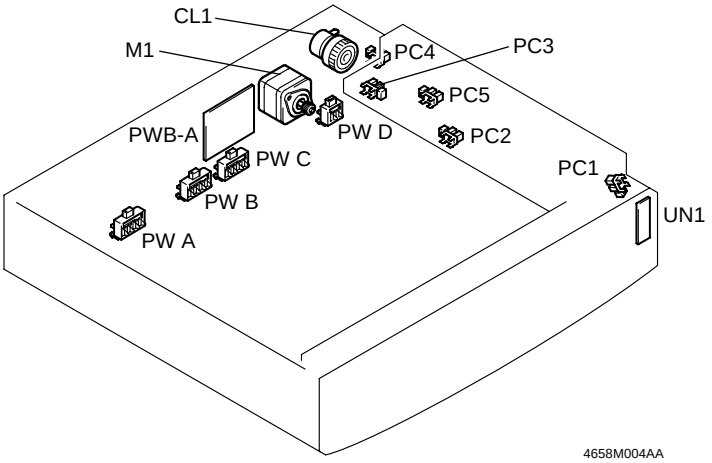

Symbol	Name	Symbol	Name
PWB-A	Control Board	PC4	Door Set Sensor
M1	Paper Take-Up Motor	PC5	Double Feed Sensor
CL1	Paper Take-Up Clutch	SW A	Paper Size Detection Switch 1
UN1	Paper Near Empty Board	SW B	Paper Size Detection Switch 2
PC1	Paper Take-Up Sensor	SW C	Paper Size Detection Switch 3
PC2	Paper Empty Sensor	SW D	Drawer Set Switch
PC3	Paper Near Empty Sensor		

6. MECHANISM AND CONTROL

6-1. Vertical Transport Drive Mechanism

- The Paper Take-Up Motor provides the drive for the Vertical Transport Roller.

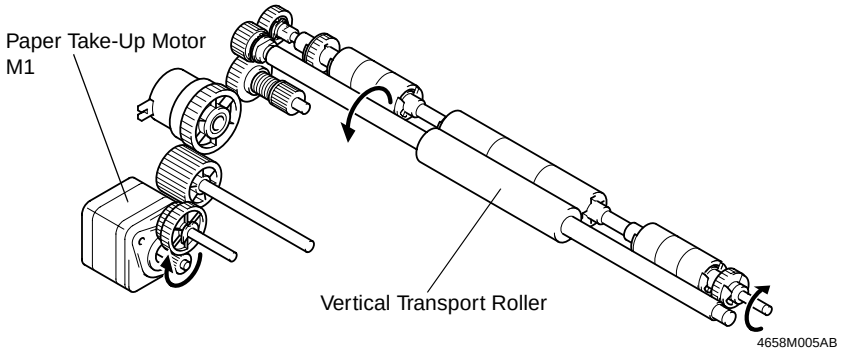

6-2. Paper Take-Up Mechanism

- Paper take-up drive is provided by the Paper Take-Up Motor via the Paper Take-Up Clutch.

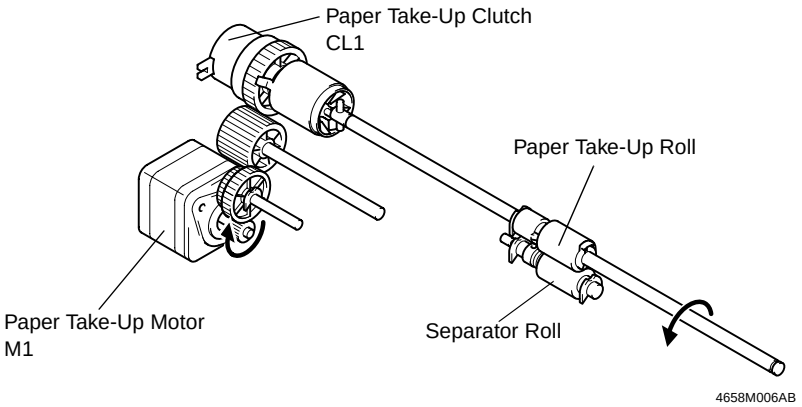

6-3. Paper Take-Up Control

- The Paper Take-Up Clutch is energized and deenergized by the signals output from pins 13 and 14 of PJ3A on the Control Board.

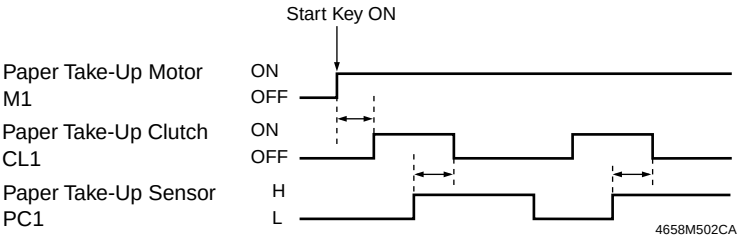

6-4. Edge Guides and Trailing Edge Stop

- The Trailing Edge Stop can be removed and reinstalled to the specified position corresponding to the size of the paper to be loaded.
- The Edge Guides can be slid to the exact size of the paper to be loaded.

Trailing Edge Stop

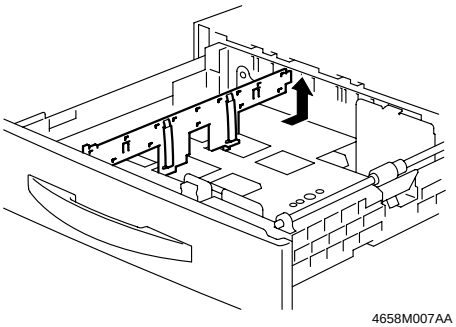

4658M007AA

Edge Guides

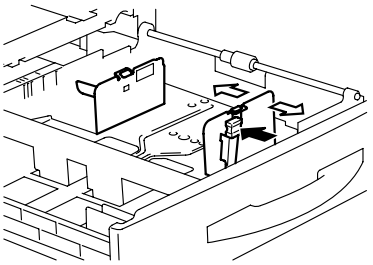

4658M008AA

6-5. Paper Lifting Plate

- The Paper Lifting Plate is locked into position when it is pressed down. It is unlocked automatically when the drawer is slid into the unit.
- The Paper Lifting Plate is pushed upward by the Paper Lifting Springs at all times.

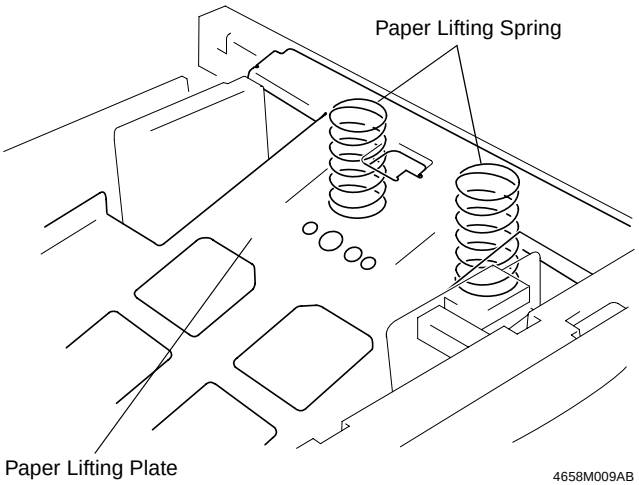

4658M009AB

6-6. Double Feed Prevention

- If a sheet of paper reaches the Double Feed Sensor earlier than a predetermined period of time after the paper take-up sequence has been started, the sequence is temporarily halted. After an adequate period of time thereafter, the paper take-up sequence is restarted again so that a given distance is provided between sheets of paper.

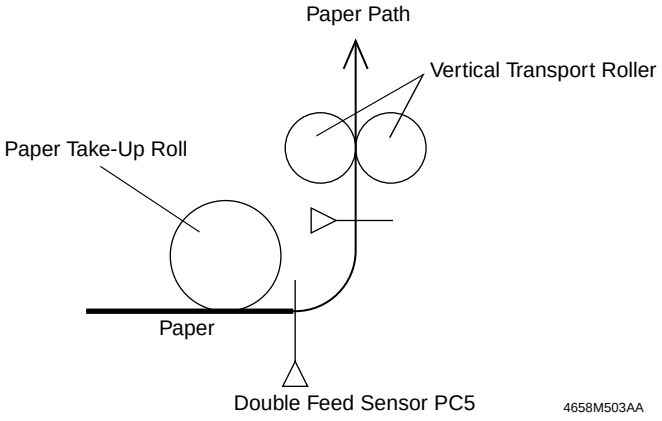

6-7. Drawer-in-Position Detection

- When the drawer is slid into the unit, the Drawer Set Switch is actuated, allowing the copier to determine that the drawer has been slid into position.

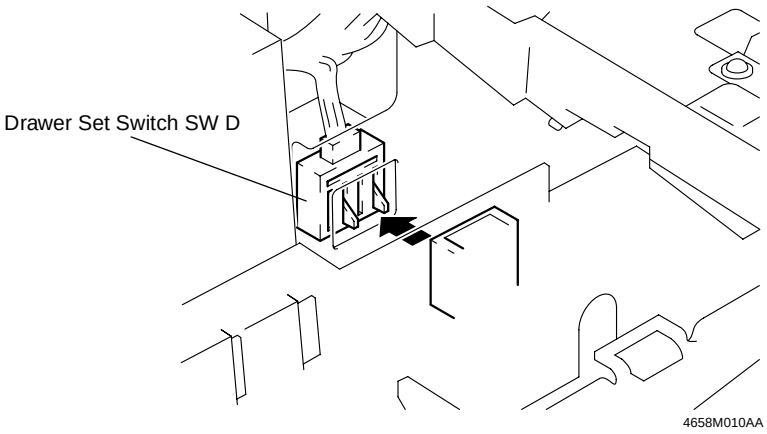

6-8. Paper Near Empty Detection

- The Paper-Near-Empty Sensor detects a paper-near-empty condition in the drawer.
- A given number of sheets of paper has been determined as the basis for detection of a paper-near-empty condition.

	Predetermined No. of Sheets (Paper Level)
Paper-Near-Empty Detected	50 ± 30 sheets

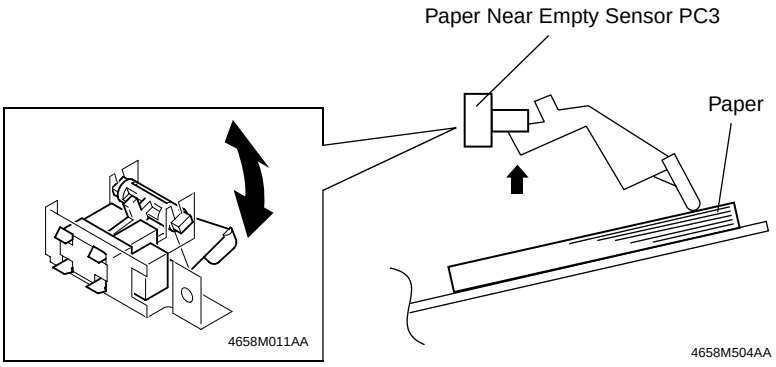

6-9. Paper Empty Detection

- The Paper Empty Sensor detects a paper-empty condition in the drawer.

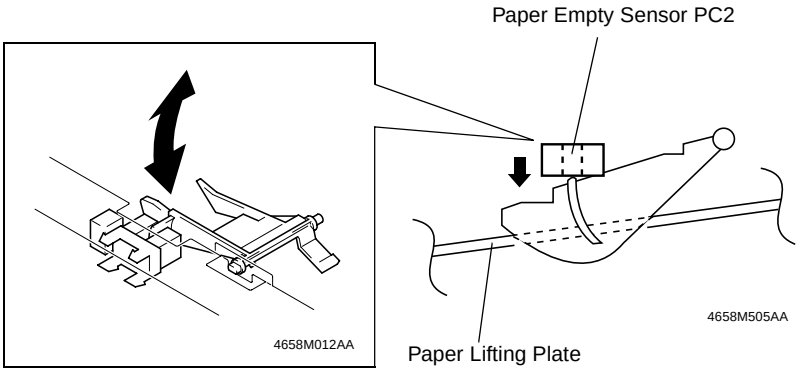

6-10. Paper Level Indicator LED

- An LED is used to indicate different levels of the paper loaded in the drawer.

Drawer Condition	LED Indication
Open	ON
Paper empty	ON
Paper near empty	Blinking
Paper loaded	OFF

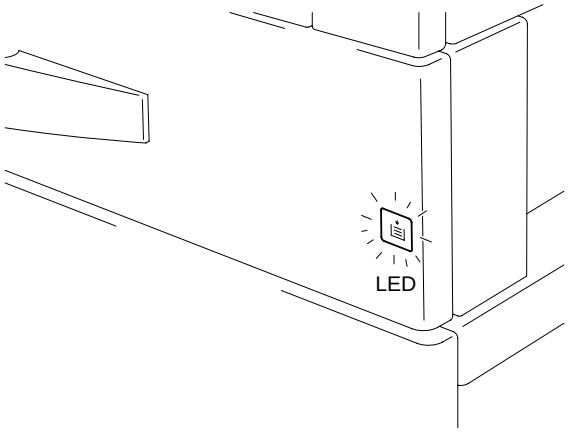

4658M013AA

6-11. Paper Size Detection

- When the drawer is slid into the unit, some of the contacts of the three Paper Size Detecting Switches are closed according to the position of the Edge Guides and Trailing Edge Stop. The combination of the open and closed states of these contacts of the Paper Size Detecting Switches determines a specific paper size.

	SW A				SW B				SW C			
	FD1	FD2	FD3	FD4	FD5	FD6	FD7	FD8	FD9	FD10	FD11	CD1
Leager L	H	H	H	H	H	H	H	H	H	H	H	L
A3L	L	H	H	H	H	H	H	H	H	H	H	L
B4L	H	L	H	H	H	H	H	H	H	H	H	H
11 × 14L	H	H	L	H	H	H	H	H	H	H	H	L
Legal L	H	H	L	H	H	H	H	H	H	H	H	H
F4	H	H	H	L	H	H	H	H	H	H	H	H
A4L	H	H	H	H	L	H	H	H	H	H	H	H
Letter L	H	H	H	H	H	L	H	H	H	H	H	H
B5L	H	H	H	H	H	H	L	H	H	H	H	H
Letter C	H	H	H	H	H	H	H	L	H	H	H	L
A4C	H	H	H	H	H	H	H	H	L	H	H	L
G, Letter C	H	H	H	H	H	H	H	H	H	L	H	H
B5C	H	H	H	H	H	H	H	H	H	H	L	H

✻ ON: L, OFF: H

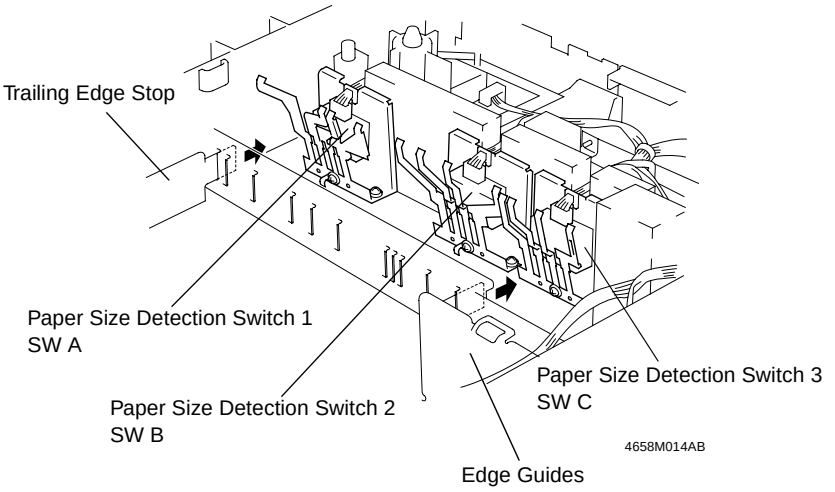

6-12. Paper Dehumidifying Heater (Option)

- The Paper Dehumidifying Heater prevents an image transfer failure from occurring, caused by paper that gets damp under changing environmental conditions (temperature and humidity).

Conditions	Paper Dehumidifying Heater (Heater Switch ON)
Power cord plugged in	ON
Power Switch OFF	ON
Shut off	ON
Copy cycle	OFF
Predrive (Imaging Unit Motor energized)	OFF

DIS/REASSEMBLY, ADJUSTMENT



Blank page

1. DISASSEMBLY

1-1. Maintenance Schedule

- To ensure good copies and an extended service life of the this Unit, it is recommended that the maintenance jobs described in this schedule be carried out.

PM Parts	Maintenance Schedule Cycle (K)		Tools Used for Cleaning	Parts No.	QTY	Counter/ Life	Reference Page
	Clean	Replace					
Paper Take-Up Roll	❍	200	Cloth, alcohol	111T5101✻	1	2nd. 3rd. 4th.	☞ D-2
Separator Roll Assy	❍	200		111T-501✻	1		☞ D-3
Vertical Transport Roller	❍	–		–	1		☞ D-4
Vertical Transport Rolls	❍	–		–	9		☞ D-4

K=1,000 sheets

- The above maintenance schedule is to be based on the value of Counter/Life.
- Cleaning (indicated by "❍" in the above schedule) should be performed when a paper transport failure occurs.
- The Paper Take-Up Roll and Separator Roll Assy should be replaced at the same time.
- The above information is subject to change without notice.

1-2. Removal of the Paper Take-Up Roll

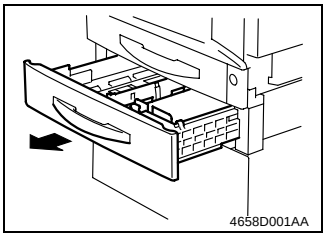

1. Slide out the drawer.

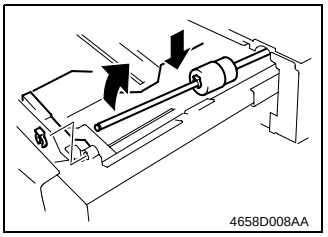

2. Lock the Paper Lifting Plate.
3. Snap off one C-clip from the Paper Take-Up Roll assy.
4. Move the Paper Take-Up Roll assy toward the rear of the unit and lift it off the bushing at the front.

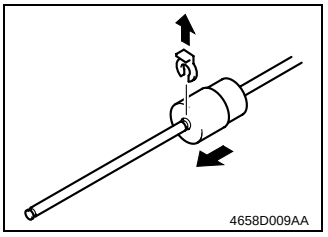

5. Snap off one C-clip and remove the Paper Take-Up Roll.

1-3. Removal of the Separator Roller Assy

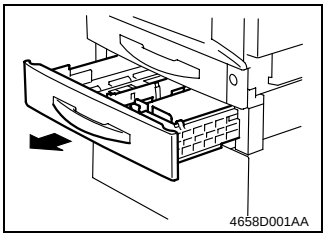

1. Slide out the drawer.

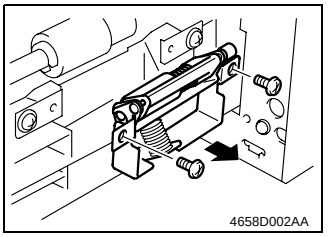

2. Remove two screws and the Separator Roll mounting bracket assy.

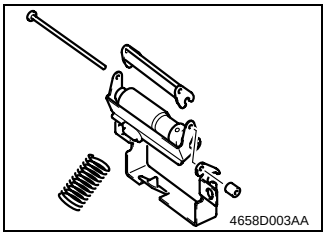

3. Remove the rubber stopper, shaft, spring, and the guide plate. Then, remove the Separator Roll fixing bracket assy.

NOTE

- *At reinstallation, make sure that the rubber stopper is on the rear side of the unit.*

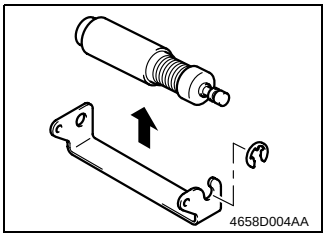

4. Snap off one E-ring and remove the Separator Roll assy.

1-4. Cleaning of the Paper Take-Up Roll

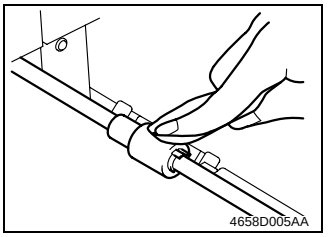

1. Slide out the drawer.
2. Dampen a soft cloth with alcohol and wipe the surface of the Paper Take-Up Roll clean of dirt.

1-5. Cleaning of the Separator Roll

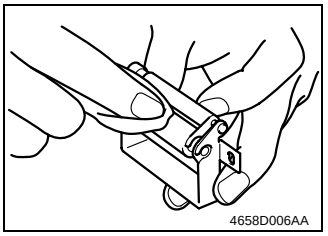

1. Slide out the drawer.
2. Remove two screws and the Separator Roll mounting bracket assy.
3. Dampen a soft cloth with alcohol and wipe the surface of the Separator Roll clean of dirt.

1-6. Cleaning of the Vertical Transport Roller/Rolls

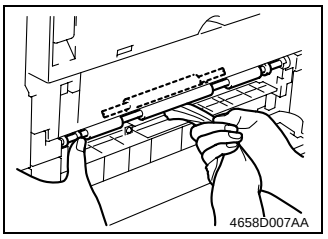

1. Slide out the drawer.
2. Open the Right Side Door.
3. Dampen a soft cloth with alcohol and, turning the knob, wipe the surfaces of the Vertical Transport Roller/Rolls clean of dirt.

2. ADJUSTMENT

2-1. Reference Position Adjustment

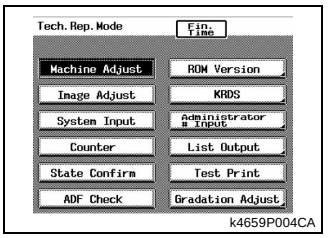

k4659P004CA

1. Press the Utility key and touch “Meter Count.”
2. Press the following keys in this order to show the Tech. Rep. mode screen: Stop → 0 → 0 → Stop → 0 → 1.
3. Touch “Machine Adjust.”

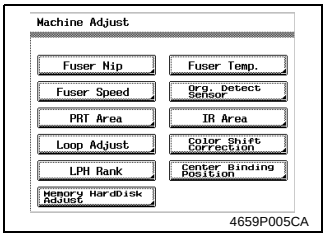

4659P005CA

4. Touch “PRT Area.”

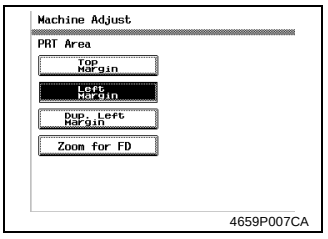

4659P007CA

5. Touch “Left Margin.”

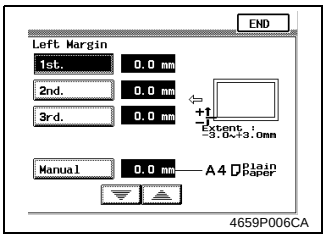

4659P006CA

6. Touch “2nd.”

NOTE

- *Use the same procedures that follow for “3rd” and “4th.”*

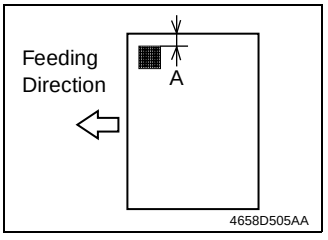

4658D505AA

7. Press the Start key to produce a test print.
8. Measure dimension A to determine if it falls within the specified range.

✻ Specifications: 3.0 ± 1.0 mm

9. Using ▼ or ▲ key, input the difference between the measured value of dimension A and the specifications.
10. Produce another test print and make a check again.

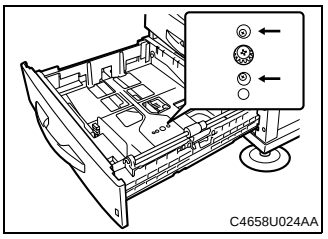
C4658U024AA

11. If the specifications are not met, perform the following steps to make an adjustment.
12. Unload paper from the drawer and loosen the two screws of the drawer.

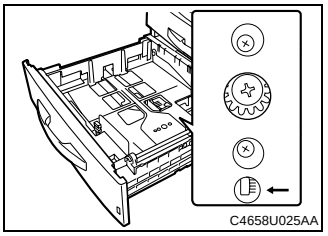
C4658U025AA

13. Watching the scale on the adjusting plate inside the drawer, move the Edge Guide as necessary.
14. Tighten the two screws. Then, produce a test print to check again.

MISFEED DETECTION



Blank page

1. MISFEED DETECTION

1-1. Location of Misfeed Detecting Sensors

- The explanations given hereunder are based on a paper feed unit configuration of the 2nd Drawer (standard) + 3rd Drawer + 4th Drawer as illustrated below.

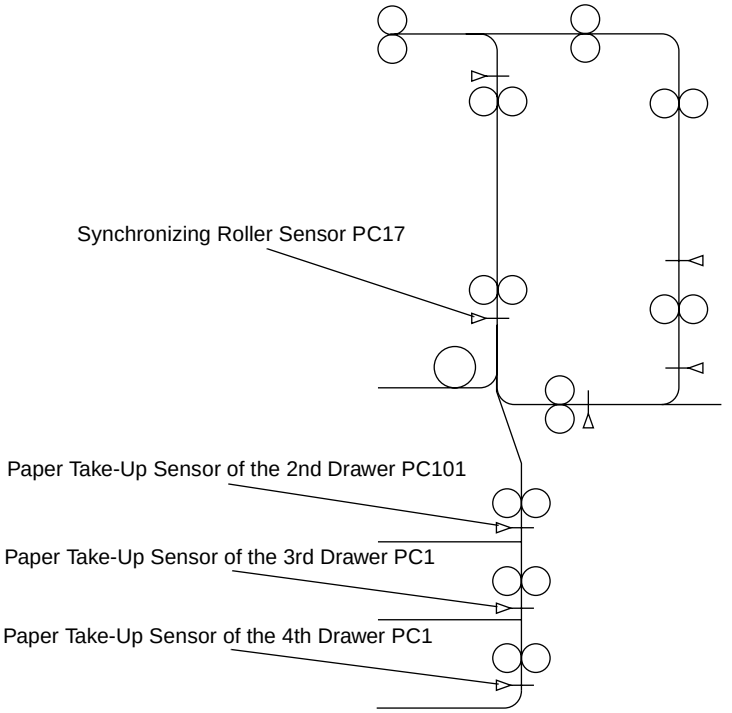

1-2. Misfeed Detection Timing

- The following lists the types of misfeed detection and detection timings for different misfeed locations.
- The symbol “L” (for the leading edge) and “T” (for the trailing edge) given in ( ) indicate the particular edge of the paper detected by the sensor.

Type	Detection Start	Detection
Paper left	Power Switch ON	Paper Take-Up Sensor of each drawer ON
	Misfeed reset	
Paper take-up failure in the 2nd Drawer	Paper Take-Up Motor of the 2nd Drawer energized	Paper Take-Up Sensor of the 2nd Drawer (L)
Paper take-up failure in the 3rd Drawer	Paper Take-Up Motor of the 3rd Drawer energized	Paper Take-Up Sensor of the 3rd Drawer (L)
Paper take-up failure in the 4th Drawer	Paper Take-Up Motor of the 4th Drawer energized	Paper Take-Up Sensor of the 4th Drawer (L)
Misfeed in the 2nd Drawer vertical transport section	Paper Take-Up Sensor of the 2nd Drawer (L)	Synchronizing Roller Sensor (L)
Misfeed in the 3rd Drawer vertical transport section	Paper Take-Up Sensor of the 3rd Drawer (L)	Paper Take-Up Sensor of the 2nd Drawer (L)
Misfeed in the 4th Drawer vertical transport section	Paper Take-Up Sensor of the 4th Drawer (L)	Paper Take-Up Sensor of the 3rd Drawer (L)
Misfeed caused by a size error	Paper Take-Up Sensor of the 2nd Drawer (L)	Paper Take-Up Sensor of the 2nd Drawer (T)
	Paper Take-Up Sensor of the 3rd Drawer (L)	Paper Take-Up Sensor of the 3rd Drawer (T)
	Paper Take-Up Sensor of the 4th Drawer (L)	Paper Take-Up Sensor of the 4th Drawer (T)