AD-231 Automatic Duplexer



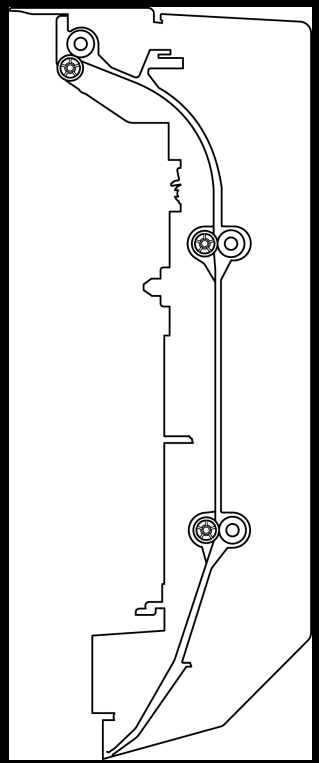

Detailed Specifications

Specifications

Type	Switchback and Circulating Duplex Unit
Installation	Mounted on the right side door of copier
Type of Copy Paper	Plain paper
Paper Sizes	B5L to A3WideL or 7-1/4 × 10-1/2L to 12-1/4 × 18L
Paper Weight	64 to 90 g/m² (17 to 24 lbs.)
Registration	Center
Power Source	DC24V ± 10% (supplied from copier)
Power Consumption	17 W or less
Dimensions	Width: 139 mm (5-1/2 in.) Depth: 440 mm (17-1/4 in.) Height: 365 mm (14-1/4 in.)
Weight	3.1 kg (6-3/4 lbs.)
Environmental Requirements	Same as copier

Component Identification

Drive System

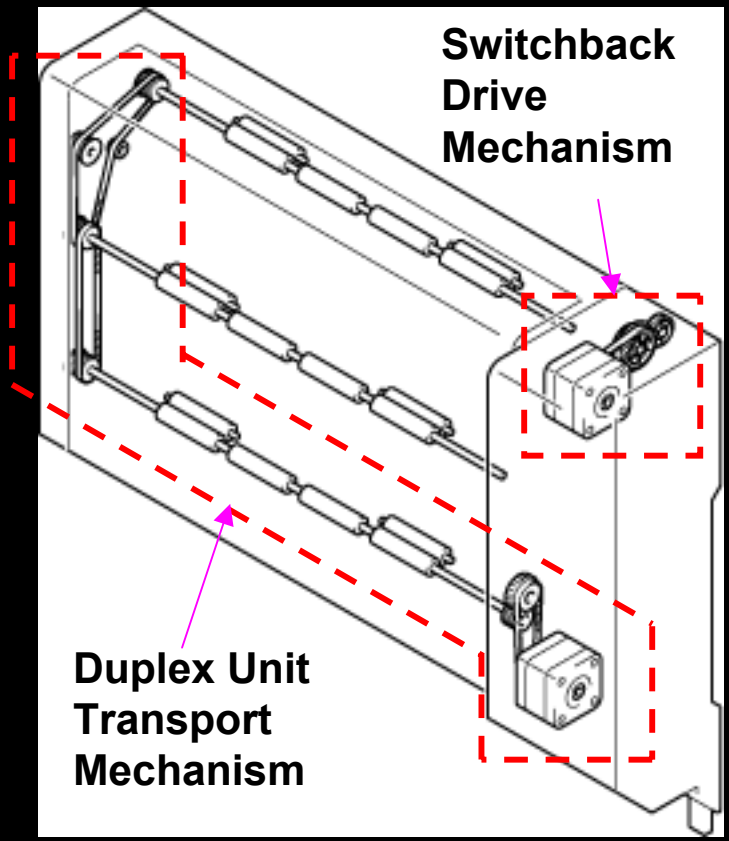

Electrical Components Layout

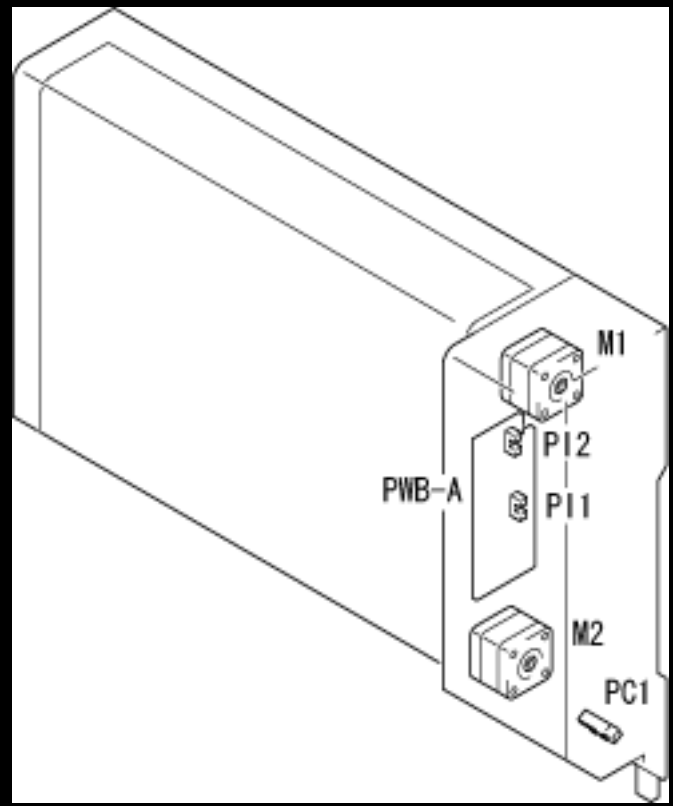

Switchback Mechanism

Switchback Operation

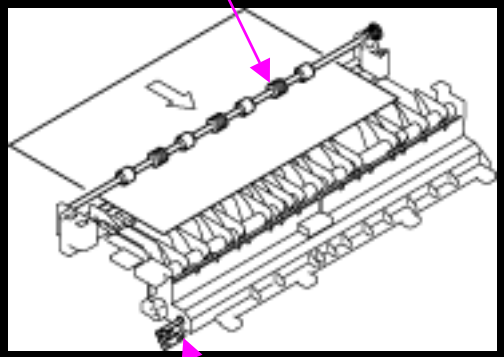

Paper Exit Roller Drive Coupling Mechanism

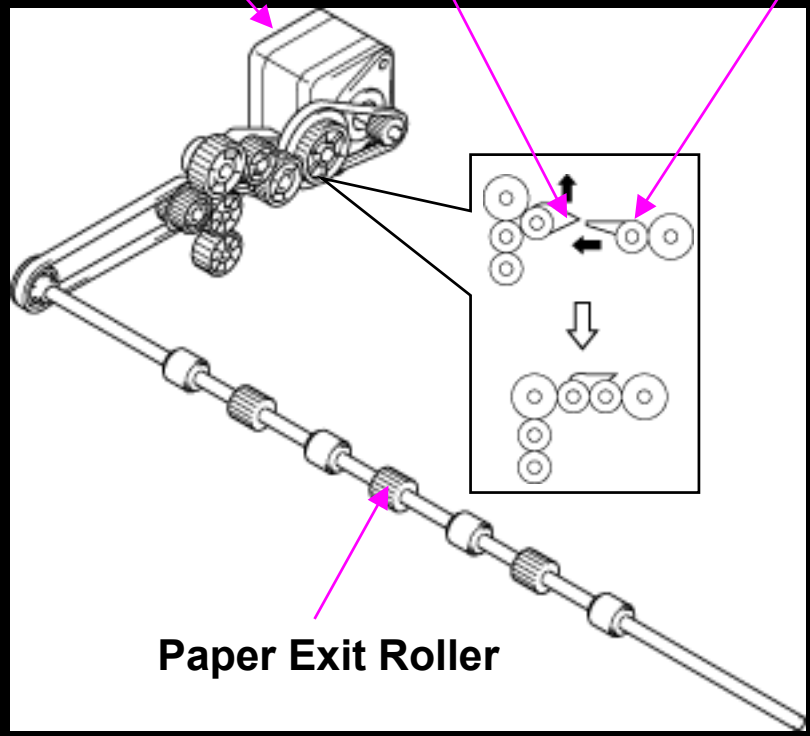

Transport/Paper Duplex Take-up

Transport and Duplex Paper Take-up Operation

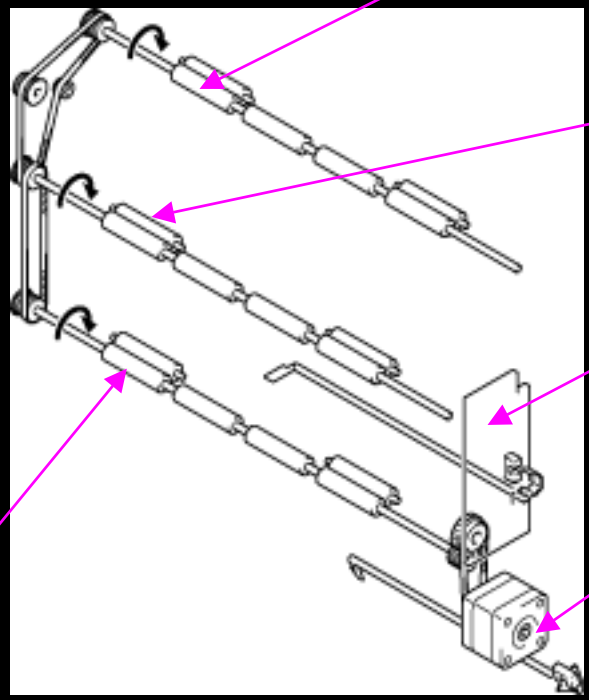

2-Sided Copying Operations

Operations in 2-sided copying with a single sheet of paper resident in the system
(FD length 215.9 mm or more)

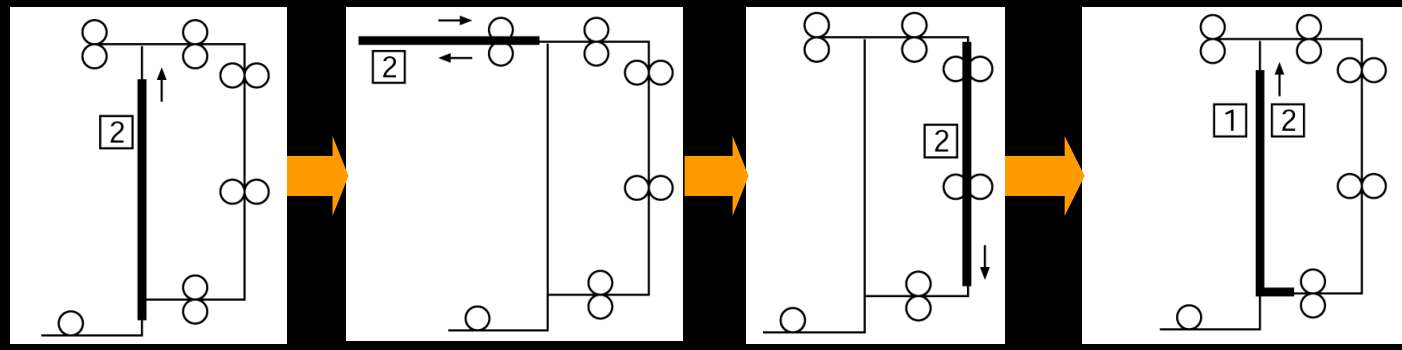

Operations in 2-sided copying with two sheets of paper resident in the system
(FD length 215.9 mm or less)

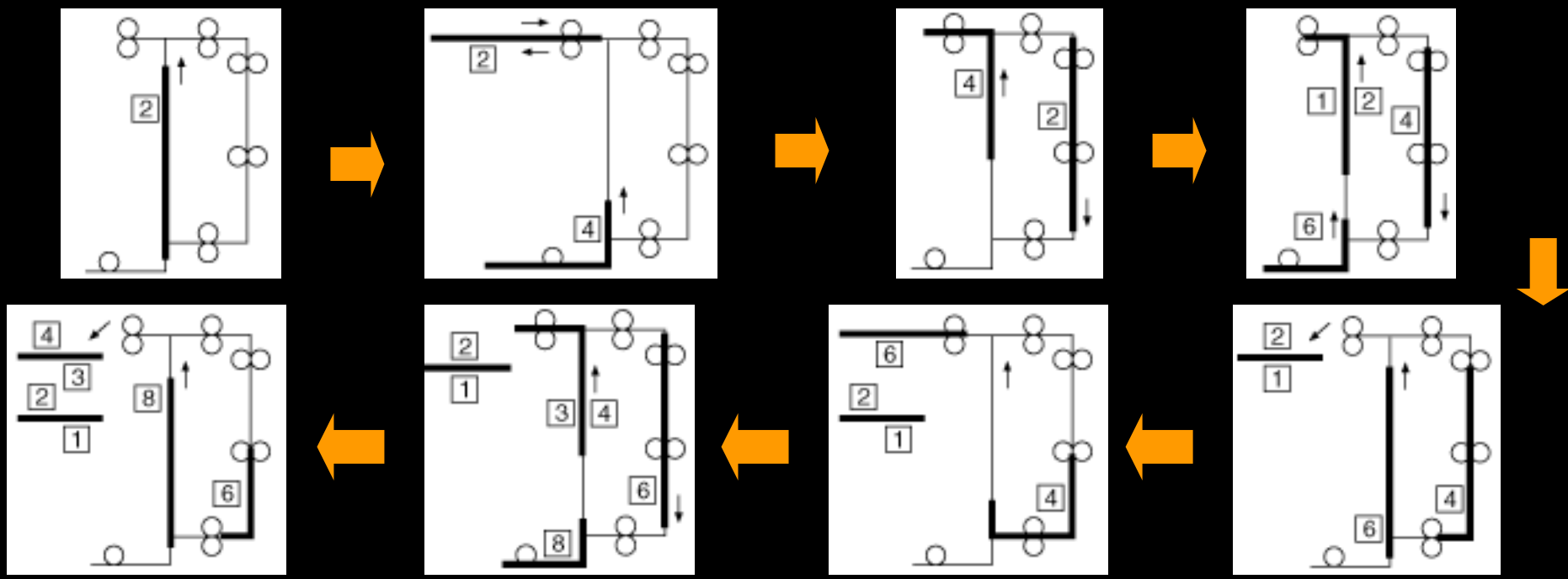

Operating Sequence

