FS-135 Finisher



Specifications

Type	Single Staple Finisher
Installation	Freestanding
Modes	Non-Sort Sort, Group Sort Staple, Group Staple
Alignment	Center
Power Source	DC24V ± 10% (supplied from copier)
Power Consumption	63 W
Dimensions	Width: 538 mm (21 in.) Depth: 637 mm (24-3/4 in.) Height: 978 mm (38-1/2 in.)
Weight	Finisher: 32.9kg (72-1/2 lbs.) Horizontal Transport Unit: 2.6kg (5-3/4 lbs.) Total: 35.5kg (78-1/4 lbs.)
Supplies	Staple Cartridge

Detailed Specifications

Cross-Sectional View

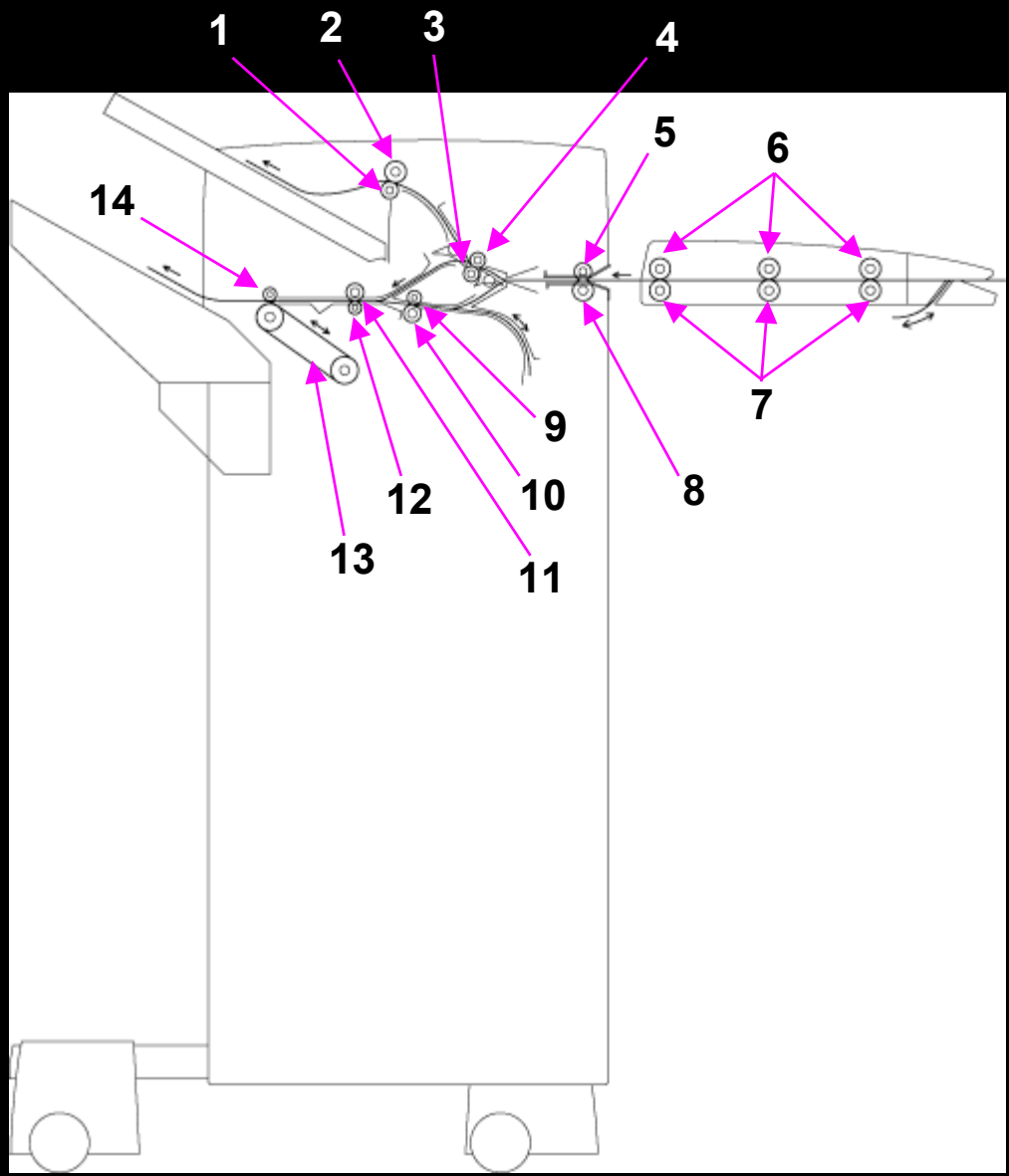

Drive System (1)

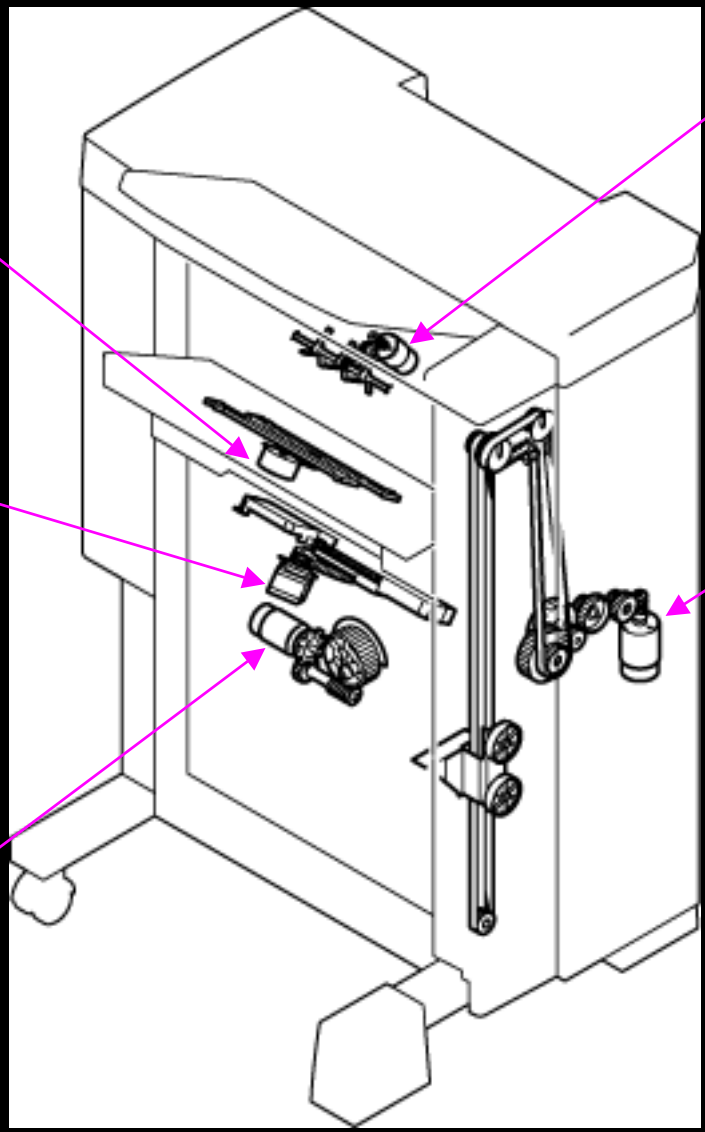

Drive System (2)

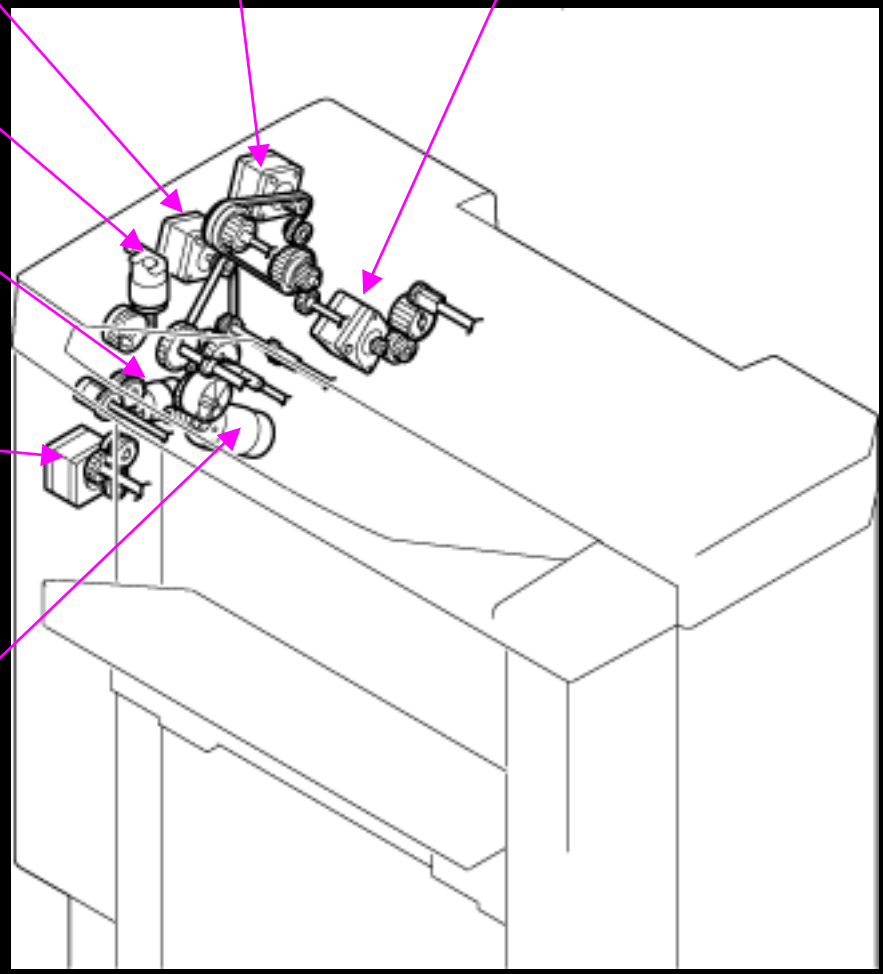

Component Identification (1)

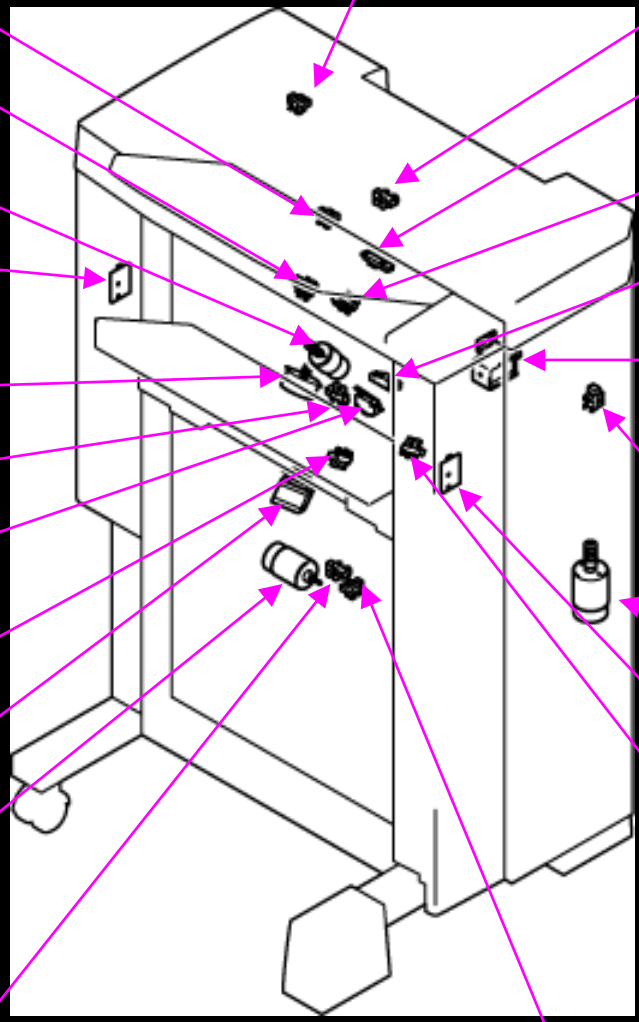

1st Tray Full Detecting Sensor

Upper Cover Detection Sensor

1st Tray Exit Sensor

Upper Entrance Sensor

Lower Entrance Sensor

Lower Paddle Motor

Storage Sensor

Elevator Tray Upper Limit Sensor PQ

Finisher Tray Paper detecting Sensor

CD Aligning Motor

1st Tray Entrance selecting Solenoid

Elevator Tray Paper Detection Sensor

Front Door Detection Sensor

Elevator Tray Upper Limit Switch

Elevator Motor

Staple Unit Moving Sensor

Elevator Tray Upper Limit Sensor LED

Staple Home Position Sensor

CD Aligning Home Position Sensor

Shift Motor

Shift Motor Pulse Sensor

Shift Home Position Sensor

Component Identification (2)

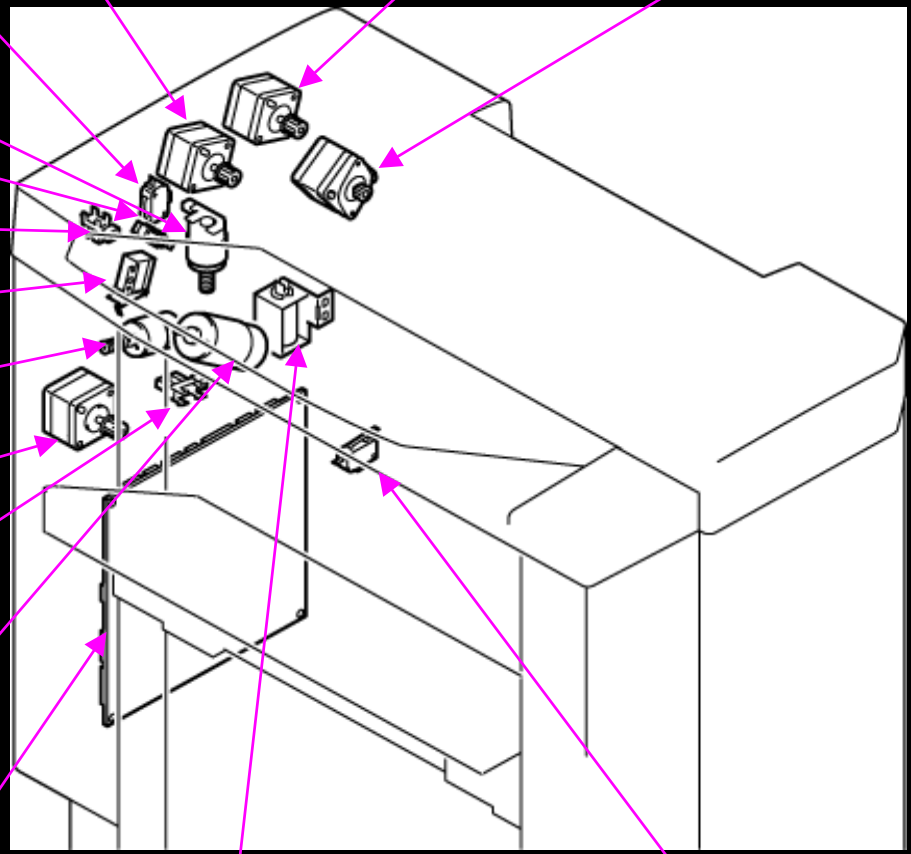

Paper Path

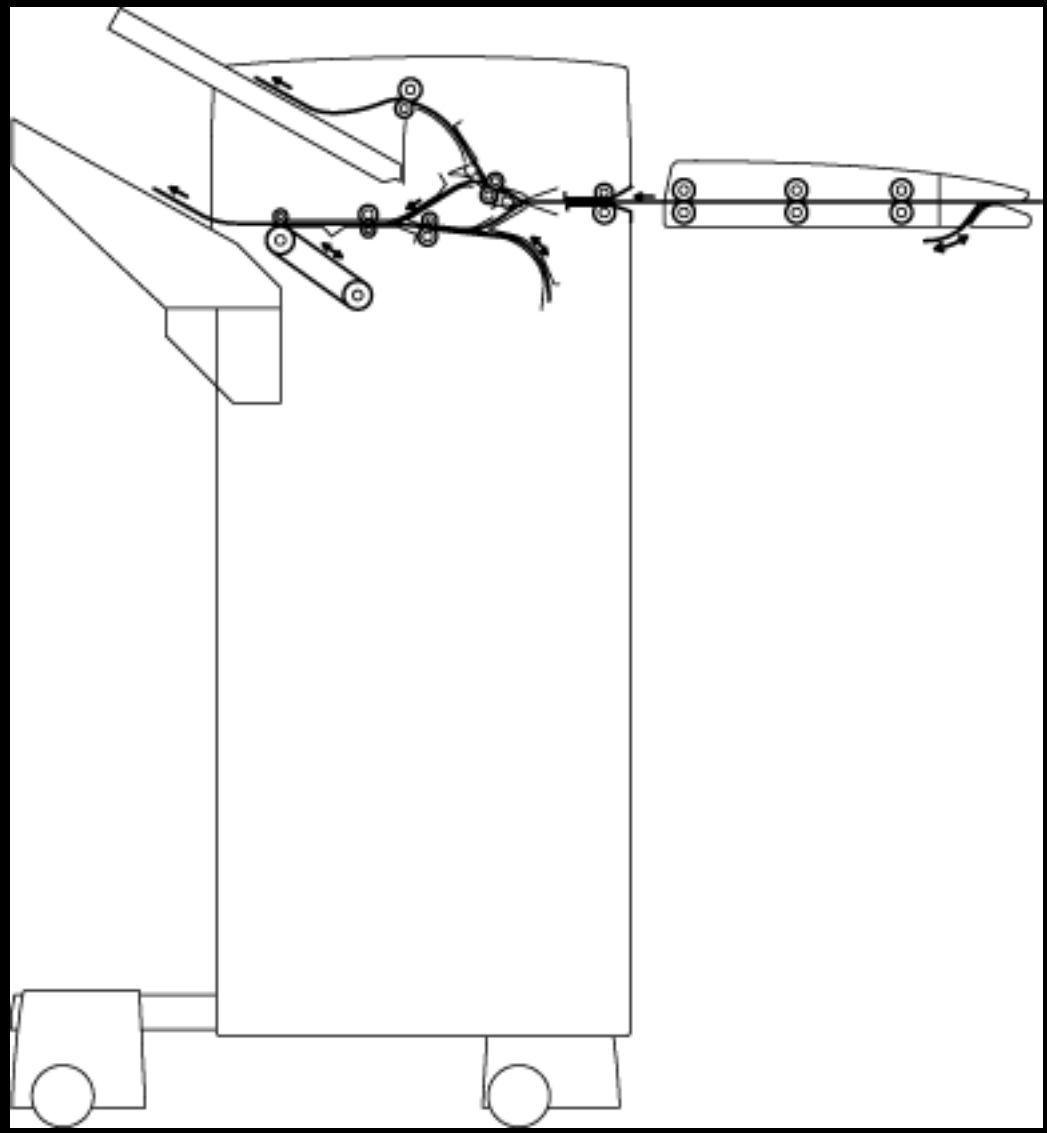

Horizontal Transport Section (1)

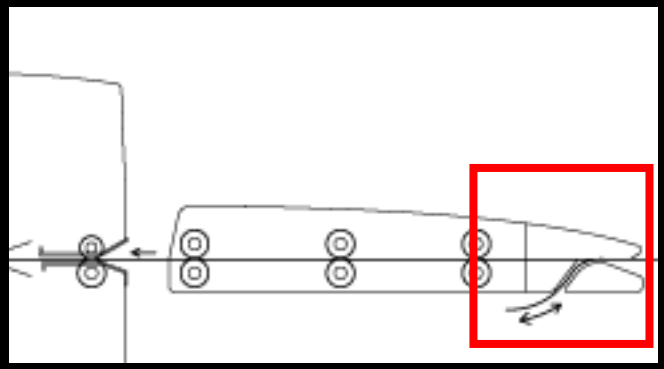

Entrance Switching Solenoid

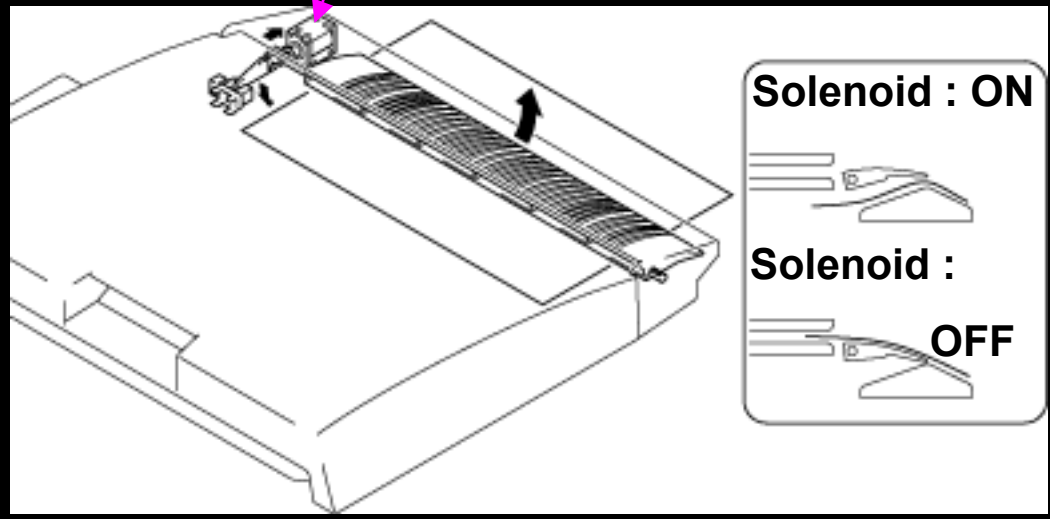

Horizontal Transport Section (2)

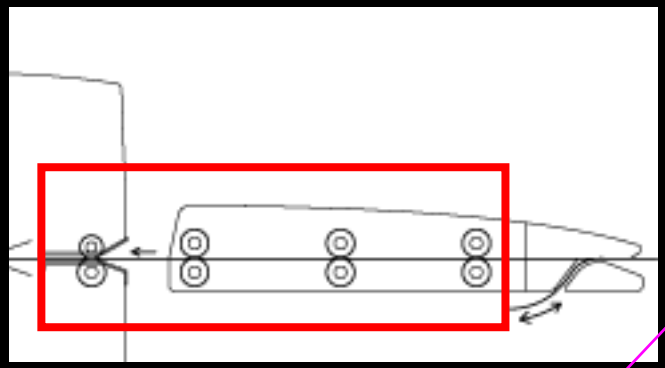

Entrance Motor

Horizontal Unit Side

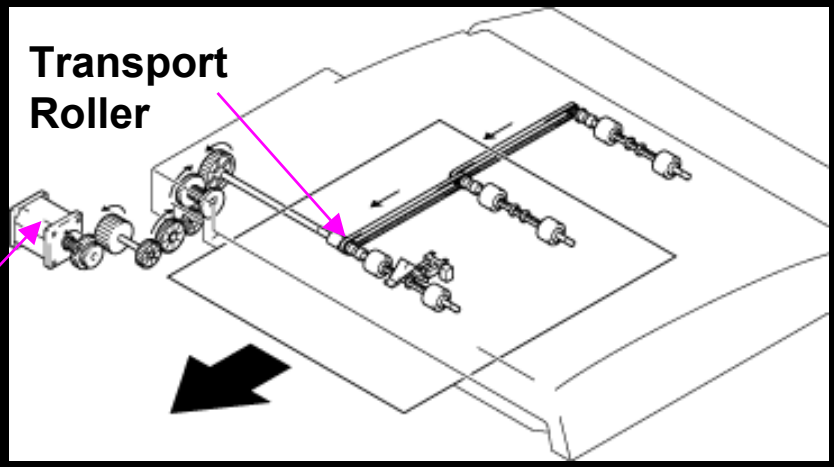

Finisher Side

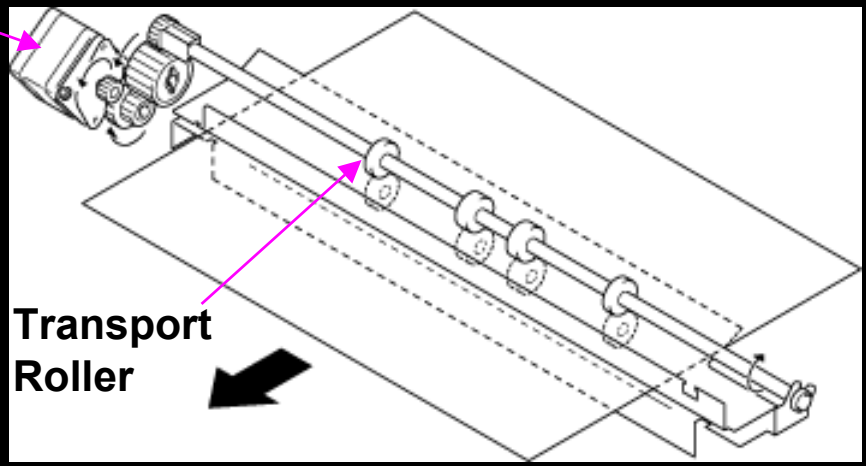

Paper Transport Mechanism (1)

1st Tray Paper Transport Mechanism

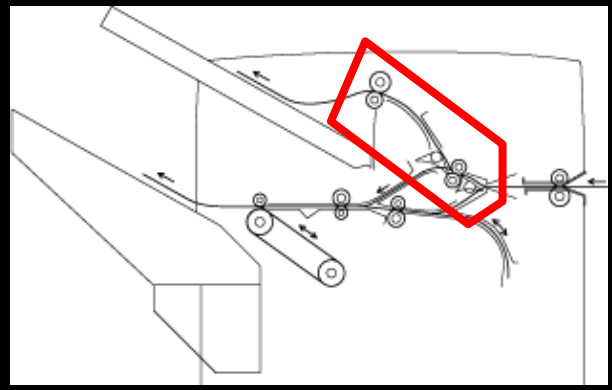

Upper Entrance Motor

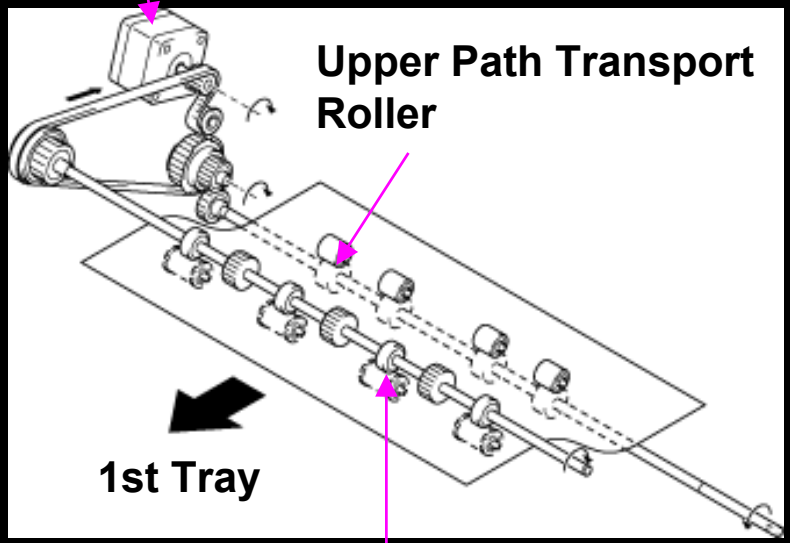

1st Tray Exit Roller

Upper/Lower Entrance Switching Solenoid

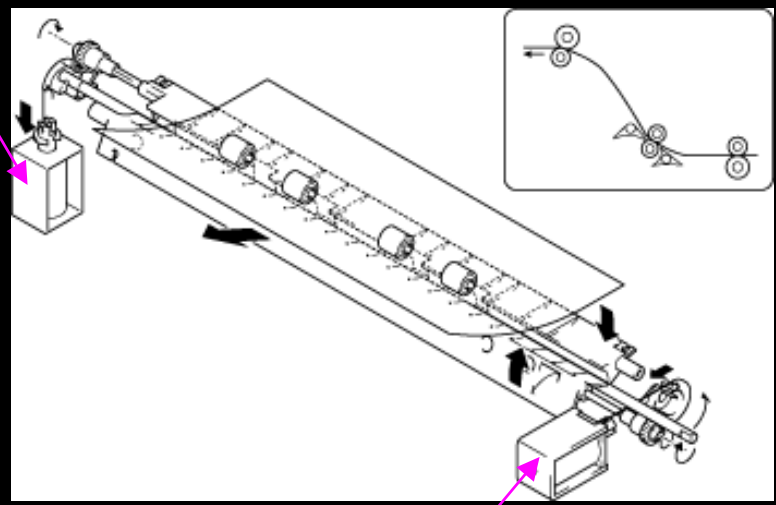

1st Entrance Switching Solenoid

Paper Transport Mechanism (2)

Finisher Tray Paper Transport Mechanism

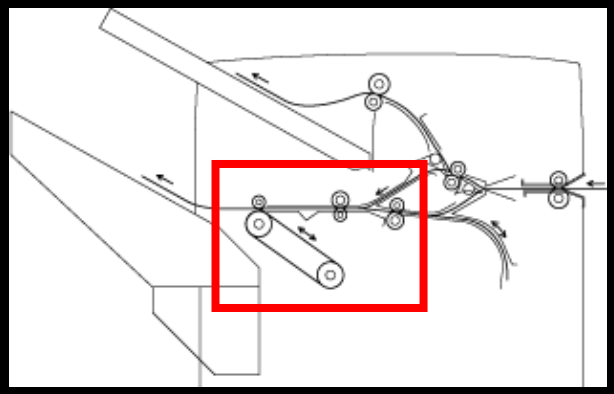

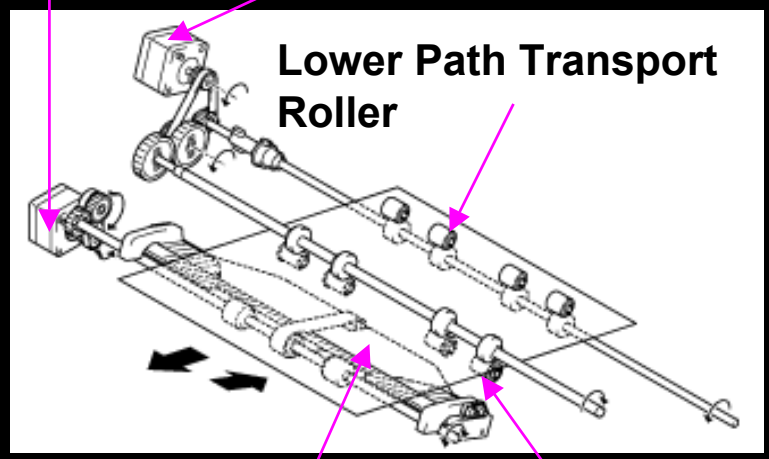

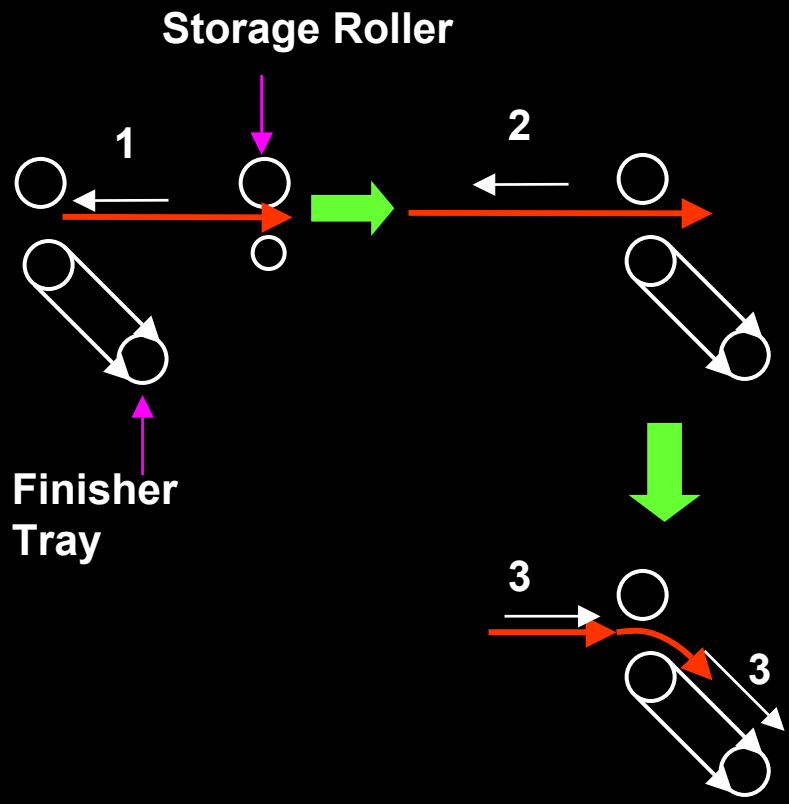

Paper Transport Mechanism (3)

Elevator Tray Paper Transport Mechanism

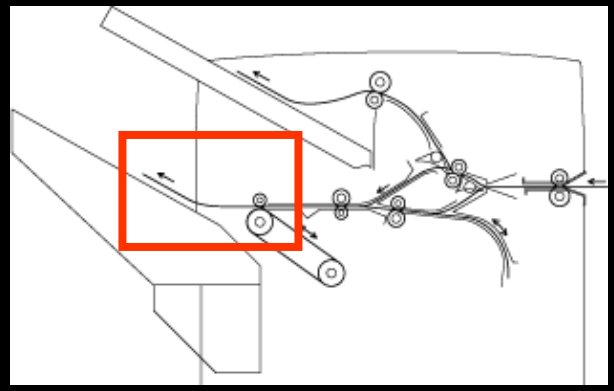

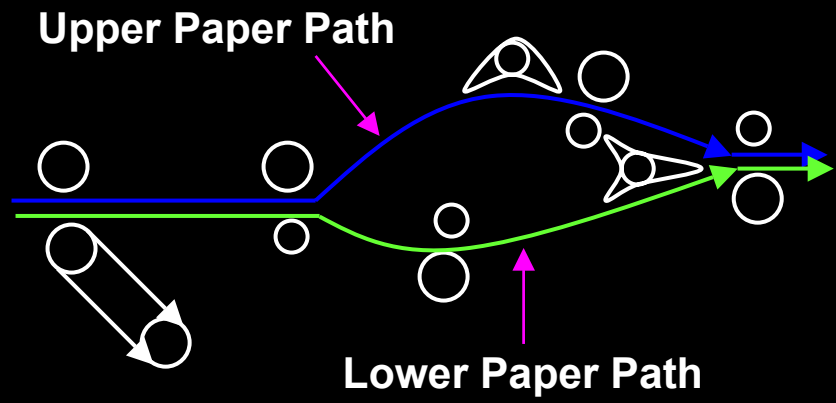

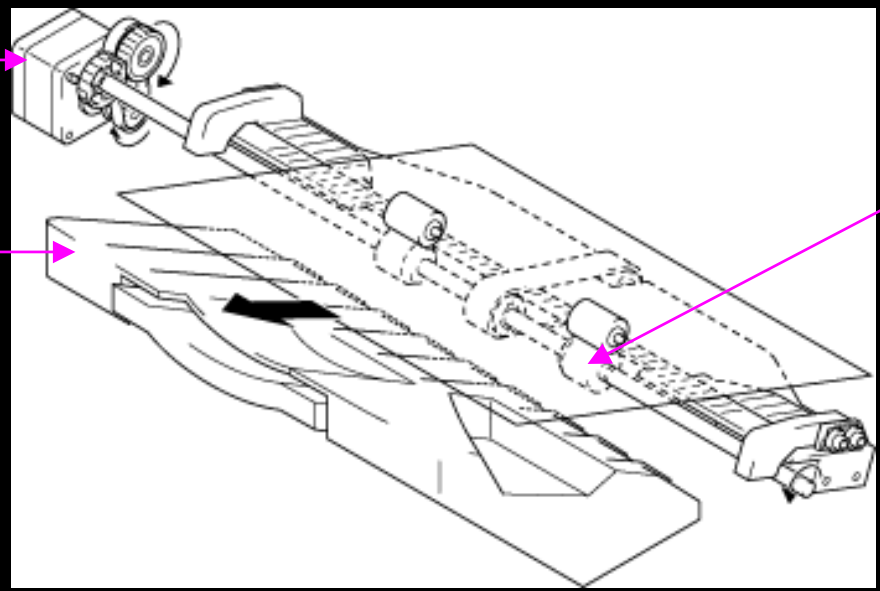

Paper Switchback Mechanism

Three A4C/LtrC originals for two copy sets

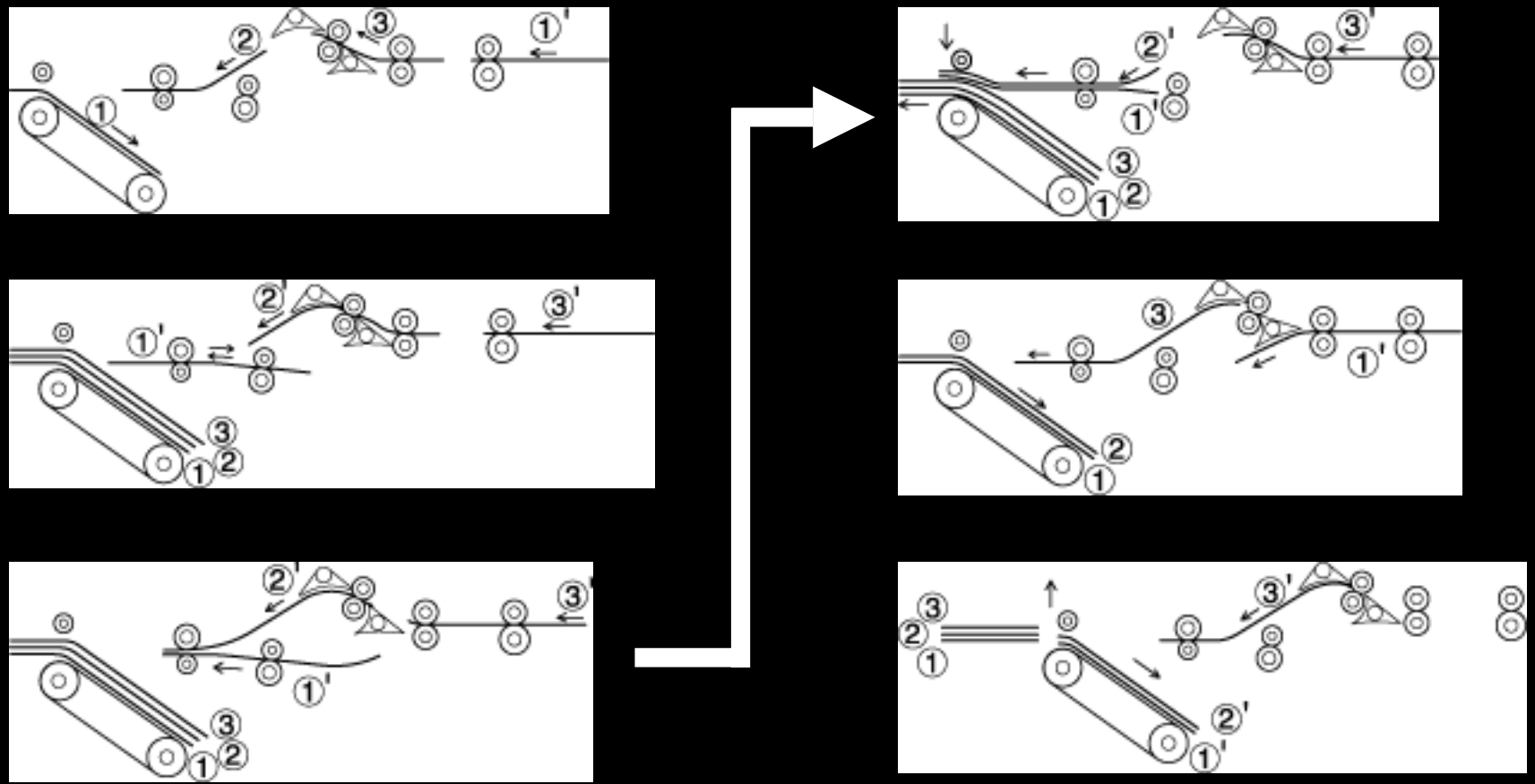

Rollers Spacing Mechanism

Exit Rollers Spacing Motor

Storage Rollers Spacing Motor

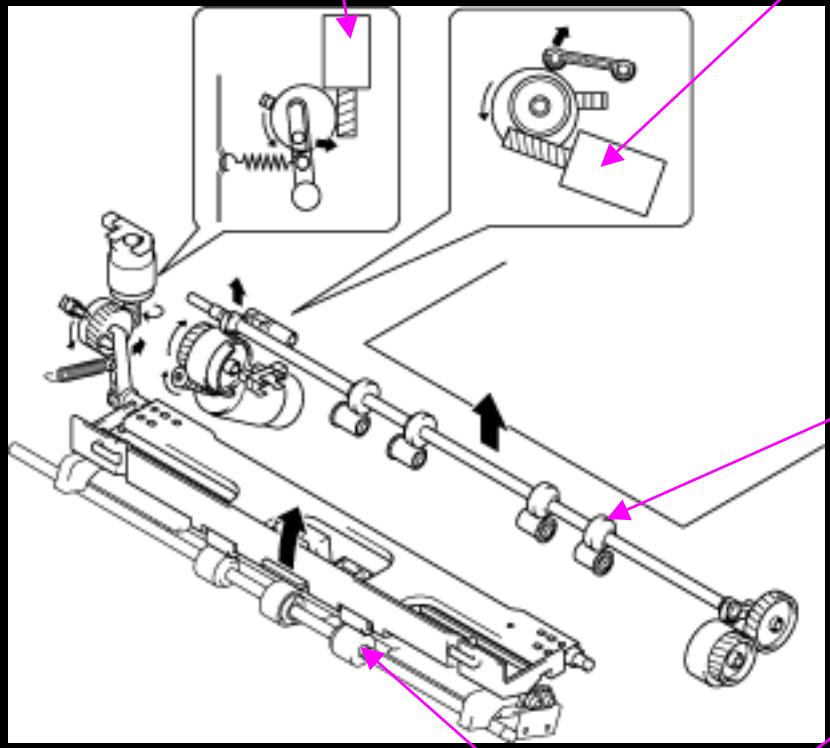

Storage Roller

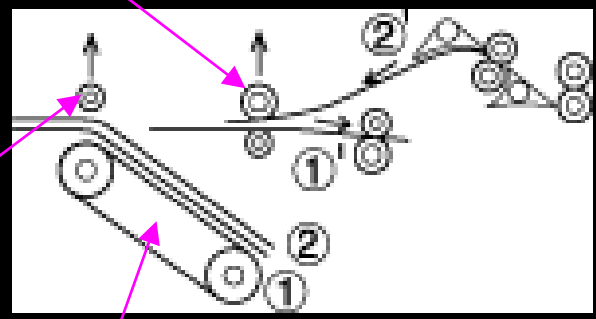

Exit Rollers

Finisher Tray

Finisher Tray

Aligning Paper in Feeding Direction

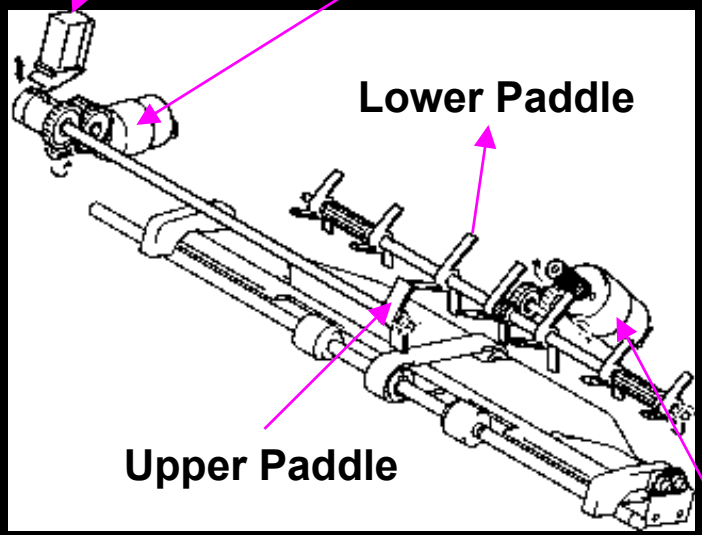

Aligning Paper in Crosswise Direction

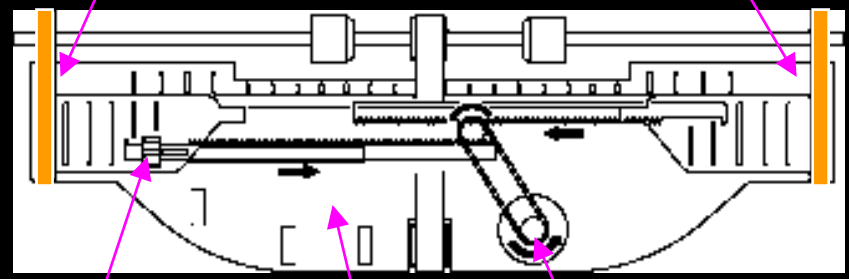

Stapling

Stapling Unit

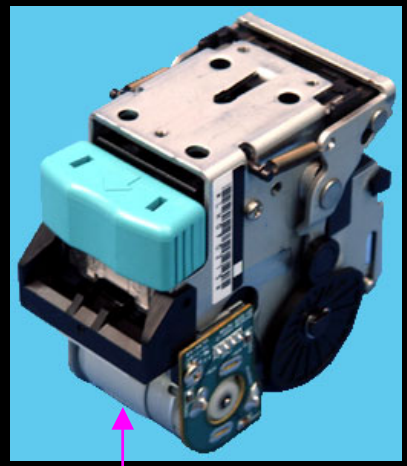

Stapling Motor

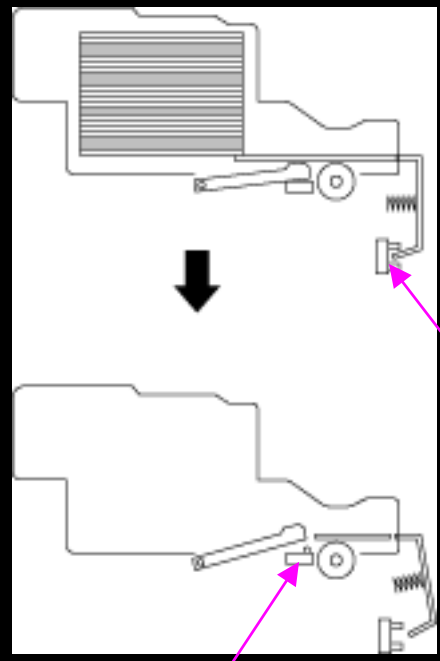

Self-Priming Sensor

Staple Empty Detecting Sensor

-When there are about 20 staples left in the Staple Cartridge, the Staple Empty Detecting Sensor detects a staple sheet empty condition.

-After a new Staple Cartridge has been loaded, the Stapling Motor is energized to feed the staple sheet until the Self-Priming Sensor detects a staple.

Paper Aligning Mechanism

Stapling Position : Rear corner

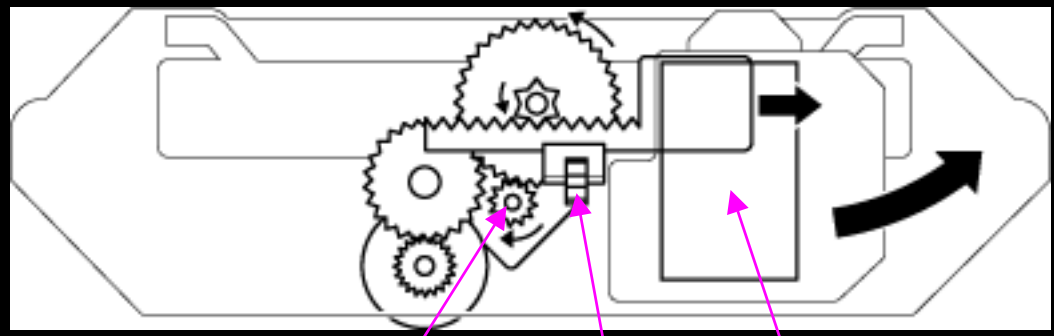

Stapling Unit 1

Staple Home Position Sensor

Stapling Unit Moving Motor

Elevator Tray

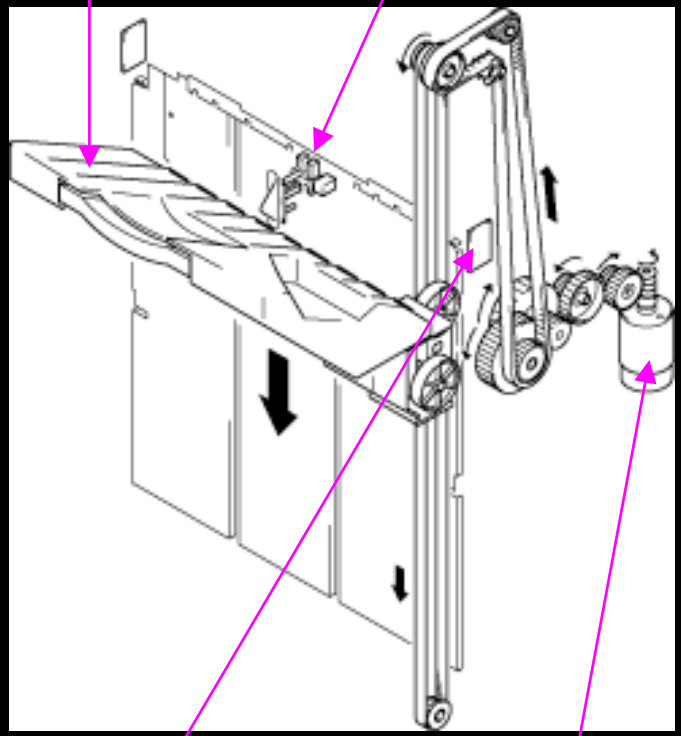

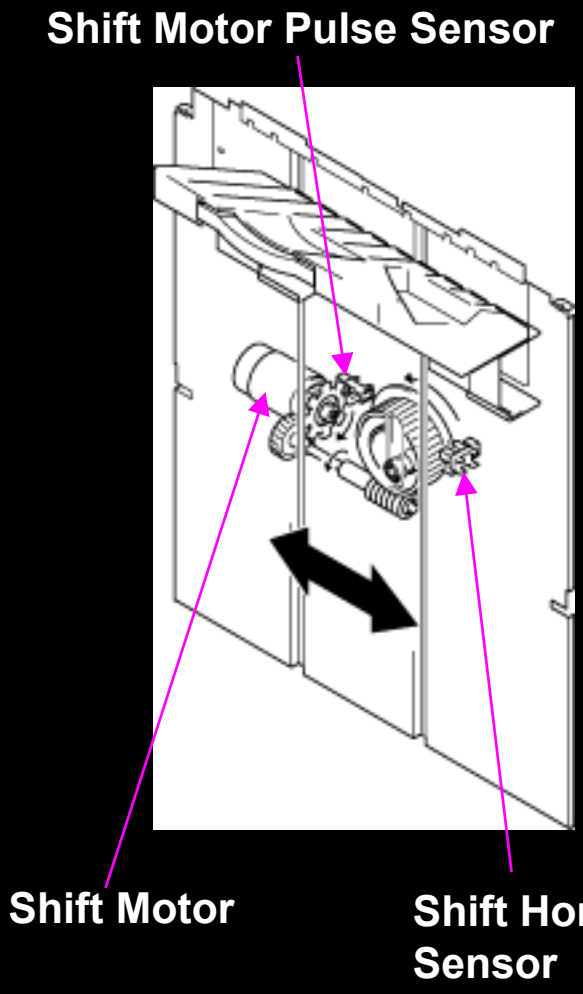

Operating Sequence

Operating Sequence



FT-331 (Optional 3rd Tray for FS-135)

Specifications

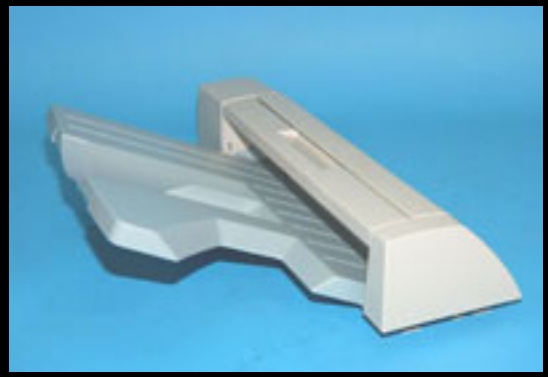

Paper Size	Inch area: 5-1/2 × 8-1/2L, 8-1/2 × 11/L/C, 7-1/4 × 10-1/2L/C, 8-1/2 × 14L, 11 × 17L Metric area: A4L/C, A3L
Paper Type	Plain paper
Paper Weight	64 to 90 g/m^2 (17 to 24 lbs.)
Capacity	100 sheets (A4C or LetterC) 50 sheets (except A4C or LetterC)
Dimensions	Width: 341 mm (13-1/2 in.) Depth: 527 mm (20-3/4 in.) Height: 149 mm (5-3/4 in.)
Weight	1.75 kg (3-3/4 lbs.)
Environmental Requirements	Same as copier

Detailed Specifications

Paper Transport Mechanism

3rd Tray Paper Transport Mechanism

