FS-231 Multi-Position Stapling and Booklet Finisher



Detailed Specifications

Specifications

Type	Multi Staple Finisher with a saddle
Installation	Freestanding
Modes	Non-sort Sort Staple Center Staple Booklet
Alignment	Center
Power Source	DC24V ± 10% (supplied from copier)
Power Consumption	63 W or less
Dimensions	Width: 601 mm (23-3/4 in.) Depth: 603 mm (23-3/4in.) Height: 933 mm (36-3/4in.)
Weight	Finisher: 39 kg (85-3/4 lbs.) Horizontal Transport Unit: 2.6 Kg (5-3/4 lbs.) Total: 41.6 kg (91-1/2 lbs.)
Supplies	Staple Cartridge (5,000 staples)

Component Identification

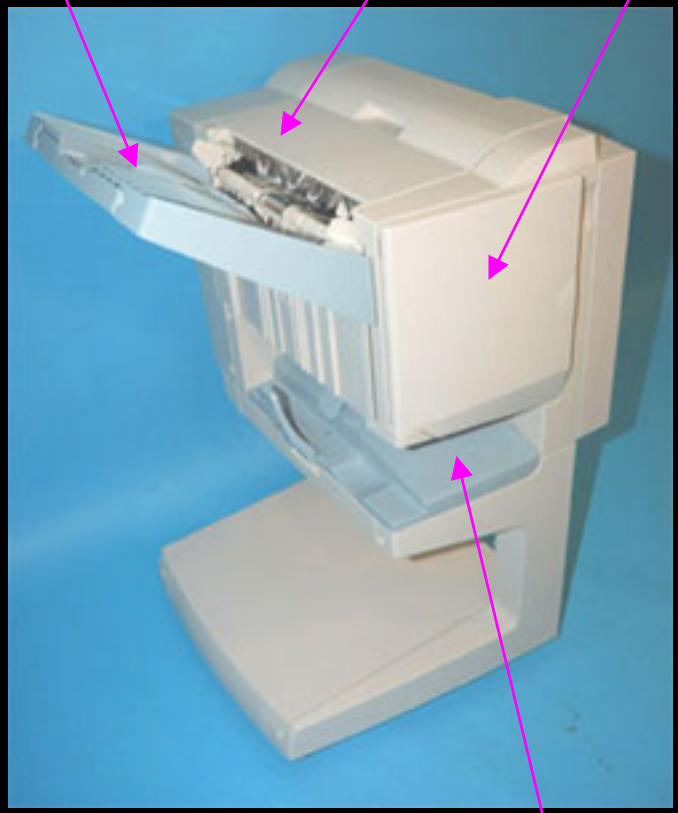

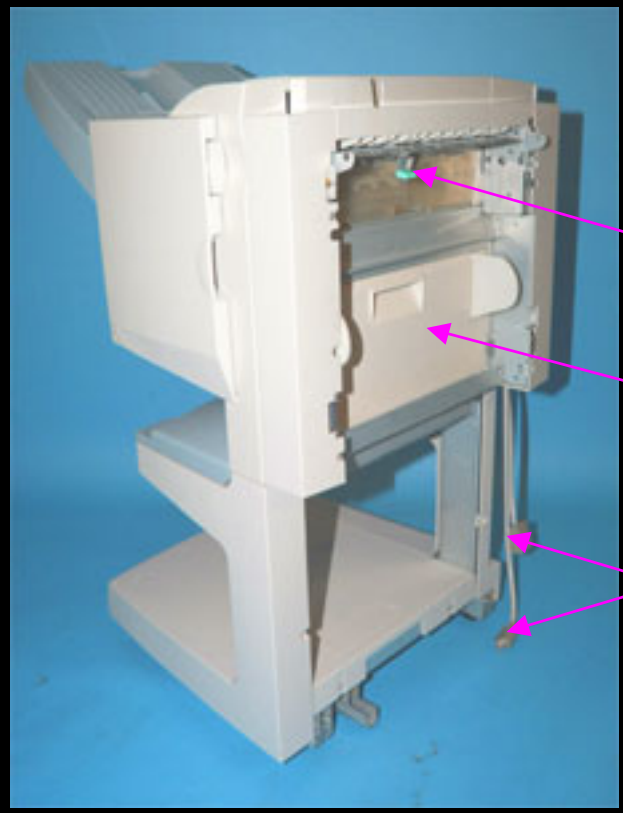

Drive System Component Identification

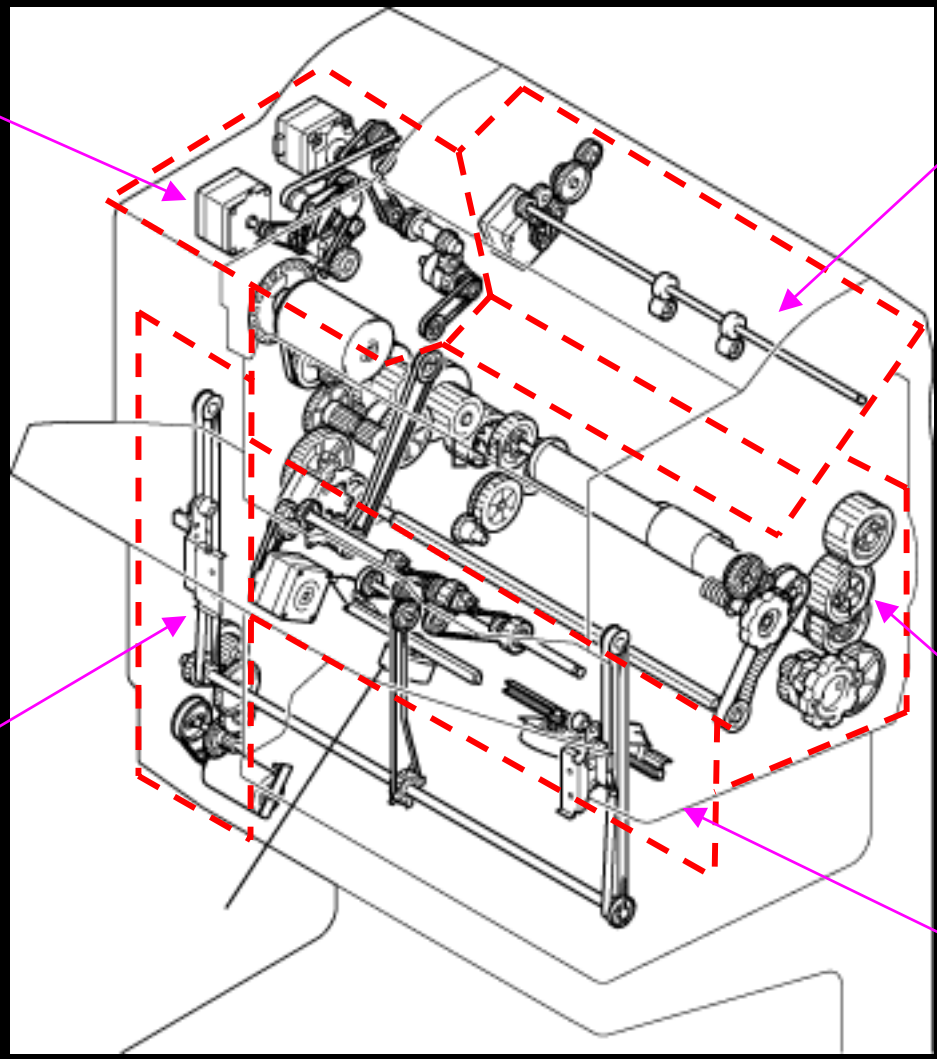

Electrical Components Layout

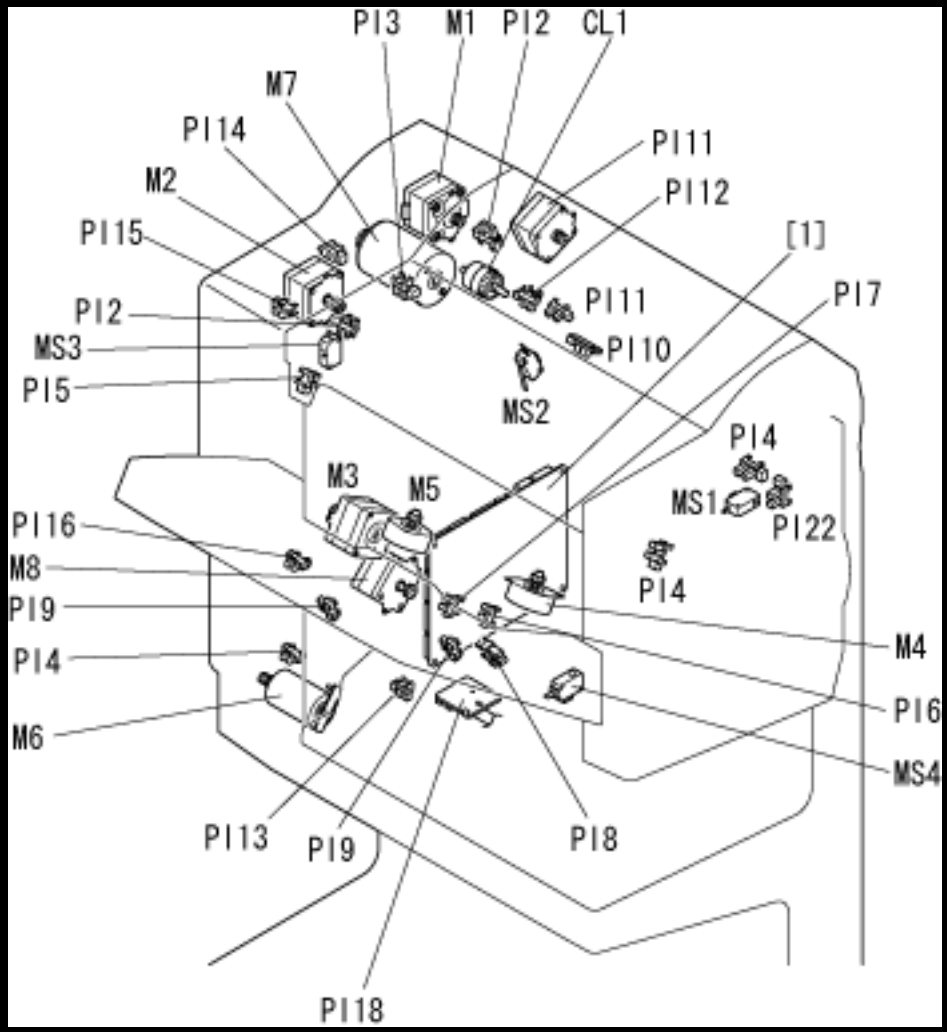

Components List

Paper Path

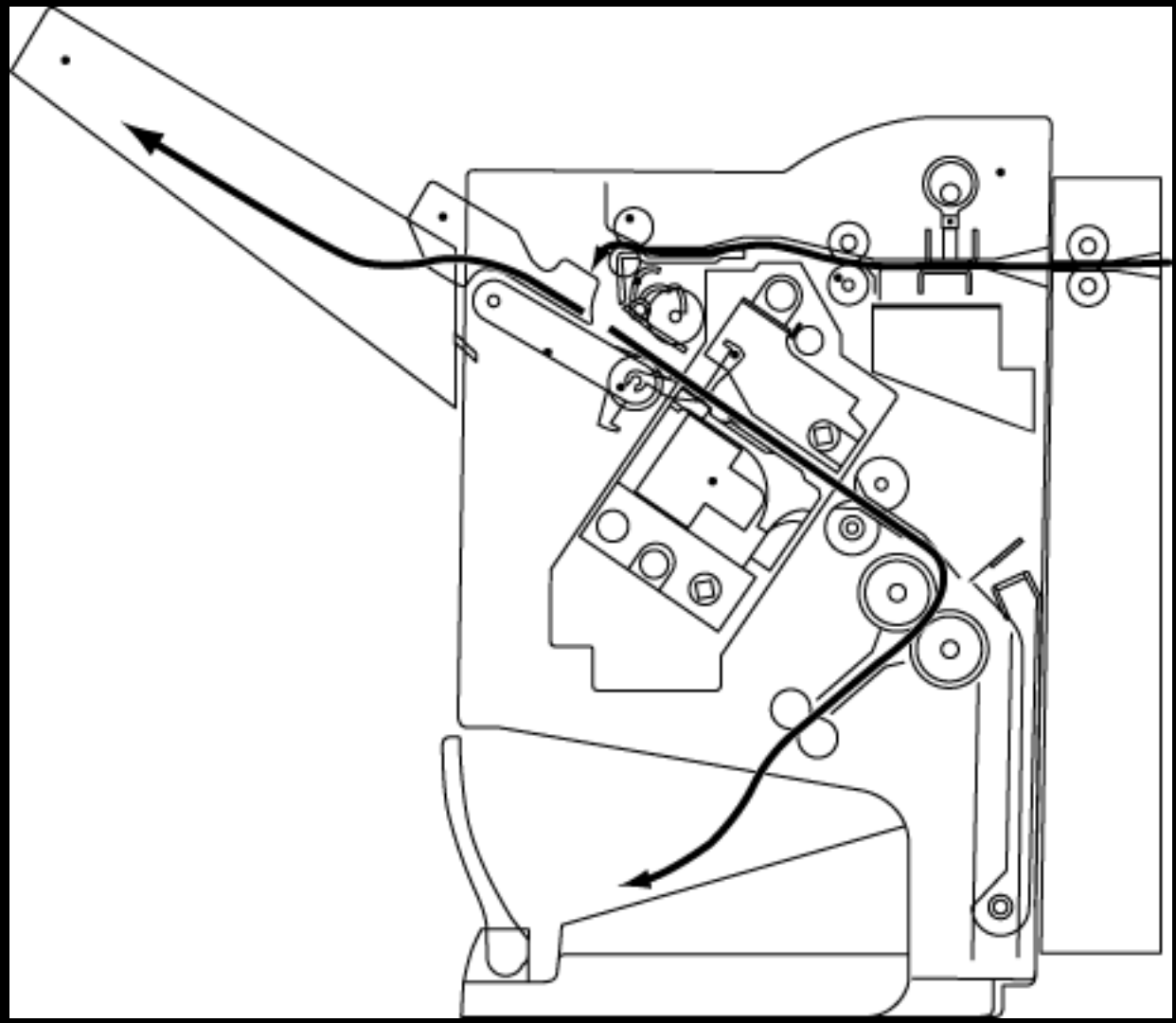

Horizontal Transport Mechanism (1)

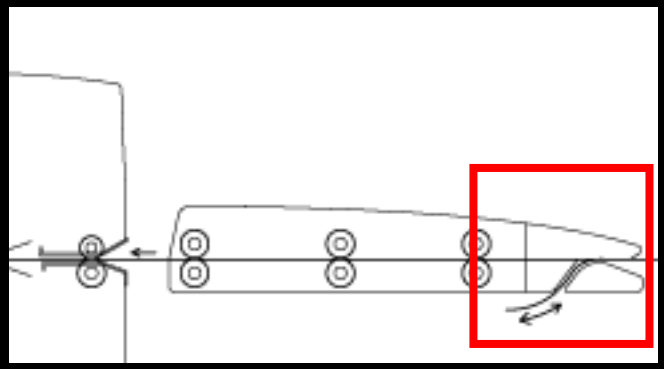

Entrance Switching Solenoid

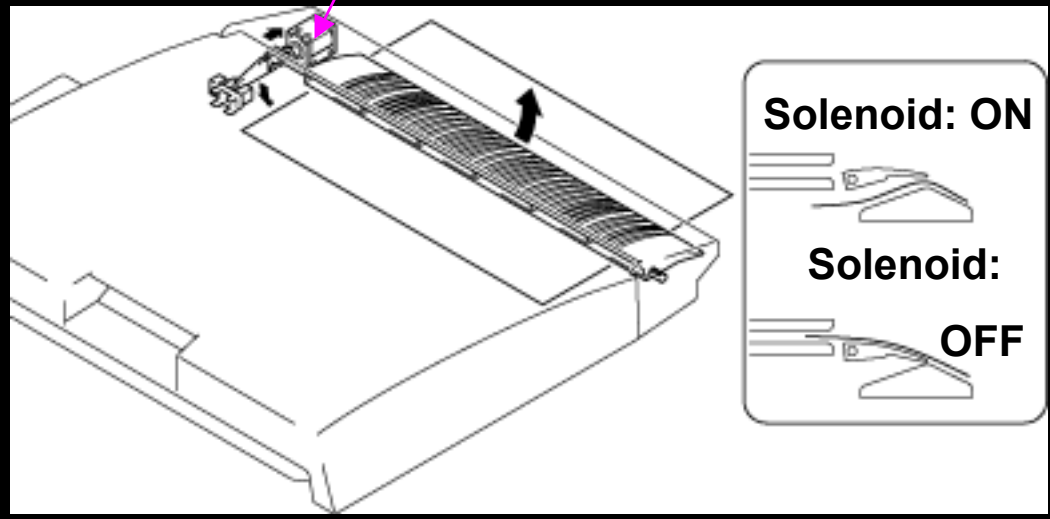

Horizontal Transport Mechanism (2)

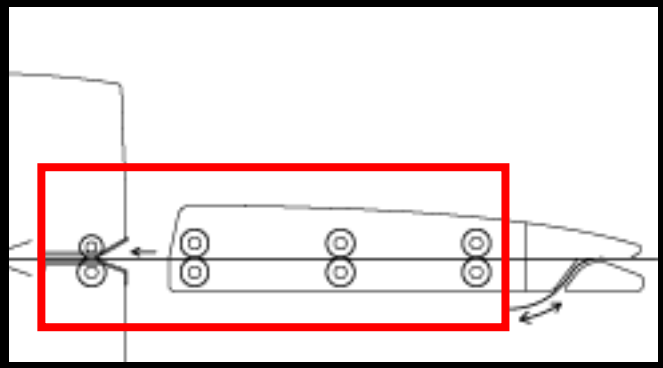

Horizontal Unit side

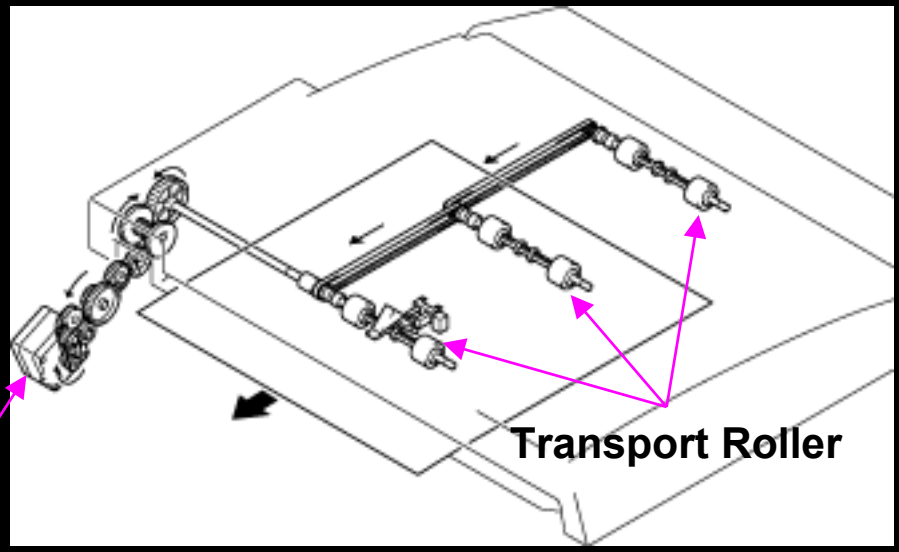

Entrance Motor

Finisher side

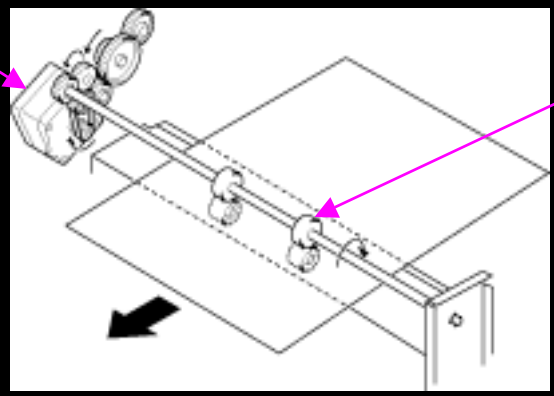

Transport Roller

Non-Sort Mode

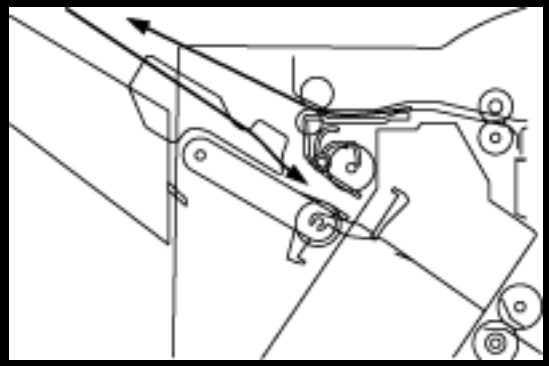

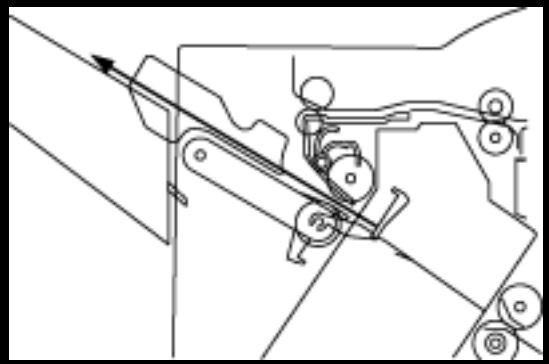

Paper Transport

Finishing Tray

Exit Tray

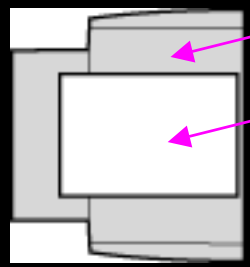

Sort Mode

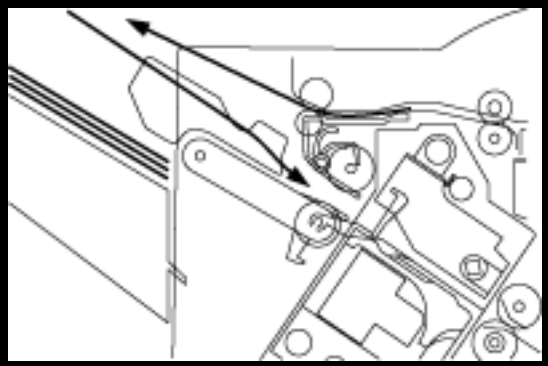

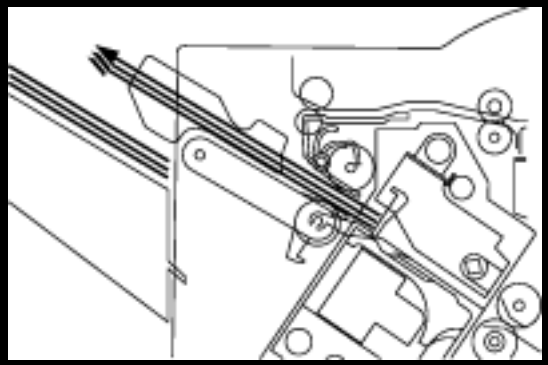

Paper Transport

Finishing Tray

⬇

Shifted with the Aligning Plate for each job

⬇

Exit Tray

Paper Stacking for 4 sets in Sort Mode



Staple Mode

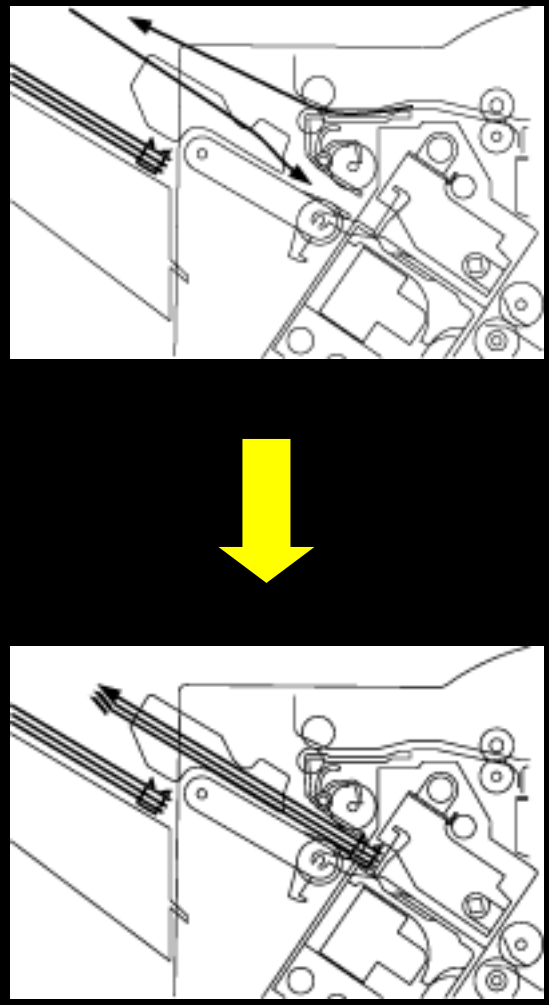

Paper Transport

Finishing Tray

⬇

Stapling for one set of copies

⬇

Exit Tray

Center Staple Booklet Mode

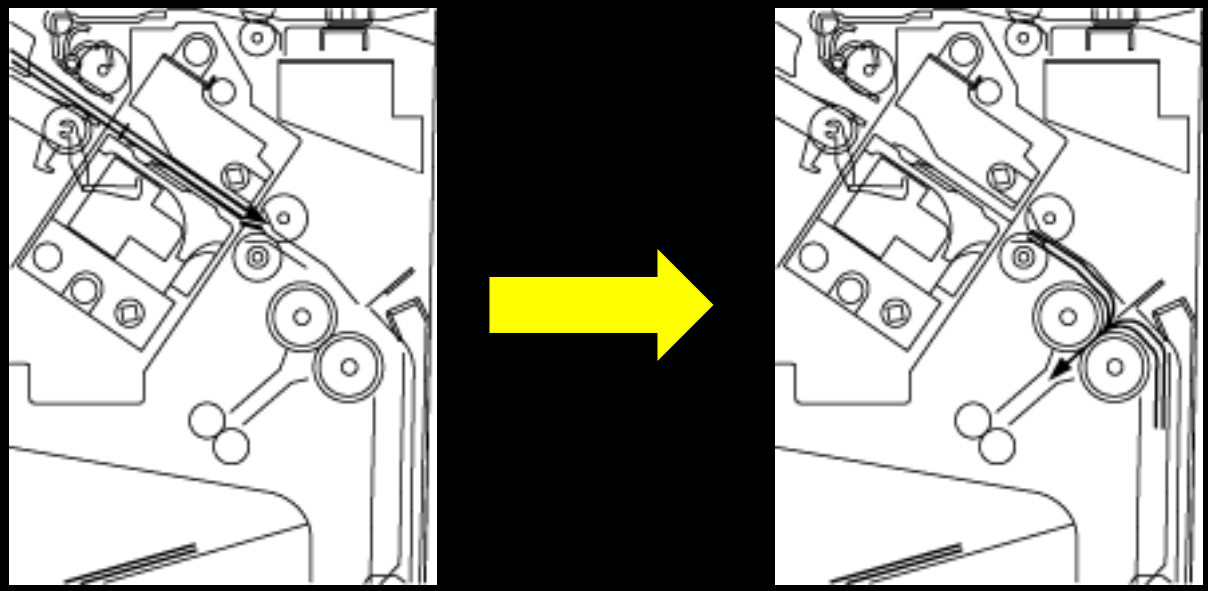

Paper Transport

Finishing Tray

⬇

2-Point center stapling

⬇

Saddle Section

⬇

Folding

⬇

Booklet Tray

Paper Stacking with Finishing Tray

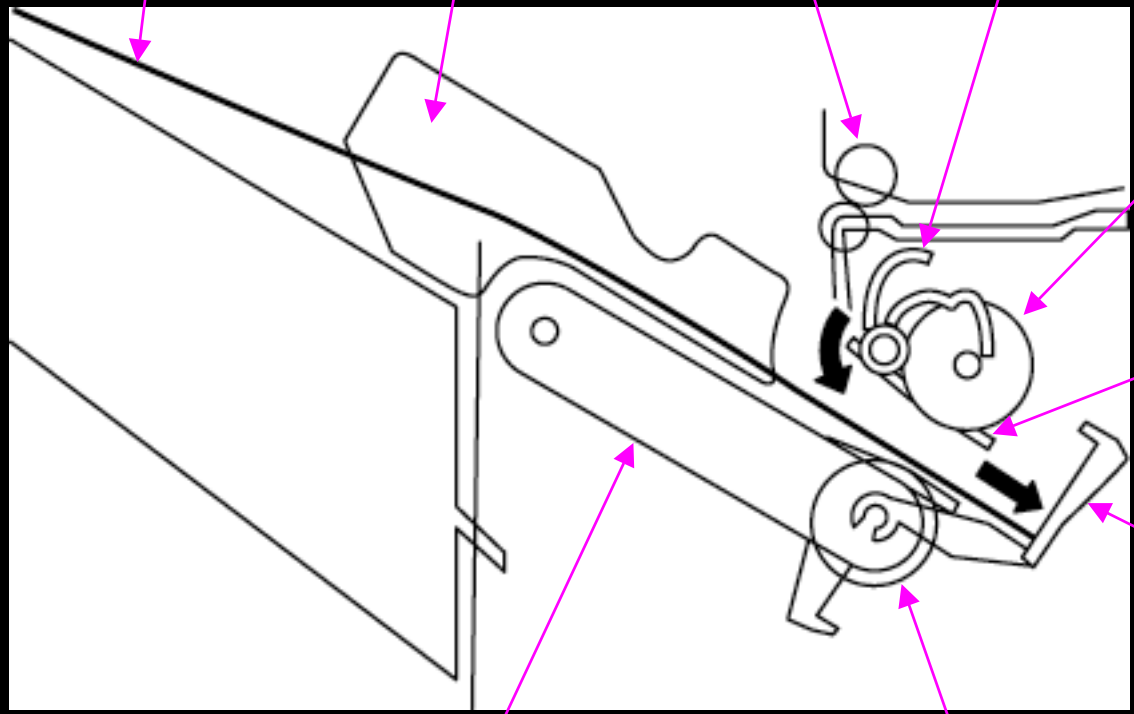

Aligning Mechanism

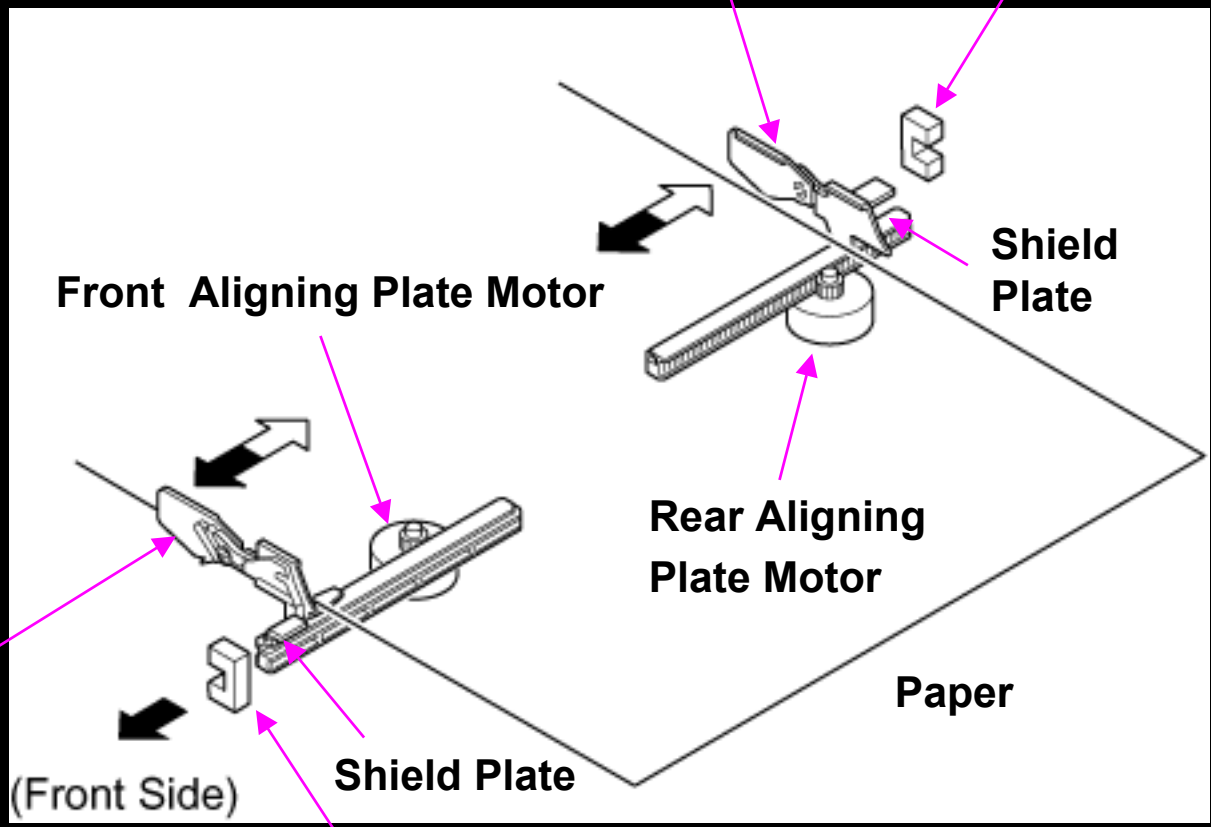

Offset Operation

Offset to Front Side

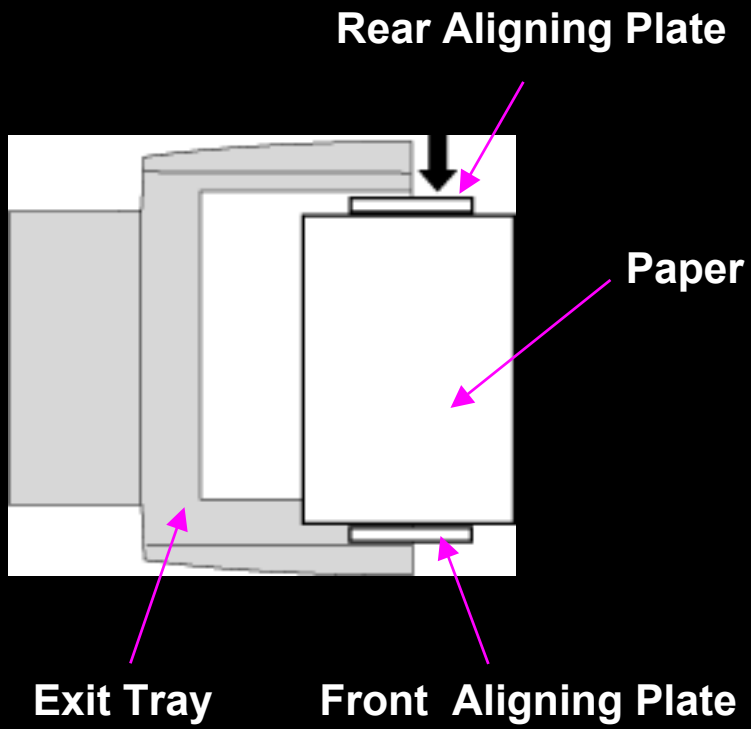

Offset to Rear Side

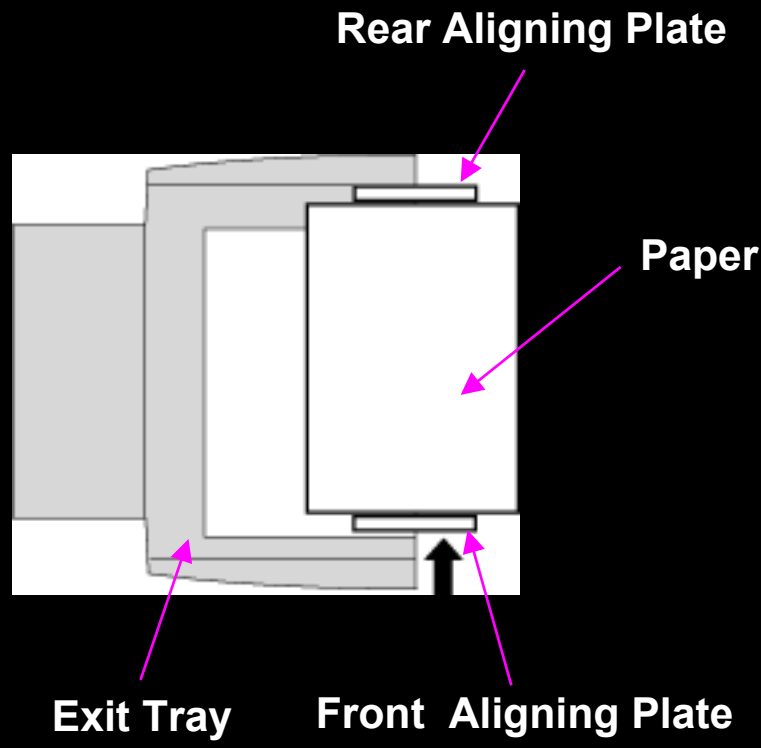

Exit Operation

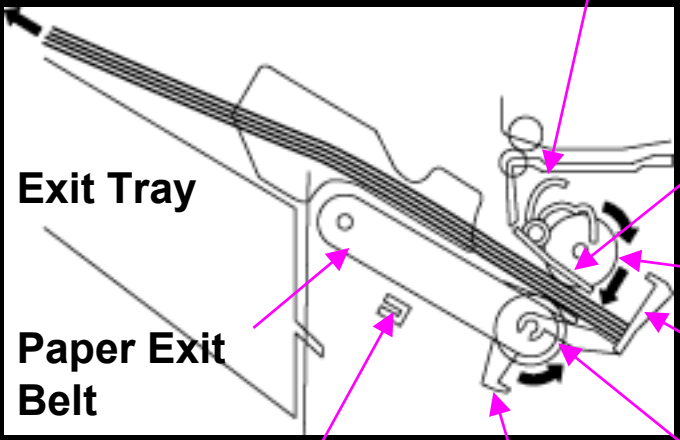

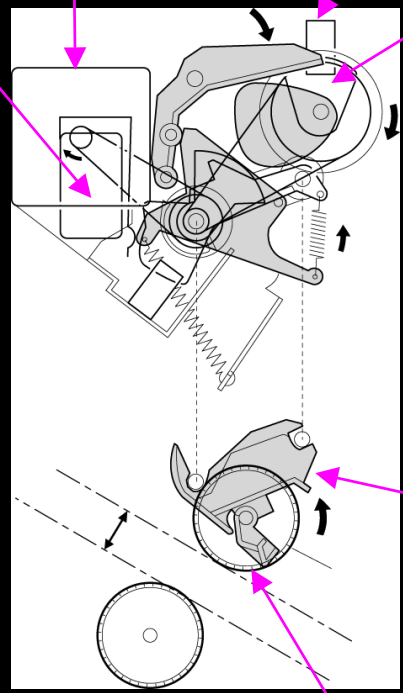

Paddle

Staple Safety SW

Paddle Motor

Swing Guide Home Position Sensor

Shield Plate

Swing Guide

Upper Exit Roller

Stopper

Swing Guide

Paper Exit Belt Home Position Sensor

Separator

Lower Exit Roller

Lower Exit Roller

Upper Exit Roller

Types and Positions of Staples

Type	Paper Size (Inch area)	Paper Size (Metric area)
Corner stapling (Rear)	8.5 × 11L/C, 8.5 × 14L, 11 × 17L	A4L/C, A3L
Corner stapling (Front)		
2-Point stapling		
2-Point center stapling	8.5 × 11L, 8.5 × 14L, 11 × 17L	A4L, A3L

Corner stapling (Rear)

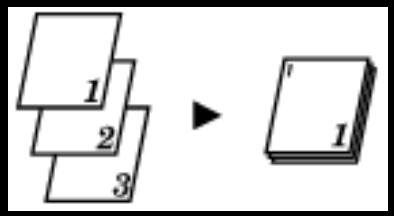

Corner stapling (Front)

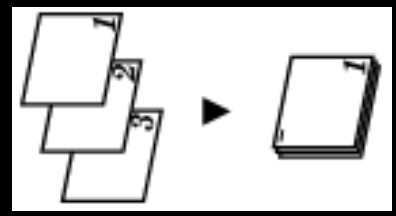

2-Point stapling

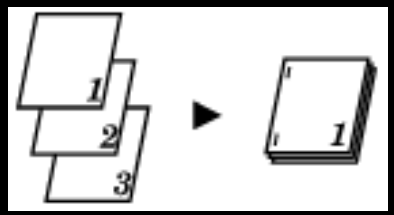

2-Point center stapling

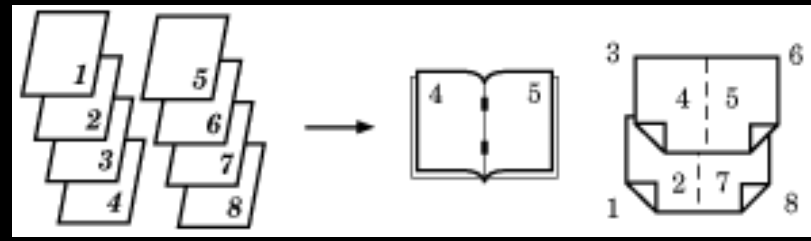

Stapling Unit Moving Mechanism

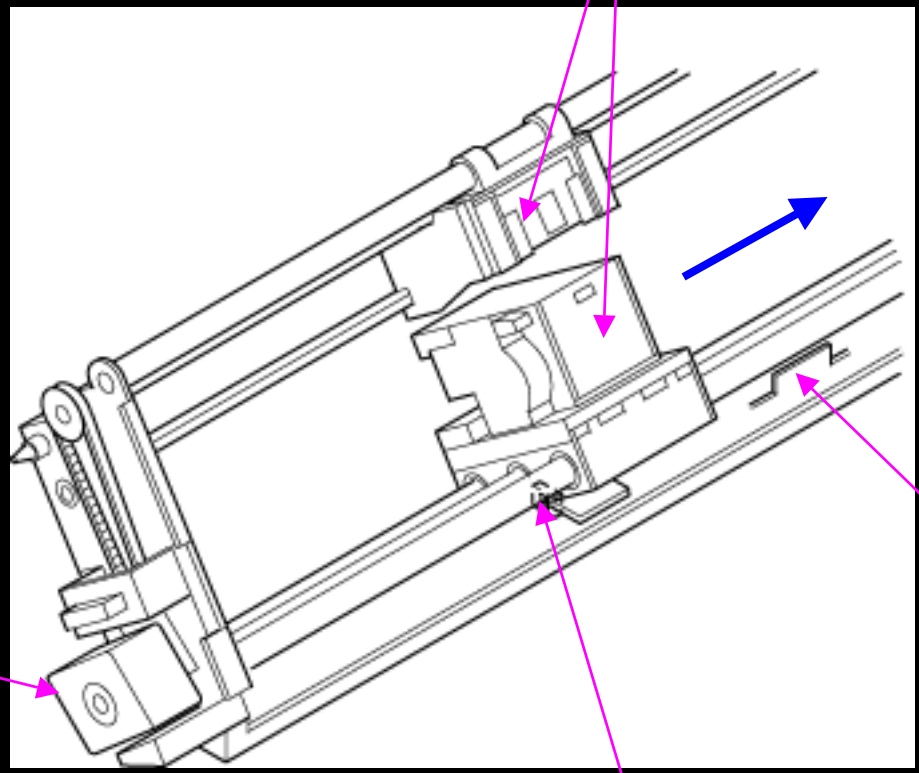

Staple Operation

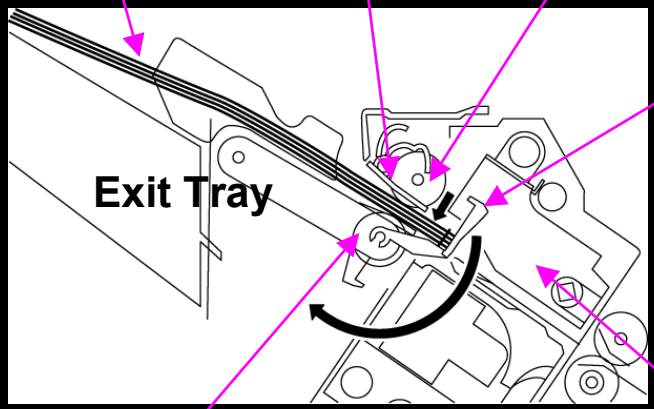

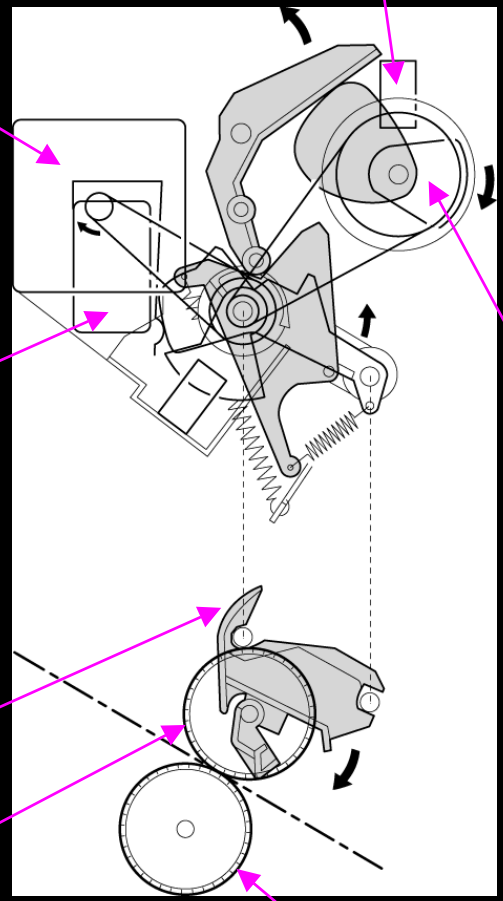

Stapling Unit

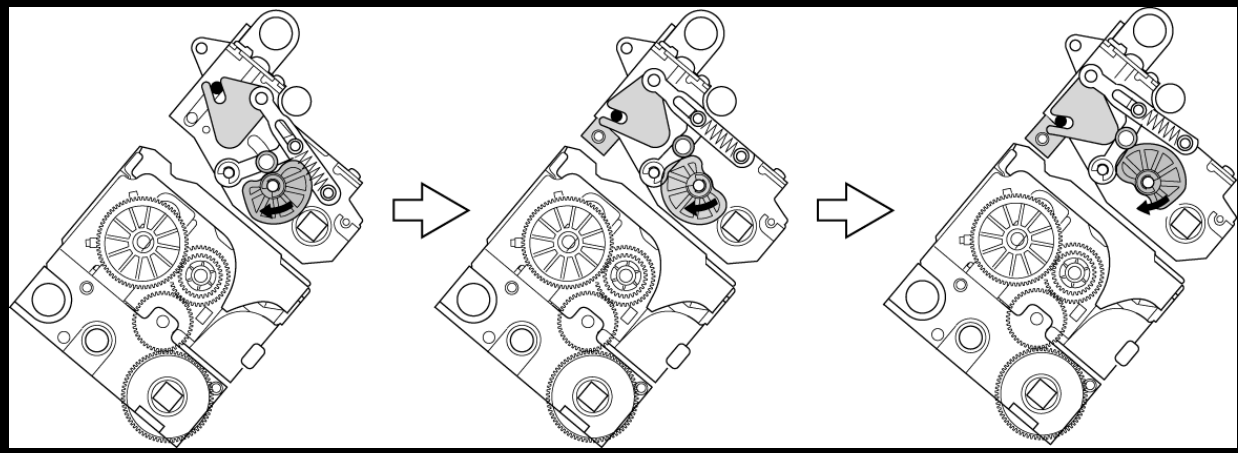

Stapling Unit Moving Control (1)

Corner Stapling (Front)

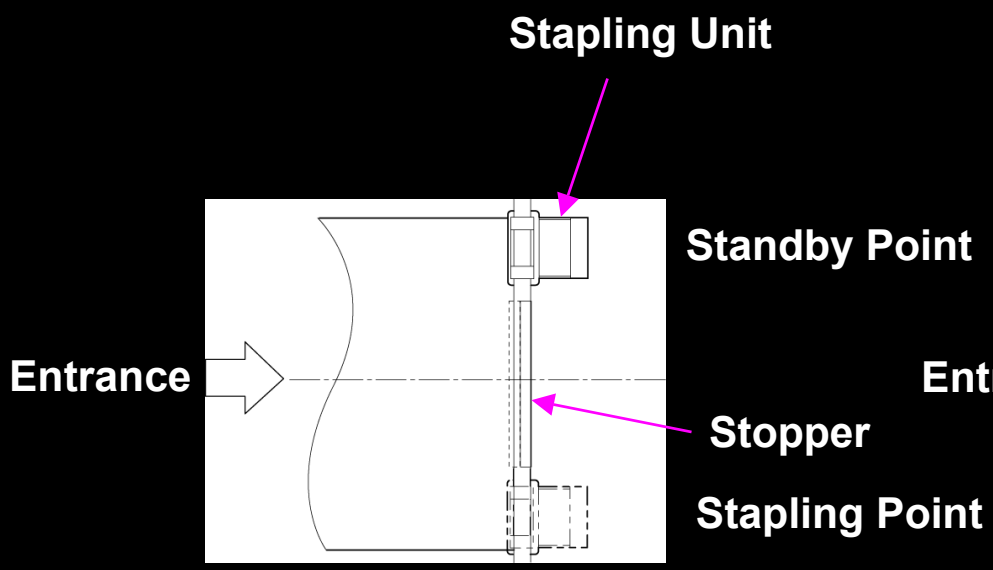

Corner Stapling (Rear)

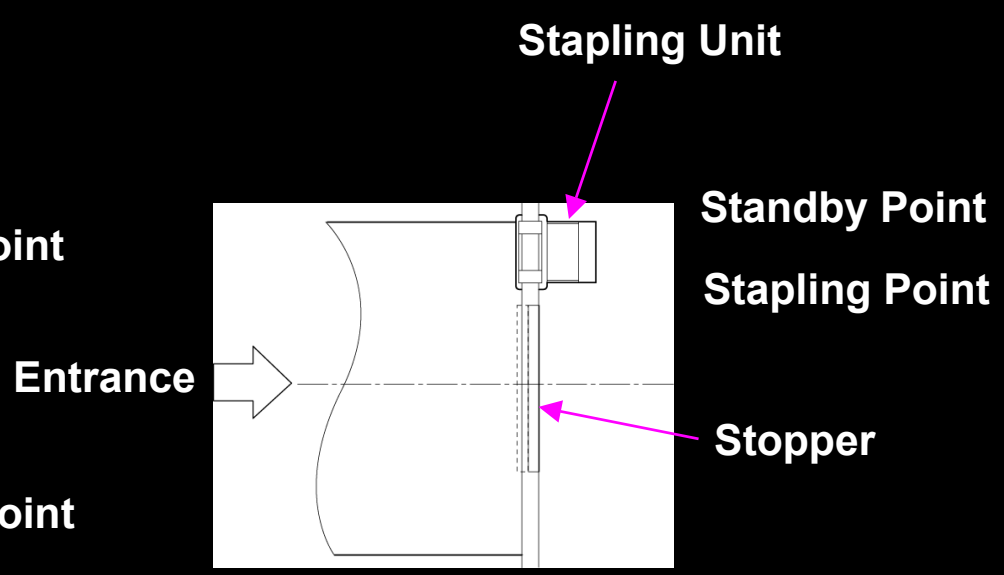

Stapling Unit Moving Control (2)

2-Point Stapling

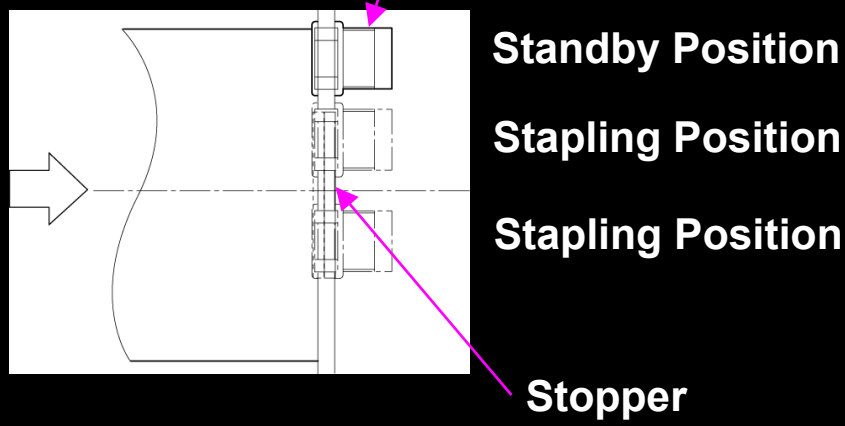

Note)

The 2-point center stapling operation is the same as 2-point stapling.

Exit Tray Mechanism

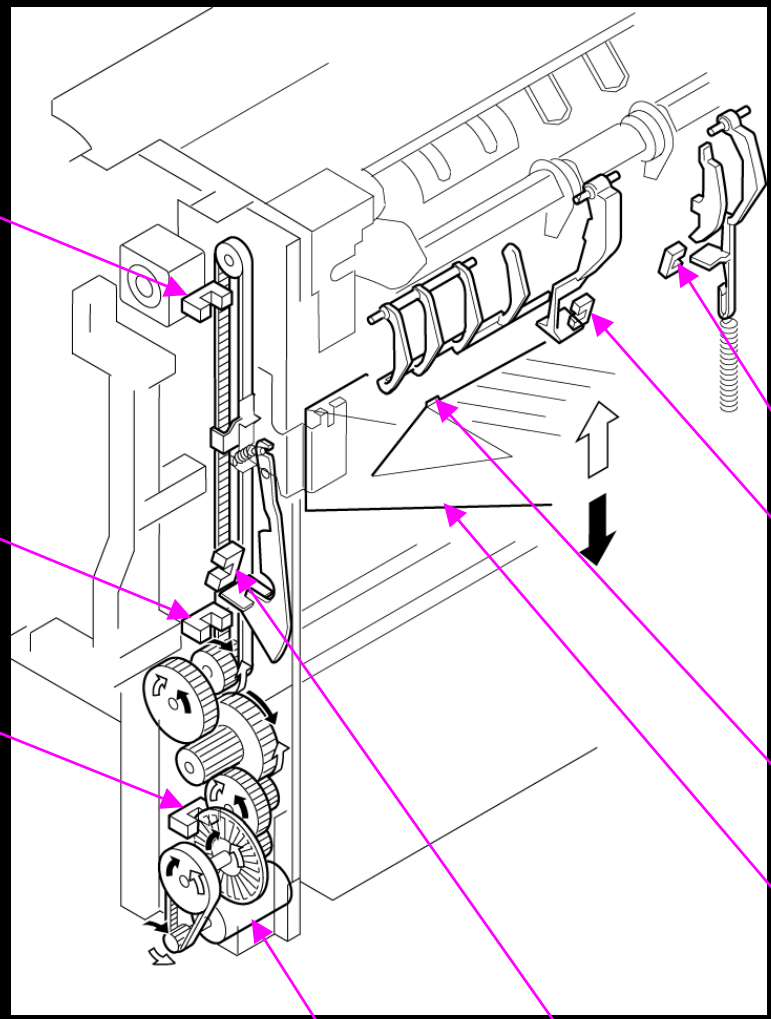

Shift Upper Limit Sensor

Shift Lower Limit Sensor

Shift Motor Clock Sensor

Exit Tray Sensor

Exit Tray Home Position Sensor

Edge

Exit Tray

Shift Motor

Stack Full Sensor

Booklet Tray

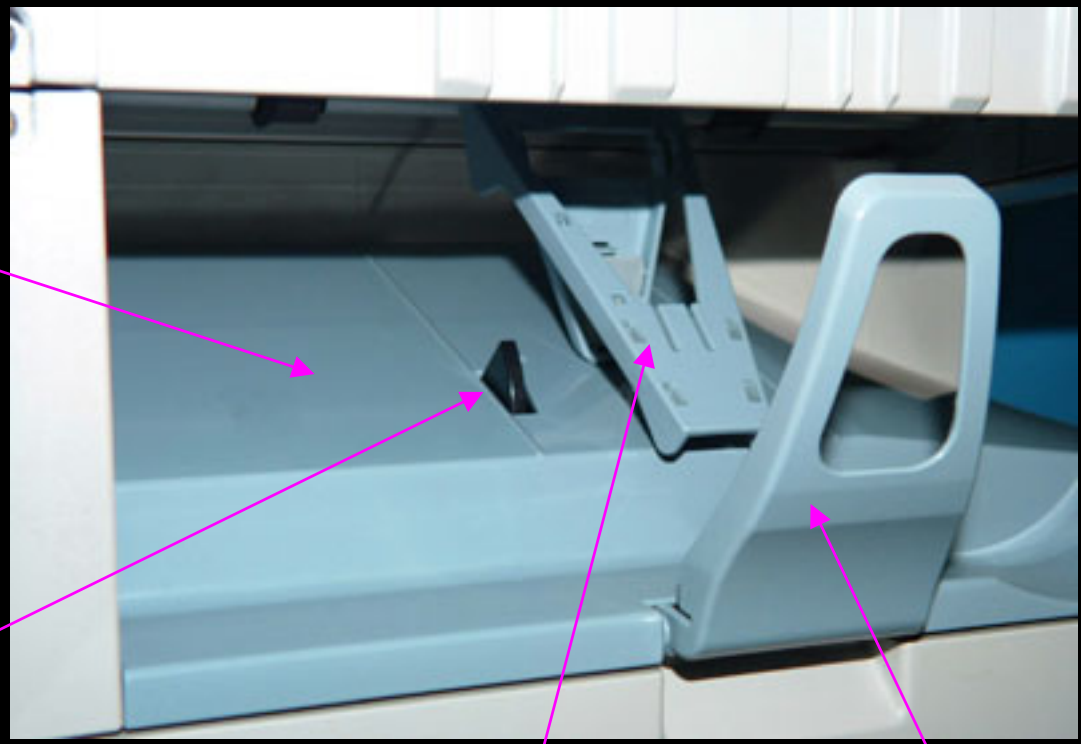

Transport Operation in Saddle Section (1)

Paper Transport

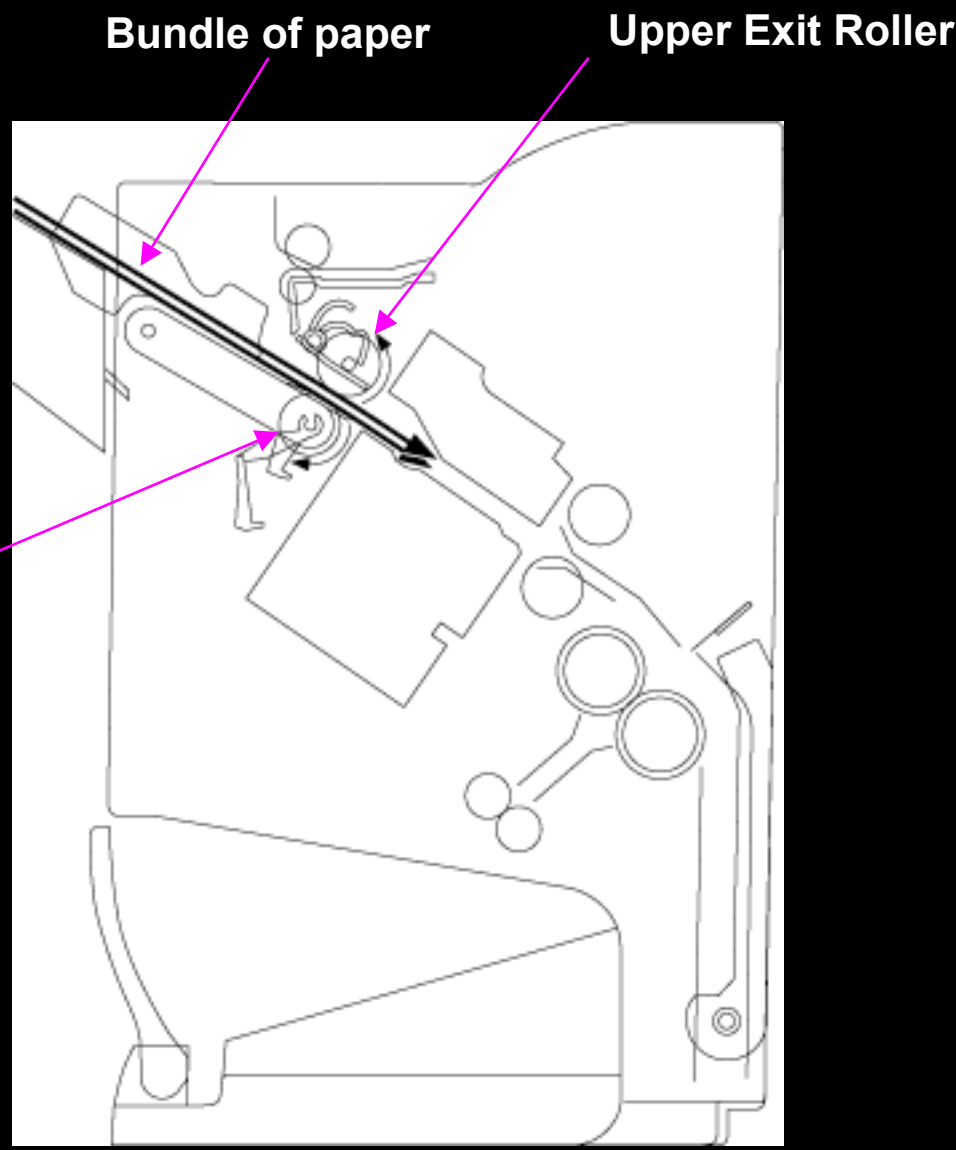

Transport Operation in Saddle Section (2)

Stapling

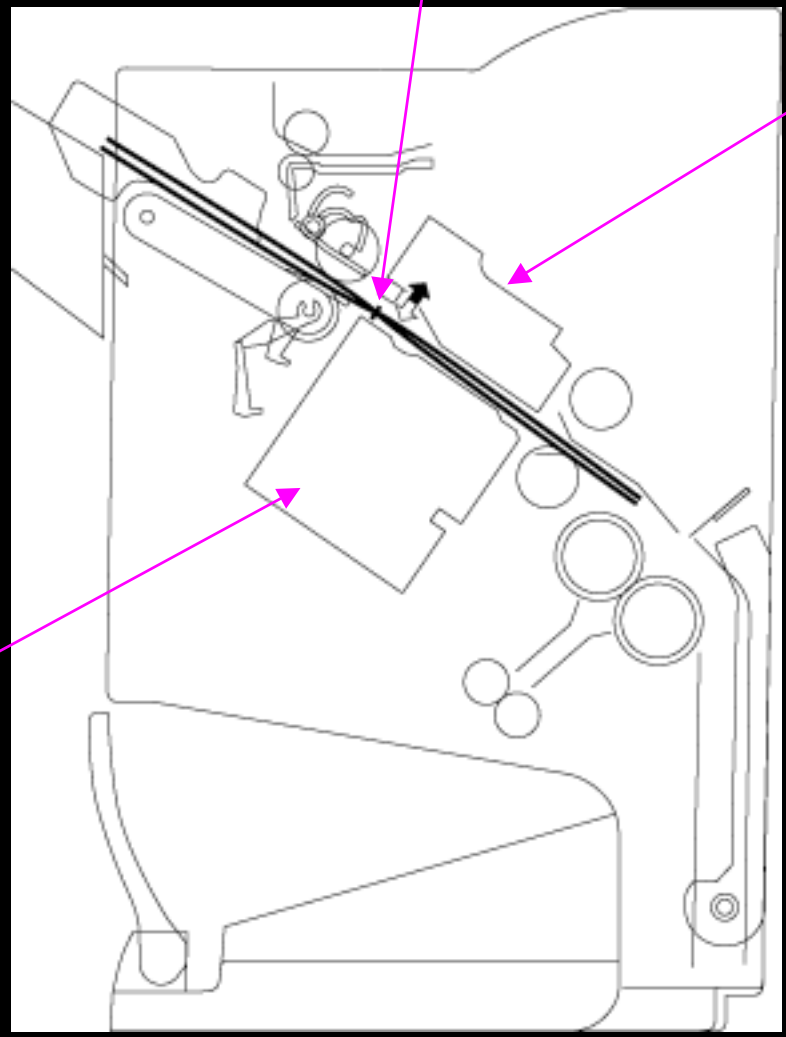

Transport Operation in Saddle Section (3)

Booklet Transport

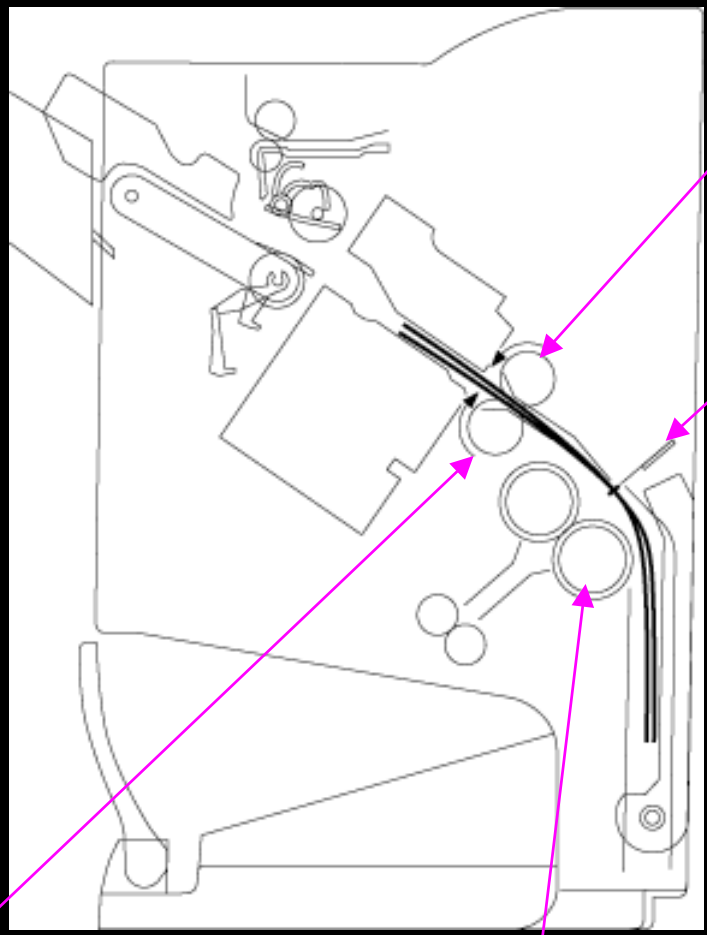

Transport Operation in Saddle Section (4)

Folding/Exit

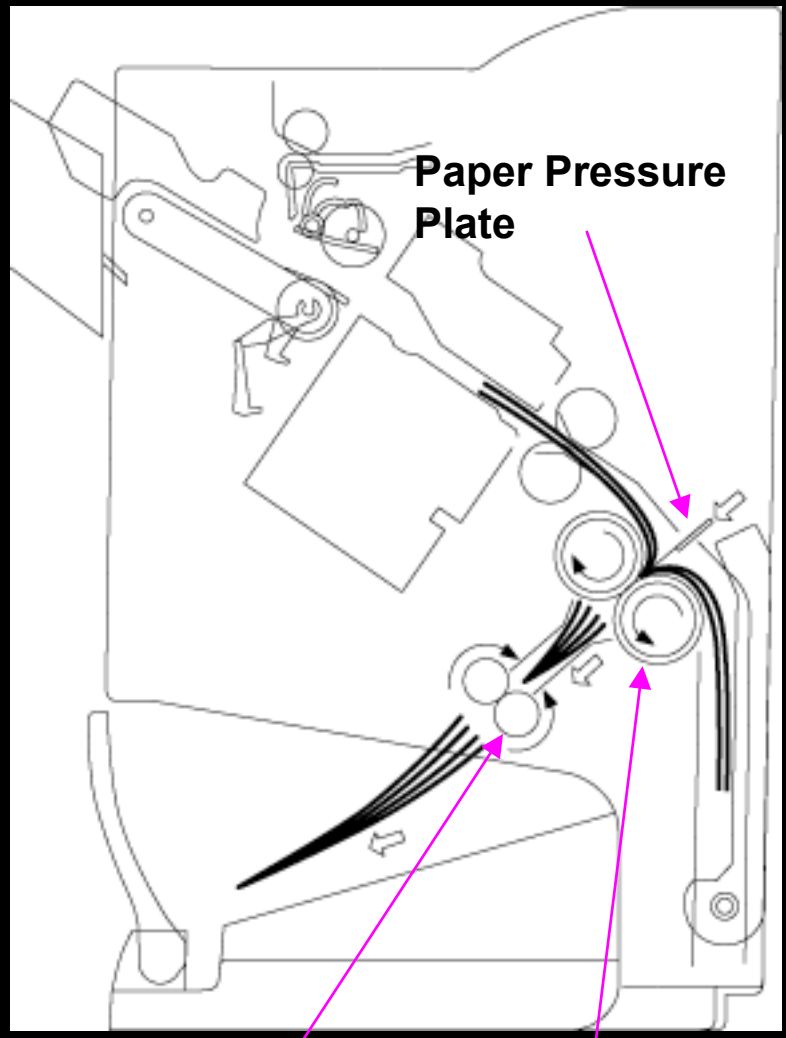

Folding Mechanism

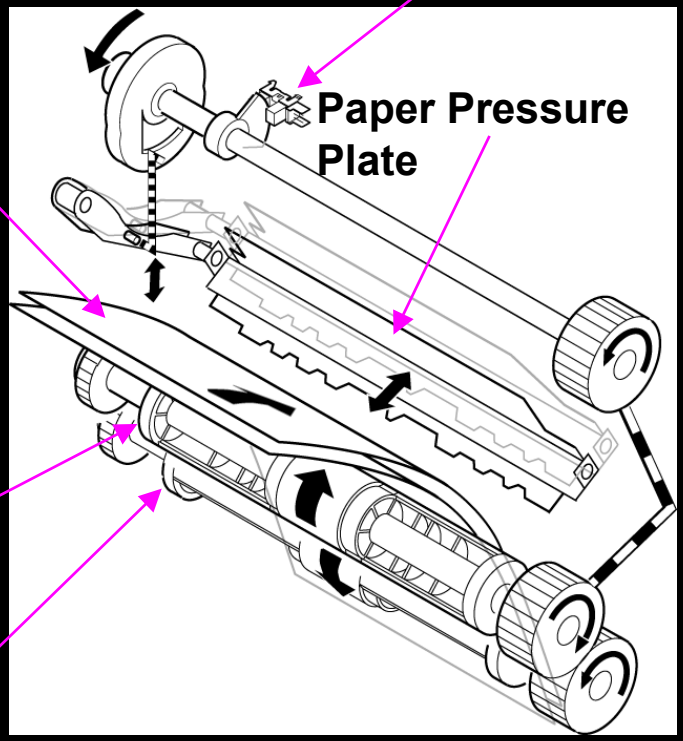

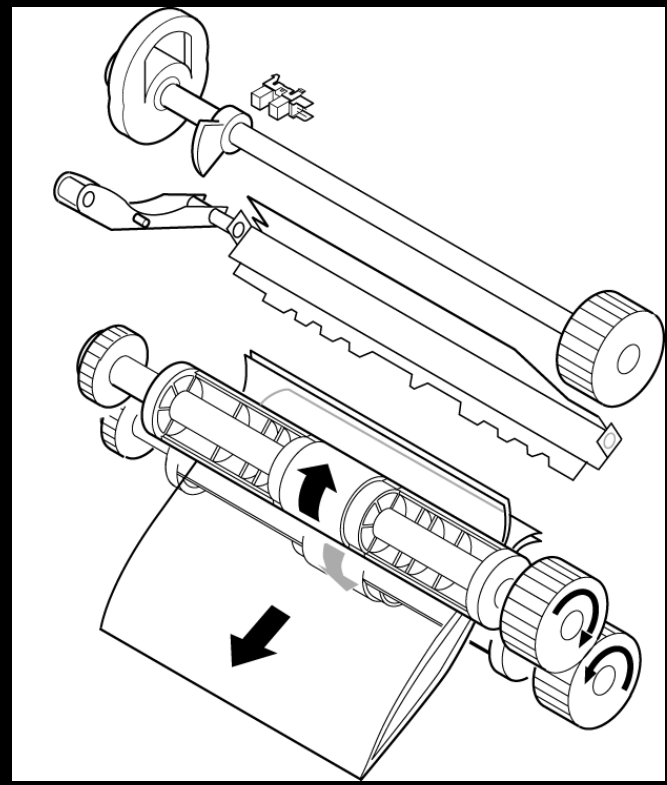

Folding Operation

Paper Folding Start Position

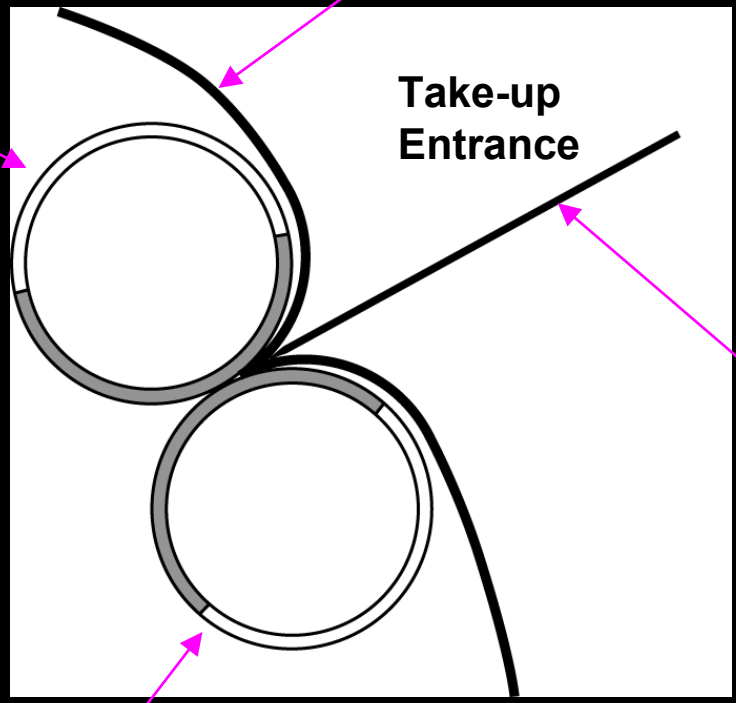

Operating Sequence

Operating Sequence

