PF-232 Paper Feed Cassette

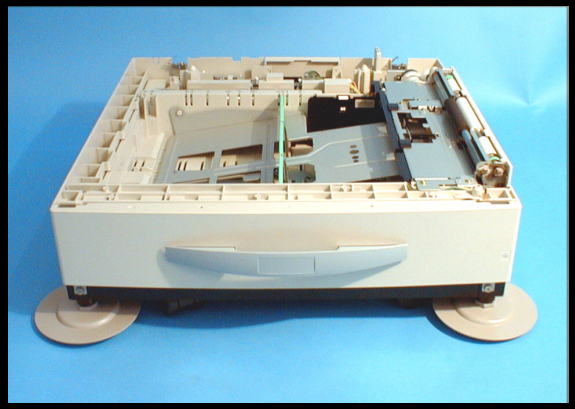

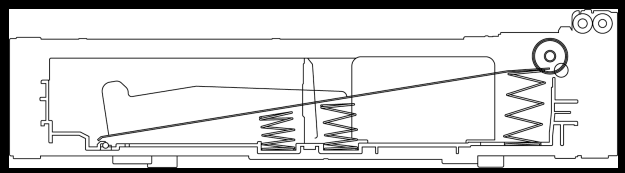

Detailed Specifications

Specifications

Type	Add-on paper source unit
Installation	Mounted beneath Upper Drawer of copier
Type of Copy Paper	Plain paper
Paper Sizes	B5L/C to A3L or 8-1/2 × 11L/C to 11 × 17L
Paper Weight	64 to 90 g/m² (17 to 24 lbs.)
Registration	Center
Capacity	500 sheets : 80 g/m² (21-1/4 lbs.)
Power Source	DC24V ± 10% (supplied from copier)
Power Consumption	15 W or less
Dimensions	Width: 535 mm (21 in.) Depth: 568 mm (22-1/4 in.) Height: 137 mm (5 in.)
Weight	8.5 kg (18-3/4 lbs.)

Component Identification

Drive System

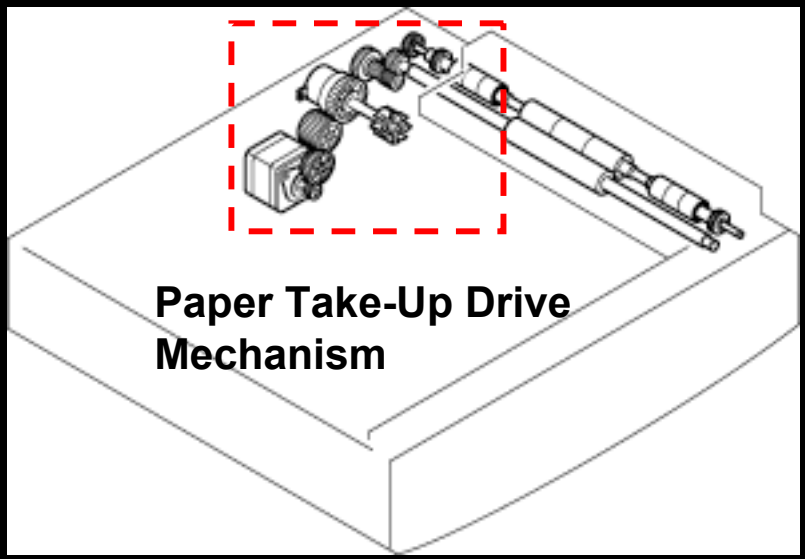

Electrical Components Layout

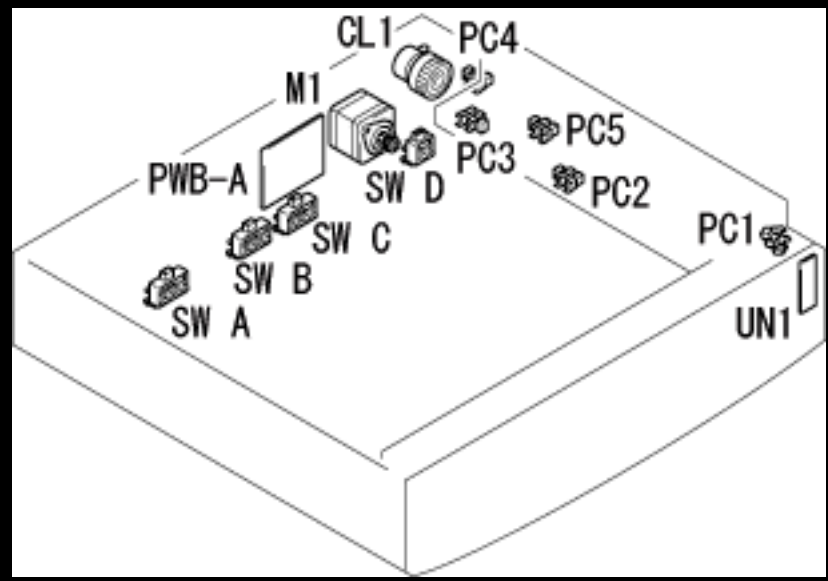

Paper Take-Up Mechanism

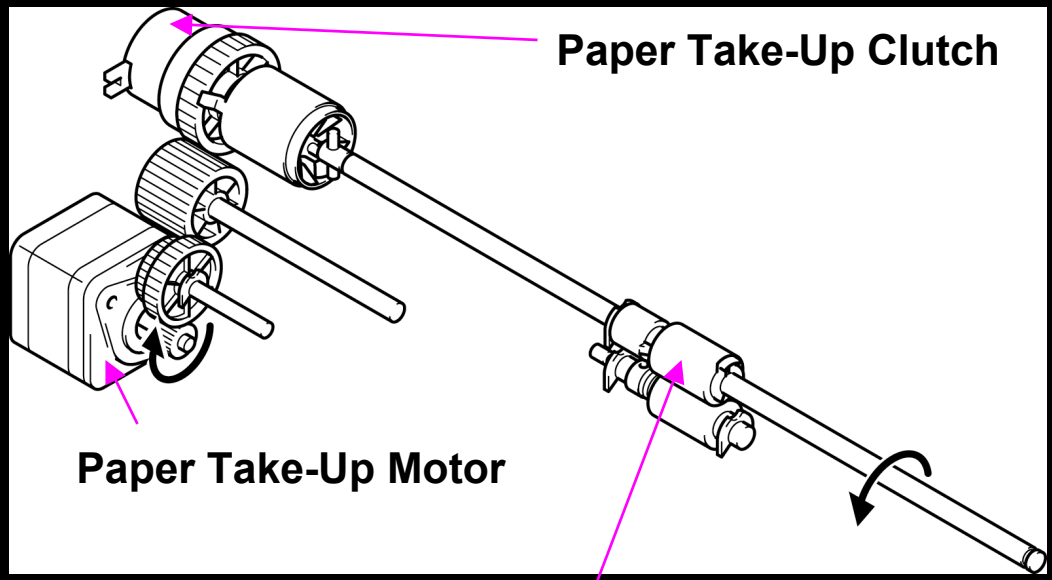

Paper Take-Up Roller

Separator Roller

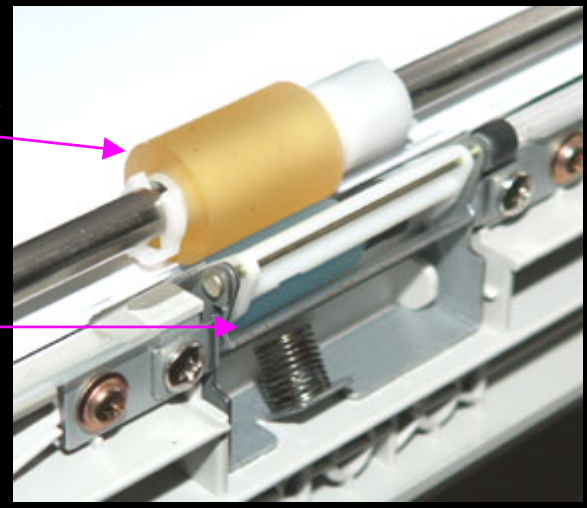

Double Feed Prevention

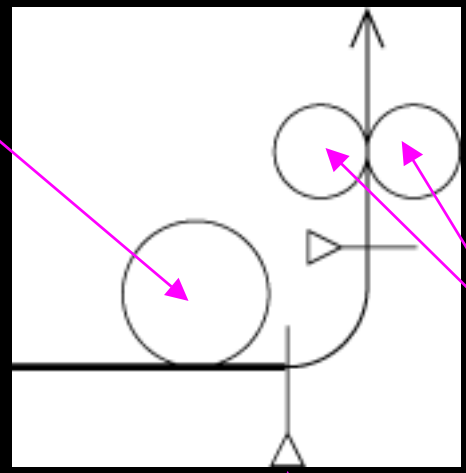

Vertical Transport Drive Mechanism

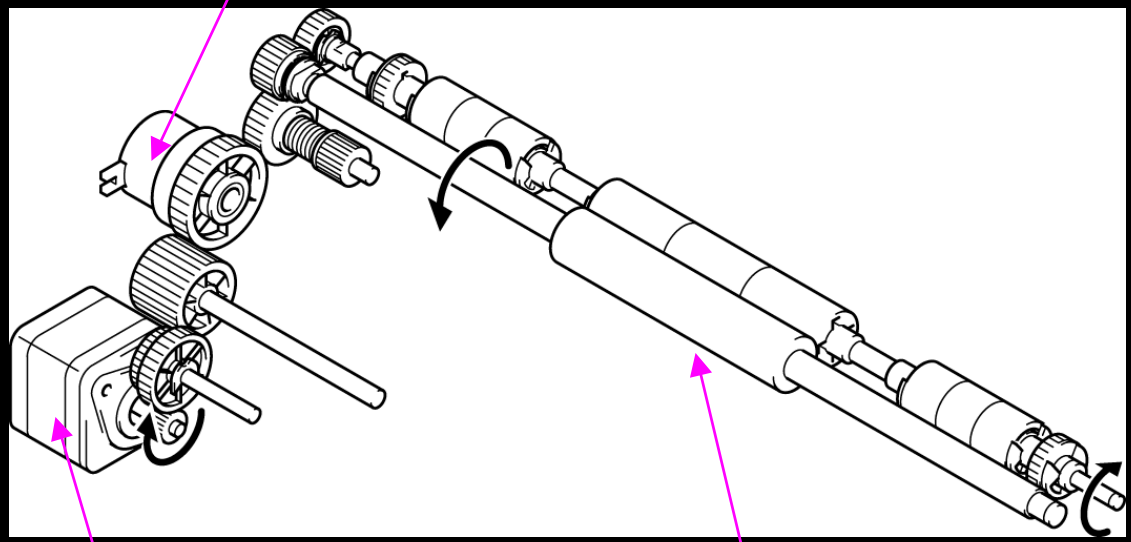

Speed Reduction Control

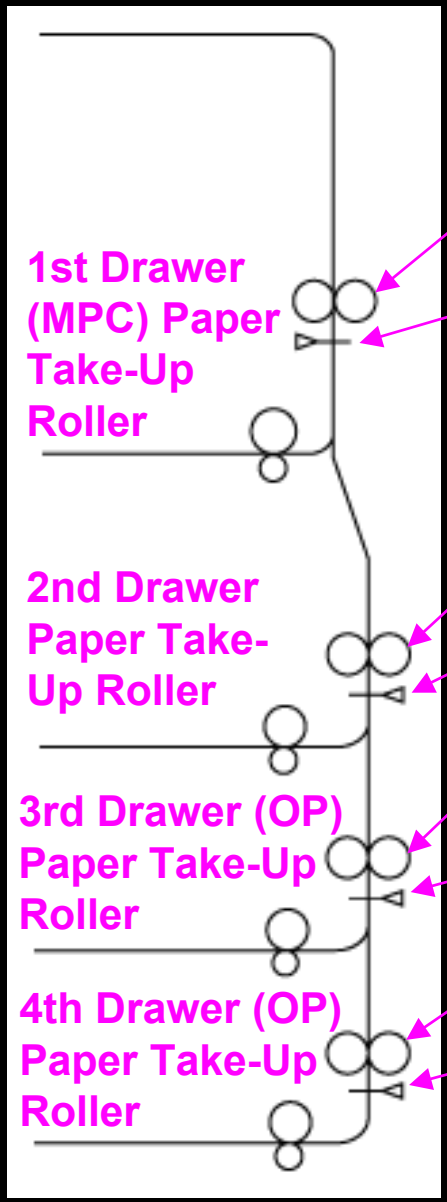

Paper Port	Transport Roller operated Speed Reduction Control
2nd Drawer	Vertical Transport Roller 1
3rd Drawer	Vertical Transport Roller 2
4th Drawer	Vertical Transport Roller 3

Edge Guides and Trailing Edge Stop

Trailing Edge Stop

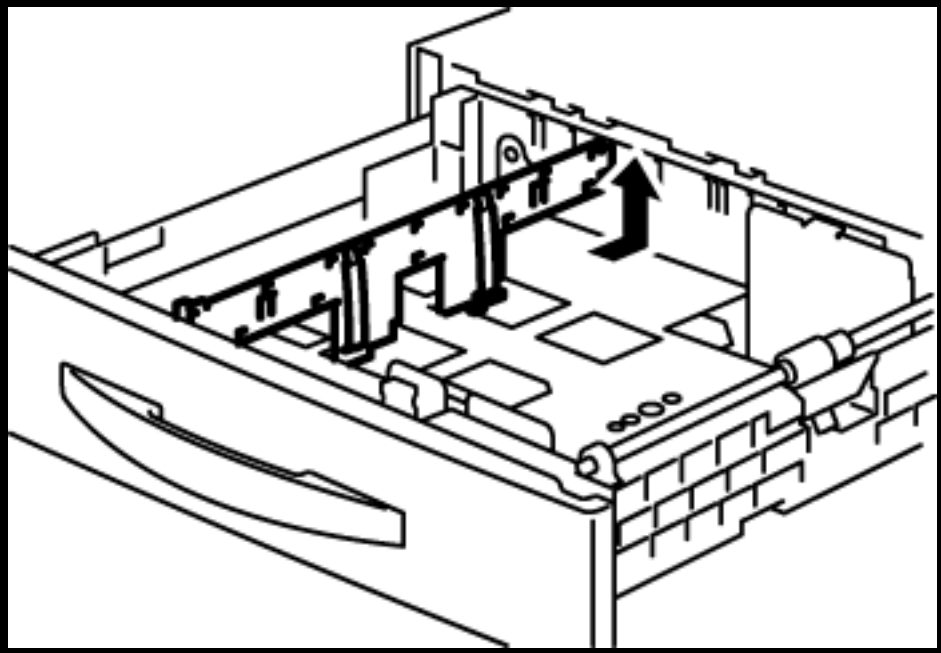

Edge Guides

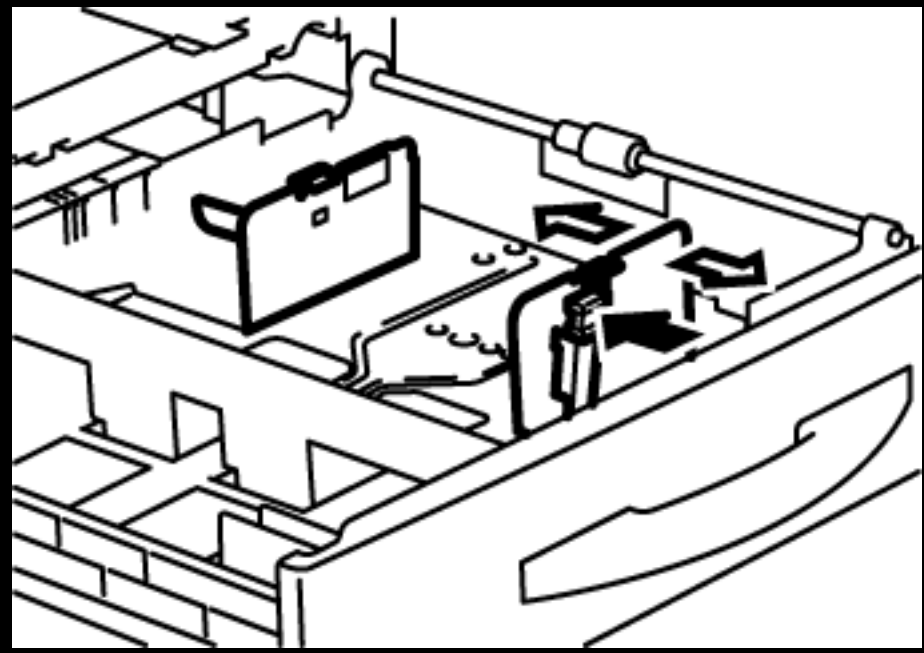

Paper Lifting Plate

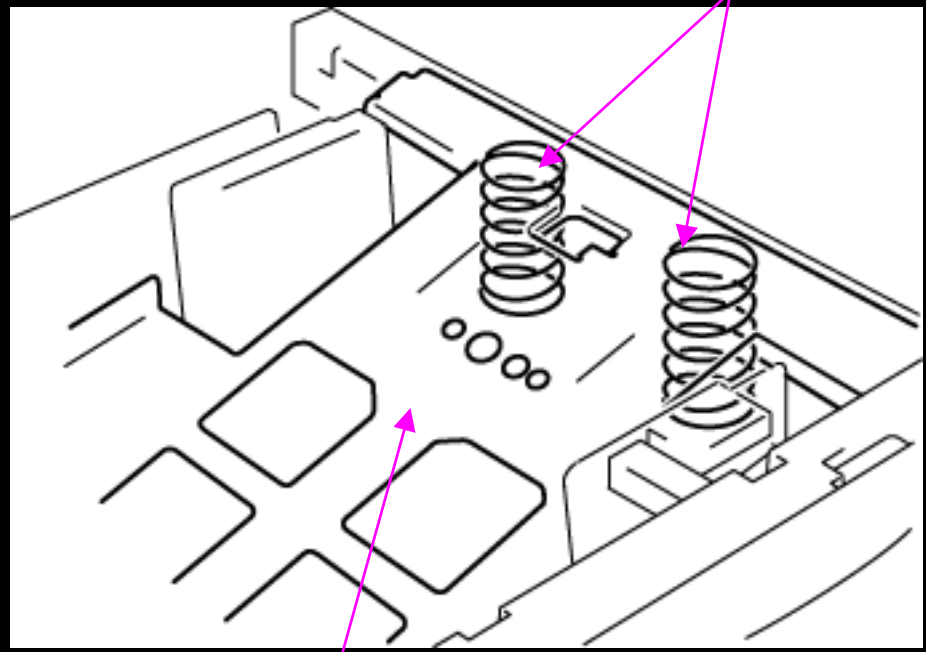

Drawer-In-Position Detection

Drawer Set Switch

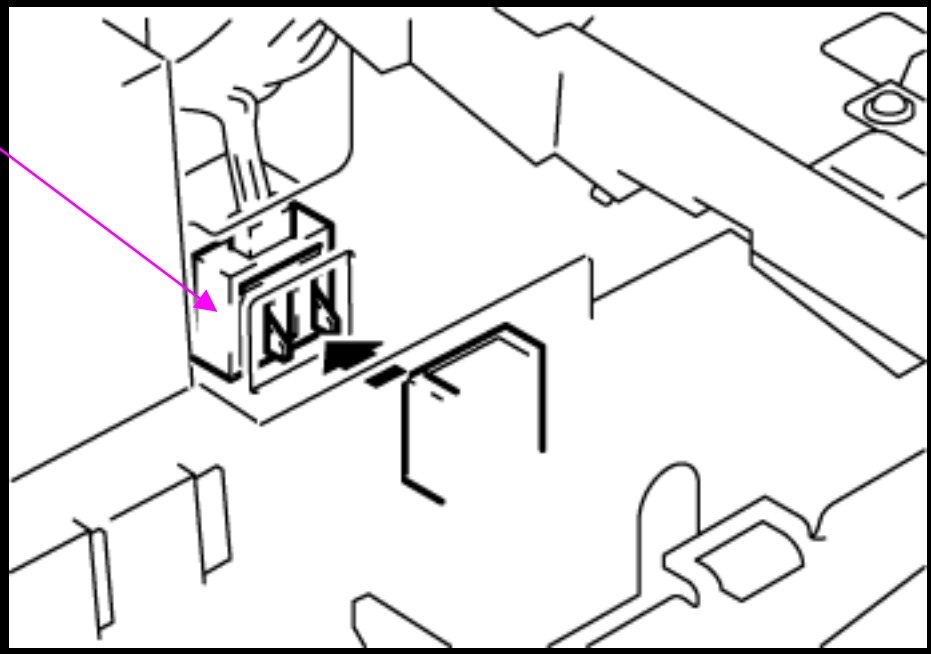

Paper Empty Detection

Paper Near Empty Detection

Paper Supply Level: 50 ± 30 sheets

Paper Near Empty Sensor

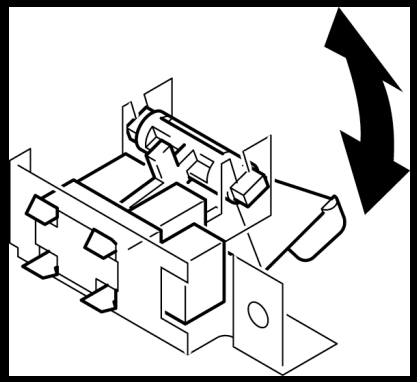

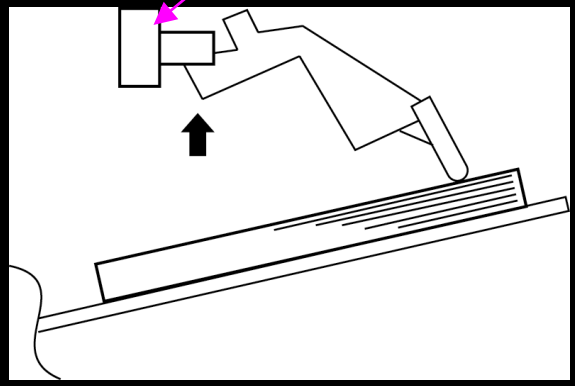

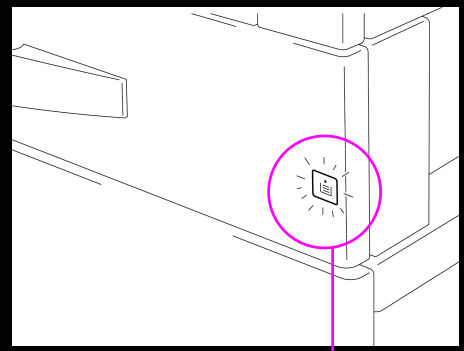

Paper Empty Detection

Paper Empty Sensor

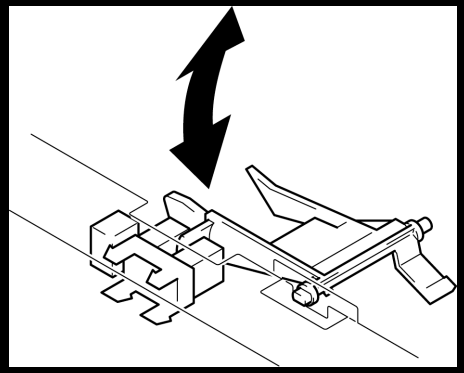

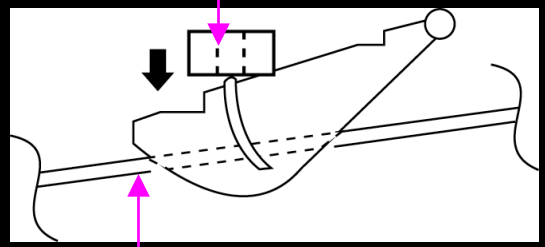

Paper Lifting Plate

Item	LED Indication
Drawer slid out	ON
Paper empty	ON
Paper near empty	Blinking
Paper loaded	OFF

Paper Size Detection

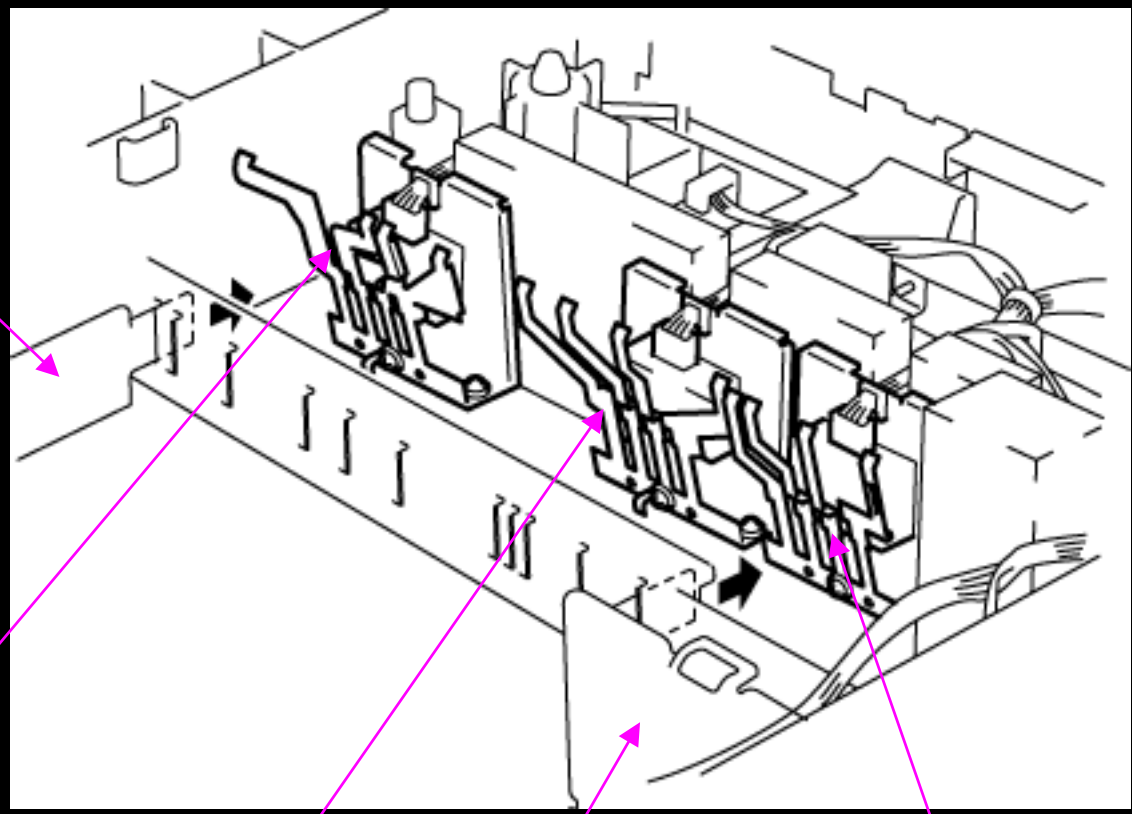

Operating Sequence

