PK-131 Punch unit for FS-231

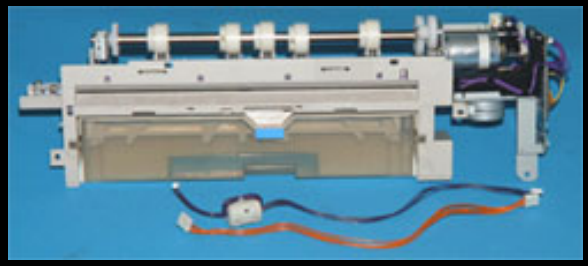

Specifications

Number of holes	2 or 3 holes (Select from the panel): Inch area 4 holes: Metric area
Diameter	2 or 3-hole: 8 mm 4-hole: 6.5 mm
Paper size	2-hole: 8-1/2 × 11L/C, 8-1/2 × 14L, 11 × 17L 3-hole: 8-1/2 × 11C, 11 × 17L 4-hole: A4C, A3L
Paper weight	64 to 209 g/m^2 (16 to 55-1/2 lbs.)
Punch trash capacity	3000 sheets: 80 g/m^2 (21-1/4 lbs.)
Power Source	Supplied from FS-231
Dimensions	Width: 90 mm (3-1/2 in.) Depth: 560 mm (22 in.) Height: 170 mm (6-3/4 in.)
Weight	2.6 kg (5-3/4 lbs.)

Detailed Specifications

Electrical Components Layout (1)

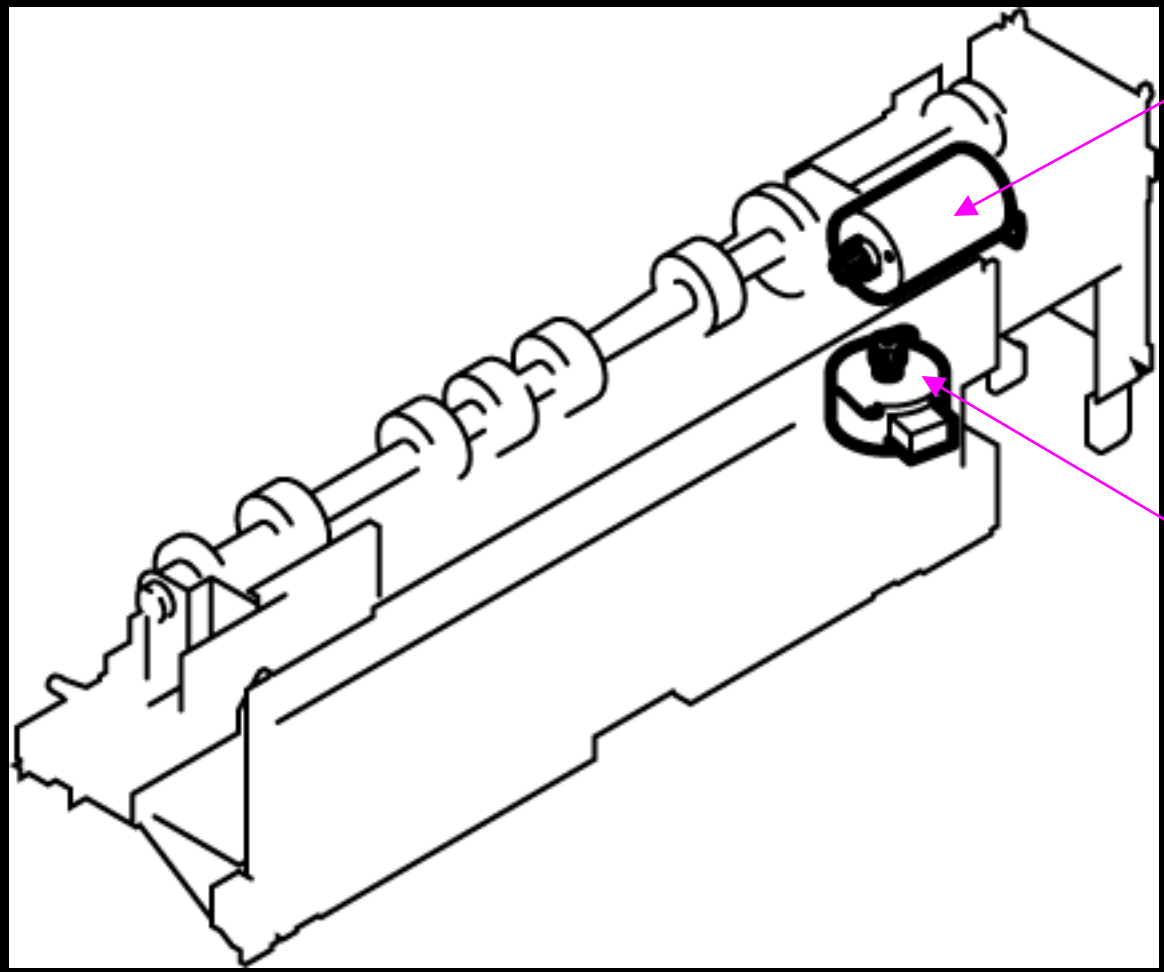

Electrical Components Layout (2)

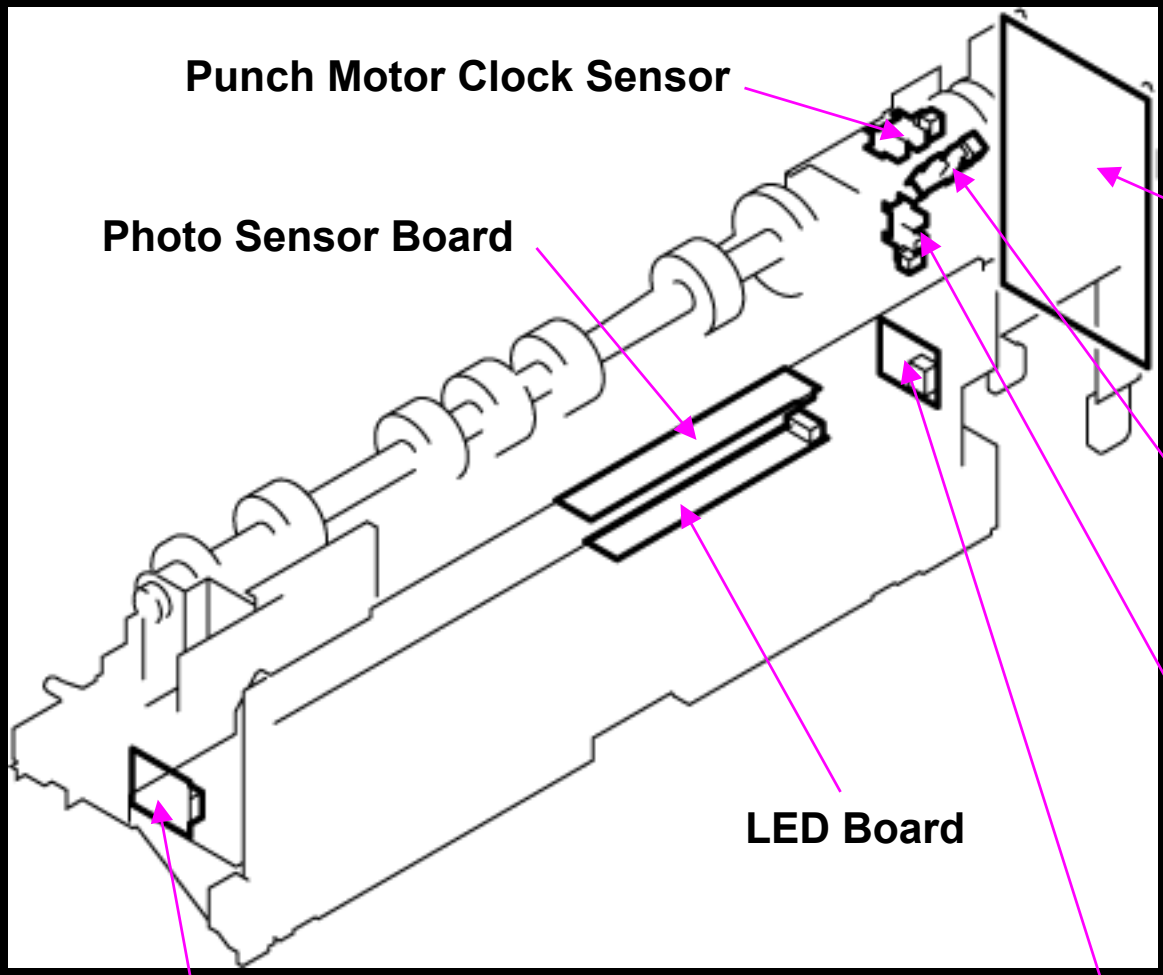

Punch Unit

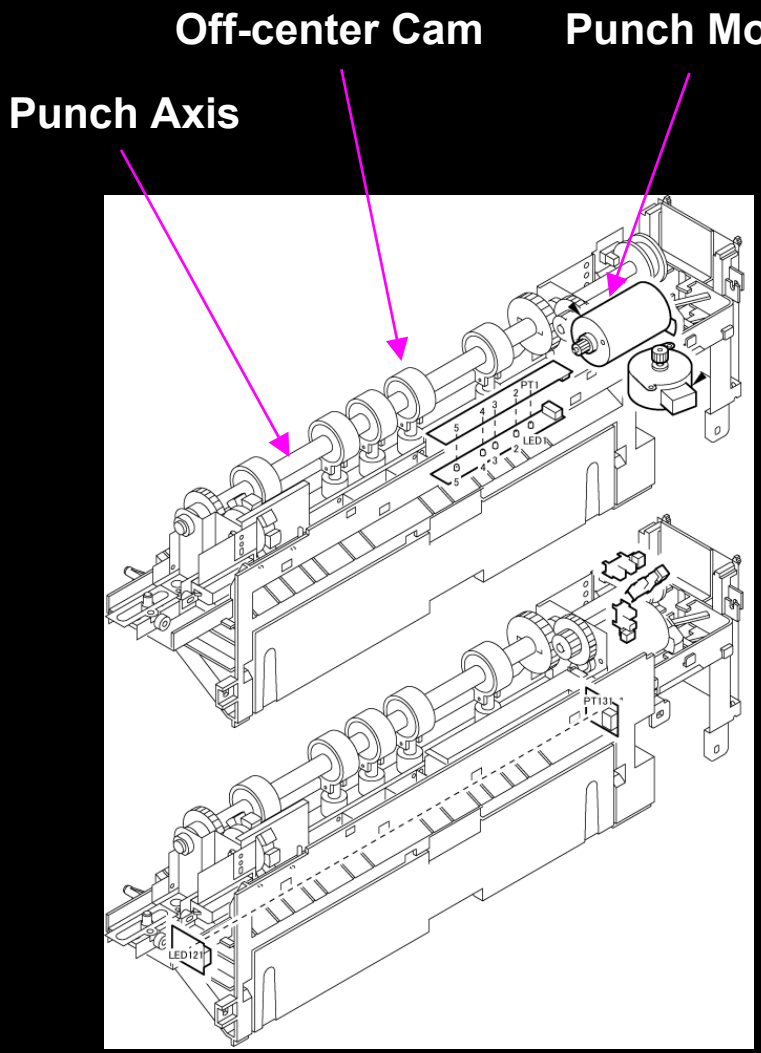

Outline

Punch Unit is an optional accessory of the Finisher FS-231 and attached to the Paper Feed Section.

Punching is made at trailing edge of paper with Punch Axis rotated.

Punch Operation

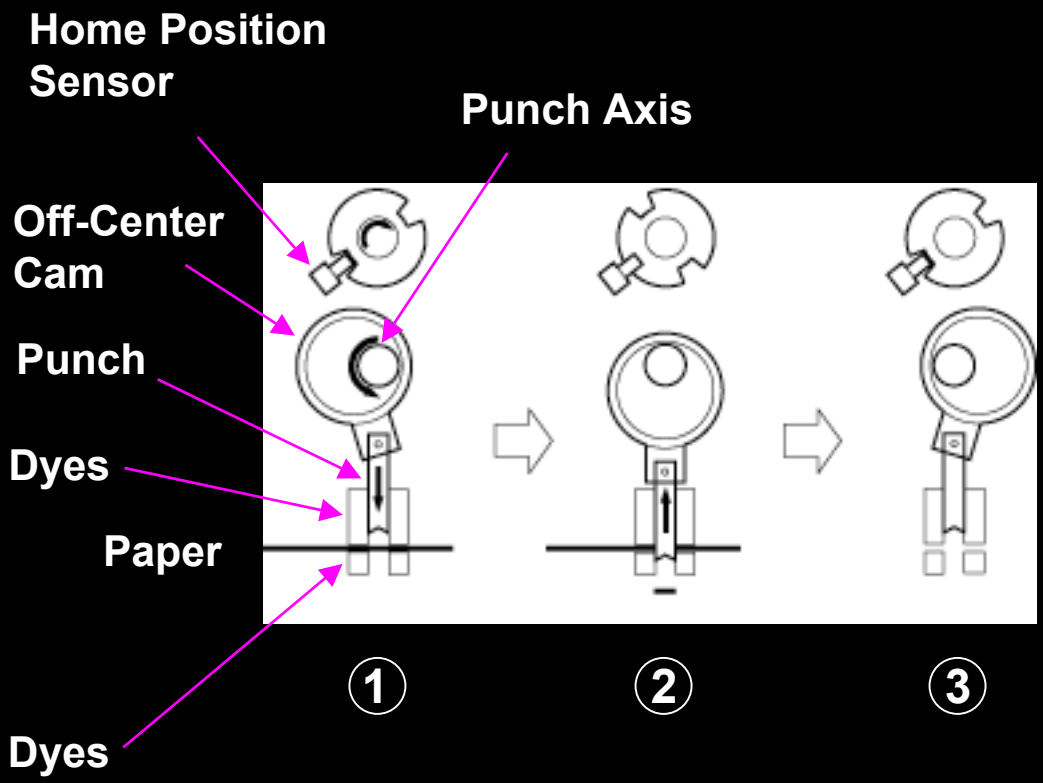

1. Punch Axis Stops at Home Position.

2. Punch Axis rotates by 90 deg. in forward direction and punch holes are made.

3. Punch Axis rotates by another 90 deg. in forward direction and punch operation is completed.

Side Registration Operation (1)

Side Registration Home Position Sensor

Punch Slide Unit

Trailing Edge Detection Sensor

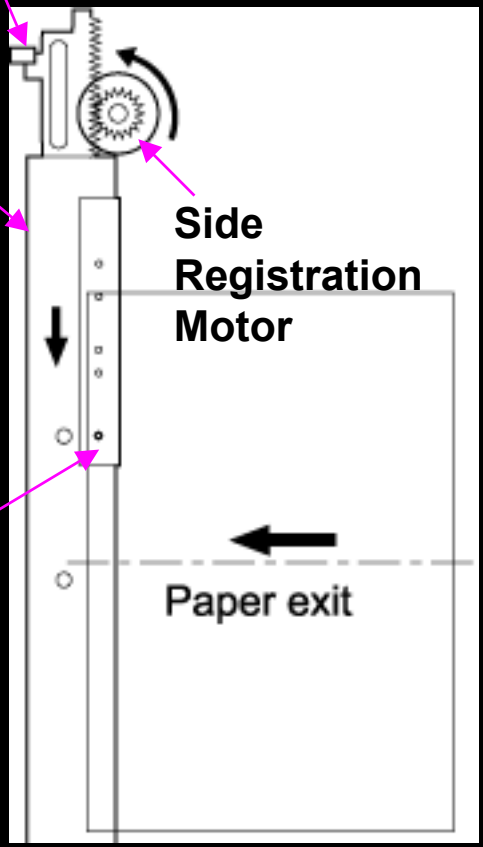

Operation 1

Trailing Edge Detection Sensor detects paper edge

⬇

Side Registration Motor rotates

⬇

Punch Slide Unit moves toward front side

Side Registration Operation (2)

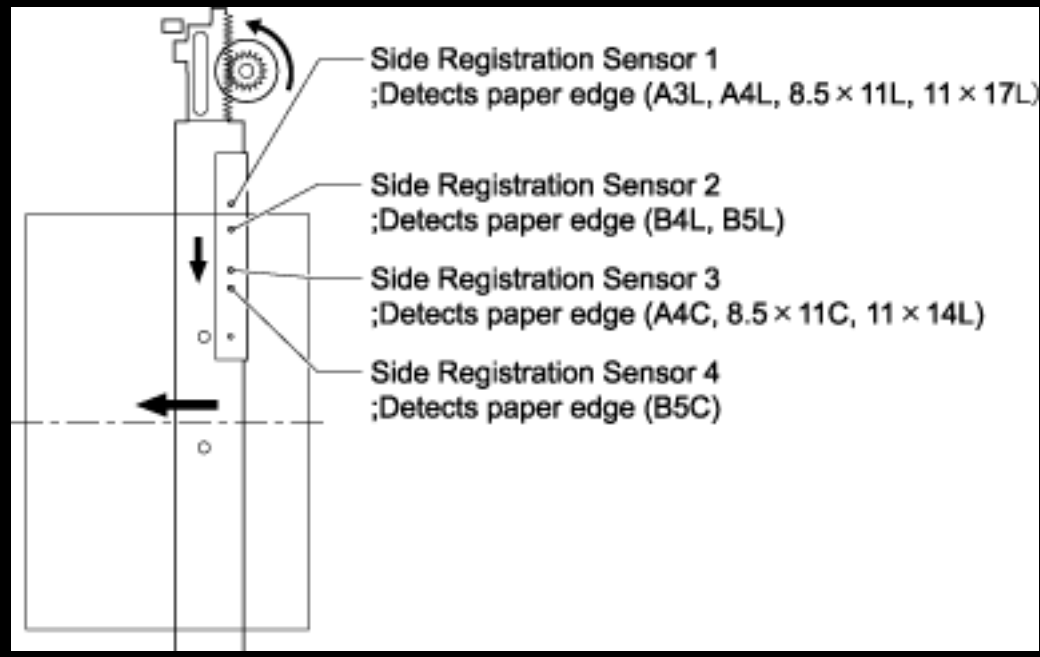

Operation 2

Side Registration Sensor detects paper edge at rear side

⬇

Side Registration Motor moves Punch Slide Unit at the specified position

⬇

Punch Slide Unit stops

Side Registration Operation (3)

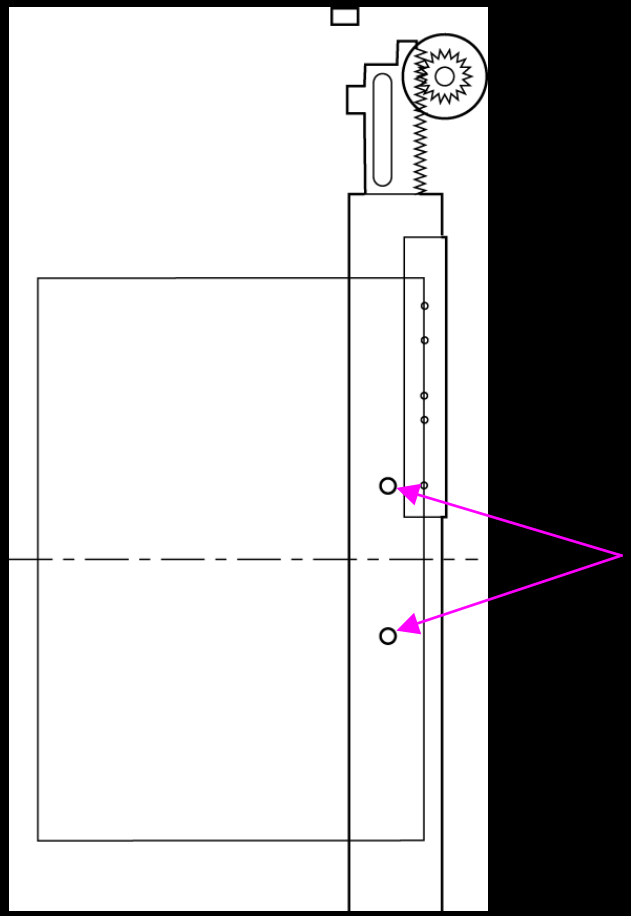

Operation 3

Paper Trailing Edge Sensor detects paper trailing edge

↓

Transport Motor is stopped

↓

Paper transport is stopped

↓

Punch Motor is driven to punch holes

↓

Transport Motor is driven, at the same time, Side Registration Motor is driven in reverse direction

↓

Punch Slide Unit is returned to its home position

Operating Sequence

Punching Operation

