CF9001

PARTS MANUAL

MINOLTA

PREFACE

1. The part numbers listed in Parts Manual are those which were assigned to the parts making up the machine at the time machine was originally introduced onto the market.

2. Parts whose INDEX numbers are shown white against a black background in the illustration are those to be used in only certain market areas. These part numbers are given in the lower half part of the list section. Check the SFIX No. listed in SFIX CHART on page II to find which part number is applicable to your own area.

3. Parts whose INDEX numbers are shown black against a white background in the illustration are those to be used in all market areas. These parts are listed on the upper half part of the list section.

4. If "NS" follows a part number given in the list section, it indicates that we do not keep a stock of the part. The part is not required for ordinary service jobs, either.

5. If "RP" is shown in the REC column of the list section, it indicates that the part is functionally important.

6. In the exploded views in this Parts Manual the parts (Screws & Washes, etc...) which are indicated with a "four-digit" numbers are listed in numerical order in the section "SCREWS AND WASHERS". Please check these "four-digit" numbers with the part numbers ("ten-digit" numbers) which should be used for ordering the part.

7. All part numbers consist of "ten-digit" which should all be quoted when ordering a part. The price of parts can be obtained by referring to the "Parts Price List" which is separately issued.

8. All infomation contained in this parts manual is subject to change.

CONTENTS

9. CONTROL SECTION ••••••

SFIX CHART

SFIX No.	COUNTRY	VOLTAGE	FREQUENCY (Hz)	PAPER SIZE	SFIX No.	COUNTRY	VOLTAGE	FREQUENCY (Hz)	PAPER SIZE
011	JAPAN	100V	50/60	METRIC	311	USA/CANADA	120V	60	INCH
211	EUROPE/N EUROPE/E EUROPE/SWIZERLAND/ THIRD AREA/OCEANIA/ S ARABIA/PAKISTAN/S AFRICA/RUSSIA/KOREA	200-240V	50	METRIC	313	TAIWAN	110V	60	METRIC



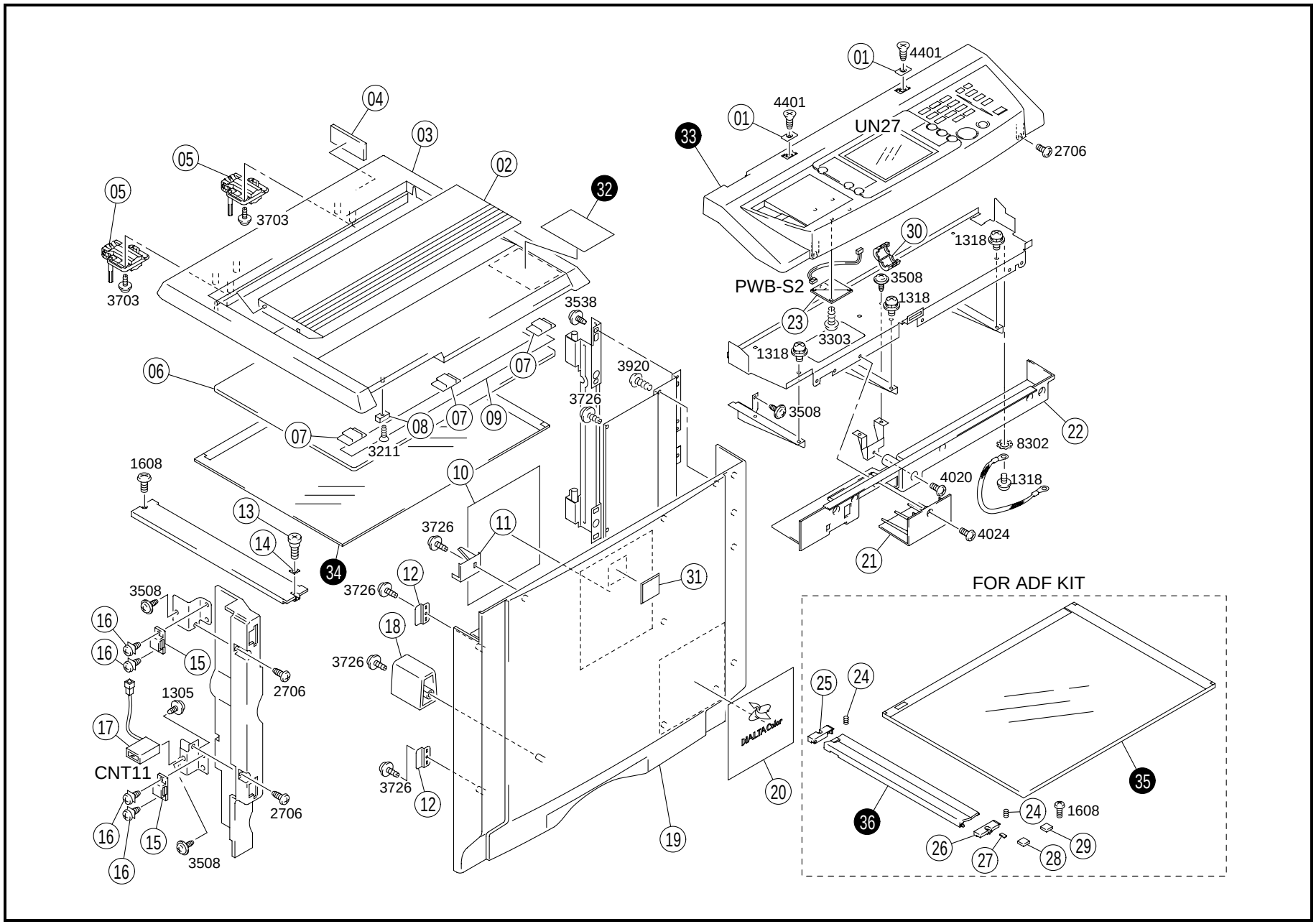
01
4401
01
4401
UN27
2706
33
04
03
02
05
05
3703
3703
32
30
1318
PWB-S2
3508
1318
23
3303
1318
3538
3920
3726
06
07
07
07
08
09
3211
3508
22
8302
4020
1318
4024
21
1608
10
13
14
3726
11
34
12
3726
31
3508
16
16
15
2706
18
3726
1305
17
CNT11
2706
3726
12
20
19
16
15
3508
16
FOR ADF KIT
25
24
35
36
24
1608
26
27
28
29

INDEX	PART NO.	PART NAME	REC	QTY
01	1139-1907-01	PLATE		2
02	1139-1702-02	ORIGINAL HOLDER		1
03	1139-1701-04	ORIGINAL COVER		1
04	1144-1699-01	PLATE		1
05	1139-1705-01	HINGE		2
06	1139-1704-14	PAD		1
07	1139-1703-03	SLIDER		3
08	9326-2820-11	MAGNET		1
09	1139-1706-01	POLYESTER FILM		1
10	1154-7319-01	LABEL		1
11	1144-1023-02	ADJUSTING PLATE		1
12	1154-1008-01	SUCTION PLATE		2
13	1065-1360-01	SHOULDER SCREW		1
14	1053-3869-01	PLATE SPRING		1
15	1500-2640-04	MAGNET CATCH		2
16	1053-1324-01	TAPPING SCREW		4
17	9323-1410-11	COUNTER TOTAL (CNT11)		1
18	1144-1021-02	SPACER		1
19	1179-1011-01	FRONT COVER		1
20	1179-7373-01	LABEL		1
21	1144-2030-01	LID		1
22	1144-2029-03	COVER		1
23	1155-0117-01	PW BOARD-S (PWB-S2)		1
24	1139-1904-02	PRESSURE SPRING OPTION		2
25	1139-1906-01	HOLDER OPTION		1
26	1139-1905-01	HOLDER OPTION		1
27	1139-1915-02	SPONGE OPTION		1
28	1139-1909-01	SPONGE OPTION		1
29	1075-7821-01	POLYESTER FILM OPTION		2
30	9326-1000-91	FERRITE CORE		1
31	4002-7305-01	LABEL		1

INDEX	PART NO.	PART NAME	REC	QTY	SFIX
32	1144-7311-01	LABEL		1	011
33	1179-0147-02	CONTROL PANEL ASSY CONTROL (UN27)		1	011
33	1179-0148-02	CONTROL PANEL ASSY CONTROL (UN27)		1	211, 311, 313
34	1154-0754-01	ORIGINAL GLASS ASSY		1	011
34	1154-0755-01	ORIGINAL GLASS ASSY		1	311
34	1154-0756-01	ORIGINAL GLASS ASSY		1	211, 313
35	1154-0158-01	ORIGINAL GLASS OPTION		1	011
35	1154-0159-01	ORIGINAL GLASS OPTION		1	311
35	1154-0160-01	ORIGINAL GLASS OPTION		1	211, 313
36	1154-1664-01	WIDTH SCALE OPTION		1	011
36	1154-1665-01	WIDTH SCALE OPTION		1	311
36	1154-1666-01	WIDTH SCALE OPTION		1	211, 313

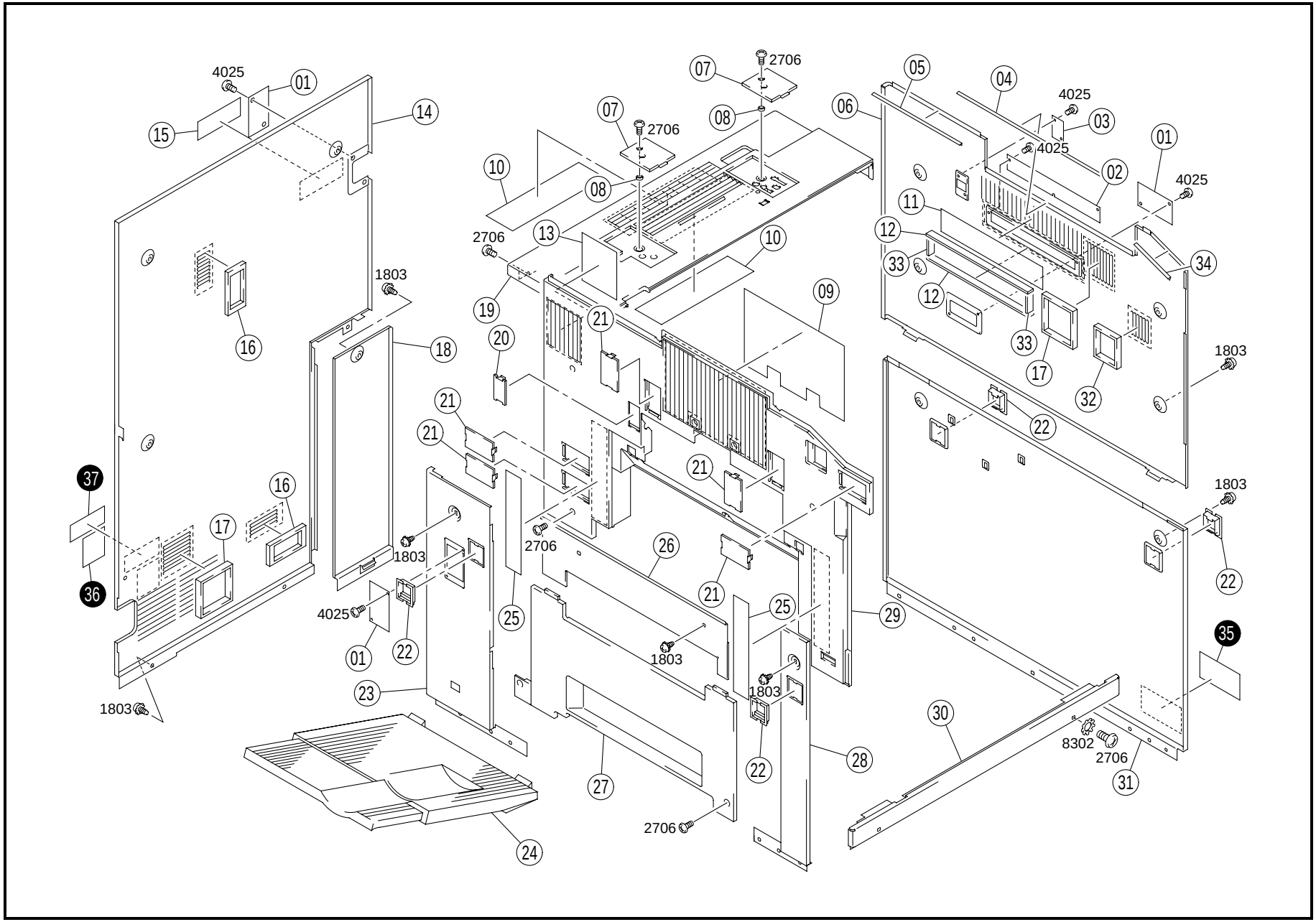
4025
01
15
14
07
2706
08
10
13
19
20
21
09
06
05
04
03
02
11
12
33
34
17
32
22
1803
16
18
37
36
25
26
29
35
23
24
27
28
30
31
8302

INDEX	PART NO.	PART NAME	REC	QTY
01	1138-1120-12	COVER		3
02	1179-1055-01	COVER		1
03	1144-1048-01	COVER PLATE		1
04	1179-2472-01	SHIELD		1
05	1179-2473-01	SHIELD		1
06	1179-1046-01	RIGHT COVER		1
07	1144-1706-01	COVER		2
08	1144-1707-01	COLLAR		2
09	1144-1110-01	FILTER		1
10	1154-1107-01	FILTER		2
11	1179-2428-01	FILTER		1
12	1179-2471-01	SHIELD		2
13	1154-2429-01	FILTER		1
14	1179-1047-01	REAR COVER		1
15	1179-7303-02	LABEL		1
16	1144-1049-01	SPONGE		2
17	1179-2427-01	SEAL		2
18	1144-1052-02	COVER		1
19	1144-1004-17	TOP COVER		1
20	1136-1030-02	COVER		1
21	1174-1015-01	COVER		5
22	1144-1040-03	COVER		4
23	1144-1038-02	LEFT COVER-RR		1
24	1139-0156-02	TRAY		1
25	1144-1039-01	SHEET		2
26	1144-1041-02	LEFT COVER-MID		1
27	1144-1037-04	LEFT COVER-MID		1
28	1144-1026-01	LEFT COVER-FNT		1
29	1144-1036-06	LEFT COVER-UPR		1
30	1144-1030-03	COVER		1
31	1144-1051-14	RIGHT COVER		1
32	1144-2097-01	SPONGE		1
33	1179-2470-01	HIELD		2
34	1179-2474-01	SHIELD		1

INDEX	PART NO.	PART NAME	REC	QTY	SFIX
35	1274-7305-01	LABEL CAUTION		1	211, 311, 313
36	1052-7214-01	LABEL CAUTION		1	211
37	0818-7319-01	LABEL		1	211

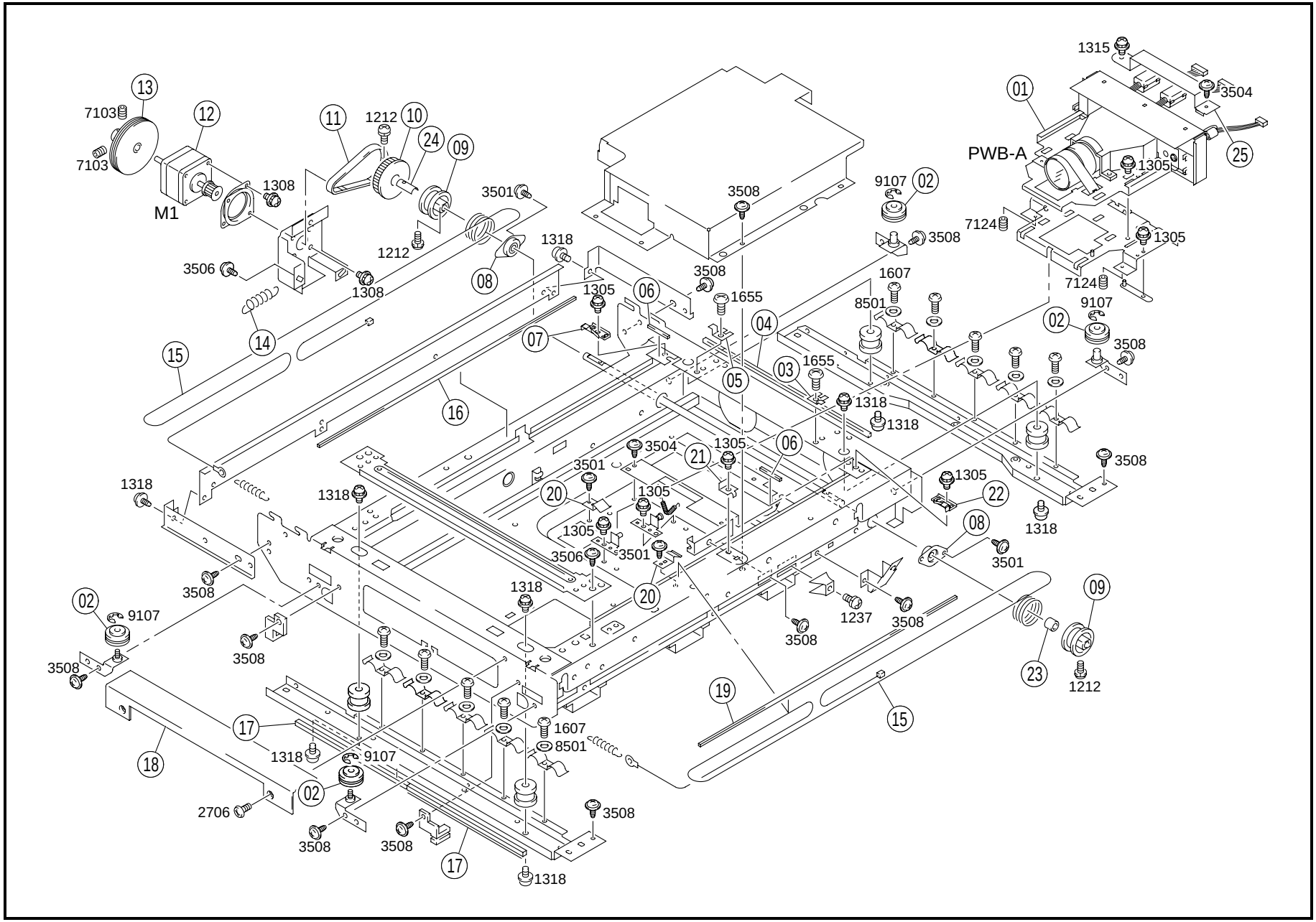
1315
3504
01
25
PWB-A
1305
7124
1305
7124
9107
02
3508
3508
1607
8501
9107
02
3508
1655
04
03
1655
05
1318
1318
06
3504
21
1305
3501
20
1305
1305
3506
3501
20
1305
22
3508
1318
08
3501
09
1237
3508
3508
23
1212
19
15
13
7103
7103
12
M1
1308
11
1212
10
24
09
3501
1212
1318
08
3506
1308
14
15
16
07
06
3508
1305
1655
1318
1318
3508
1318
1318
3508
02
9107
3508
3508
1318
17
1607
8501
18
1318
9107
02
2706
3508
3508
3508
17
1318

INDEX	PART NO.	PART NAME	REC	QTY
01	1179-0309-02	CCD UNIT CCD (PWB-A)		1
02	1144-1655-01	BALL BEARING		4
03	1144-1061-01	SUPPORT PLATE		1
04	1144-1657-02	SPONGE		1
05	1144-1062-01	SUPPORT PLATE		1
06	1144-1705-01	CUSHION		2
07	1144-1650-01	HOLDER		1
08	1138-1440-01	BUSHING		2
09	1067-1404-01	PULLEY		2
10	1179-1516-01	PULLEY		1
11	1179-1622-01	TIMING BELT		1
12	1179-6113-02	MOTOR SCANNER (M1)		1
13	1179-1658-01	DUMPER		1
14	1144-1639-02	TENSION SPRING		1
15	1144-1511-01	WIRE		2
16	1144-1703-01	CUSHION		1
17	1179-2080-01	SHIELD		2
18	1144-1002-01	TOP COVER-LFT		1
19	1144-1704-01	CUSHION		1
20	1179-1580-01	PLATE SPRING		2
21	1144-1318-01	SUPPORT		1
22	1144-1649-01	HOLDER		1
23	1144-1652-01	COLLAR		1
24	1179-1607-01	SPACER		1
25	1179-1605-01	PLATE SPRING		1

INDEX	PART NO.	PART NAME	REC	QTY	SFIX

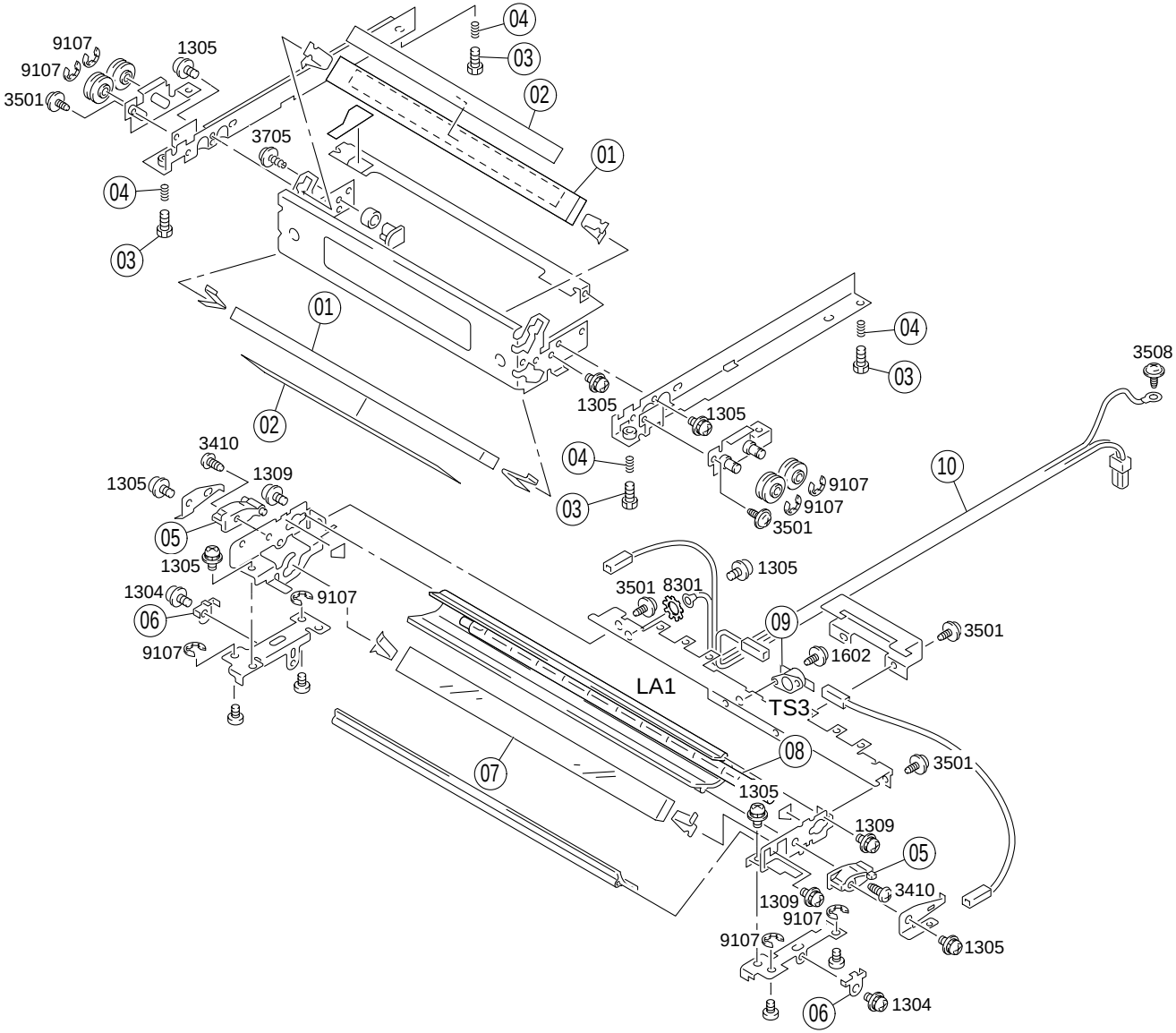
9107
9107
3501
1305
3705
04
03
02
01
3410
1309
1305
05
1304
06
LA1
TS3
07
08
09
10
3508
1602
8301

INDEX	PART NO.	PART NAME	REC	QTY	INDEX	PART NO.	PART NAME	REC	QTY
01	1179-1506-01	MIRROR		2					
02	1138-1525-01	SHEET		2					
03	1144-1421-01	BUSH		4					
04	1144-1418-01	PRESSURE SPRING		4					
05	1080-1401-03	HOLDER		2					
06	1065-1408-01	BRACKET		2					
07	1144-1505-02	MIRROR		1					
08	9351-2000-11	HALOGEN LAMP EXPOSURE (LA1)	RP	1					
09	1144-6401-02	THERMOSTAT IR SECTION (TS3)		1					
10	1144-6886-03	HARNESS		1					

INDEX	PART NO.	PART NAME	REC	QTY	SFIX

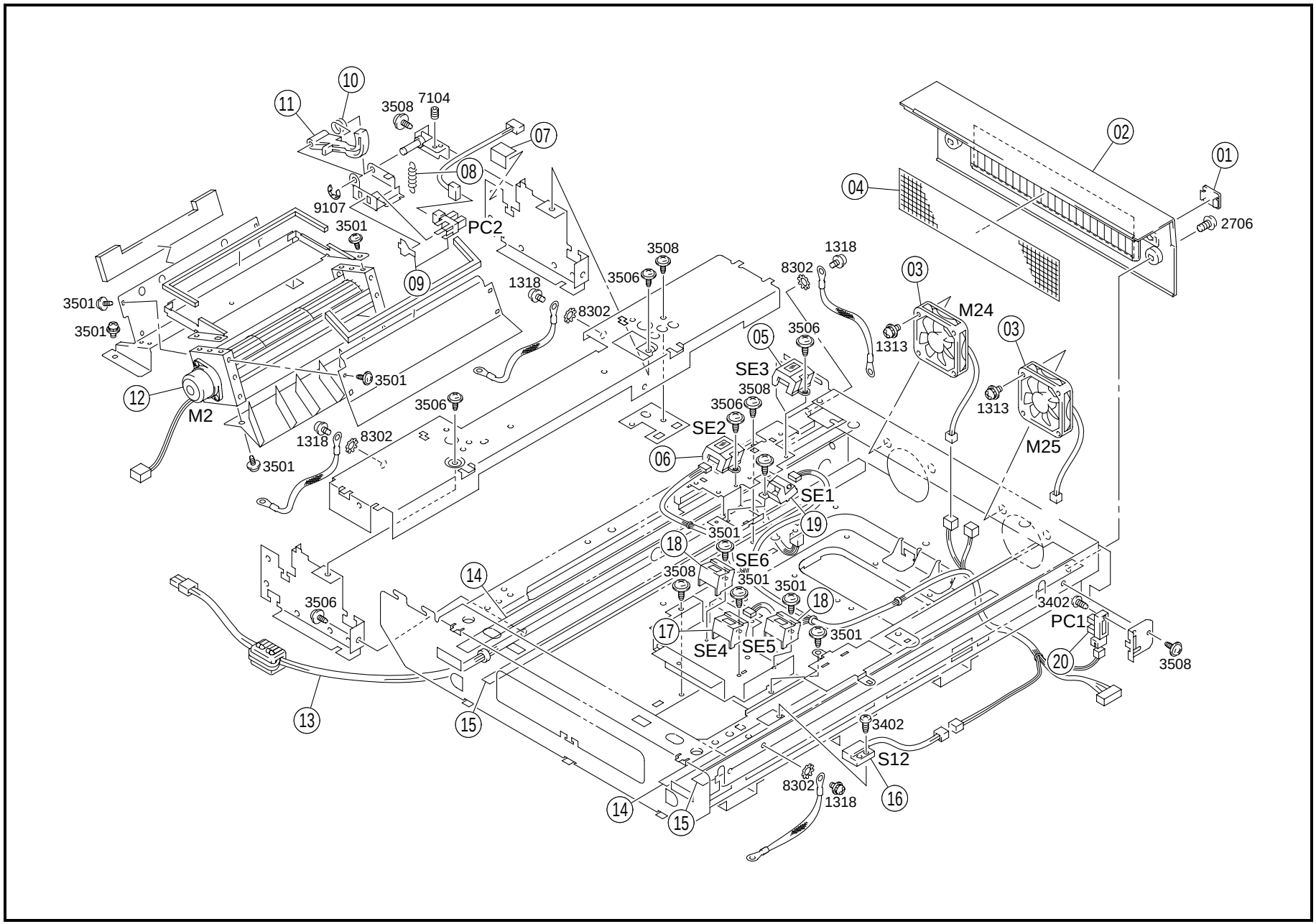
10
11
3508
7104
07
08
9107
3501
PC2
09
3501
3501
12
M2
3501
3506
1318
8302
3501
3508
3506
1318
8302
02
01
04
2706
03
M24
1313
05
3506
SE3
3508
3506
SE2
06
SE1
19
3501
18
SE6
3508
3501
3501
18
17
SE4
SE5
3501
3506
14
13
15
03
1313
M25
3402
PC1
20
3508
3402
S12
8302
1318
16
14
15

INDEX	PART NO.	PART NAME	REC	QTY
01	1139-1039-01	CAP		1
02	1144-1003-02	TOP COVER-RT		1
03	9313-1510-41	MOTOR (M24.25)		2
04	1144-1108-02	FILTER		1
05	9335-1310-11	PHOTO INTERRUPTER OPTION (SE3)		1
06	9335-1310-11	PHOTO INTERRUPTER (SE2)		1
07	1179-1604-01	SEAL		1
08	1139-1725-01	TENSION SPRING		1
09	4642-0901-01	PHOTO INTERRUPTER ANGLE (PC2)		1
10	1139-1724-01	TORSION SPRING		1
11	1139-1722-02	LEVER		1
12	9313-1710-81	MOTOR COOLING (M2)		1
13	1144-6884-03	HARNESS		1
14	1179-1501-01	SLIDER		2
15	1179-1502-01	SLIDER		2
16	9334-2610-11	REED SWITCH SIZE RESET (S12)		1
17	9335-1910-81	SOLID STATE SWITCH (SE4)		1
18	9335-1910-81	SOLID STATE SWITCH OPTION (SE5.6)		2
19	9335-1910-71	SOLID STATE SWITCH (SE1)		1
20	9335-1310-41	PHOTO INTERRUPTER POSITION (PC1)		1

INDEX	PART NO.	PART NAME	REC	QTY	SFIX

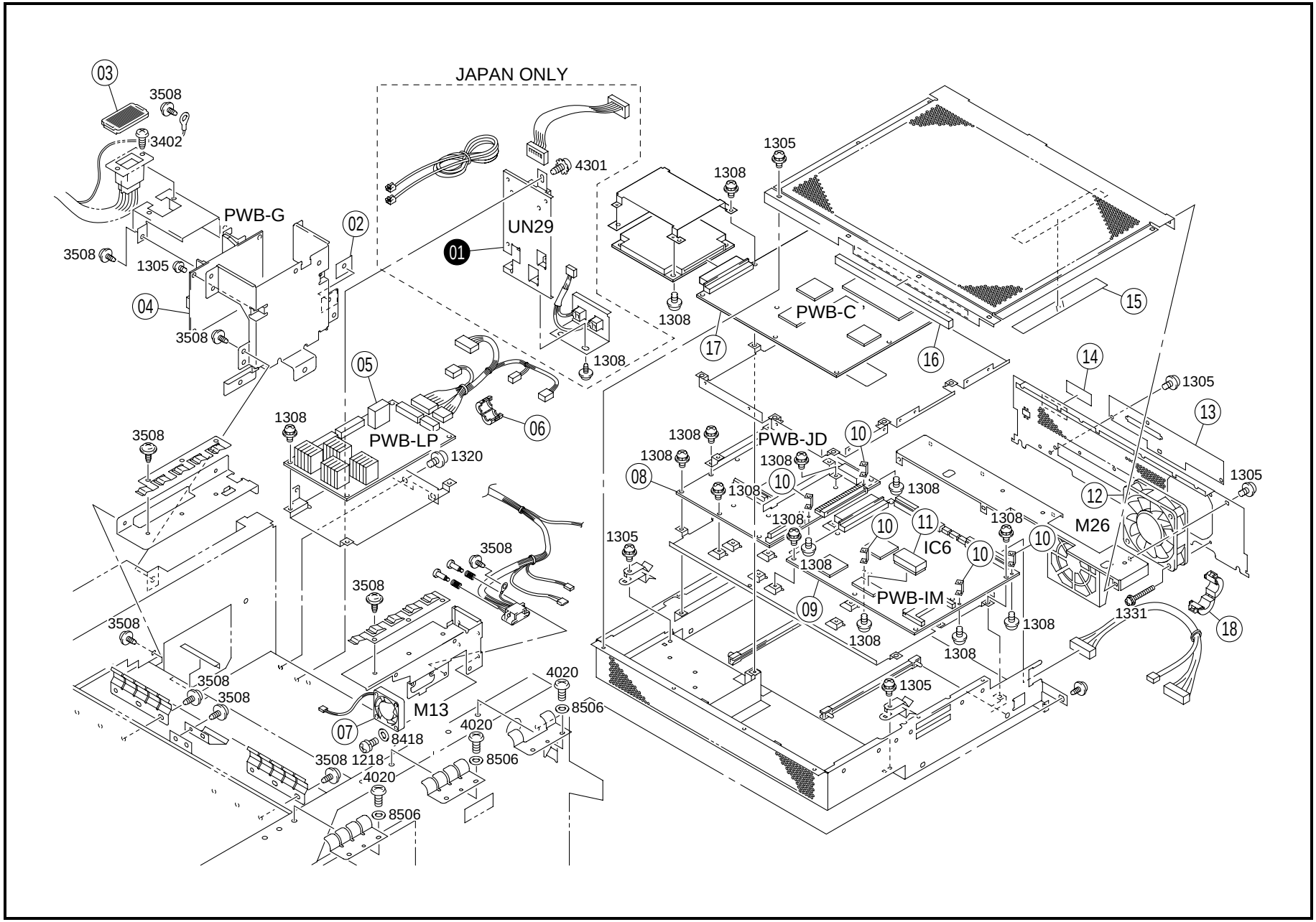
JAPAN ONLY
03
3508
3402
PWB-G
02
3508
1305
04
3508
4301
UN29
01
1308
1305
1308
PWB-C
15
17
16
14
1305
13
05
1308
PWB-LP
1320
06
3508
1308
PWB-JD
10
1308
1308
08
1308
10
1308
1305
12
1308
11
1308
M26
1305
10
IC6
10
10
3508
1308
3508
PWB-IM
09
1308
1331
18
3508
1308
1308
3508
3508
4020
1305
M13
8506
07
8418
4020
3508
1218
8506
4020
8506

INDEX	PART NO.	PART NAME	REC	QTY	INDEX	PART NO.	PART NAME	REC	QTY
02	1154-2420-01	CUSHION		1					
03	9384-2310-41	COVER		1					
04	1179-0113-03	PWB ASSY SCP (PWB-G)	RP	1					
05	1179-0115-02	PWB ASSY PHC (PWB-LP)	RP	1					
06	9326-1000-91	FERRITE CORE		1					
07	9313-1000-21	FAN MOTOR PH COOLING (M13)		1					
08	1179-0120-02	PWB ASSY PH (PWB-JD)	RP	1					
09	1179-0111-03	PWB ASSY MASTER (PWB-IM)	RP	1					
10	1179-1682-01	BRACKET		5					
11	9367-4510-31	IC (IC6)		1					
12	9313-1000-11	FAN MOTOR MXE COOLING (M26)		1					
13	1179-2415-01	SHIELD BOX		1					
14	1179-7301-01	LABEL		1					
15	1179-2465-01	SHIELD		1					
16	1179-2463-01	SHIELD		1					
17	1179-0103-04	PWB ASSY IR (PWB-C)	RP	1					
18	9326-1410-31	FERRITE CORE		1					

INDEX	PART NO.	PART NAME	REC	QTY	SFIX
01	1144-6084-01	PW BOARD (UN29)		1	011

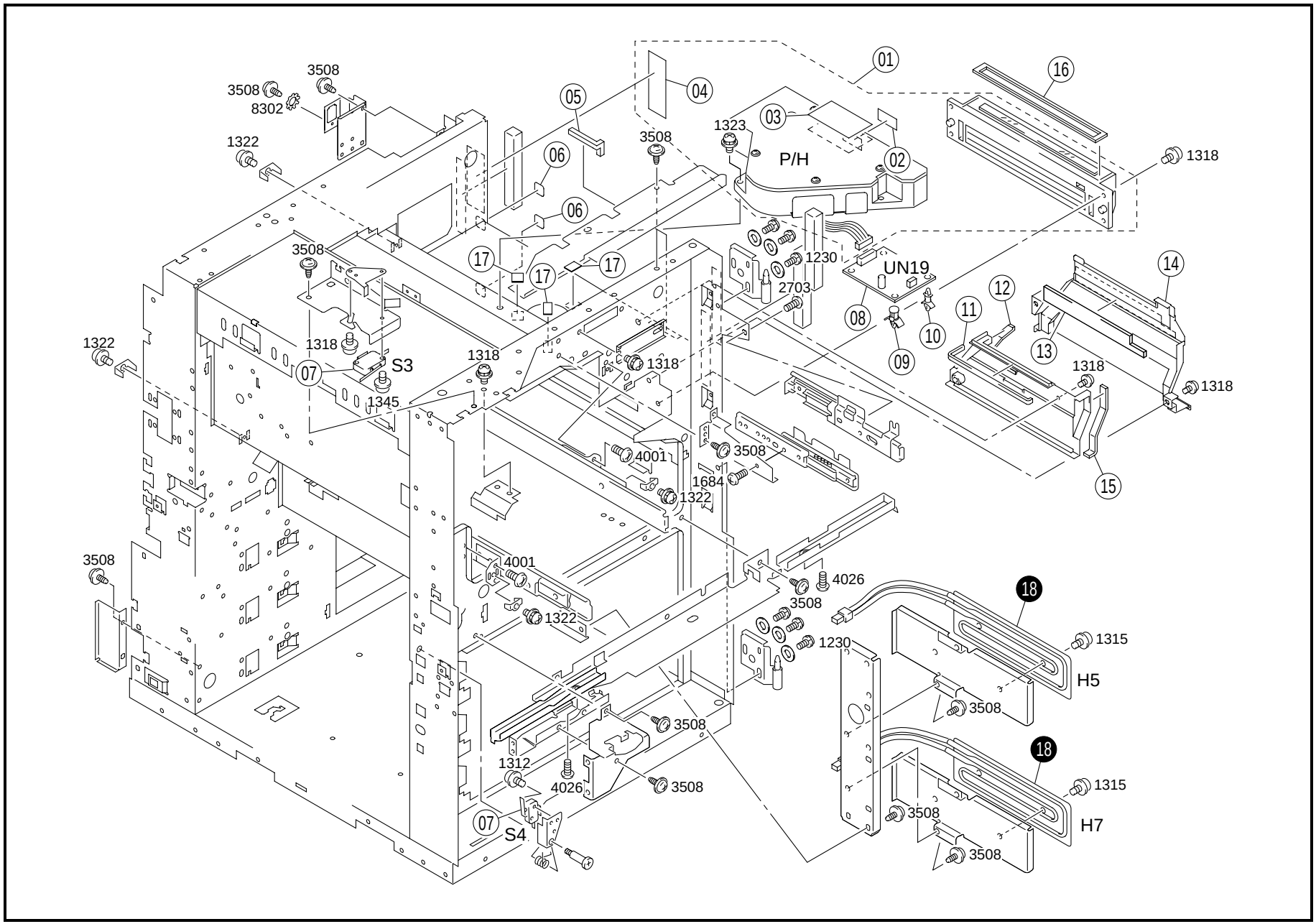
01
02
03
04
05
06
06
07
07
08
09
10
11
12
13
14
15
16
17
17
17
18
18
P/H
UN19
S3
S4
H5
H7
3508
3508
8302
1322
3508
1323
1318
1230
2703
1318
1318
1318
1318
1318
1345
1322
4001
3508
1684
1322
3508
4001
4026
3508
1322
1230
1315
3508
3508
1312
4026
3508
1315
3508
3508

INDEX	PART NO.	PART NAME	REC	QTY	INDEX	PART NO.	PART NAME	REC	QTY
01	1179-0531-04	P/H ASSY		1					
02	1179-7305-01	LABEL		1					
03	1179-7304-01	LABEL		1					
04	1179-7303-02	LABEL		1					
05	1179-2091-01	SEAL		1					
06	1052-7257-01	LABEL YELLOW		2					
07	9331-2710-11	MICRO SWITCH (S3.4)		2					
08	1179-6061-01	PWB ASSY (UN19)		1					
09	9384-1900-55	PWB SUPPORT 9.53H		1					
10	9384-1900-57	PWB SUPPORT 9.53H		3					
11	1154-2092-01	SPONGE		1					
12	1179-2094-01	SEAL		1					
13	1154-2090-01	SPONGE		1					
14	1144-2028-15	COVER		1					
15	1179-2093-01	SEAL		1					
16	1179-2087-01	SEAL		1					
17	1179-2009-01	INSTRUCTIONS		3					

INDEX	PART NO.	PART NAME	REC	QTY	SFIX
18	1144-6525-01	HEATER (H5.7)		2	311, 313
18	9352-6410-11	HEATER (H5.7)		2	011
18	9352-6510-21	HEATER (H5.7)		2	211

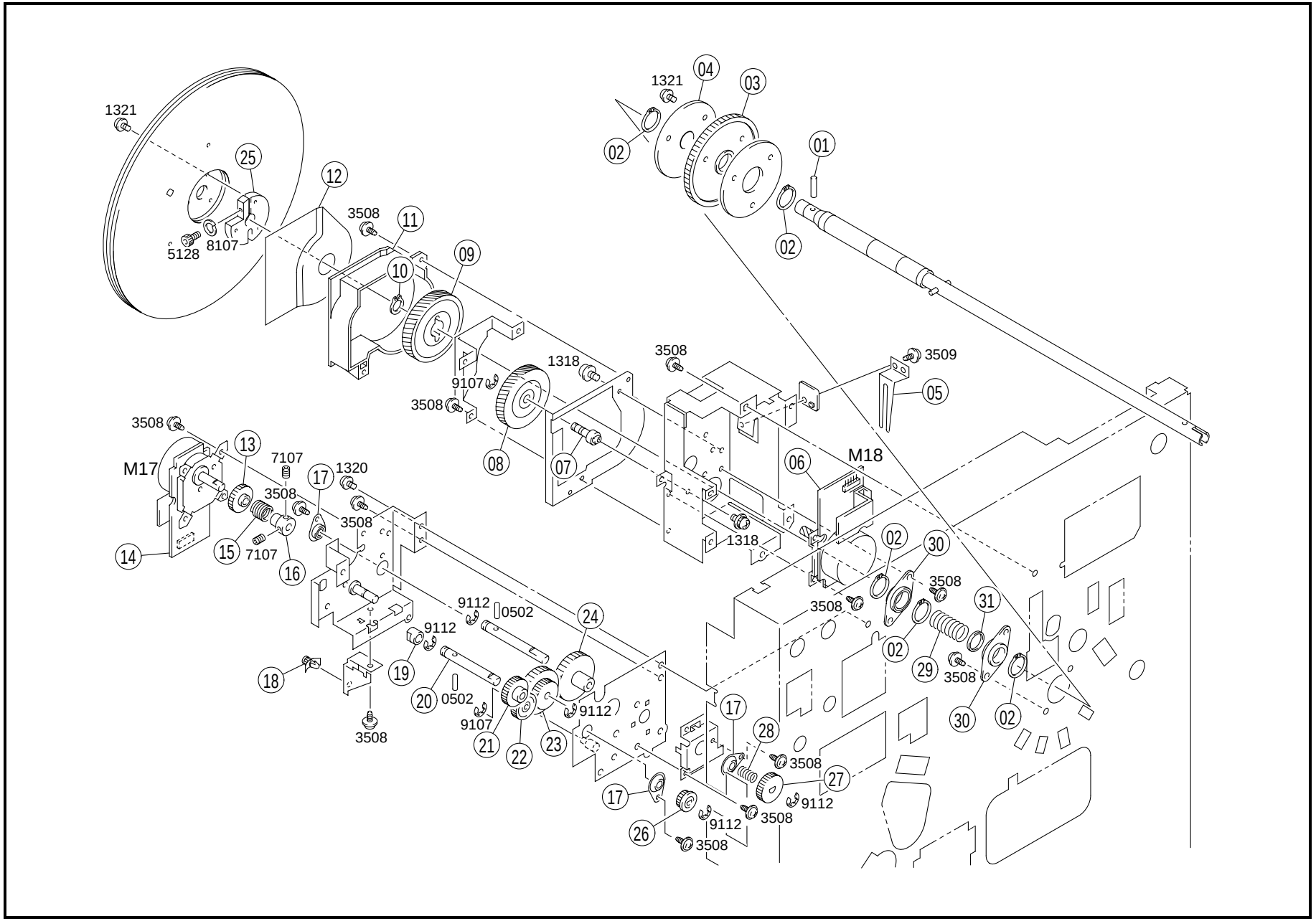
1321
25
12
3508
11
5128
8107
10
09
1321
04
03
02
01
02
3508
1318
3509
9107
05
3508
08
07
06
M18
3508
13
M17
7107
17
1320
3508
3508
14
15
7107
16
1318
02
30
3508
3508
31
9112
0502
24
9112
02
29
3508
18
19
20
0502
9112
30
02
9107
17
28
3508
21
22
23
3508
27
17
9112
26
9112
3508
3508

INDEX	PART NO.	PART NAME	REC	QTY
01	1144-2504-12	PIN		1
02	1500-2610-03	C-RING		5
03	1179-2034-01	GEAR		1
04	1154-2076-01	HOLDER		1
05	1076-2541-01	GROUND PLATE		1
06	1154-6114-01	MOTOR DRIVE (M18)		1
07	1144-2508-01	SHAFT		1
08	1144-2511-01	GEAR 20/132T		1
09	1144-2506-14	GEAR 100T		1
10	1500-2610-15	C-RING		1
11	1154-2597-01	HOUSING		1
12	1154-2598-01	SEAL		1
13	1144-2576-02	GEAR 27T		1
14	1154-6113-01	MOTOR FUSING (M17)		1
15	1144-2584-01	CLUTCH SPRING		1
16	1061-5707-01	ARBOR		1
17	1039-3623-01	BUSHING		3
18	9384-1621-21	PWB SUPPORT 6.4H		1
19	1200-3134-16	BUSHING		1
20	1144-2592-01	SHAFT		1
21	1144-2594-01	GEAR 30T		1
22	1300-3342-35	GEAR 28T		1
23	1144-2577-01	GEAR 31/47T		1
24	1144-2578-01	GEAR 56T		1
25	1154-2509-01	HOLDER		1
26	1144-2595-01	GEAR 20T		1
27	1144-2579-01	GEAR 30T		1
28	1400-1163-08	PRESSURE SPRING		1
29	1154-2033-01	PRESSURE SPRING		1
30	1154-2084-01	BUSHING		2
31	1154-2083-01	COLLAR		1

INDEX	PART NO.	PART NAME	REC	QTY	SFIX

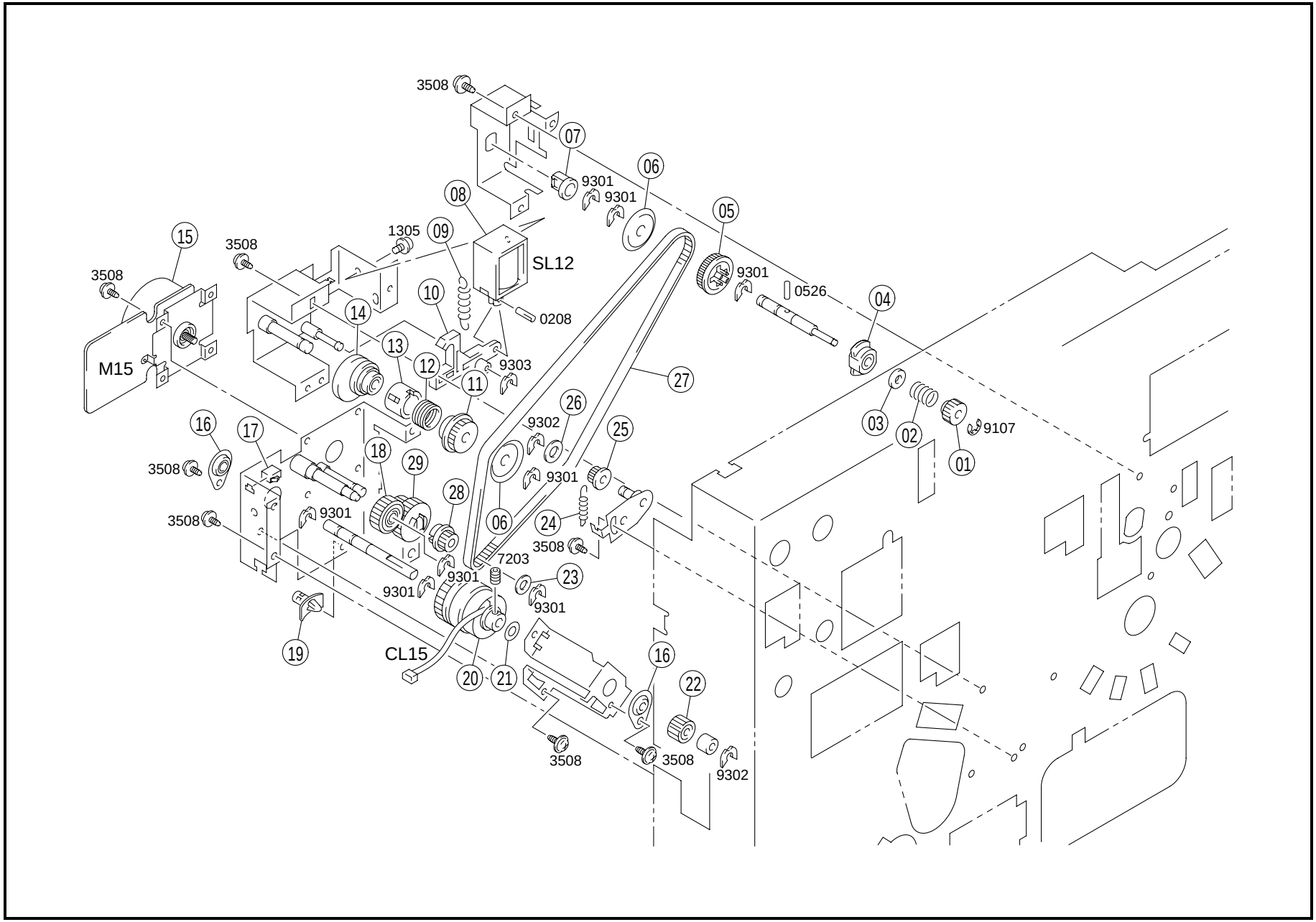
3508
07
06
9301
9301
08
05
1305
09
15
3508
SL12
3508
9301
0526
04
10
14
0208
13
12
9303
M15
11
27
26
03
9107
16
17
9302
25
02
01
18
29
3508
9301
28
3508
9301
06
24
3508
7203
23
9301
9301
9301
19
CL15
16
20
21
22
3508
3508
9302

INDEX	PART NO.	PART NAME	REC	QTY
01	1300-3222-60	GEAR 17T		1
02	1400-1165-09	PRESSURE SPRING		1
03	1200-1541-09	WASHER		1
04	1054-4339-01	BUSHING		1
05	1144-2501-01	PULLEY 44T		1
06	1074-3986-01	FRANGE		2
07	1200-3234-17	BUSHING		1
08	9321-2710-52	SOLENOID TRANSFER (SL12)		1
09	1144-2536-01	TENSION SPRING		1
10	1061-2553-01	PAWL		1
11	1144-2532-02	PULLEY 40T		1
12	1144-2535-02	CLUTCH SPRING		1
13	1061-2564-01	RATCHET		1
14	1144-2537-02	CAM		1
15	1154-6111-01	MOTOR TAKE-UP (M15)		1
16	1039-3623-01	BUSHING		2
17	9383-2210-11	CONNECTOR 2P		1
18	1144-2517-01	GEAR 25T		1
19	9384-1621-21	PWB SUPPORT 6.4H		1
20	9322-1510-52	CLUTCH TRANSPORT (CL15)	RP	1
21	1200-1462-01	WASHER		1
22	1144-2518-01	GEAR 17T		1
23	1200-1566-04	WASHER		1
24	1400-2341-06	TENSION SPRING		1
25	1067-2566-01	PULLEY 18T		1
26	1200-1646-03	WASHER		1
27	1144-2546-01	TIMING BELT		1
28	1144-2545-01	PULLEY 22T		1
29	1144-2516-02	GEAR		1

INDEX	PART NO.	PART NAME	REC	QTY	SFIX

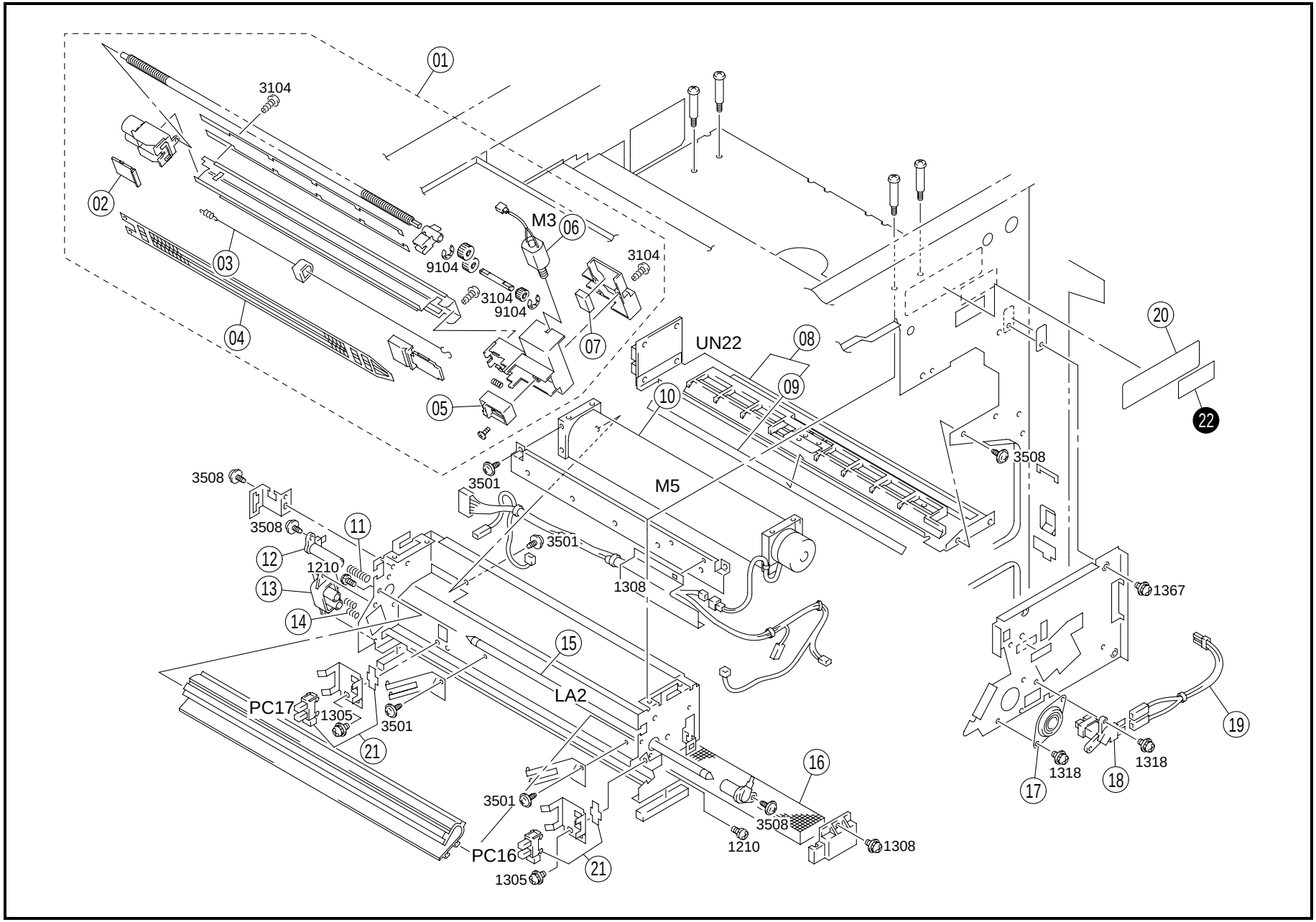
01
3104
02
03
04
M3
06
9104
3104
9104
3104
07
05
UN22
08
09
10
20
22
3508
3501
M5
3508
3508
11
12
1210
13
14
3501
1308
1367
15
LA2
PC17
1305
3501
21
16
3501
3508
1210
1308
PC16
21
1305
17
1318
18
1318
19

INDEX	PART NO.	PART NAME	REC	QTY
01	1154-0328-07	DRUM CHARGE UNIT	RP	1
02	1144-4004-01	COVER		1
03	1154-0757-01	CORONA WIRE	RP	1
04	1144-4020-01	GRID	RP	1
05	1038-4903-02	HOLDER		1
06	9312-1821-81	MOTOR CLEANING (M3)		1
07	1144-4023-01	SPONGE		1
08	1179-0751-01	PWB-DETECTING ASSY (UN22)	RP	1
09	1144-2044-01	POLYESTER FILM	RP	1
10	9313-1910-21	FAN MOTOR OZONE (M5)		1
11	1400-1154-03	PRESSURE SPRING		1
12	1038-4909-01	HOLDER		1
13	1144-4015-01	HOLDER		1
14	1076-4006-01	PRESSURE SPRING		2
15	9351-1010-41	TUBE LAMP MAIN ERASE (LA2)	RP	1
16	1144-4013-01	OZONE FILTER	RP	1
17	1131-4074-01	BUSHING		1
18	1144-0151-02	TERMINAL BLOCK	RP	1
19	1144-6831-01	HARNESS		1
20	1179-7302-01	LABEL		1
21	4641-0901-01	SOLID STATE SWITCH (PC16.17)		2
22	1144-7366-01	LABEL PLEASE DO NOT		1

SFIX: 211

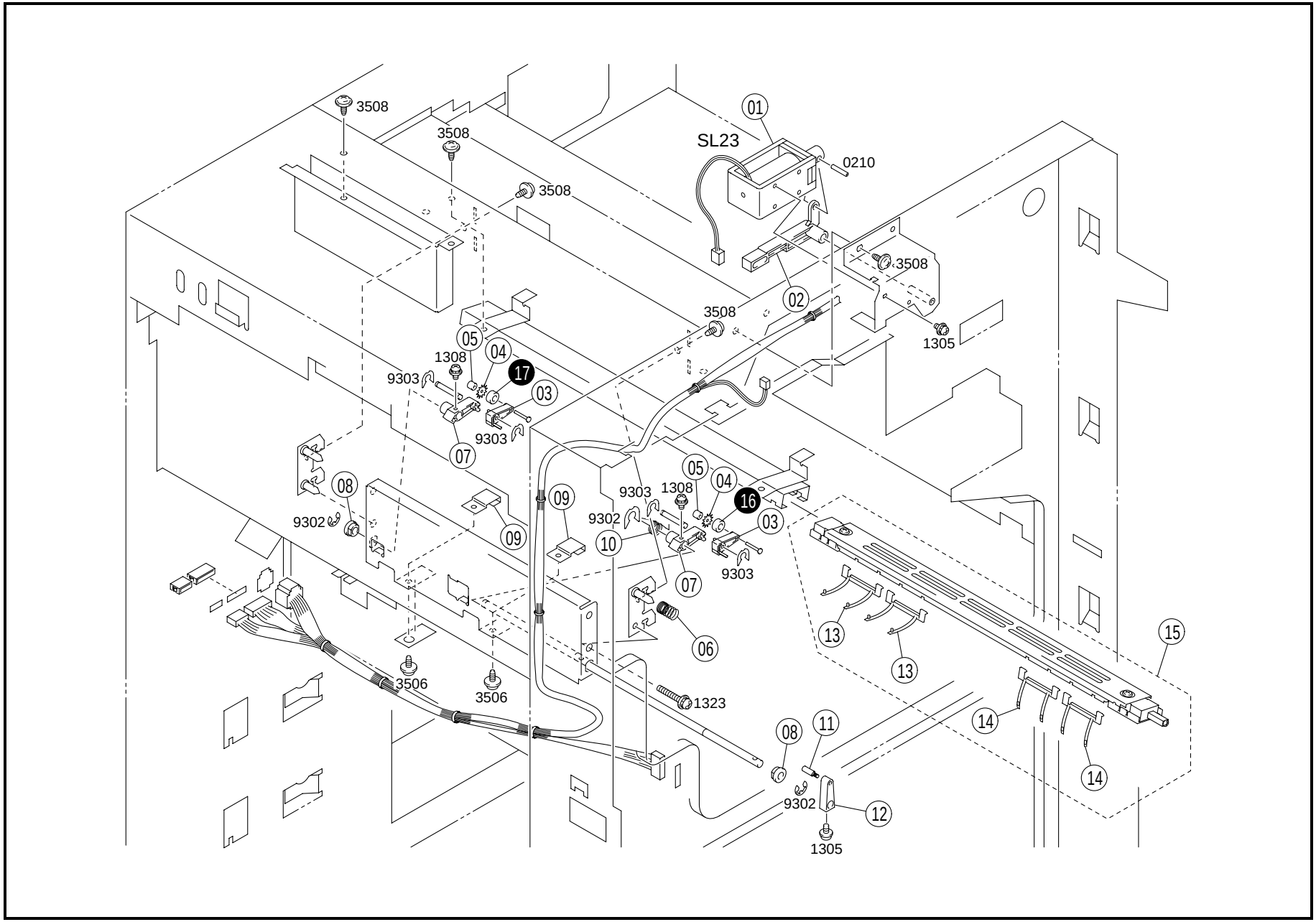
3508
3508
3508
01
SL23
0210
3508
3508
02
1305
05
04
1308
17
9303
03
9303
07
08
9302
09
09
9303
1308
05
04
16
9302
10
03
9303
07
06
13
13
15
3506
3506
1323
08
11
14
14
9302
12
1305

INDEX	PART NO.	PART NAME	REC	QTY	INDEX	PART NO.	PART NAME	REC	QTY
01	9321-2110-11	SOLENOID HOLDING (SL23)		1					
02	1154-4954-01	LEVER		1					
03	1154-4952-02	HOLDER		2					
04	1154-4951-01	GUIDE		2					
05	1200-2105-05	COLLAR		2					
06	1154-4955-02	PRESSUER SPRING		1					
07	1154-4967-01	LEVER		2					
08	1200-3221-07	BUSHING		2					
09	1154-4971-01	REGULATING PLATE		2					
10	1154-4963-01	TORSION SPRING		1					
11	1100-1202-03	SHOULDER SCREW		1					
12	1154-4969-01	LEVER		1					
13	1154-4917-01	GUIDE		2					
14	1154-4918-01	GUIDE		2					
15	1154-0360-01	SEP CORONA	RP	1					

INDEX	PART NO.	PART NAME	REC	QTY	SFIX
16	1154-4966-01	SPACER		1	211, 313
17	1154-4966-01	SPACER		1	011, 311

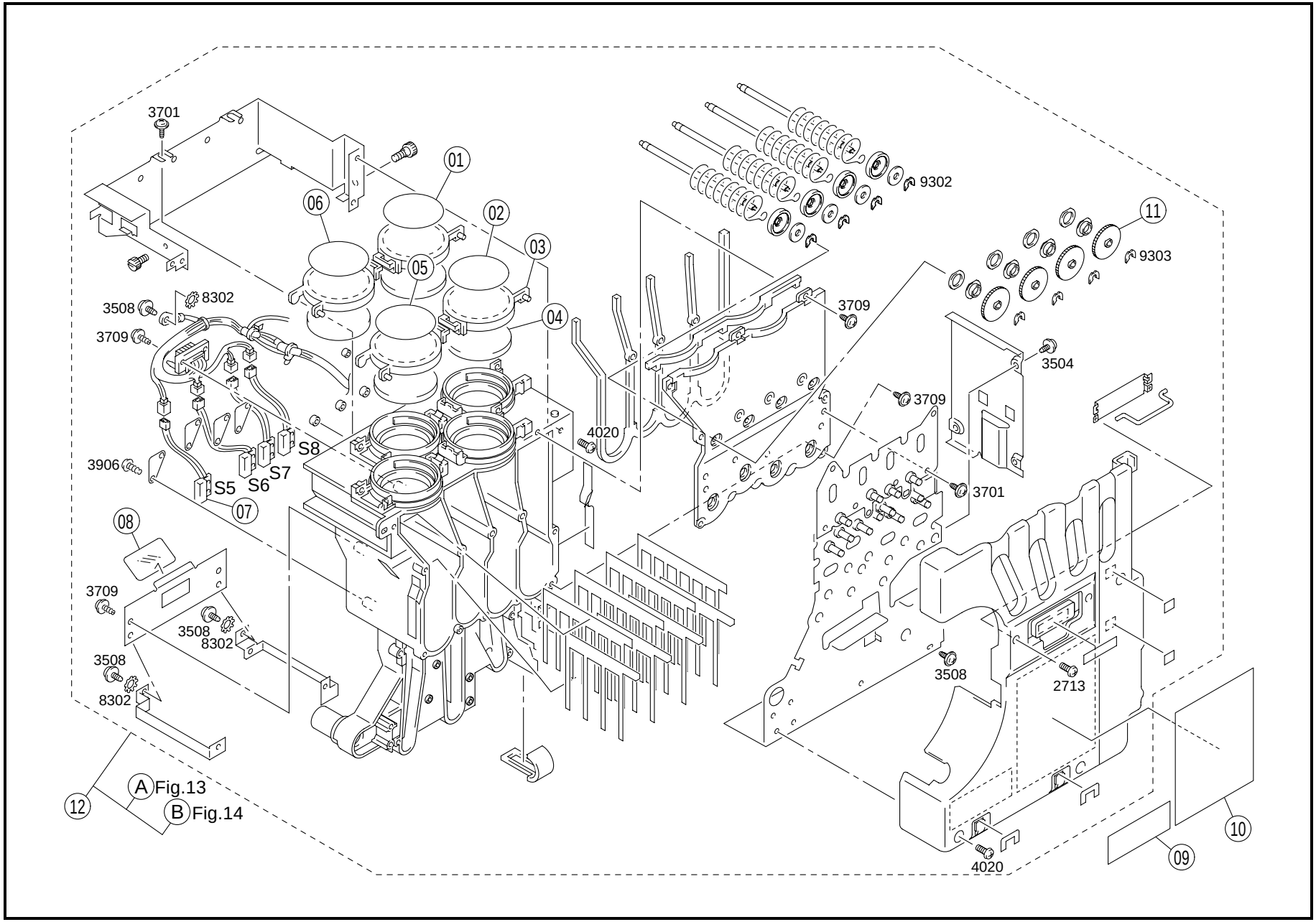
3701
01
06
02
03
05
04
9302
11
9303
3508
8302
3709
3709
3504
4020
3709
3906
S8
S7
S5
S6
07
3701
08
3709
3508
8302
3508
8302
3508
2713
A Fig.13
B Fig.14
12
10
09
4020

INDEX	PART NO.	PART NAME	REC	QTY	INDEX	PART NO.	PART NAME	REC	QTY
01	1144-7305-02	LABEL BRACK		1					
02	1144-7304-03	LABEL YERROW		1					
03	1144-5420-03	LID		4					
04	1144-5422-01	SEAL		4					
05	1144-7303-02	LABEL CYAN		1					
06	1144-7302-02	LABEL MAGENTA		1					
07	9334-2810-11	SWITCH (S5.6.7.8)		4					
08	1154-5434-01	SEAL		1					
09	1179-7302-01	LABEL		1					
10	1179-7317-01	LABEL		1					
11	1179-5450-01	GEAR		4					
12	1179-0346-01	HOPPER UNIT	RP	1					

INDEX	PART NO.	PART NAME	REC	QTY	SFIX

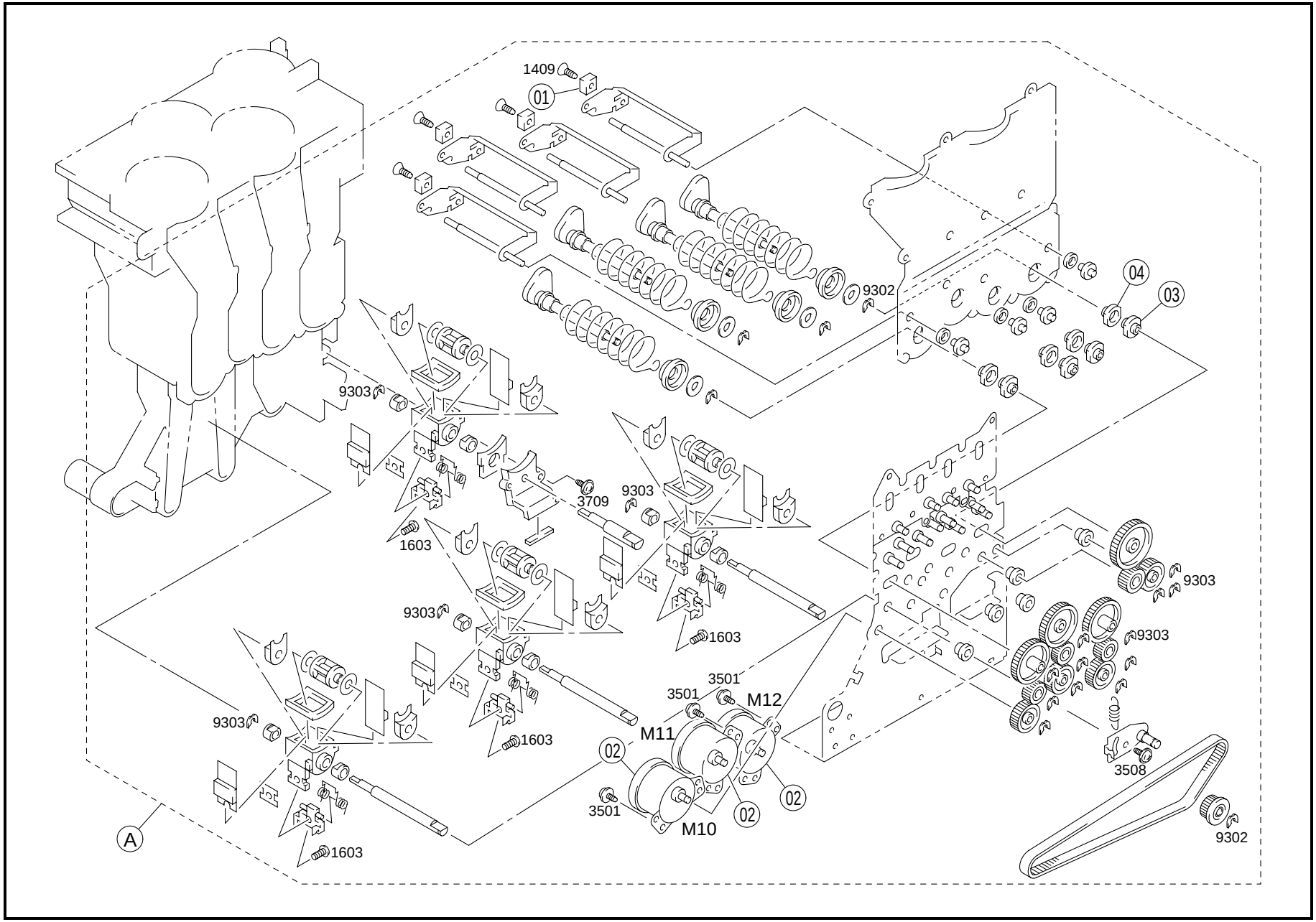
1409
01
9302
04
03
9303
3709
1603
M12
3501
M11
02
M10
3508
A

INDEX	PART NO.	PART NAME	REC	QTY
01	9326-2900-06	MAGNET		4
02	9312-1310-71	MOTOR (M10.11.12)		3
03	1144-5318-01	BUSHING		4
04	1144-5313-02	SPONGE		4

INDEX	PART NO.	PART NAME	REC

INDEX	PART NO.	PART NAME	REC	QTY

INDEX	PART NO.	PART NAME	REC	QTY	SFIX

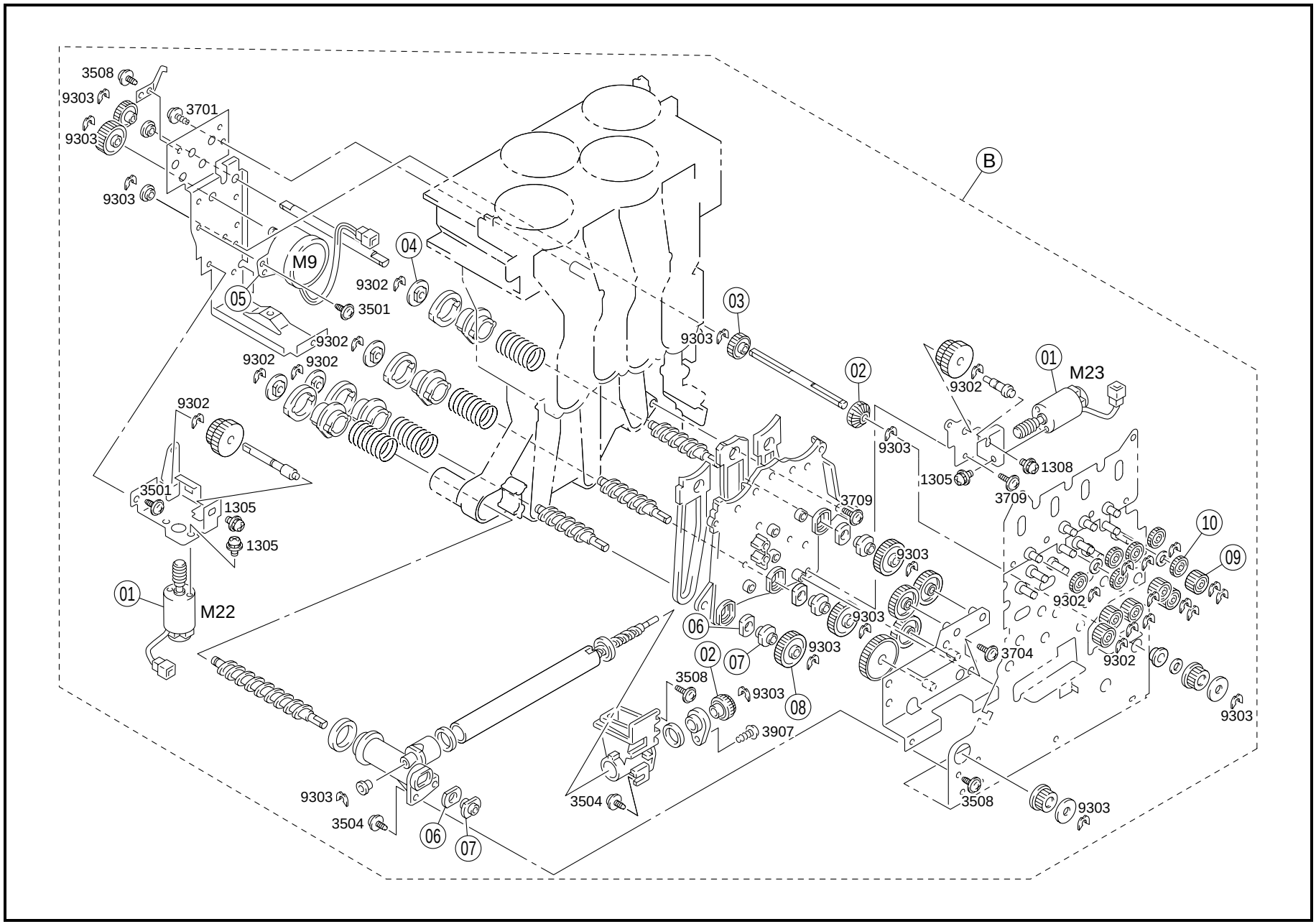
3508
9303
3701
9303
9303
B
M9
04
9302
05
3501
03
9303
9302
9302
9302
02
01
M23
9302
9302
9303
1308
1305
3709
3709
3501
1305
1305
10
09
9303
01
M22
9302
9303
06
9303
3704
02
07
9302
3508
9303
08
9303
3907
9303
3504
3504
3508
9303
06
07

INDEX	PART NO.	PART NAME	REC	QTY	INDEX	PART NO.	PART NAME	REC	QTY
01	9312-1510-53	MOTOR (M22.23)		2					
02	1139-5730-01	GEAR 18T		2					
03	1300-3222-37	GEAR 18T		1					
04	1144-5457-02	BUSHING		4					
05	9312-1310-71	MOTOR (M9)		1					
06	1144-5313-02	SPONGE		4					
07	1144-5318-01	BUSHING		4					
08	1300-3142-04	GEAR 26T		3					
09	1144-5452-01	GEAR 26T		6					
10	1144-5451-01	GEAR 26T		6					

INDEX	PART NO.	PART NAME	REC	QTY	SFIX

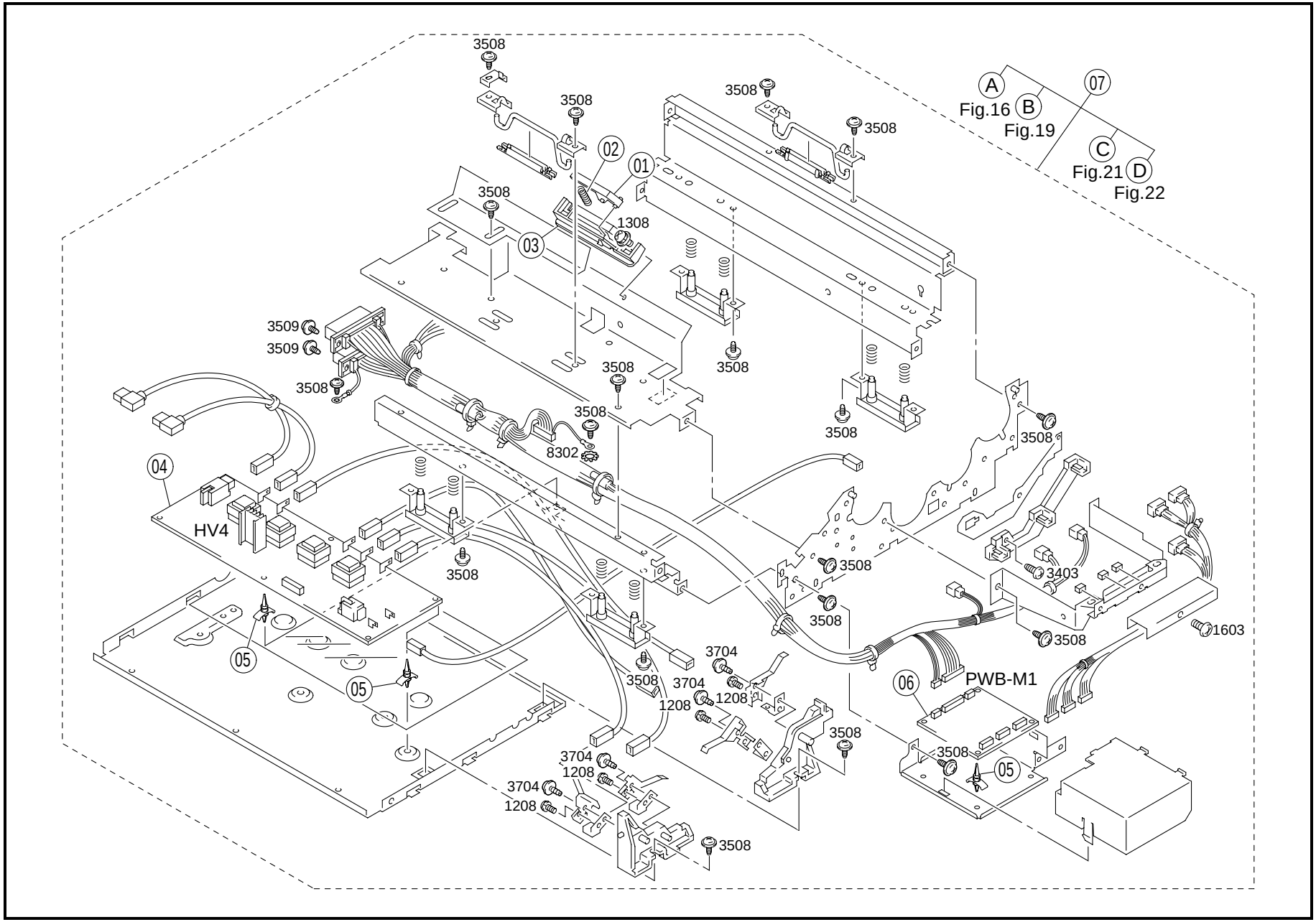
3508
3508
3508
3508
3508
A
Fig.16
B
Fig.19
07
C
Fig.21
D
Fig.22
02
01
1308
03
3509
3509
3508
3508
3508
3508
3508
3508
8302
04
HV4
3508
3508
3403
3508
3508
1603
05
05
3704
3508
3704
1208
1208
06
PWB-M1
3508
3508
3704
1208
3704
1208
05
3508

INDEX	PART NO.	PART NAME	REC	QTY	INDEX	PART NO.	PART NAME	REC	QTY
01	1179-4455-01	GUIDE		1					
02	1179-4457-01	PRESSURE SPRING		1					
03	1179-4446-01	COVER		1					
04	1179-6214-01	HV TRANSFORMER (HV4)	RP	1					
05	9384-1900-56	PWB SUPPORT 6.35H		10					
06	1154-0115-02	PW BOARD-MI AUTO ADJ (PWB-M1)	RP	1					
07	1179-0311-03	DEVELOPNG UNIT		1					

INDEX	PART NO.	PART NAME	REC	QTY	SFIX

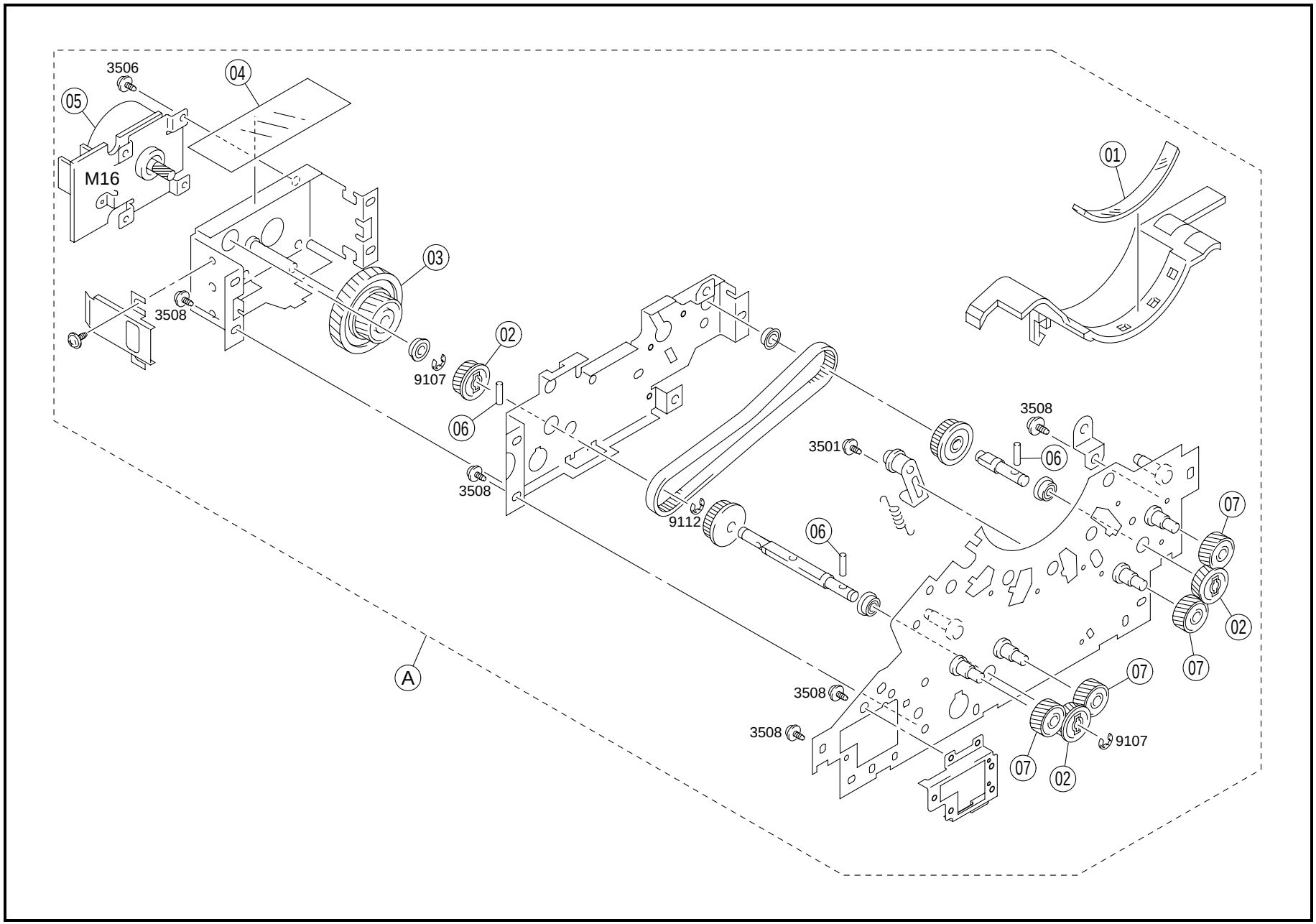
3506
04
05
M16
03
3508
9107
02
06
3508
01
3508
3501
06
9112
06
07
02
07
3508
07
3508
9107
07
02
A

INDEX	PART NO.	PART NAME	REC	QTY	INDEX	PART NO.	PART NAME	REC	QTY
01	1144-5118-02	SPONGE		1					
02	1179-5207-01	GEAR		3					
03	1179-5123-01	GEAR		1					
04	1179-5132-01	COVER		1					
05	9314-2810-31	MOTOR DEVELOPING (M16)		1					
06	1144-5200-01	PIN		3					
07	1179-5206-01	GEAR		4					

INDEX	PART NO.	PART NAME	REC	QTY	SFIX

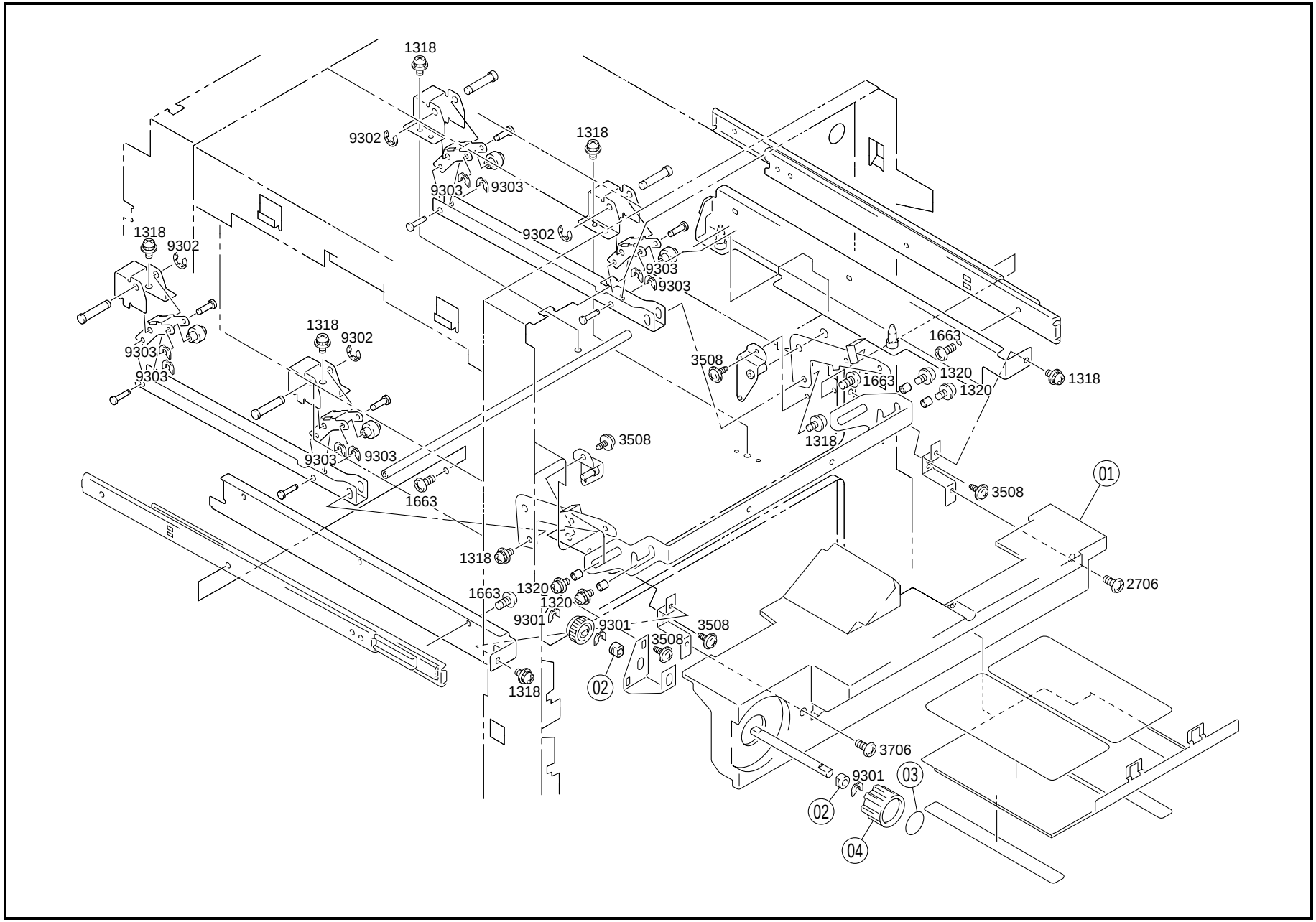
1318
9302
1318
9303
9303
9302
1318
9302
9303
9303
1318
9302
9303
9303
3508
1663
1320
1663
1320
1318
1318
3508
9303
9303
1663
01
3508
1318
2706
1663
1320
1320
9301
9301
3508
3508
02
1318
3706
9301
03
02
04

INDEX	PART NO.	PART NAME	REC	QTY	INDEX	PART NO.	PART NAME	REC	QTY
01	1144-2040-14	COVER		1					
02	1200-3131-03	BUSHING		2					
03	1144-7326-01	LABEL M1		1					
04	1144-3080-01	KNOB		1					

INDEX	PART NO.	PART NAME	REC	QTY	SFIX

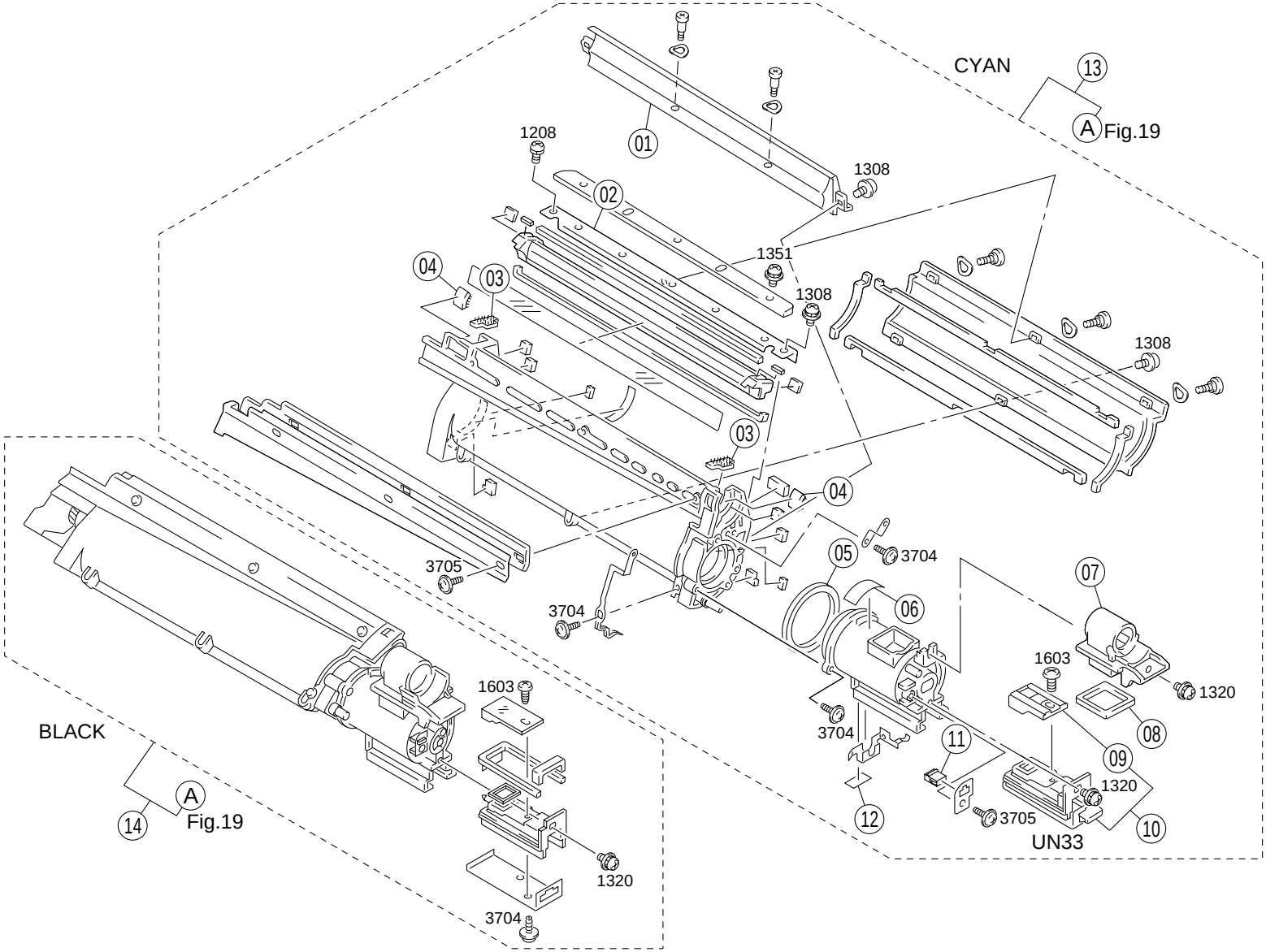
CYAN
13
A Fig.19
01
1208
1308
02
1351
04
03
1308
1308
03
04
05
3704
07
3705
3704
06
1603
1320
1603
08
BLACK
3704
11
09
1320
A
14
Fig.19
12
3705
10
UN33
1320
3704

INDEX	PART NO.	PART NAME			REC	QTY
01	1144-0757-01	REGULATING PLATE			RP	2
02	1154-5003-02	BRACKET				2
03	1144-5012-01	MAT				4
04	1144-5019-01	MAT				4
05	1144-5066-01	SEAL				2
06	1144-5095-02	POLYESTER FILM				2
07	1144-5020-02	JOINT				2
08	1144-5068-01	SPONGE				2
09	1179-0170-01	CAP ASSY	CYAN		RP	1
10	1179-0128-01	PWB ASSY	CYAN	(UN33)	RP	1
11	9383-2210-11	CONNECTOR 2P				2
12	1179-5085-01	SEAL				2
13	1179-0316-02	DEVELOPING UNIT	CYAN		RP	1
14	1179-0319-02	DEVELOPING UNIT	BLACK		RP	1

INDEX	PART NO.	PART NAME	REC	QTY	SFIX

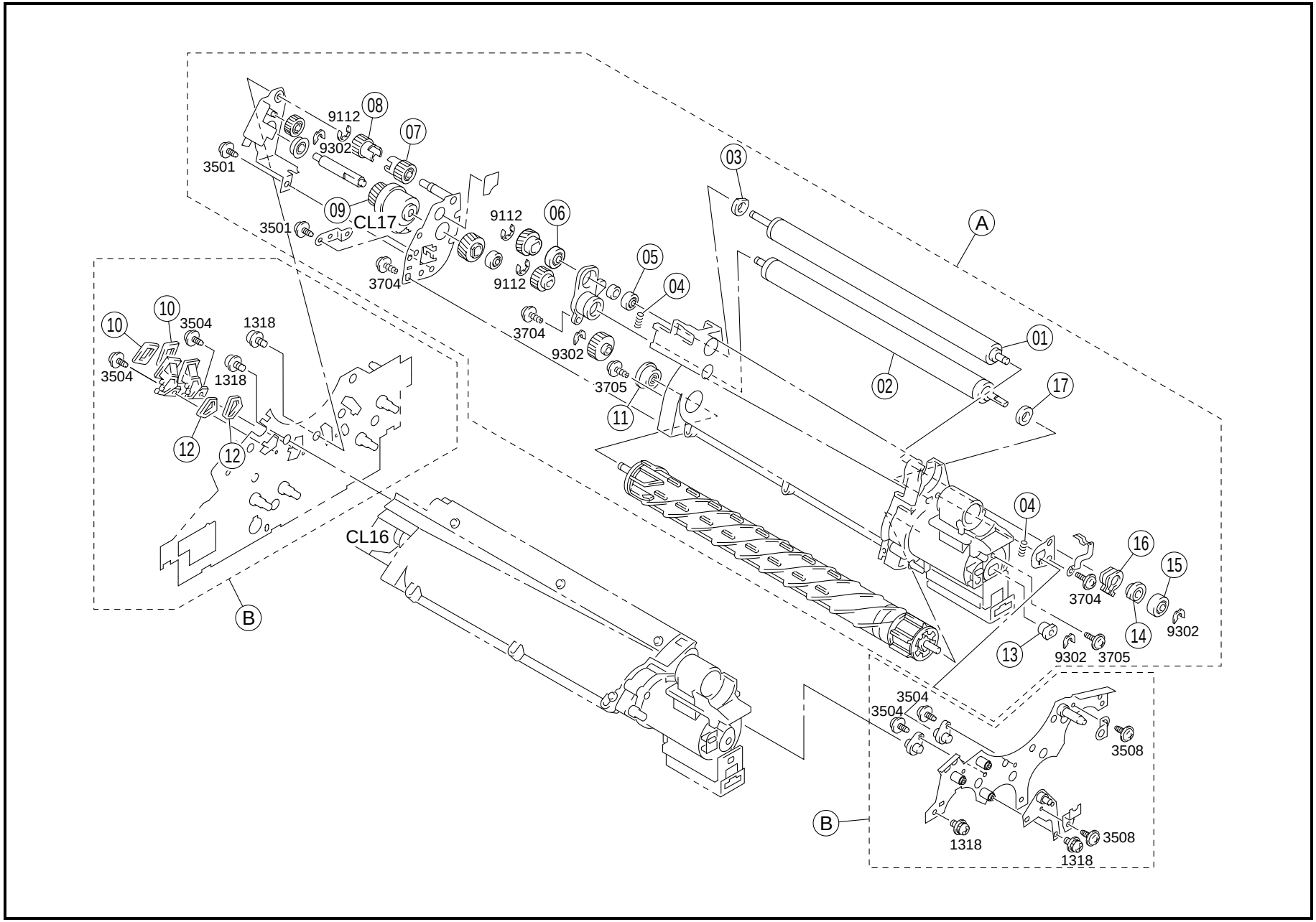
08
9112
9302
07
3501
09
CL17
3501
9112
06
3704
9112
05
04
3704
9302
3705
11
03
A
01
02
17
10
10
3504
1318
3504
1318
12
12
CL16
B
04
16
15
3704
14
9302
13
9302
3705
3504
3504
3508
B
1318
3508
1318

INDEX	PART NO.	PART NAME	REC	QTY	INDEX	PART NO.	PART NAME	REC	QTY
01	1144-5001-01	MAGNET ROLLER		2					
02	1144-5010-01	MAGNET ROLLER		2					
03	1139-5211-01	SPONGE		2					
04	1400-1226-03	PRESSURE SPRING		4					
05	1139-5246-01	BALL BEARING		2					
06	1154-5060-01	DS COLLAR	RP	2					
07	1179-5040-01	GEAR		2					
08	1144-5040-01	GEAR 15T		2					
09	9322-1000-11	CLUTCH (CL16.17)	RP	2					
10	1144-5139-01	SPONGE		2					
11	1144-0169-01	BUSHING	RP	2					
12	1144-5143-02	SPONGE		2					
13	1065-5106-01	BUSHING	RP	2					
14	1144-5006-01	BUSHING		2					
15	1144-5008-01	ROLL	RP	2					
16	1144-0753-01	BUSHING-FNT		2					
17	1139-5205-01	SPONGE		2					

INDEX	PART NO.	PART NAME	REC	QTY	SFIX

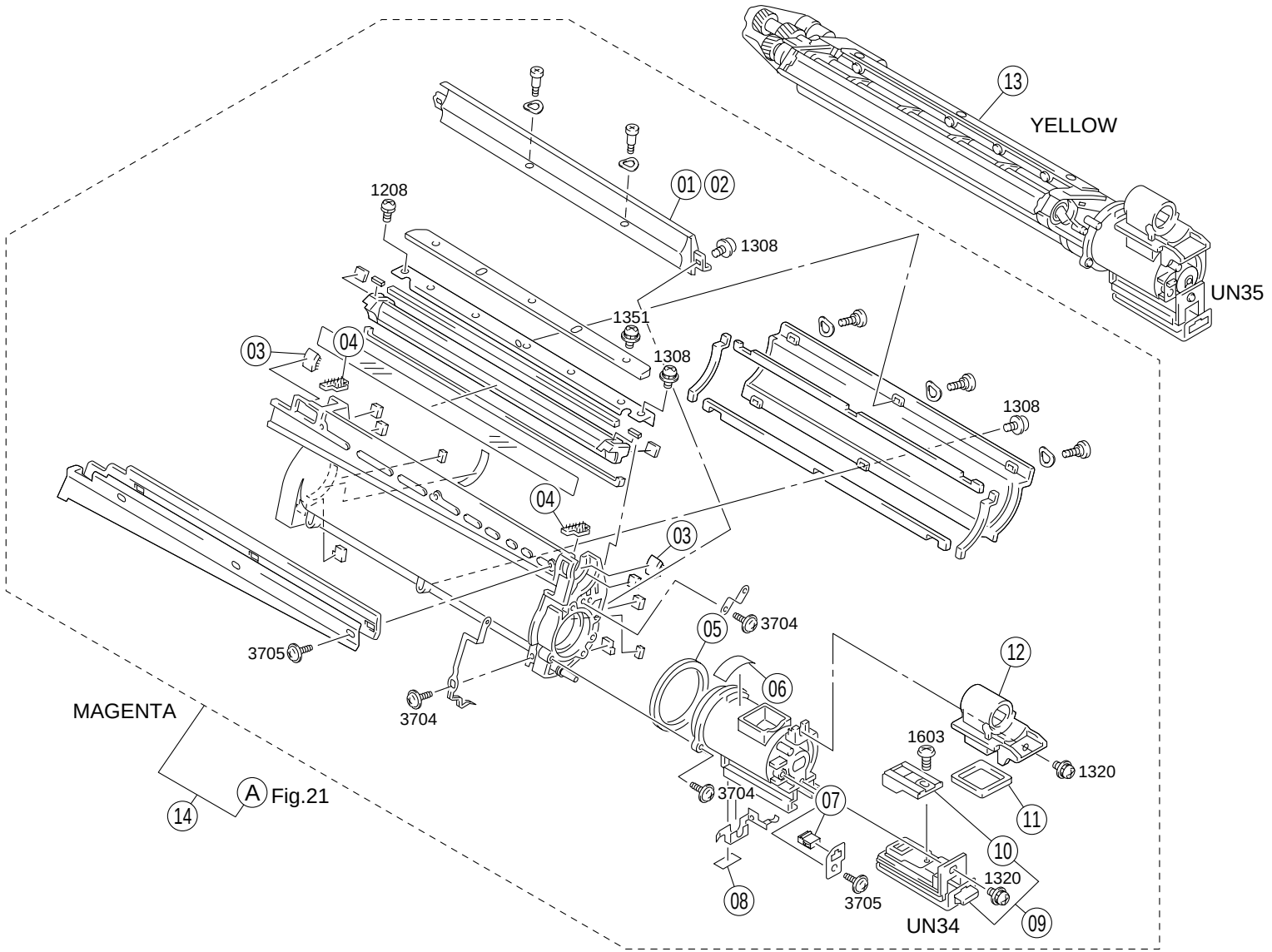
13
YELLOW
UN35
01
02
1208
1308
1351
1308
1308
03
04
04
03
3704
05
3705
3704
06
12
MAGENTA
1603
1320
A
Fig.21
14
3704
07
11
10
1320
08
3705
UN34
09

INDEX	PART NO.	PART NAME		REC	QTY	INDEX	PART NO.	PART NAME	REC	QTY
01	1144-0756-01	REGULATING PLATE	YELLOW	RP	1					
02	1144-0757-01	REGULATING PLATE	MAGENTA	RP	1					
03	1144-5019-01	MAT			4					
04	1144-5012-01	MAT			4					
05	1144-5066-01	SEAL			2					
06	1144-5095-02	POLYESTER FILM			2					
07	9383-2210-11	CONNECTOR 2P			2					
08	1179-5085-01	SEAL			2					
09	1179-0128-01	PWB ASSY	(UN34.35)	RP	2					
10	1179-0170-01	CAP ASSY		RP	2					
11	1144-5068-01	SPONGE			2					
12	1144-5020-02	JOINT			2					
13	1179-0318-02	DEVELOPING UNIT	YELLOW	RP	1					
14	1179-0317-02	DEVELOPING UNIT	MAGENTA	RP	1					

INDEX	PART NO.	PART NAME	REC	QTY	SFIX

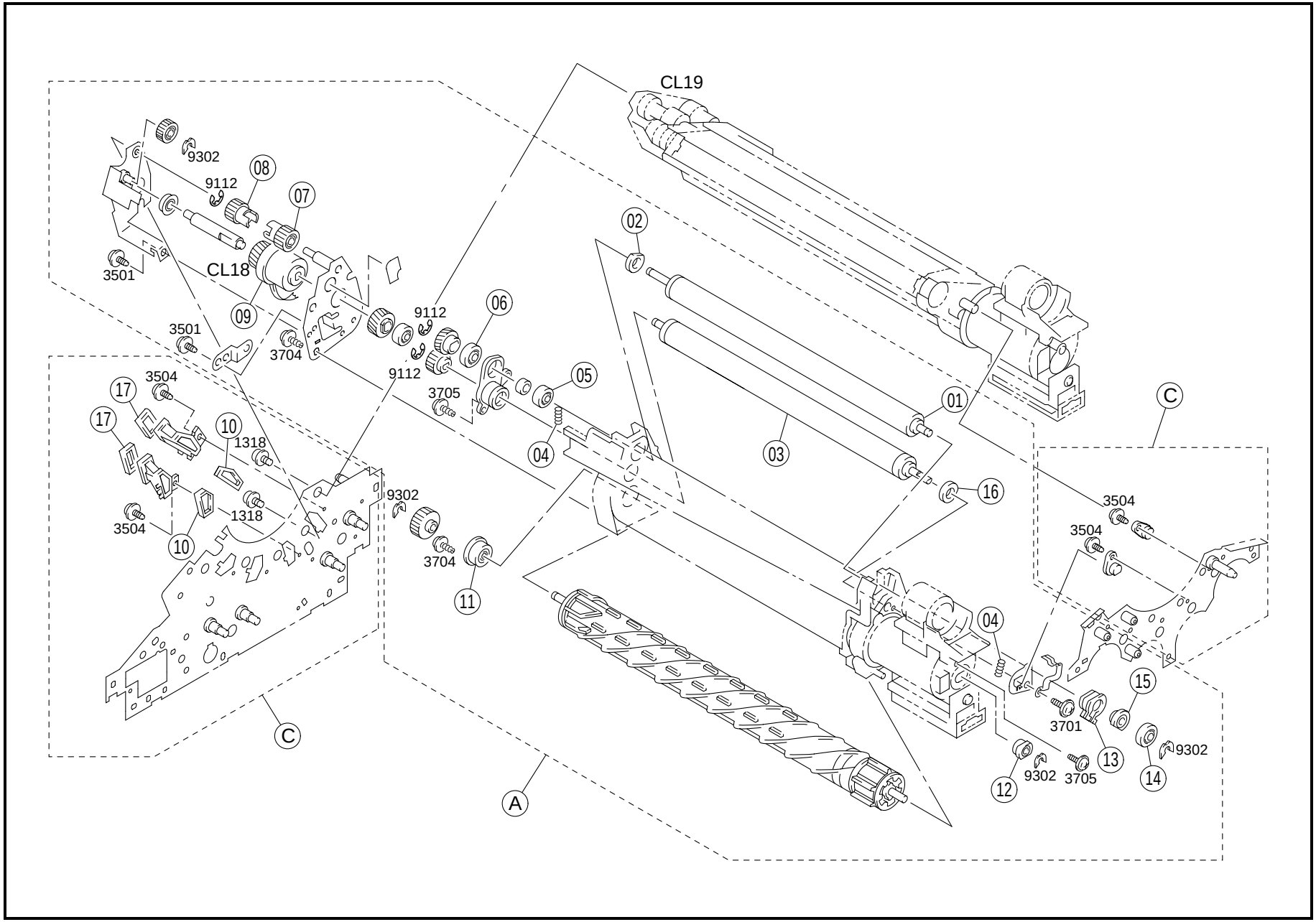
CL19
9302
08
9112
07
02
3501
CL18
09
06
9112
3501
3704
9112
05
3705
3504
17
17
10
1318
04
03
01
C
16
9302
1318
3504
10
3704
11
3504
3504
04
15
3701
13
9302
12
9302
3705
14
C
A

INDEX	PART NO.	PART NAME	REC	QTY	INDEX	PART NO.	PART NAME	REC	QTY
01	1144-5001-01	MAGNET ROLLER		2					
02	1139-5211-01	SPONGE		2					
03	1144-5002-02	MAGNET ROLLER		2					
04	1400-1226-03	PRESSURE SPRING		4					
05	1139-5246-01	BALL BEARING		2					
06	1154-5060-01	DS COLLAR	RP	2					
07	1179-5040-01	GEAR		2					
08	1144-5040-01	GEAR 15T		2					
09	9322-1000-11	CLUTCH (CL18.19)	RP	2					
10	1144-5143-02	SPONGE		2					
11	1144-0169-01	BUSHING	RP	2					
12	1065-5106-01	BUSHING	RP	2					
13	1144-0753-01	BUSHING-FNT		2					
14	1144-5008-01	ROLL	RP	2					
15	1144-5006-01	BUSHING		2					
16	1139-5205-01	SPONGE		2					
17	1144-5139-01	SPONGE		2					

INDEX	PART NO.	PART NAME	REC	QTY	SFIX

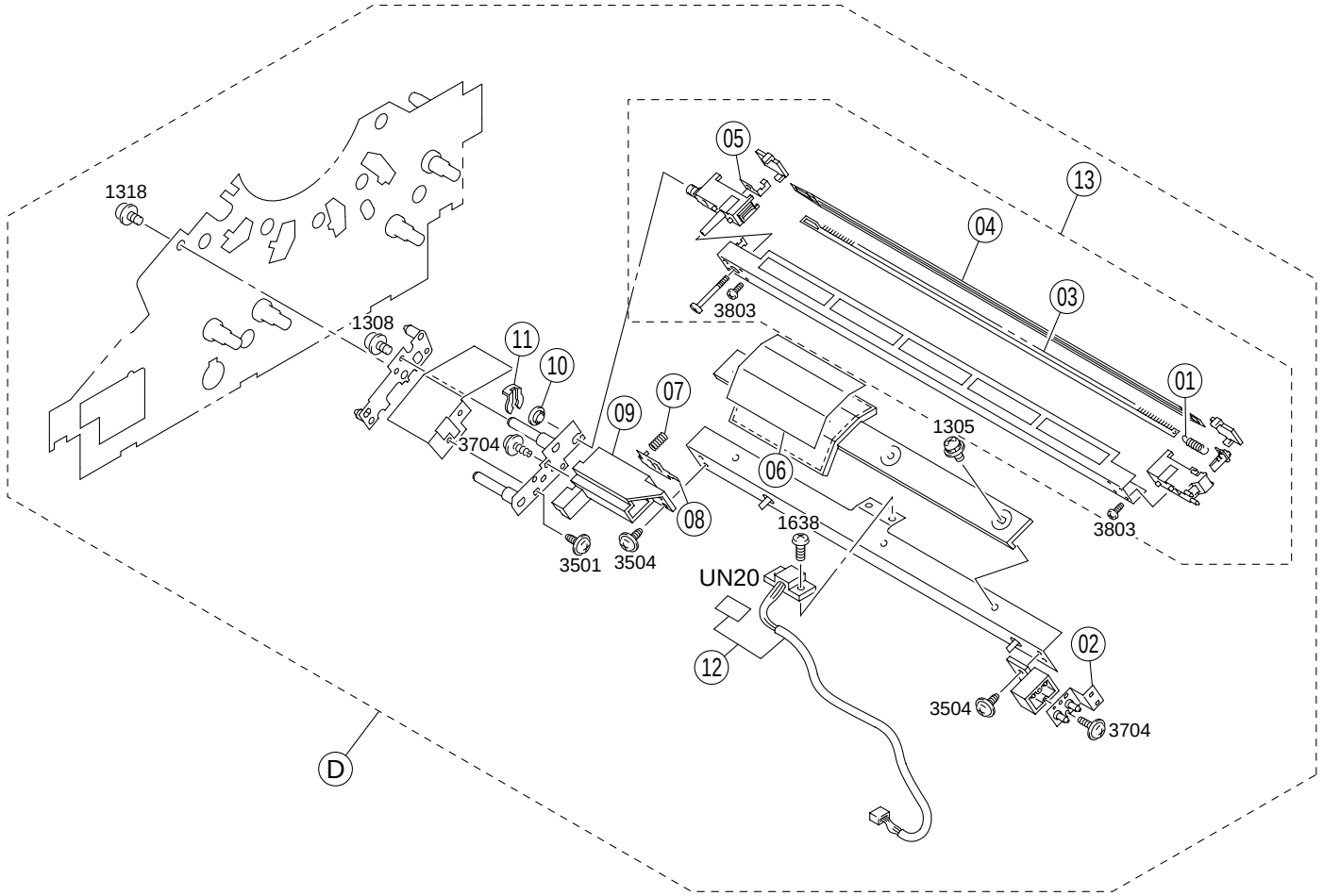
1318
1308
11
10
09
07
3704
08
3501
3504
05
13
04
3803
03
01
1305
06
1638
3803
UN20
12
02
3504
3704
D

INDEX	PART NO.	PART NAME	REC	QTY	INDEX	PART NO.	PART NAME	REC	QTY
01	4163-4116-01	TENSION SPRING		1					
02	1179-4373-01	FRAME		1					
03	1179-4355-01	TERMINAL	RP	1					
04	1179-4354-01	ELECTRODE NEEDLE	RP	1					
05	1179-4358-01	TERMINAL		1					
06	1144-4437-02	LIGHT SHIELD		1					
07	1179-4376-01	PRESSURE SPRING		1					
08	1179-4375-01	TERMINAL		1					
09	1179-4374-01	FRAME		1					
10	1200-3220-01	BUSHING		1					
11	1033-4402-01	STOPPER RING		1					
12	1179-0902-01	AIDC KIT (UN20)	RP	1					
13	1179-0355-02	CHARGE CORONA	RP	1					

INDEX	PART NO.	PART NAME	REC	QTY	SFIX

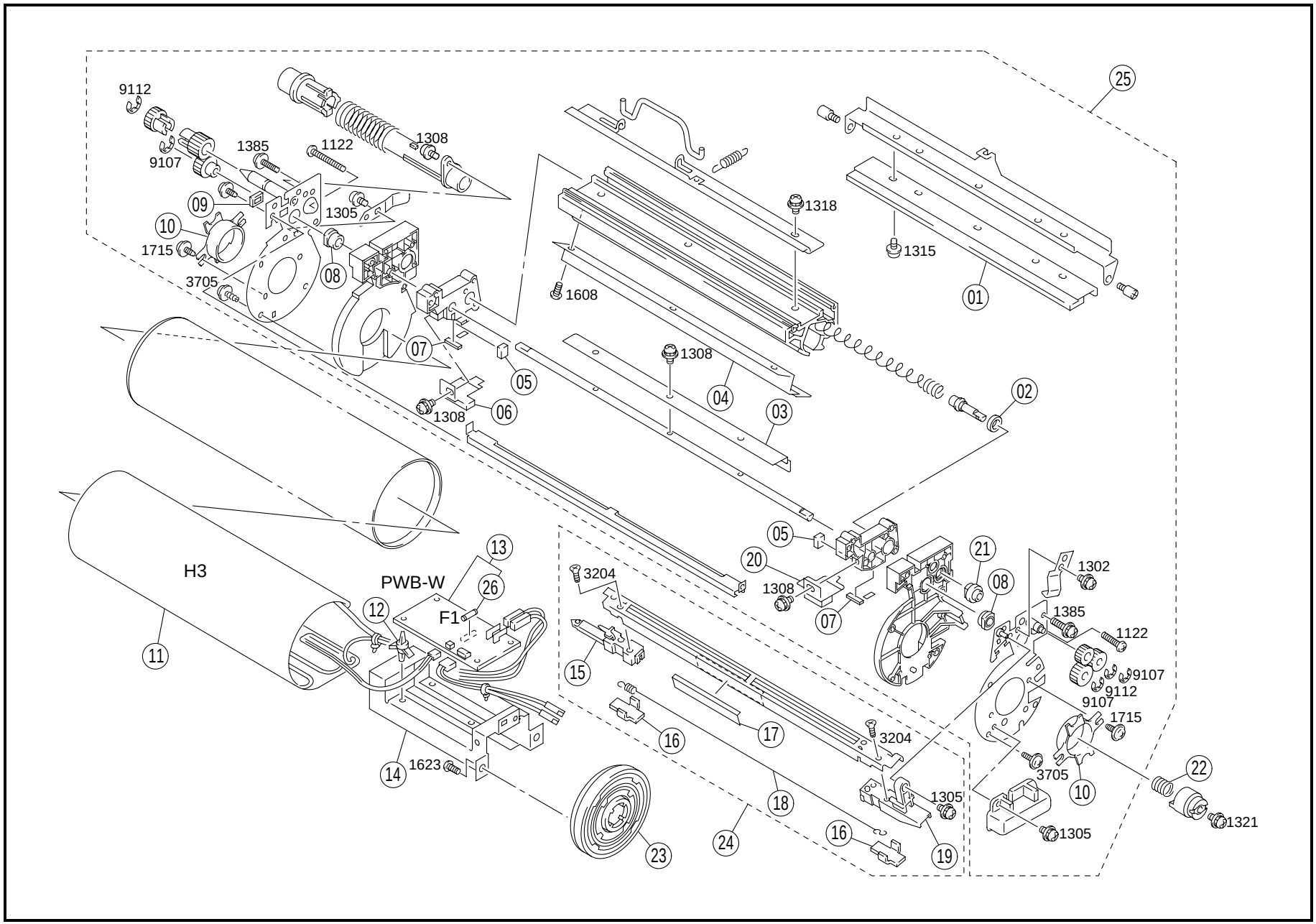
9112
9107
1385
1122
1308
1305
1715
3705
1318
1315
1608
1308
1308
H3
PWB-W
F1
3204
1308
1302
1385
1122
9107
9112
9107
1715
3705
1305
1305
1321
1623
01
02
03
04
05
06
07
08
09
10
11
12
13
14
15
16
17
18
19
20
21
22
23
24
25
26

INDEX	PART NO.	PART NAME	REC	QTY
01	1144-5513-02	CLEANING BLADE	RP	1
02	1036-5609-02	SPONGE		1
03	1144-5524-01	PADDLE		1
04	1144-5556-03	ANTISPILL PLATE	RP	1
05	1144-5539-02	SPONGE		2
06	1144-0763-02	SIDE SEAL-RR	RP	1
07	1144-5541-04	SPONGE		2
08	1065-5106-01	BUSHING		2
09	1144-5540-01	SPONGE		1
10	1144-5544-13	HOLDER	RP	2
11	1144-0117-02	HEATER PC DRUM (H3)		1
12	9384-1900-56	PWB SUPPORT 6.35H		4
13	1154-0116-02	PW BOARD-W HEATER (PWB-W)		1
14	1144-7285-03	BRACKET		1
15	1144-5553-01	REAR HOLDER		1
16	1074-4214-01	COVER		2
17	1179-5571-01	SHIELD PLATE		1
18	1074-0161-01	CORONA WIRE	RP	1
19	1144-5552-12	FRONT HOLDER		1
20	1144-0762-02	SIDE SEAL-FNT	RP	1
21	1067-3517-01	BUSHING		1
22	1154-2039-01	PRESSURE SPRING		1
23	1144-7283-03	FLANGE	RP	1
24	1179-0330-01	CLEANING CORONA UNIT	RP	1
25	1179-0327-01	CLEANING UNIT		1
26	9346-3720-21	FUSE 3A (F1)	RP	1

INDEX	PART NO.	PART NAME	REC	QTY	SFIX

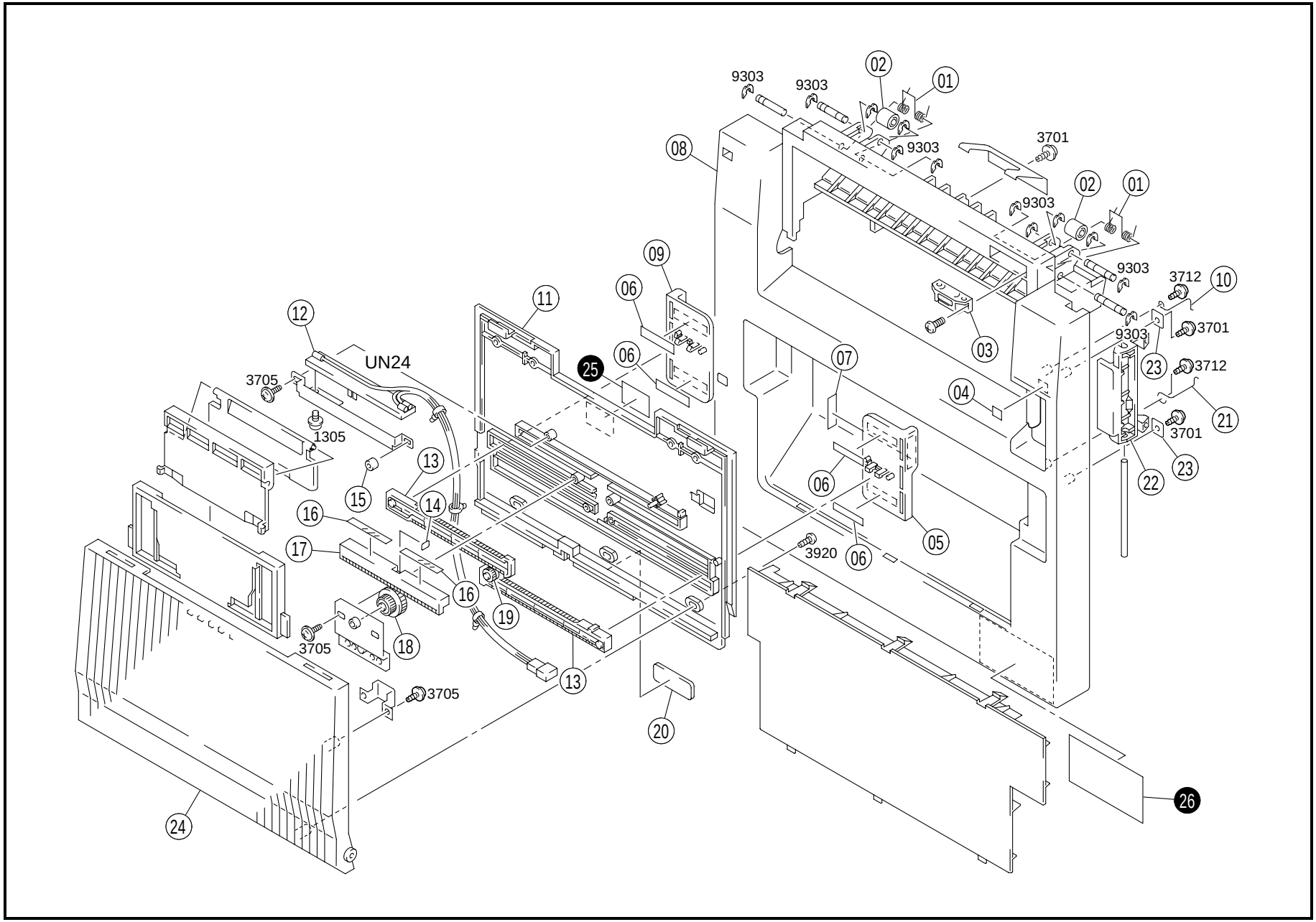
9303
9303
02
01
08
9303
3701
02
01
9303
09
9303
3712
10
06
11
12
3701
9303
03
UN24
25
06
07
23
3712
3705
04
21
1305
3701
13
23
22
15
14
06
16
05
17
3920
06
16
19
18
3705
13
3705
20
26
24

INDEX	PART NO.	PART NAME	REC	QTY
01	1144-3084-01	TORSION SPRING		2
02	1054-4204-01	ROLL		2
03	1273-3535-01	MAGNET CATCH		1
04	1144-7335-01	LABEL L1		1
05	1075-3355-02	GUIDE		1
06	0704-5401-01	SEAL		4
07	1179-7360-01	LABEL		1
08	1154-3153-02	DOOR		1
09	1075-3354-02	GUIDE		1
10	1144-3154-01	TORSION SPRING		1
11	1144-3118-01	TABLE		1
12	1075-0130-02	RESISTOR SIZE (UN24)		1
13	1075-3359-01	RACK GEAR		2
14	1075-3388-01	POLYESTER FILM		1
15	1200-2105-05	COLLAR		1
16	1075-3387-01	POLYESTER FILM		2
17	1075-3360-01	RACK GEAR		1
18	1075-3361-01	GEAR 19/25T		1
19	1300-3302-05	GEAR 10T		1
20	1179-3132-01	FRICTION SHEET		1
21	1144-3155-01	TORSION SPRING		1
22	4425-3245-03	LEVER		1
23	1053-3103-01	PLATE		2
24	1075-3353-03	COVER		1

INDEX	PART NO.	PART NAME	REC	QTY	SFIX
25	1144-7358-01	LABEL		1	011
25	1144-7359-01	LABEL FACES DOWN		1	211, 311, 313
26	1274-7305-01	LABEL CAUTION		1	211, 311, 313

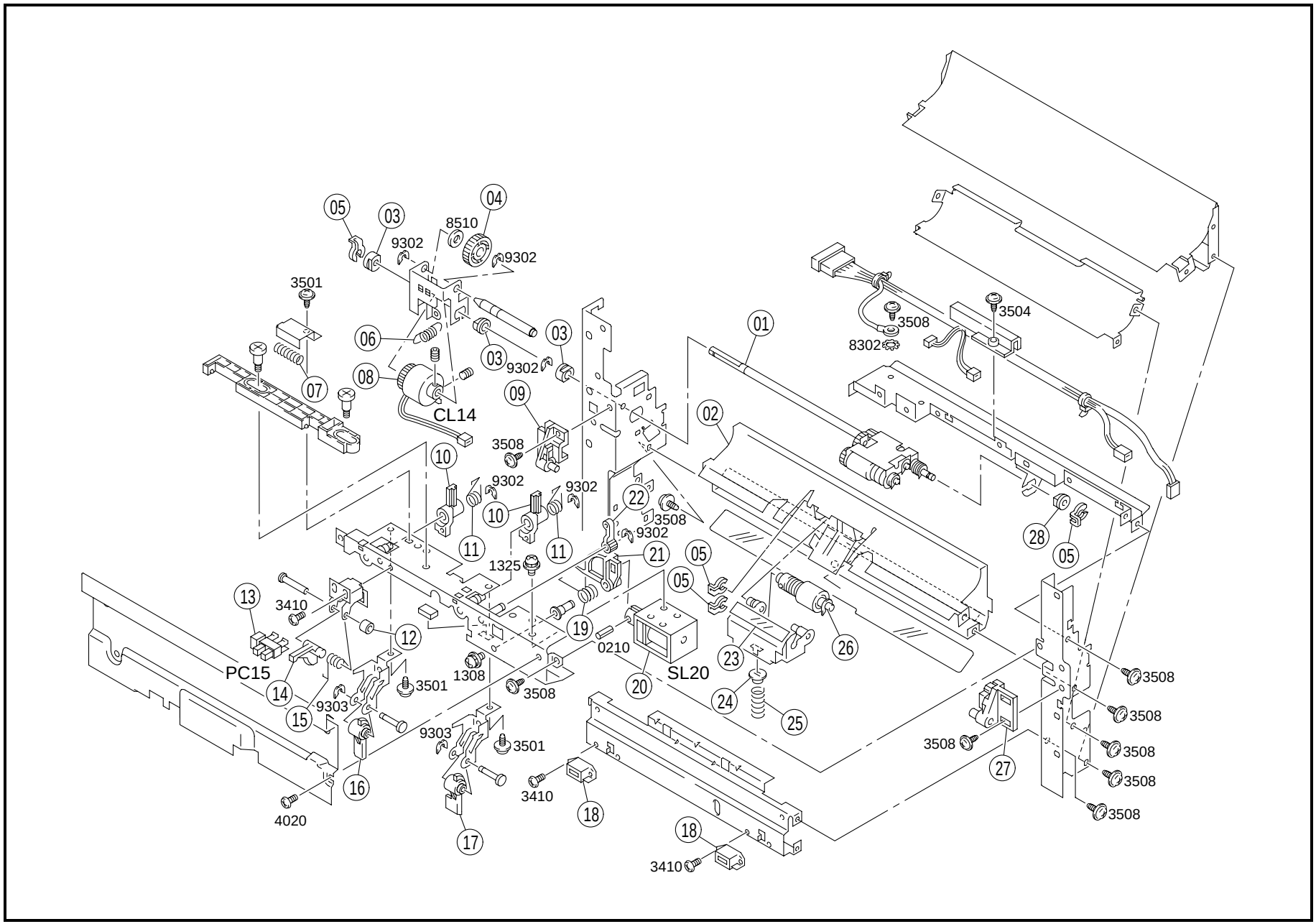
05
03
04
8510
9302
9302
3501
06
03
03
9302
07
08
CL14
09
01
3508
8302
3504
02
3508
10
9302
9302
22
3508
9302
10
11
11
1325
21
05
05
28
05
13
3410
12
19
0210
SL20
23
26
PC15
14
1308
3501
3508
20
24
25
3508
3508
15
9303
9303
3501
3508
3508
3508
3508
27
16
3410
18
4020
17
18
3410

INDEX	PART NO.	PART NAME	REC	QTY
01	1144-0761-01	FEED ROLLER ASSY	RP	1
02	1144-3103-01	GUIDE PLATE		1
03	1077-5805-01	BUSHING		3
04	1136-5774-01	GEAR 26T		1
05	1033-4402-01	STOPPER RING		4
06	4426-2201-01	TENSION SPRING		1
07	1179-3183-01	PRESSURE SPRING		1
08	9322-1310-31	CLUTCH TAKE-UP (CL14)	RP	1
09	1075-3364-01	SUPPORT		1
10	1154-3322-01	PAWL		2
11	1139-3369-01	TORSION SPRING		2
12	1200-2105-05	COLLAR		1
13	9335-1000-11	SOLID STATE SWITCH ENPTY (PC15)		1
14	1075-3356-02	ACTUATOR		1
15	1075-3318-02	TORSION SPRING		1
16	1154-3389-01	STOPPER		1
17	1154-3390-01	LEVER		1
18	1273-3535-01	MAGNET CATCH		2
19	1139-3346-02	TORSION SPRING		1
20	9321-2310-41	SOLENOID PICK-UP (SL20)		1
21	1139-3348-02	SEGMENT GEAR		1
22	1139-3370-01	GEAR 14T		1
23	1144-3134-01	POLYESTER FILM		1
24	1144-3097-01	HOLDER		1
25	1144-3115-01	PRESSURE SPRING		1
26	1136-0162-01	ROLLER	RP	1
27	1075-3363-01	SUPPORT		1
28	1200-3221-07	BUSHING		1

INDEX	PART NO.	PART NAME	REC	QTY	SFIX

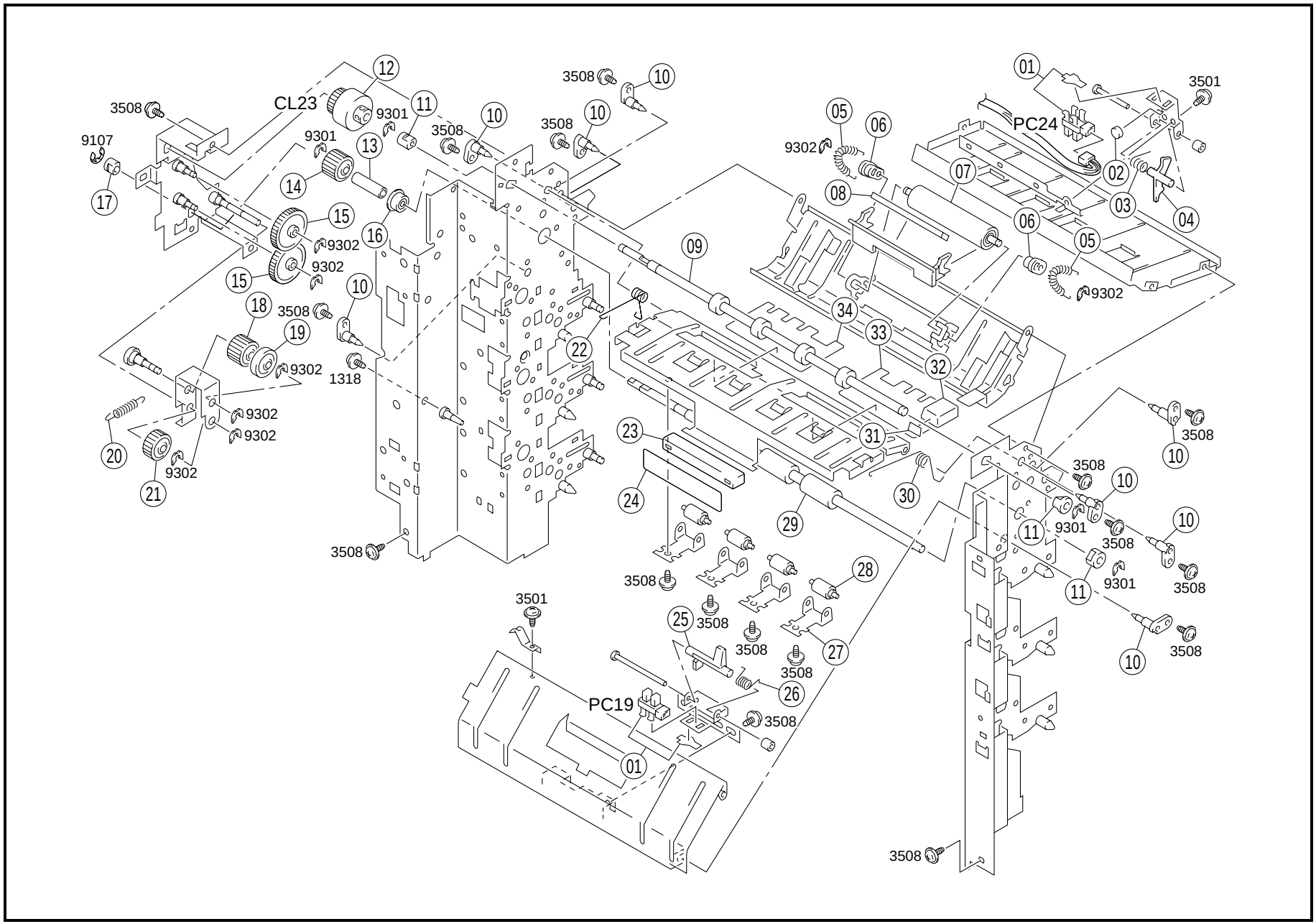
CL23
PC24
PC19
3508
9301
9302
9107
1318
3501

INDEX	PART NO.	PART NAME	REC	QTY
01	4642-0901-01	PHOTO INTERRUPTER (PC19.24)		2
02	1139-3147-01	SEAL		1
03	1139-3131-01	TORSION SPRING		1
04	1139-3127-01	ACTUATOR		1
05	1144-3068-01	TENSION SPRING		2
06	1139-3102-01	BUSHING		2
07	1144-3022-01	ROLLER		1
08	1144-3023-01	SPONGE	RP	1
09	1144-3807-01	ROLLER	RP	1
10	1053-4422-01	HOLDER		8
11	1200-3134-16	BUSHING		3
12	9322-1310-31	CLUTCH TRANSPORT (CL23)	RP	1
13	1144-3028-01	COLLAR		1
14	1300-3132-11	GEAR 22T		1
15	1074-5114-01	GEAR 42T		2
16	1300-4342-07	BALL BEARING		1
17	1200-3121-07	BUSHING		1
18	1076-2904-02	GEAR 24T		1
19	1075-2568-01	SPACER		1
20	1144-3090-01	TENSION SPRING		1
21	1300-3132-15	GEAR 24T		1
22	1144-3802-03	TORSION SPRING		1
23	1076-3906-01	COVER		1
24	1144-7328-01	LABEL M3		1
25	1144-3095-01	ACTUATOR		1
26	1144-3058-01	TORSION SPRING		1
27	4427-3207-01	PLATE SPRING		4
28	4417-3412-02	ROLL		4
29	1144-3067-03	ROLLER		1
30	1144-3801-03	TORSION SPRING		1
31	1144-7327-01	LABEL M2		1
32	1075-3577-02	KNOB		1
33	1144-3806-01	POLYESTER FILM		1
34	1144-3805-02	POLYESTER FILM		1

INDEX	PART NO.	PART NAME	REC	QTY	SFIX

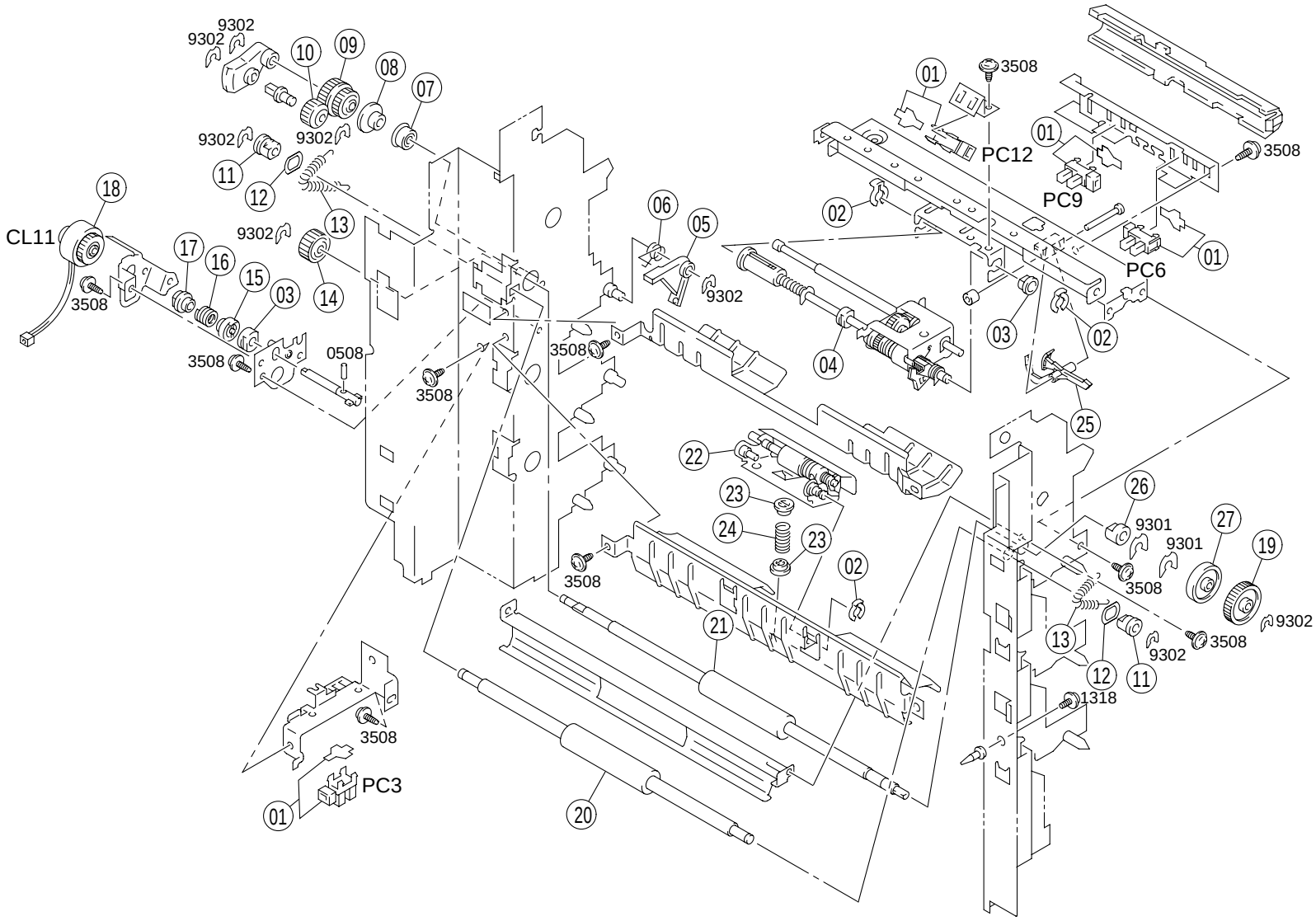
9302
9302
10
09
08
07
9302
9302
11
12
13
9302
14
18
CL11
17
16
15
03
3508
3508
0508
3508
06
05
9302
3508
04
01
3508
01
PC12
PC9
3508
02
01
PC6
03
02
25
22
23
24
23
02
21
26
9301
9301
27
19
3508
3508
9302
13
12
11
9302
3508
1318
3508
PC3
01
20

INDEX	PART NO.	PART NAME	REC	QTY
01	4642-0901-01	PHOTO INTERRUPTER (PC3.6.9.12)		4
02	1033-4402-01	STOPPER RING		3
03	1274-2611-01	BUSHING		2
04	1144-0765-01	FEED ROLLER ASSY	RP	1
05	0931-3026-01	LEVER		1
06	0931-3027-01	TORSION SPRING		1
07	1300-4342-07	BALL BEARING		1
08	1274-2617-01	COLLAR		1
09	1274-2604-02	PLY GEAR 23/22T		1
10	1144-3124-01	GEAR 18T		1
11	1200-3225-07	BUSHING		2
12	1274-3605-01	GUIDE		2
13	1144-3096-01	TENSION SPRING		2
14	1273-2515-01	GEAR 22T		1
15	1274-2614-01	ARBOR		1
16	1274-2513-01	CLUTCH SPRING		1
17	1274-2615-01	BUSHING		1
18	9322-1310-31	CLUTCH UPPER (CL11)	RP	1
19	1300-3352-17	GEAR 32T		1
20	1274-3508-01	ROLLER		1
21	1144-3062-02	ROLLER	RP	1
22	1144-0764-01	SEPARATOR ROLL ASSY	RP	1
23	1144-3097-01	HOLDER		2
24	1144-3074-01	PRESSURE SPRING		1
25	1273-3029-01	ACTUATOR		1
26	1200-3134-16	BUSHING		1
27	1144-3057-01	COLLAR		1

INDEX	PART NO.	PART NAME	REC	QTY	SFIX

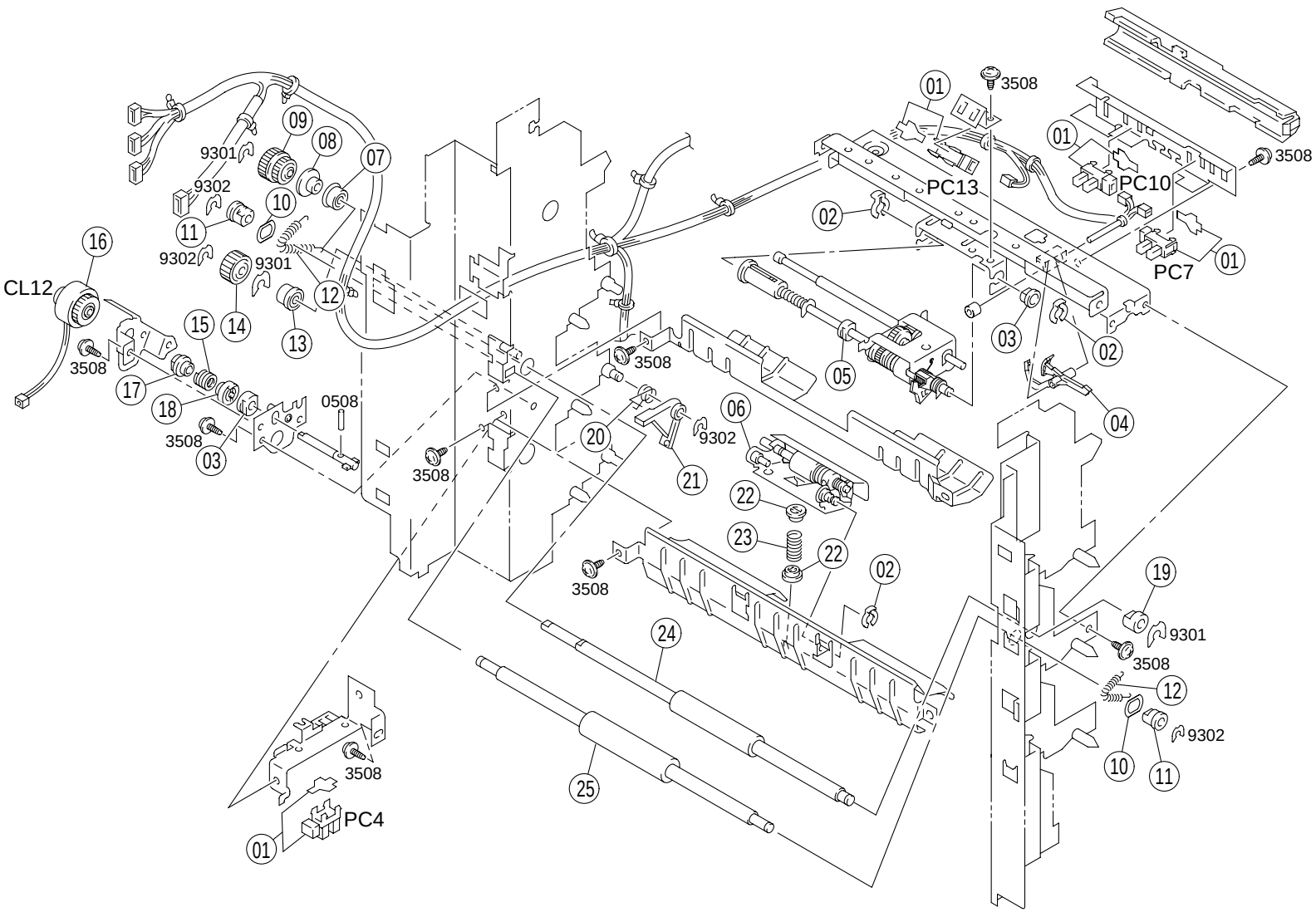
CL12
16
15
17
18
3508
03
9301
9302
09
08
07
10
11
12
13
14
0508
20
21
06
22
23
24
25
PC13
PC10
PC7
PC4
01
02
03
04
05
19

INDEX	PART NO.	PART NAME	REC	QTY
01	4642-0901-01	PHOTO INTERRUPTER (PC4.7.10.13)		4
02	1033-4402-01	STOPPER RING		3
03	1274-2611-01	BUSHING		2
04	1273-3029-01	ACTUATOR		1
05	1144-0765-01	FEED ROLLER ASSY	RP	1
06	1144-0764-01	SEPARATOR ROLL ASSY	RP	1
07	1300-4342-07	BALL BEARING		1
08	1274-2617-01	COLLAR		1
09	1274-2604-02	PLY GEAR 23/22T		1
10	1274-3605-01	GUIDE		2
11	1200-3225-07	BUSHING		2
12	1144-3096-01	TENSION SPRING		2
13	1273-2508-01	ROLL		1
14	1273-2515-01	GEAR 22T		1
15	1274-2513-01	CLUTCH SPRING		1
16	9322-1310-31	CLUTCH MIDDLE (CL12)	RP	1
17	1274-2615-01	BUSHING		1
18	1274-2614-01	ARBOR		1

INDEX	PART NO.	PART NAME	REC	QTY
19	1200-3134-16	BUSHING		1
20	0931-3027-01	TORSION SPRING		1
21	0931-3026-01	LEVER		1
22	1144-3097-01	HOLDER		2
23	1144-3074-01	PRESSURE SPRING		1
24	1154-3063-01	ROLLER		1
25	1274-3508-01	ROLLER		1

INDEX	PART NO.	PART NAME	REC	QTY	SFIX

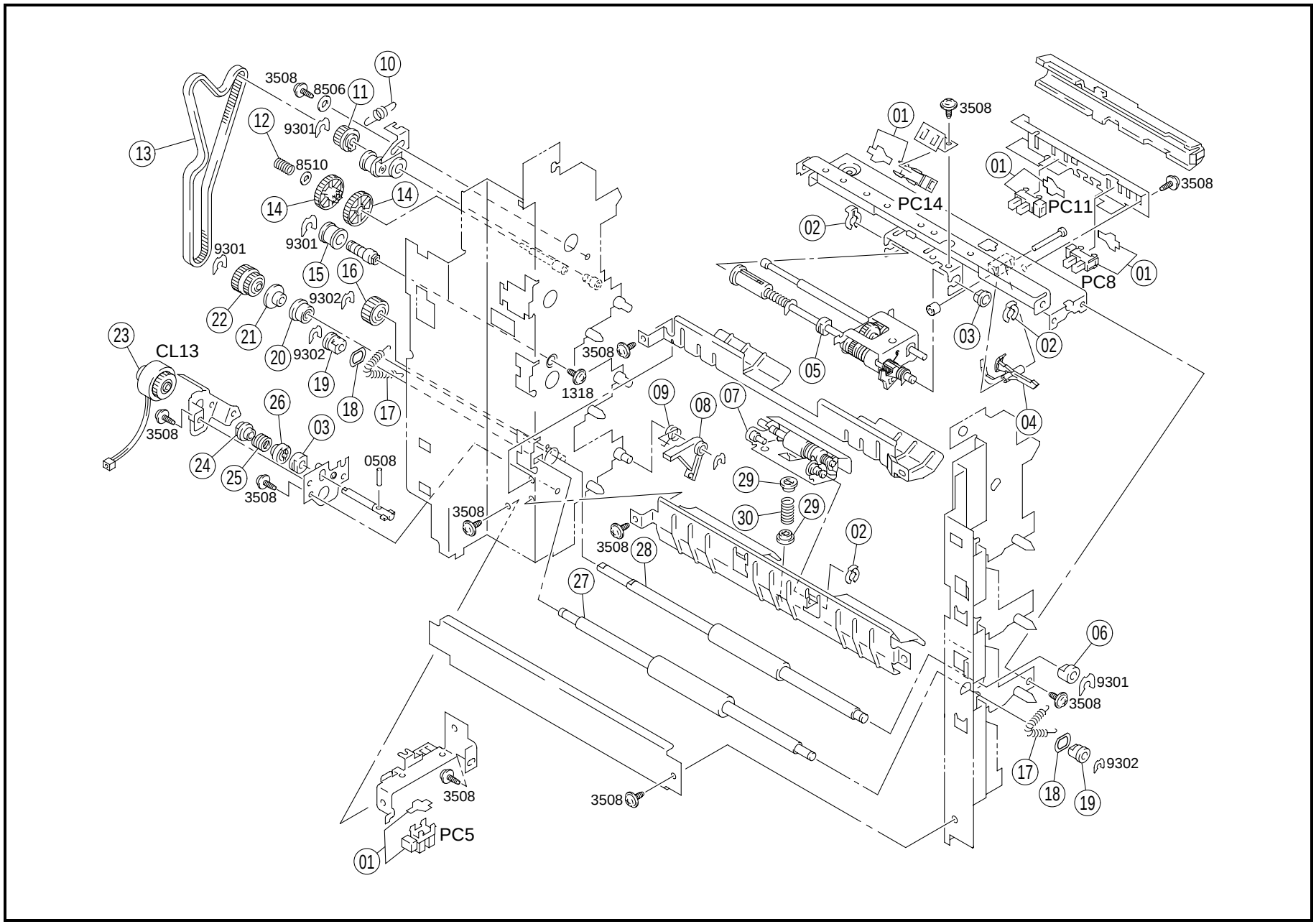
3508
8506
10
11
12
9301
13
8510
14
14
9301
9301
15
16
9302
22
21
20
9302
19
18
17
23
CL13
3508
26
03
24
25
3508
0508
3508
3508
1318
09
08
07
29
30
29
02
3508
28
27
01
3508
01
PC14
PC11
3508
02
PC8
01
03
02
05
04
06
9301
3508
17
18
19
9302
3508
3508
PC5
01

INDEX	PART NO.	PART NAME	REC	QTY
01	4642-0901-01	PHOTO INTERRUPTER (PC5.8.11.14)		4
02	1033-4402-01	STOPPER RING		3
03	1274-2611-01	BUSHING		2
04	1273-3029-01	ACTUATOR		1
05	1144-0765-01	FEED ROLLER ASSY	RP	1
06	1200-3134-16	BUSHING		1
07	1144-0764-01	SEPARATOR ROLL ASSY	RP	1
08	0931-3026-01	LEVER		1
09	0931-3027-01	TORSION SPRING		1
10	1144-3219-02	TENSION SPRING		1
11	4426-2454-12	PULLEY 18T		1
12	1144-3222-01	PRESSURE SPRING		1
13	1144-3202-01	TIMING BELT		1
14	1144-3221-01	GEAR 35T		2
15	1273-2539-01	PULLEY		1
16	1273-2515-01	GEAR 22T		1
17	1144-3096-01	TENSION SPRING		2
18	1274-3605-01	GUIDE		2
19	1200-3225-07	BUSHING		2
20	1300-4342-07	BALL BEARING		1
21	1274-2617-01	COLLAR		1
22	1274-2604-02	PLY GEAR 23/22T		1
23	9322-1310-31	CLUTCH LOWER (CL13)	RP	1
24	1274-2615-01	BUSHING		1
25	1274-2513-01	CLUTCH SPRING		1
26	1274-2614-01	ARBOR		1
27	1274-3508-01	ROLLER		1
28	1154-3063-01	ROLLER		1
29	1144-3097-01	HOLDER		2
30	1144-3074-01	PRESSURE SPRING		1

INDEX	PART NO.	PART NAME	REC	QTY	SFIX

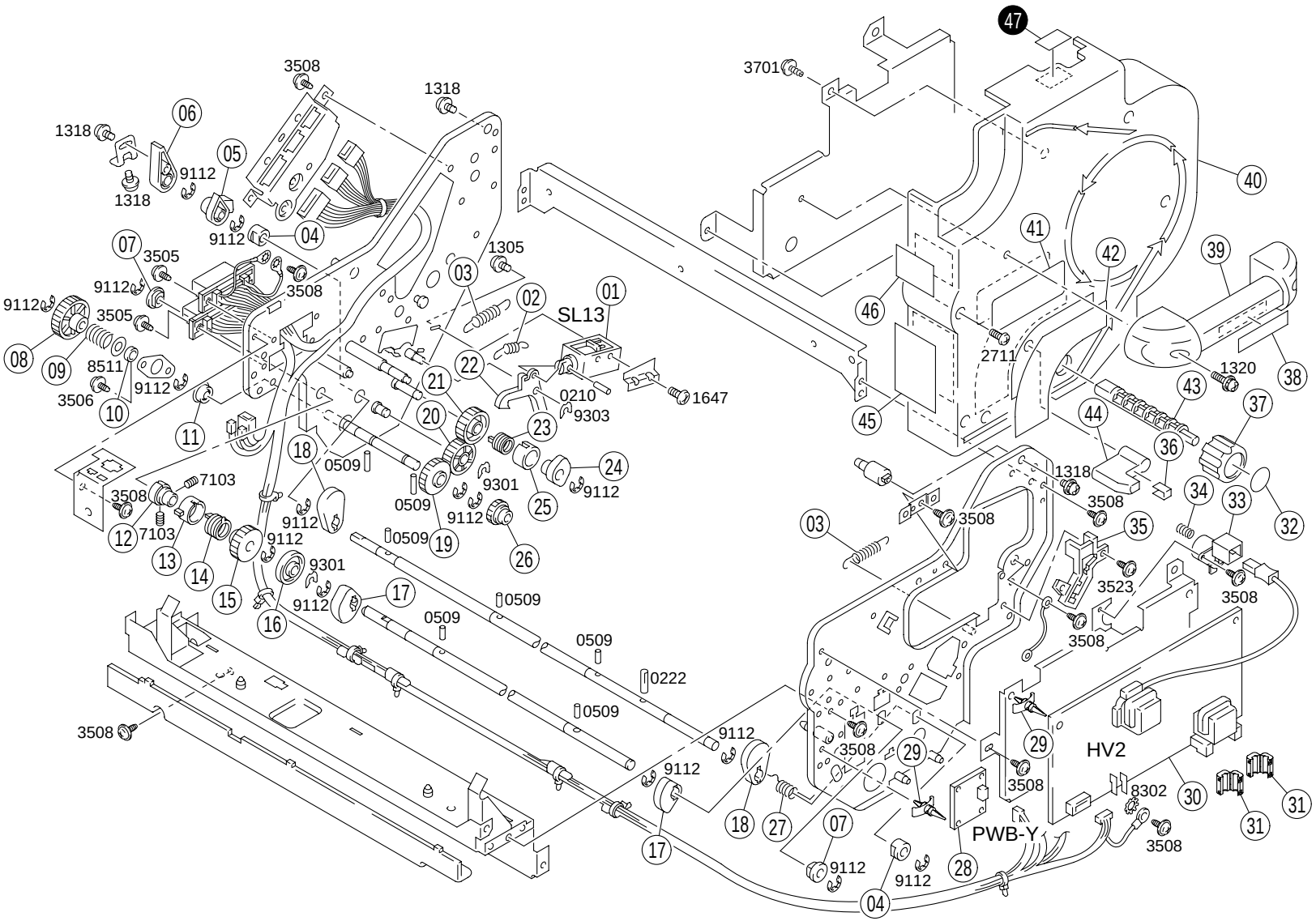
3508
1318
1318
06
05
9112
1318
9112
04
07
3505
9112
3508
9112
3505
08
09
8511
9112
3506
10
11
1305
03
02
01
SL13
22
21
20
0210
9303
23
1647
18
0509
24
9112
25
9301
0509
9112
26
0509
19
7103
3508
12
7103
13
14
9112
15
9112
16
9301
17
0509
0509
0509
0222
0509
3508
9112
9112
17
18
27
07
9112
04
3701
47
40
41
42
39
46
2711
1320
38
43
45
44
37
36
1318
3508
34
33
32
03
3508
35
3523
3508
3508
29
HV2
3508
29
3508
8302
30
31
31
PWB-Y
28
3508

INDEX	PART NO.	PART NAME	REC	QTY
01	9321-2120-31	SOLENOID (SL13)		1
02	1400-2163-08	TENSION SPRING		1
03	1144-4565-01	TENSION SPRING		2
04	1200-3134-16	BUSHING		2
05	1144-4562-05	LEVER		1
06	1061-4553-02	LEVER		1
07	1200-3231-05	BUSHING		2
08	1144-3523-02	GEAR 36T		1
09	1400-1187-02	PRESSURE SPRING		1
10	1200-2466-12	COLLAR		1
11	1300-4342-07	BALL BEARING		1
12	1144-4312-02	ARBOR		1
13	1144-4304-02	RATCHET		1
14	1144-4303-01	CLUTCH SPRING		1
15	1144-4311-01	GEAR 30T		1
16	1144-4335-01	ROLL		1
17	1179-4306-01	CAM		2
18	1144-4564-01	CAM		2
19	1144-3522-01	GEAR 32T		1
20	1065-2853-01	GEAR 35T		1
21	1144-4549-01	GEAR 30T		1
22	1144-4547-01	LEVER		1
23	1061-5706-01	CLUTCH SPRING	RP	1
24	1144-4545-03	CAM		1
25	1144-4546-01	RATCHET		1
26	1144-3524-01	GEAR 20T		1
27	1144-4566-01	TORSION SPRING		1
28	1179-6073-01	PWB ASSY SENSOR (PWB-Y)		1
29	9384-1900-57	PWB SUPPORT 9.53H		10
30	1179-6212-01	HV TRANSFORMER (HV2)	RP	1
31	1144-6272-01	FERRITE CORE		2
32	1144-7334-01	LABEL M9		1
33	1154-4912-01	HOLDER		1
34	1400-1122-05	PRESSURE SPRING		1
35	1154-4791-01	COVER		1
36	1144-7330-02	LABEL M4		1
37	1144-3080-01	KNOB		1
38	1144-7331-02	LABEL M6		1
39	1144-4787-01	HANDLE		1
40	1144-4785-04	COVER		1
41	1179-7302-01	LABEL		1
42	1144-7325-02	LABEL M4 UNLOCK		1
43	1144-3529-02	JOINT		1
44	1144-4567-02	RELEASE KNOB		1
45	1154-7312-01	LABEL		1
46	1144-7381-01	LABEL CAUTION		1
47	1144-7366-01	LABEL PLEASE DO NOT		1

SFIX
211

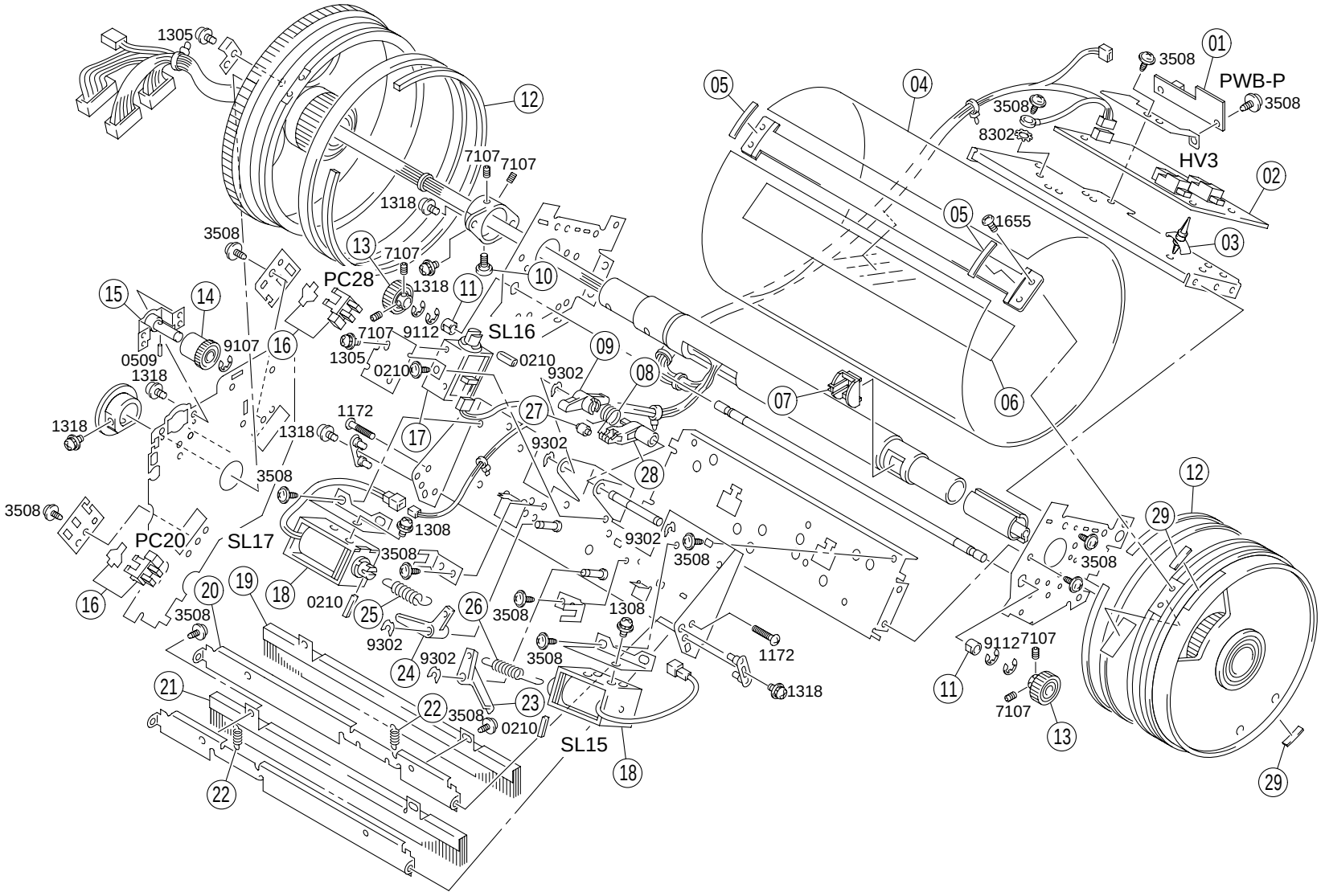
1305
12
7107
7107
1318
3508
13
7107
PC28
1318
11
10
15
14
9107
16
0509
1318
7107
9112
SL16
09
1305
0210
0210
9302
08
07
06
05
04
3508
01
PWB-P
3508
8302
HV3
02
05
1655
03
1318
1172
27
17
1318
9302
28
1318
3508
3508
PC20
SL17
1308
9302
3508
3508
3508
12
29
16
20
19
18
0210
25
26
3508
1308
3508
9302
9302
24
3508
1172
1318
9112
7107
11
7107
13
21
22
3508
23
0210
SL15
18
22
29

INDEX	PART NO.	PART NAME	REC	QTY
01	1144-6074-01	PW BOARD-P (PWB-P)	RP	1
02	1179-6213-01	HV TRANSFORMER (HV3)	RP	1
03	9384-1900-56	PWB SUPPORT 6.35H		4
04	1154-4507-01	TRANSFER FILM	RP	1
05	1154-4514-02	CUSHION		2
06	1154-4511-02	POLYESTER FILM		1
07	1179-4733-01	EDGE COVER		1
08	1144-4685-01	TORSION SPRING		1
09	1144-4684-03	LEVER		1
10	1100-1330-09	SHOULDER SCREW		1
11	1200-3134-16	BUSHING		2
12	1154-4515-02	CUSHION		2
13	1154-4737-01	GEAR 28T		2
14	1179-4582-01	TORQUE LIMITER		1
15	1179-0256-01	BRACKET ASSY		1
16	4642-0901-01	PHOTO INTERRUPTER (PC20.28)		2
17	9321-2620-41	SOLENOID LIFTING (SL16)		1
18	9321-2110-11	SOLENOID (SL15.17)		2
19	1144-4623-04	BRUSH		1
20	1144-4625-03	BRACKET		1
21	1144-4633-03	BRUSH		1
22	1144-4638-01	TENSION SPRING		2
23	1144-4626-01	LEVER		1
24	1144-4635-01	LEVER		1
25	1144-4632-01	TENSION SPRING		1
26	1144-4622-01	TENSION SPRING		1
27	1144-4681-01	ROLL		1
28	1144-4682-02	ARM		1
29	1154-4516-02	SHEET		2

INDEX	PART NO.	PART NAME	REC	QTY	SFIX

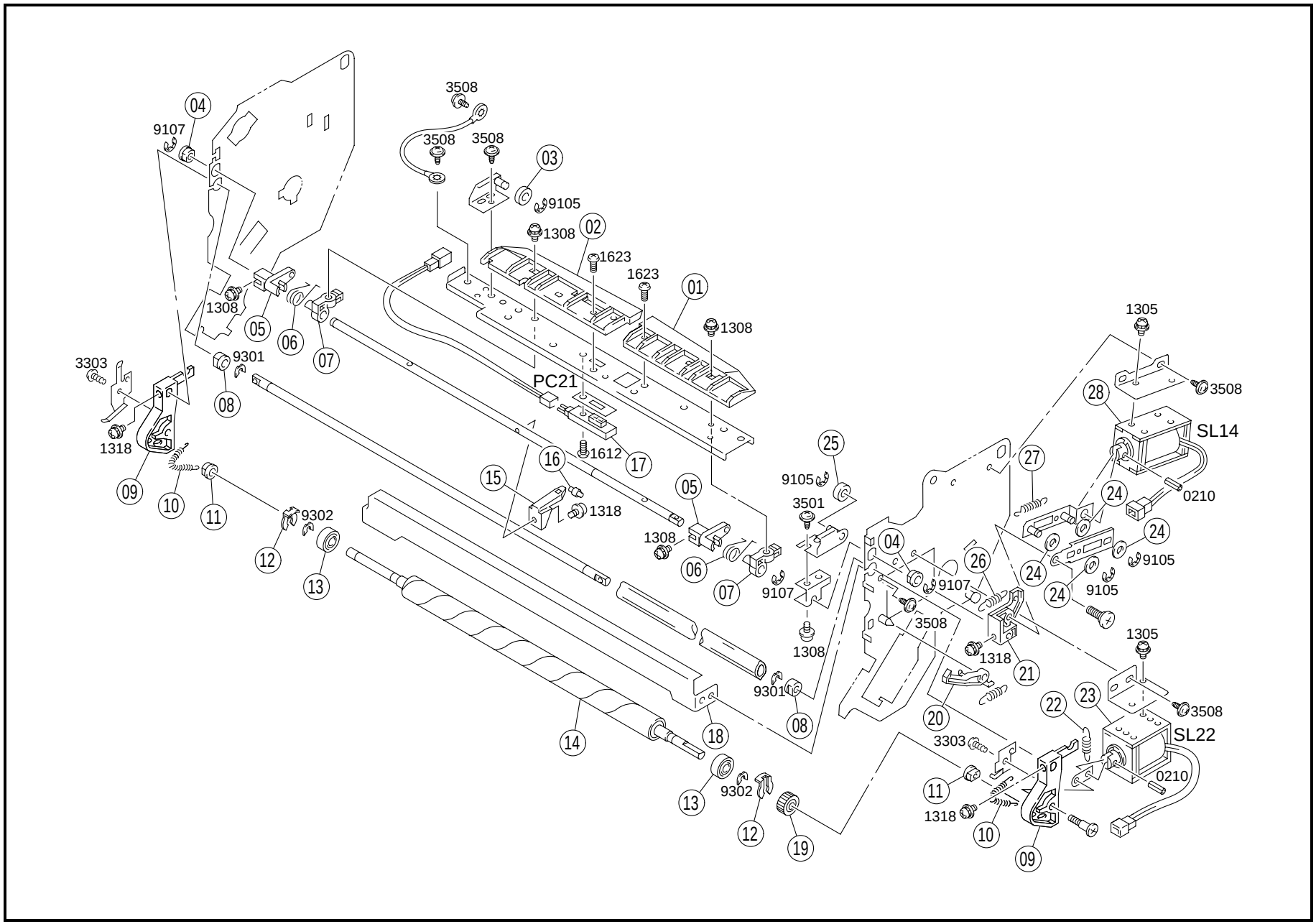
3508
3508
3508
03
9105
1308
02
1623
1623
01
1308
04
9107
1308
05
06
07
3303
9301
08
PC21
1318
09
10
11
9302
12
13
1612
17
16
15
1318
05
1308
06
07
9107
9301
08
14
18
13
9302
12
19
25
9105
3501
04
9107
3508
1308
1318
21
20
1305
3508
28
SL14
0210
27
24
24
9105
24
9105
26
1305
3508
22
23
SL22
0210
3303
11
1318
10
09

INDEX	PART NO.	PART NAME	REC	QTY
01	1154-4718-02	GUIDE		1
02	1154-4719-02	GUIDE		1
03	1144-4704-01	ROLL		1
04	1200-3221-07	BUSHING		2
05	1144-4706-02	LEVER		2
06	1144-4720-01	TORSION SPRING		2
07	1144-4705-01	HOLDER		2
08	1200-3131-03	BUSHING		2
09	1144-4933-01	HOLDER		2
10	1273-3505-01	TENSION SPRING		2
11	1144-4945-02	BUSHING		2
12	1033-4402-01	STOPPER RING		2
13	1144-4328-01	ROLL		2
14	1144-4931-02	ROLLER	RP	1
15	1144-4702-03	SEPARATOR	RP	1
16	1144-4701-02	ROLL		1
17	9335-1820-32	PHOTO INTERRUPTER (PC21)	RP	1
18	1144-4749-02	REINFORCE PLATE		1
19	1144-4936-02	RATCHET		1
20	1144-4935-01	LEVER		1
21	1144-4711-13	LEVER		1
22	1144-4944-02	TENSION SPRING		1
23	9321-2110-42	SOLENOID OIL ROLLER (SL22)		1
24	1200-1336-02	WASHER		4
25	1154-4714-02	ROLL		1
26	1144-4708-02	TENSION SPRING		1
27	1144-4753-02	TENSION SPRING		1
28	9321-2110-11	SOLENOID PAPER SEP. (SL14)		1

INDEX	PART NO.	PART NAME	REC	QTY	SFIX

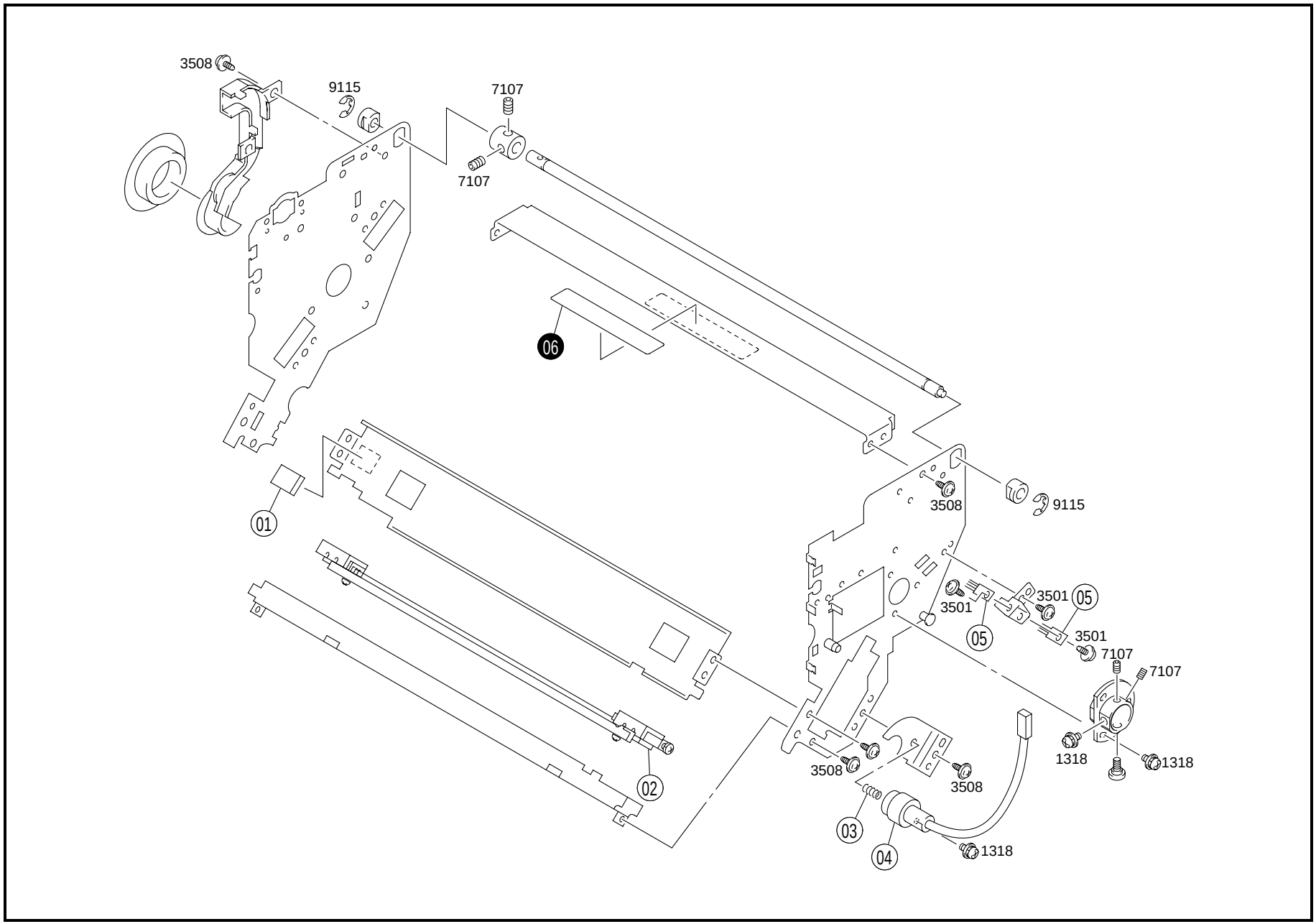
3508
9115
7107
7107
06
01
3508
9115
3501
05
3501
3501
7107
7107
1318
1318
02
3508
3508
03
04
1318

INDEX	PART NO.	PART NAME	REC	QTY	INDEX	PART NO.	PART NAME	REC	QTY
01	4428-1502-01	RUBBER STRIP		1					
02	1154-0359-01	NEUTRAL. CORONA-OUT	RP	1					
03	1400-1122-05	PRESSURE SPRING		1					
04	1144-4913-02	HOLDER		1					
05	1144-5753-02	NEUTRALIZING BRUSH		2					

INDEX	PART NO.	PART NAME	REC	QTY	SFIX
06	1144-7346-01	LABEL		1	011
06	1144-7347-01	LABEL CAUTION		1	211, 311, 313

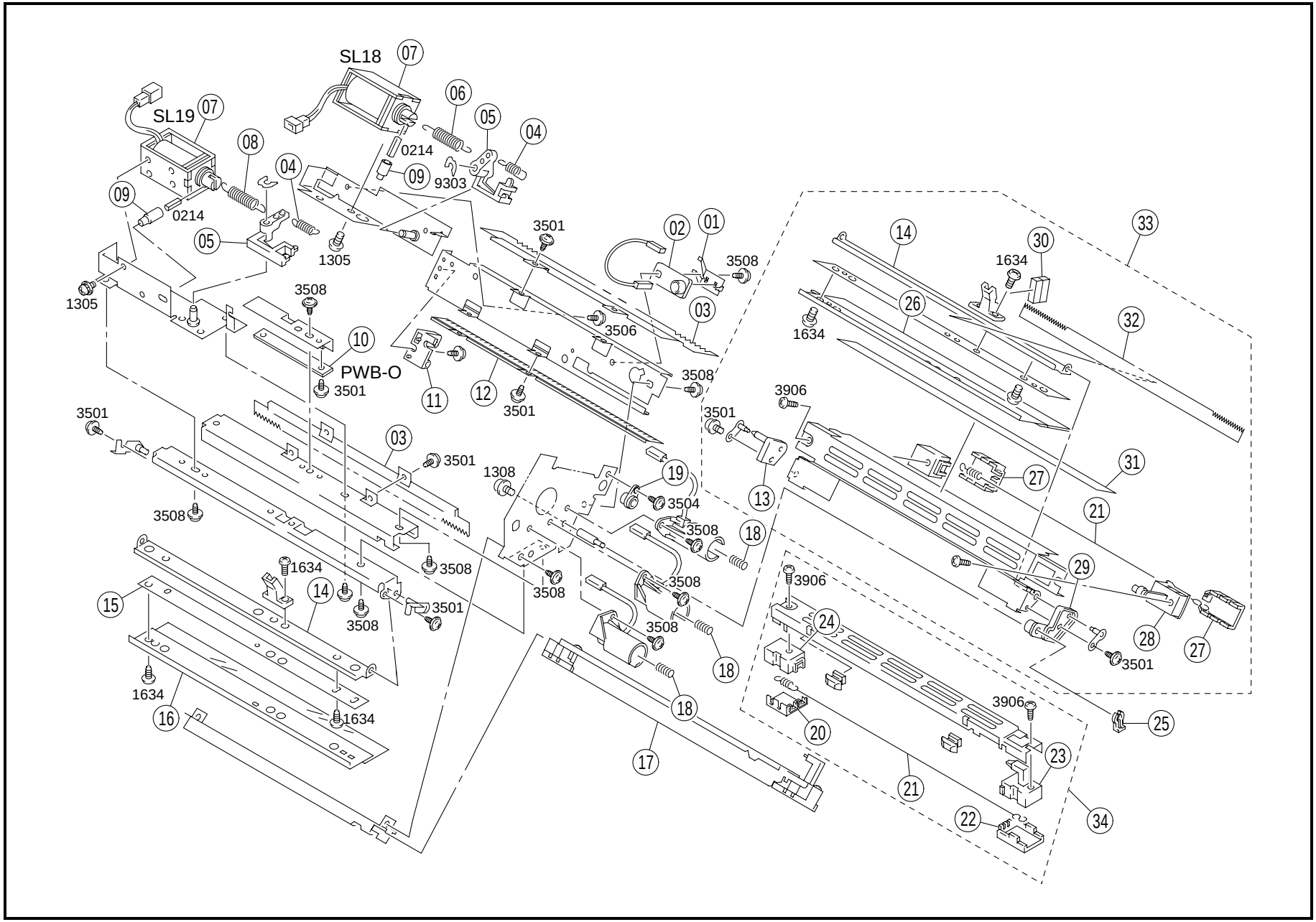
SL18
07
SL19
07
06
05
04
08
0214
09
9303
04
09
0214
05
1305
3501
02
01
3508
14
30
33
1634
1305
3508
03
26
32
1634
10
3506
PWB-O
3501
11
12
3501
3508
3906
3501
3501
03
3501
1308
19
27
31
3508
3504
13
21
3508
18
1634
3508
29
3508
3906
15
14
3501
3508
3508
24
28
27
3501
18
1634
16
1634
18
3906
25
20
17
23
21
22
34

INDEX	PART NO.	PART NAME	REC	QTY
01	1179-4747-01	TERMINAL		1
02	1179-4744-02	SPACER		1
03	1144-4730-01	NEUTRALIZING BRUSH		2
04	1144-4888-01	TENSION SPRING		2
05	1144-4864-01	LEVER		2
06	1144-4869-01	TENSION SPRING		1
07	9321-2110-11	SOLENOID (SL18.19)		2
08	1144-4867-02	TENSION SPRING		1
09	1144-4887-02	STOPPER		2
10	1144-6072-04	PW BOARD-O (PWB-O)	RP	1
11	1179-4746-01	POSITIONING PLATE		1
12	1154-4895-01	NEUTRALIZING BRUSH		1
13	1179-4885-01	POSITIONING PLATE		1
14	1144-4883-02	BRACKET		2
15	1144-4885-01	POSITIONING PLATE		1
16	1144-4865-02	POLYESTER FILM	RP	1
17	1144-0358-01	NEUTRAL. CORONA-IN	RP	1
18	1400-1122-05	PRESSURE SPRING		3
19	1144-5103-01	SUPPORT		1
20	1144-4915-04	COVER		1
21	1061-0759-01	CORONA WIRE	RP	2
22	1144-4914-02	COVER		1
23	1144-4907-02	FRONT HOLDER		1
24	1144-4909-03	REAR HOLDER		1
25	1033-4402-01	STOPPER RING		1
26	1144-4886-05	POLYESTER FILM	RP	1
27	1179-4914-01	LID		2
28	1179-4907-01	HOLDER		1
29	1179-4886-01	POSITIONING PLATE		1
30	1144-4891-02	CUSHION		1
31	1179-4917-01	INSULATING MEMBER		1
32	1179-4870-01	CONDUCTIVE MEMBER		1
33	1179-0357-02	CHARGE CORONA	RP	1
34	1144-0357-01	CHARGE CORONA	RP	1

INDEX	PART NO.	PART NAME	REC	QTY	SFIX

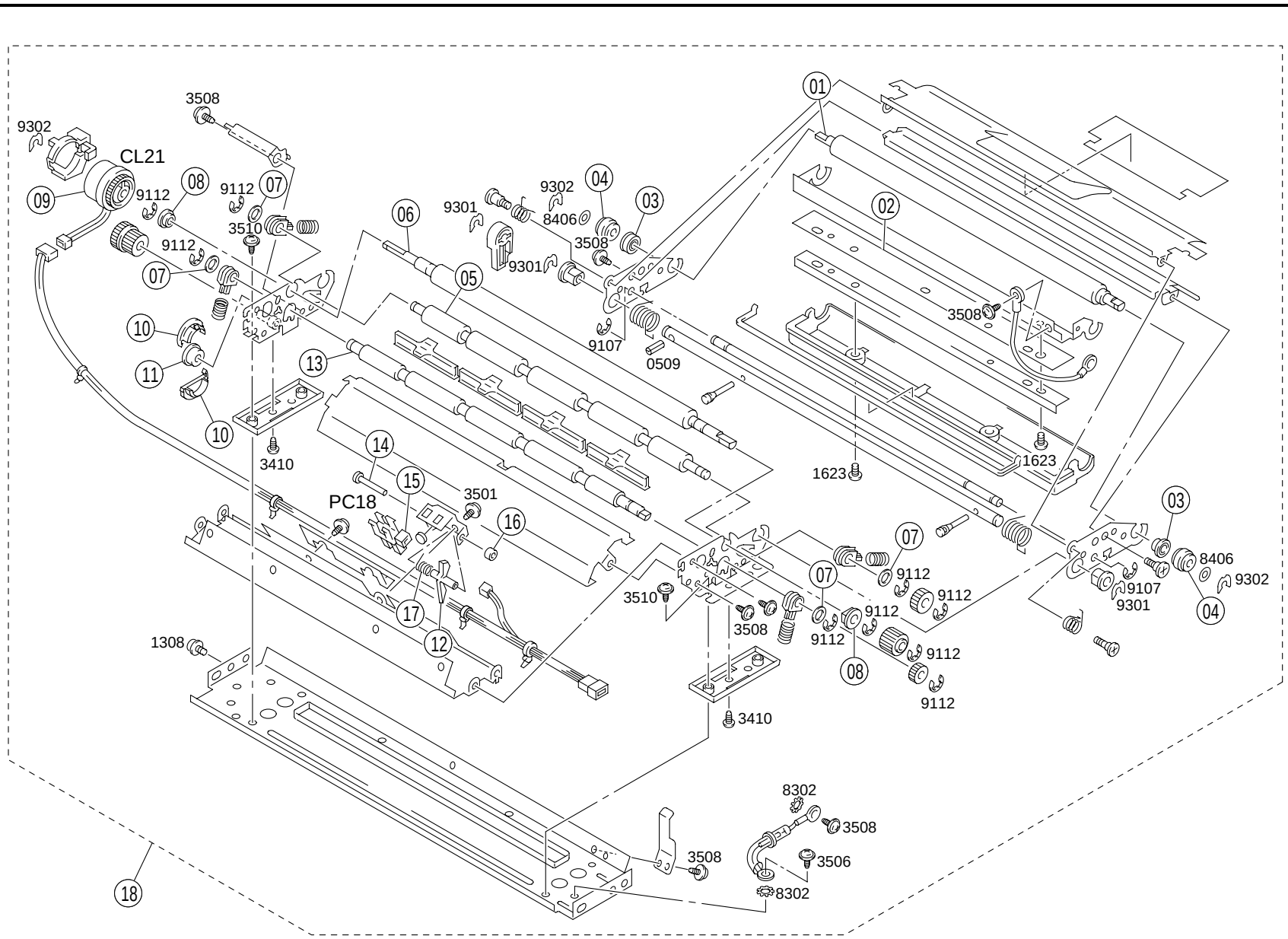
01
02
03
04
05
06
07
08
09
10
11
12
13
14
15
16
17
18
CL21
PC18
3508
9302
9112
3510
9301
8406
9107
0509
3410
1623
3501
1308
8302
3506

INDEX	PART NO.	PART NAME	REC	QTY	INDEX	PART NO.	PART NAME	REC	QTY
01	1144-4553-03	ROLLER	RP	1					
02	1144-4327-02	SCRAPER BLADE	RP	1					
03	1300-4322-05	BALL BEARING		2					
04	1144-4554-01	COLLAR	RP	2					
05	1144-3511-02	ROLLER		1					
06	1144-3505-03	ROLLER	RP	1					
07	1200-1462-03	WASHER		4					
08	1200-3231-07	BUSHING		2					
09	9322-1310-51	CLUTCH (CL21)	RP	1					
10	1154-3520-01	BUSHING		2					
11	1300-4310-03	BALL BEARING		1					
12	1139-3127-01	ACTUATOR		1					
13	1144-3525-02	ROLLER		1					
14	1200-5212-04	PIN		1					
15	9335-1000-11	SOLID STATE SWITCH EDGE (PC18)		1					
16	1200-2105-06	RETAINING RING		1					
17	1139-3131-01	TORSION SPRING		1					
18	1154-0765-01	TRANSPORT UNIT		1					

INDEX	PART NO.	PART NAME	REC	QTY	SFIX

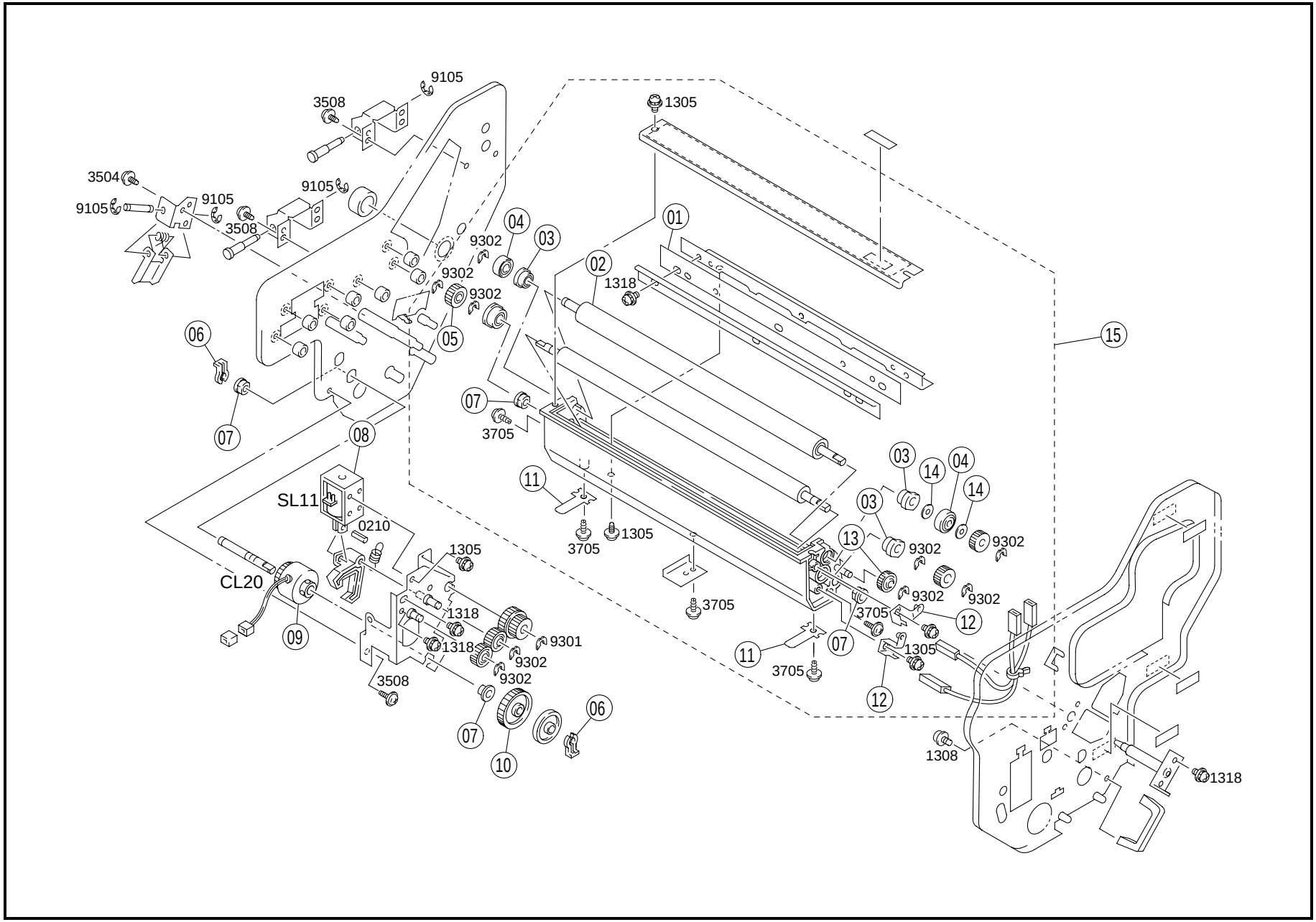
9105
3508
1305
3504
9105
9105
9105
3508
04
03
01
9302
02
9302
1318
9302
05
06
15
07
07
3705
08
03
14
04
14
11
SL11
03
0210
1305
3705
1305
13
9302
9302
CL20
1305
9302
9302
3705
1318
3705
12
09
9301
1318
9302
11
07
1305
3705
9302
3508
12
06
07
10
1308
1318

INDEX	PART NO.	PART NAME	REC	QTY	INDEX	PART NO.	PART NAME	REC	QTY
01	1144-4327-02	SCRAPER BLADE	RP	1					
02	1144-4321-01	FUR BRUSH ROLLER	RP	1					
03	1065-5106-01	BUSHING		3					
04	1144-4328-01	ROLL		2					
05	1300-3122-34	GEAR 17T		1					
06	1033-4402-01	STOPPER RING		2					
07	1200-3221-07	BUSHING		4					
08	9321-2120-31	SOLENOID FUR BRUSH (SL11)		1					
09	1144-6220-01	CLUTCH FER BRUSH (CL20)	RP	1					
10	1300-3352-14	GEAR 32T		1					
11	1144-4332-02	PLATE SPRING	RP	2					
12	1144-4333-01	TERMINAL		2					
13	1300-3312-13	GEAR 15T		1					
14	1200-1342-03	WASHER		2					
15	1179-0368-01	FUR BRUSH UNIT	RP	1					

INDEX	PART NO.	PART NAME	REC	QTY	SFIX

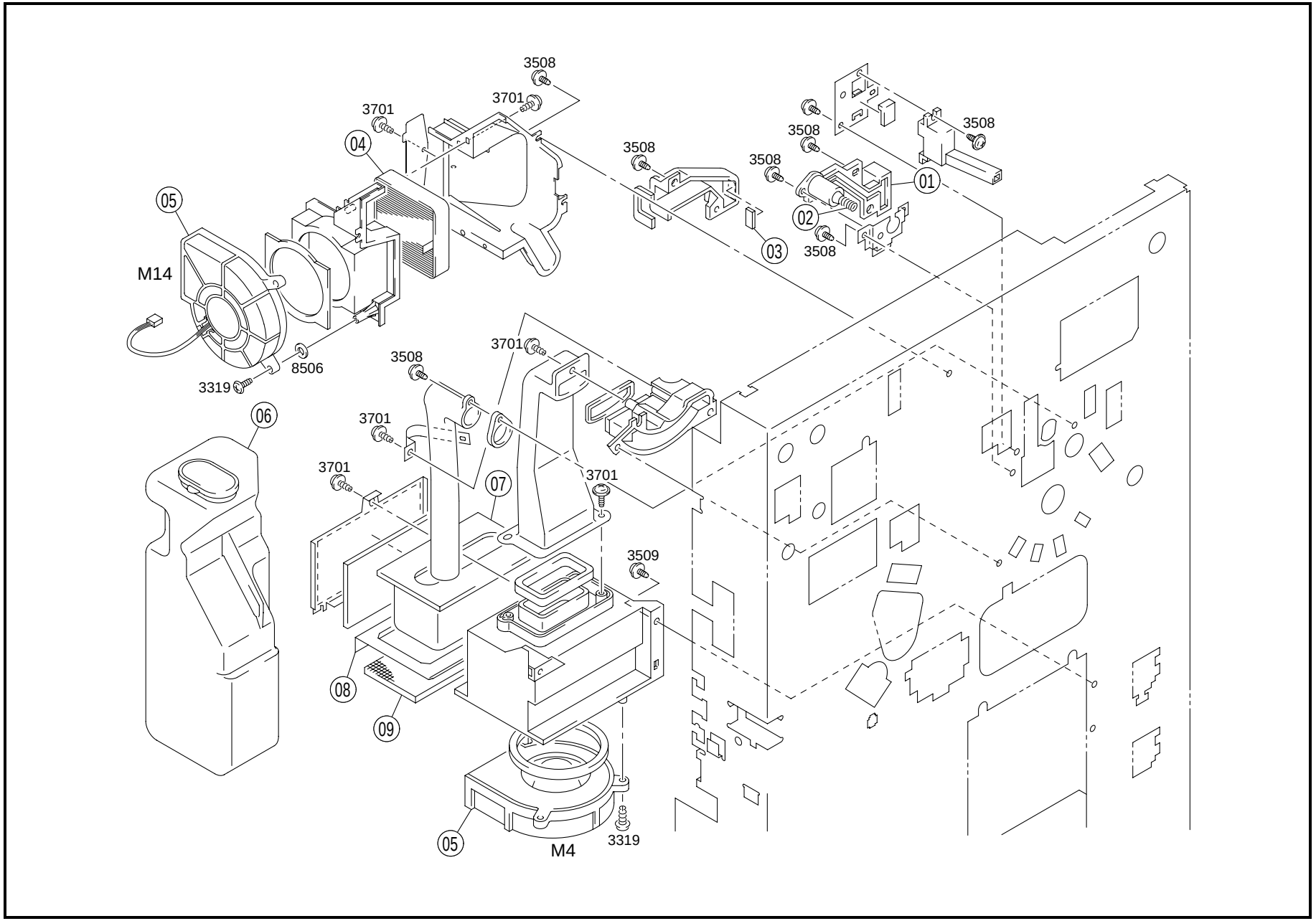
3508
3701
3701
04
05
M14
3508
3508
3508
3508
01
02
03
3508
3701
3508
8506
3319
06
3701
3701
07
3701
3509
08
09
05
M4
3319

INDEX	PART NO.	PART NAME	REC	QTY	INDEX	PART NO.	PART NAME	REC	QTY
01	1144-5554-01	HOLDER		1					
02	1400-1122-08	PRESSURE SPRING		1					
03	1179-2065-01	SEAL		1					
04	1144-2054-01	OZONE FILTER	RP	1					
05	9313-1510-51	FAN MOTOR (M4.14)		2					
06	1179-0162-03	BOTTLE ASSY	RP	1					
07	1144-2064-01	FILTER	RP	1					
08	1144-2078-01	SHIELD PLATE		1					
09	1074-5136-02	OZONE FILTER	RP	1					

INDEX	PART NO.	PART NAME	REC	QTY	SFIX

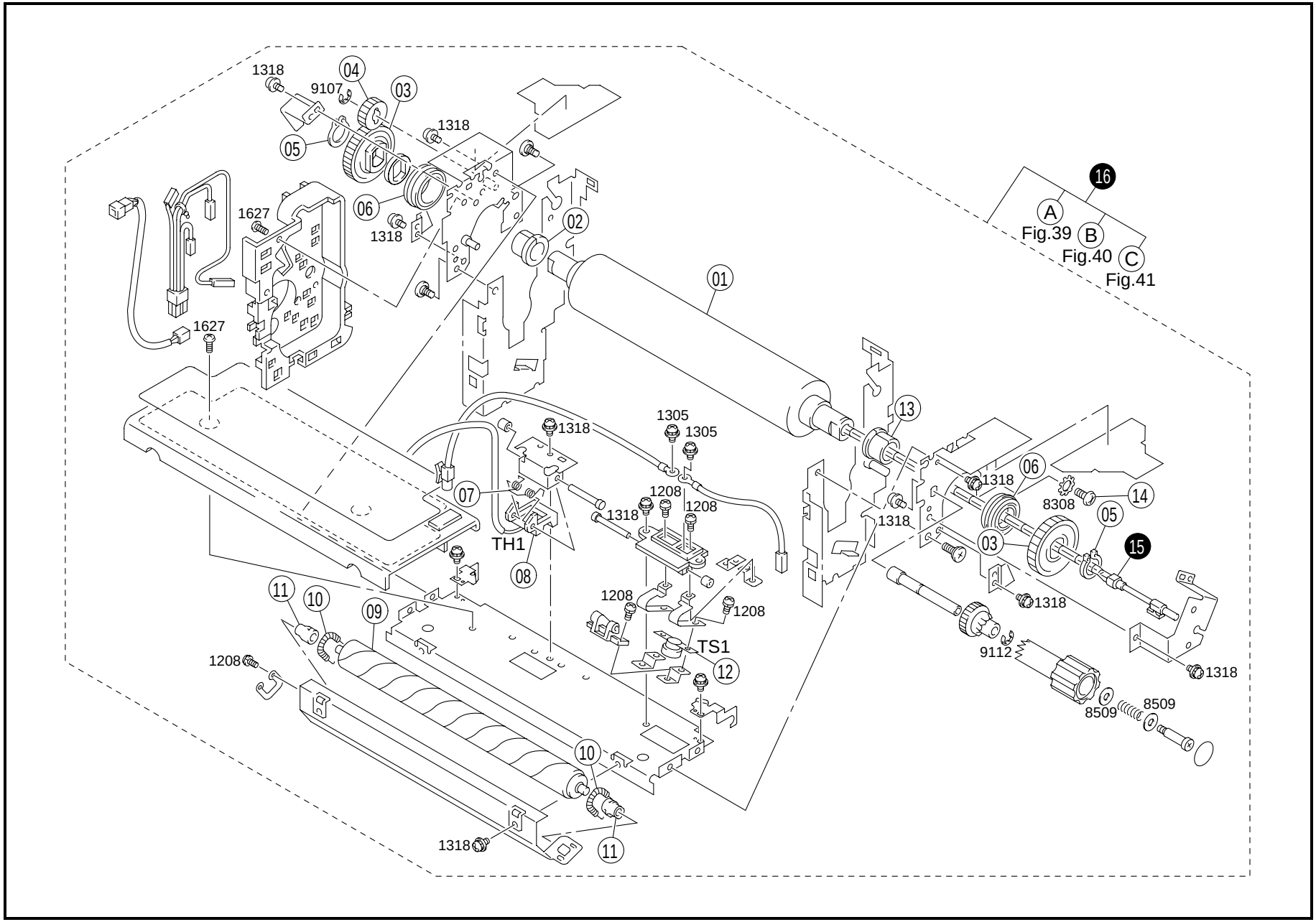
1318
9107
04
03
1318
05
06
1627
1318
02
01
16
A
Fig.39
B
Fig.40
C
Fig.41
1627
13
1305
1305
1318
07
1208
1208
1318
TH1
08
1318
06
8308
14
05
03
15
1318
11
10
09
1208
1208
TS1
12
9112
1318
1208
8509
8509
10
1318
11

INDEX	PART NO.	PART NAME			REC	QTY	INDEX	PART NO.	PART NAME	REC	QTY
01	1179-5746-01	FUSING ROLLER			RP	1					
02	1144-5748-02	BUSHING			RP	1					
03	1144-5749-01	GEAR 56T				2					
04	1144-5809-02	GEAR 26T				1					
05	1500-2610-03	C-RING				2					
06	1144-5752-02	BALL BEARING			RP	2					
07	1061-5542-01	TORSION SPRING				1					
08	9372-2510-62	THERMISTOR	UPPER	(TH1)	RP	1					
09	1061-5545-01	CLEANING ROLLER			RP	1					
10	1400-2522-06	TENSION SPRING				2					
11	1144-5771-02	BUSHING				2					
12	1154-6312-02	THERMISTAT	UPPER	(TS1)	RP	1					
13	1144-5750-02	BUSHING			RP	1					
14	1100-1331-07	SHOULDER SCREW				1					

INDEX	PART NO.	PART NAME			REC	QTY	SFIX
15	1154-6511-01	TUBE LAMP	UPPER	(H1)	RP	1	211
15	1154-6515-01	TUBE LAMP	UPPER	(H1)	RP	1	011
15	1154-6517-01	TUBE LAMP	UPPER	(H1)	RP	1	311, 313
16	1179-0321-02	FUSING UNIT				1	011
16	1179-0322-02	FUSING UNIT				1	211
16	1179-0323-02	FUSING UNIT				1	311, 313

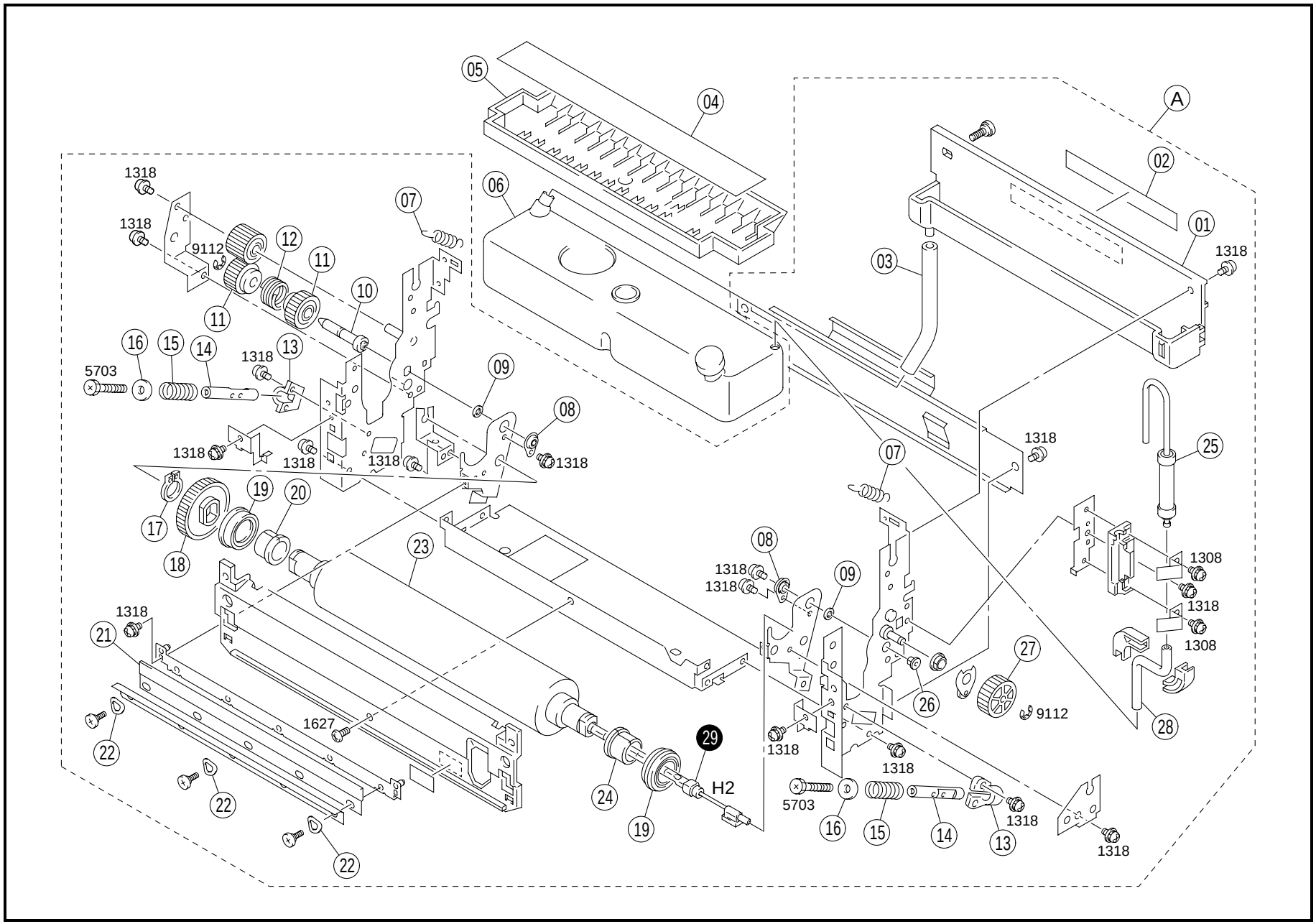
A
01
02
03
04
05
06
07
08
09
10
11
12
13
14
15
16
17
18
19
20
21
22
23
24
25
26
27
28
29
H2
1318
1308
1627
5703
9112

INDEX	PART NO.	PART NAME	REC	QTY
01	1154-5835-01	HOUSING		1
02	1144-7310-01	LABEL CAUTION-HOT		1
03	1154-5840-02	TUBE		1
04	1144-5842-01	FILTER	RP	1
05	1154-5843-01	OIL PAN		1
06	1154-5826-02	BOTTLE		1
07	1144-5801-01	TENSION SPRING		2
08	1039-3623-01	BUSHING		2
09	1179-5775-01	WASHER		2
10	1144-5716-13	SHAFT		1
11	1144-5735-01	GEAR 31T		2
12	1061-5534-01	CLUTCH SPRING		1
13	1154-5780-01	HOLDER		2
14	1154-5781-01	SHAFT		2
15	1179-5779-01	PRESSURE SPRING		2
16	1200-1531-01	WASHER		2
17	1500-2610-03	C-RING		1
18	1144-5749-01	GEAR 56T		1
19	1144-5752-02	BALL BEARING	RP	2
20	1144-5748-02	BUSHING	RP	1
21	1154-5852-01	CLEANING BLADE	RP	1
22	1500-2660-12	WAVE WASHER		3
23	1179-5747-01	FUSING ROLLER	RP	1
24	1144-5750-02	BUSHING	RP	1
25	1144-0269-01	VALVE ASSY		1
26	1144-5713-12	AXLE		1
27	1144-5836-01	GEAR 35T		1
28	1144-5827-02	PIPE		1

INDEX	PART NO.	PART NAME	REC	QTY	SFIX
29	1154-6512-01	TUBE LAMP LOWER (H2)	RP	1	211
29	1154-6516-01	TUBE LAMP LOWER (H2)	RP	1	011
29	1154-6518-01	TUBE LAMP LOWER (H2)	RP	1	311, 313

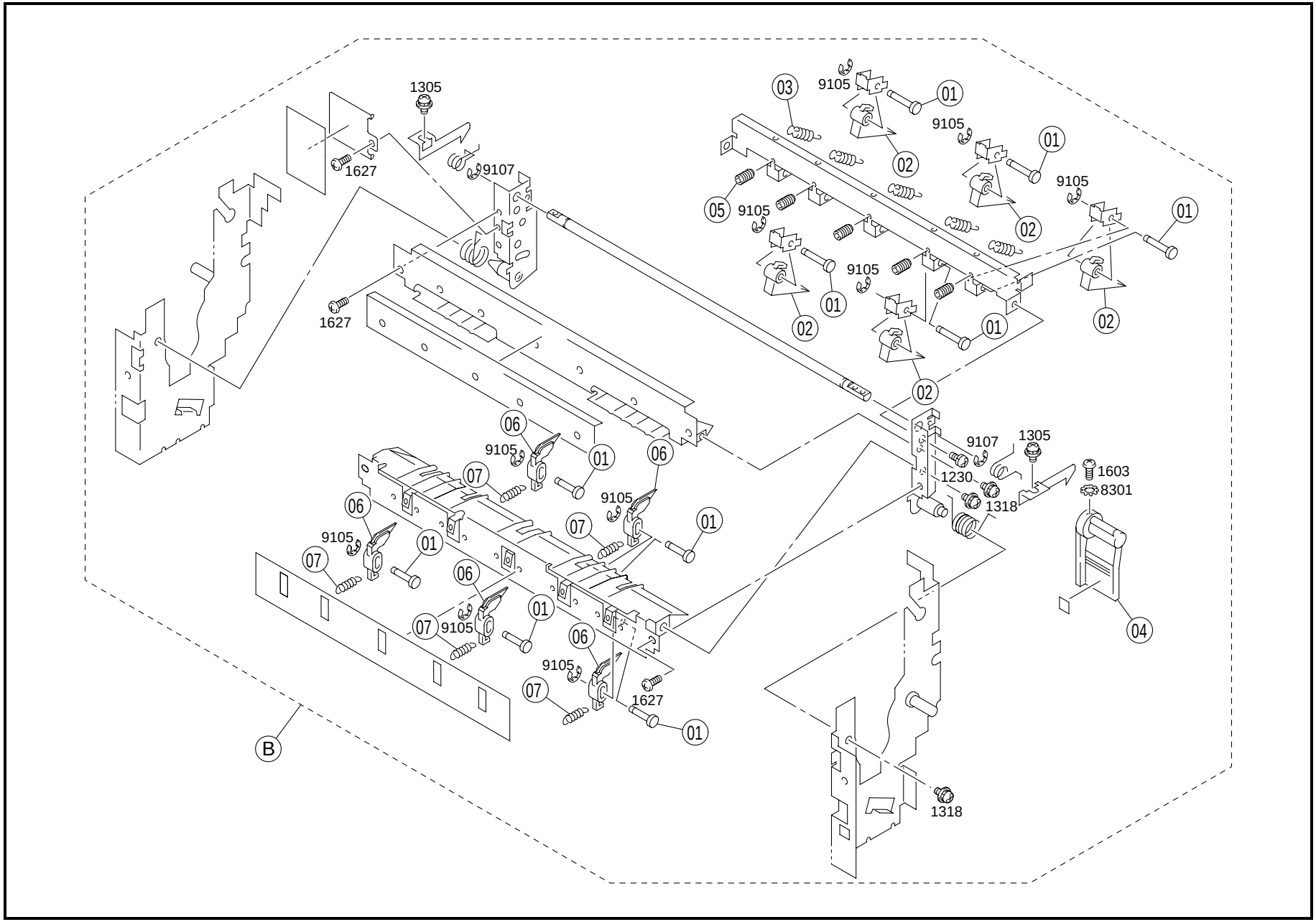
1305
1627
9107
1627
03
9105
01
02
05
9105
01
02
9105
01
02
9105
01
02
01
02
06
9105
01
06
07
9105
01
06
9105
01
07
07
06
01
07
9105
06
9105
07
1627
01
B
9107
1305
1603
8301
1230
1318
04
1318

INDEX	PART NO.	PART NAME	REC	QTY	INDEX	PART NO.	PART NAME	REC	QTY
01	1200-5241-12	SHAFT		10					
02	1144-5861-01	SEPARATOR	RP	5					
03	1400-2131-18	TENSION SPRING		5					
04	1144-5901-03	HANDLE		1					
05	1154-5865-01	SET SCREW		5					
06	1144-5863-01	SEPARATOR	RP	5					
07	1144-5906-01	TENSION SPRING		5					

INDEX	PART NO.	PART NAME	REC	QTY	SFIX

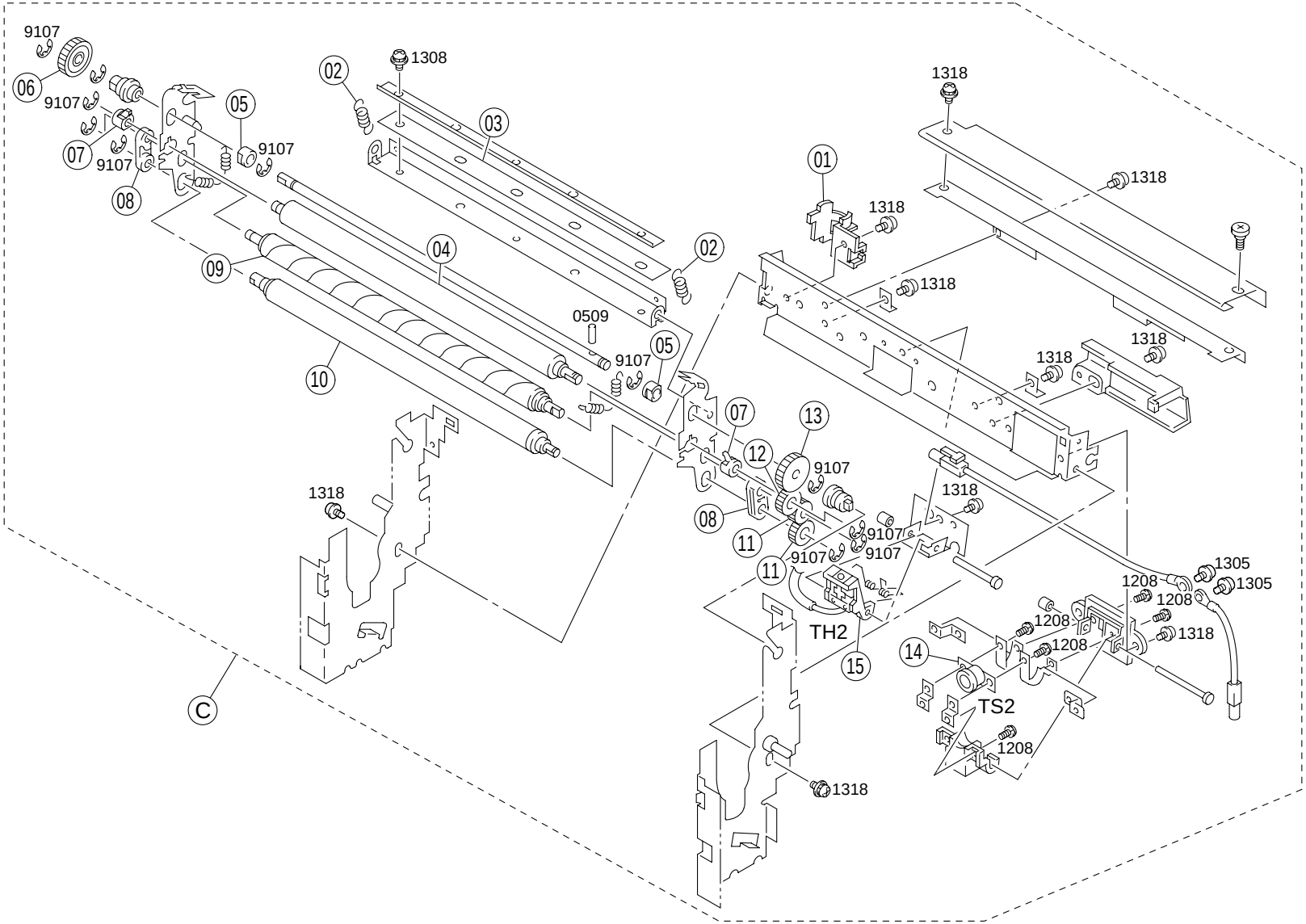
9107
06
9107
07
9107
08
05
9107
02
1308
03
09
04
10
0509
05
9107
02
01
1318
1318
1318
1318
1318
1318
07
13
12
9107
08
11
11
9107
9107
9107
1318
1318
1305
1305
1208
1208
1208
1208
1318
TH2
15
14
TS2
1208
1318
C

INDEX	PART NO.	PART NAME	REC	QTY	INDEX	PART NO.	PART NAME	REC	QTY
01	1154-5728-01	GUIDE		1					
02	1179-5793-01	TENSION SPRING		2					
03	1179-5803-01	BLADE	RP	1					
04	1144-5797-01	ROLLER	RP	1					
05	1144-5811-01	BUSHING		2					
06	1144-5810-01	GEAR 24T		1					
07	1144-5798-12	BUSHING		2					
08	1144-5802-01	BUSHING		2					
09	1144-5799-13	ROLLER	RP	1					
10	1144-5794-02	ROLLER		1					
11	1144-5806-02	GEAR 17T	RP	2					
12	1144-5791-02	GEAR 20T	RP	1					
13	1144-5809-02	GEAR 26T	RP	1					
14	1154-6312-02	THERMISTAT LOWER (TS2)	RP	1					
15	9372-2510-72	THERMISTOR LOWER (TH2)	RP	1					

INDEX	PART NO.	PART NAME	REC	QTY	SFIX

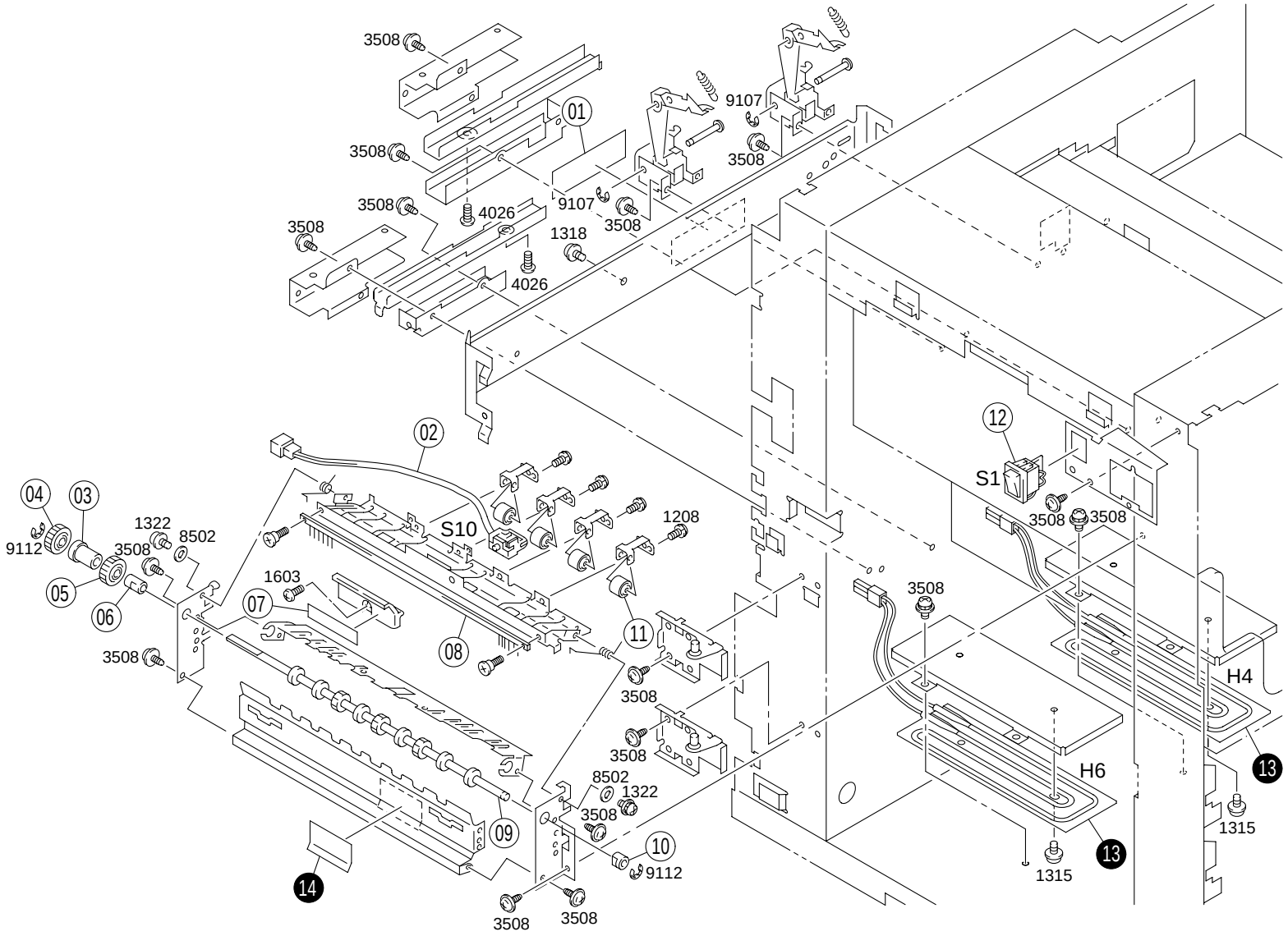
3508
01
9107
3508
3508
4026
9107
3508
3508
1318
4026
02
12
S1
3508
3508
04
03
1322
8502
9112
3508
S10
1208
05
06
1603
07
08
11
3508
3508
3508
8502
1322
3508
09
10
9112
14
3508
3508
H4
H6
13
13
1315
1315

INDEX	PART NO.	PART NAME	REC	QTY	INDEX	PART NO.	PART NAME	REC	QTY
01	1179-7303-02	LABEL		1					
02	9334-2310-11	REED SWITCH PAPER EXIT (S10)		1					
03	1144-5932-01	SLEEVE		1					
04	1300-3122-44	GEAR 20T		1					
05	1300-3132-12	GEAR 24T		1					
06	1144-5927-02	BUSHING		1					
07	1144-7336-01	LABEL L2		1					
08	1179-0753-01	NEUTRALIZING BRUSH		1					
09	1179-5921-01	ROLLER	RP	1					
10	1200-3134-16	BUSHING		1					
11	1038-4701-01	ROLL		4					
12	9332-5510-31	SWITCH POWER (S1)		1					

INDEX	PART NO.	PART NAME	REC	QTY	SFIX
13	1144-6525-01	HEATER (H4.6)		2	311, 313
13	9352-6410-11	HEATER (H4.6)		2	011
13	9352-6510-21	HEATER (H4.6)		2	211
14	1144-7361-01	LABEL		1	011
14	1144-7362-01	LABEL TRAY POSITION		1	211, 311, 313

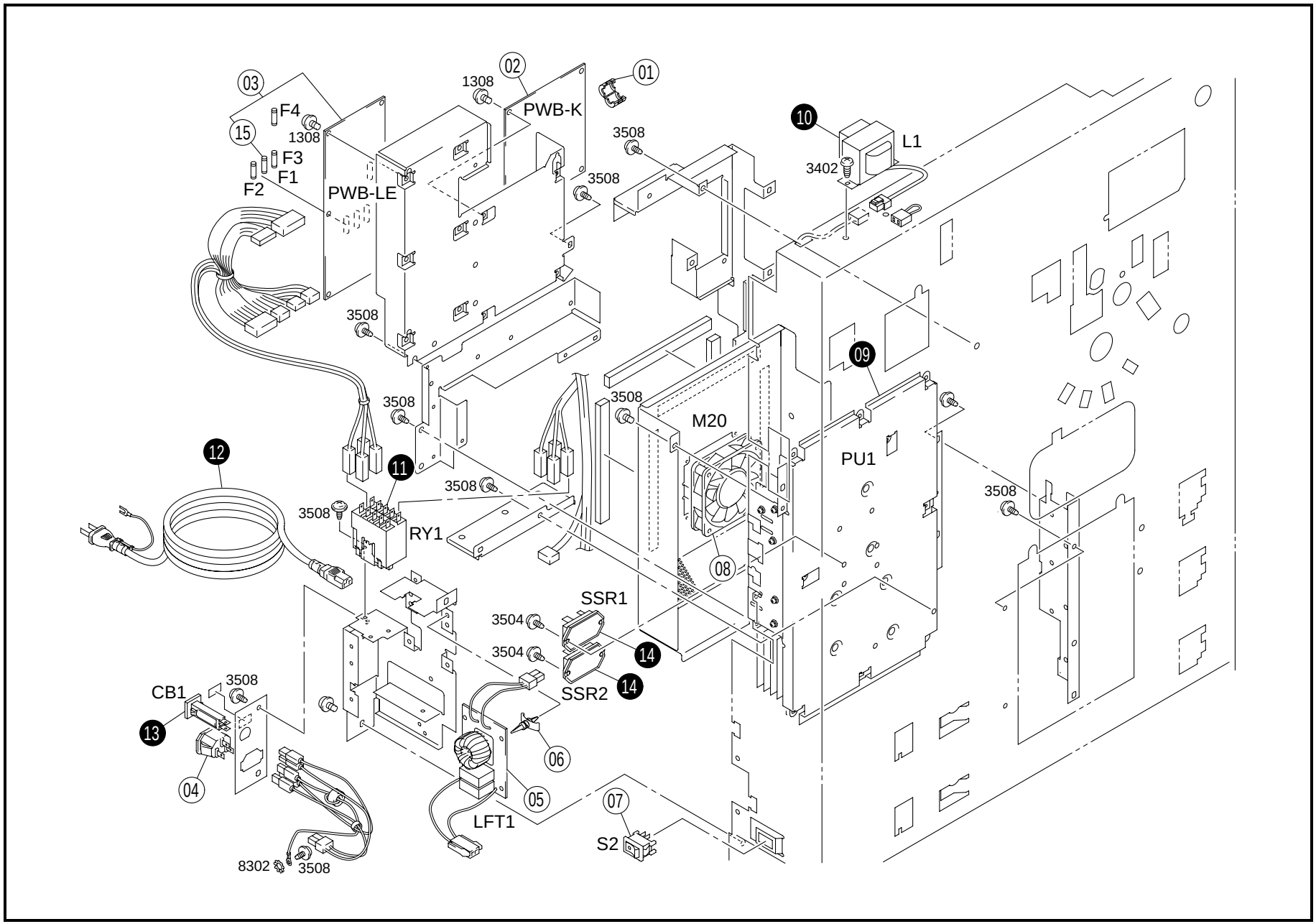
03
F4
1308
15
F3
F1
F2
PWB-LE
02
1308
PWB-K
01
3508
3508
10
L1
3402
3508
3508
09
3508
M20
PU1
12
11
3508
3508
RY1
3508
08
SSR1
3504
3504
14
14
SSR2
CB1
3508
13
04
06
05
07
LFT1
S2
8302
3508

INDEX	PART NO.	PART NAME	REC	QTY	INDEX	PART NO.	PART NAME	REC	QTY
01	9326-1000-91	FERRITE CORE		1					
02	1179-0117-02	PWB ASSY TAKE-UP (PWB-K)	RP	1					
03	1179-0114-02	PWB ASSY POWER (PWB-LE)	RP	1					
04	9383-2510-21	HOLDER		1					
05	1154-0124-02	HARNESS (FLT1)		1					
06	9384-1900-56	PWB SUPPORT 6.35H		4					
07	9332-5310-21	SWITCH PAPER DEHUM. (S2)		1					
08	9313-1000-11	FAN MOTOR POWER (M20)		1					
15	9346-3720-21	FUSE 3A (F1-4)	RP	4					

INDEX	PART NO.	PART NAME	REC	QTY	SFIX
09	1179-6216-02	POWER SUPPLY (PU1)		1	011, 311, 313
09	1179-6217-02	POWER SUPPLY (PU1)		1	211
10	9324-6410-11	COIL (L1)		1	211
11	9341-2210-11	RELAY MAIN (RY1)		1	011, 313
11	9341-2210-11	RELAY MAIN (RY1)		1	311
11	9341-2210-21	RELAY MAIN (RY1)		1	211
12	9381-4810-31	POWER CORD		1	011
12	9381-4911-01	POWER CORD		1	311, 313
13	9346-3320-22	CIRCUIT BREAKER (CB1)		1	011, 311, 313
13	9346-3320-32	CIRCUIT BREAKER (CB1)		1	211
14	9343-4210-21	TRIAC MODULE (SSR1.2)	RP	2	211
14	9343-4310-21	TRIAC MODULE (SSR1.2)	RP	2	011, 311, 313

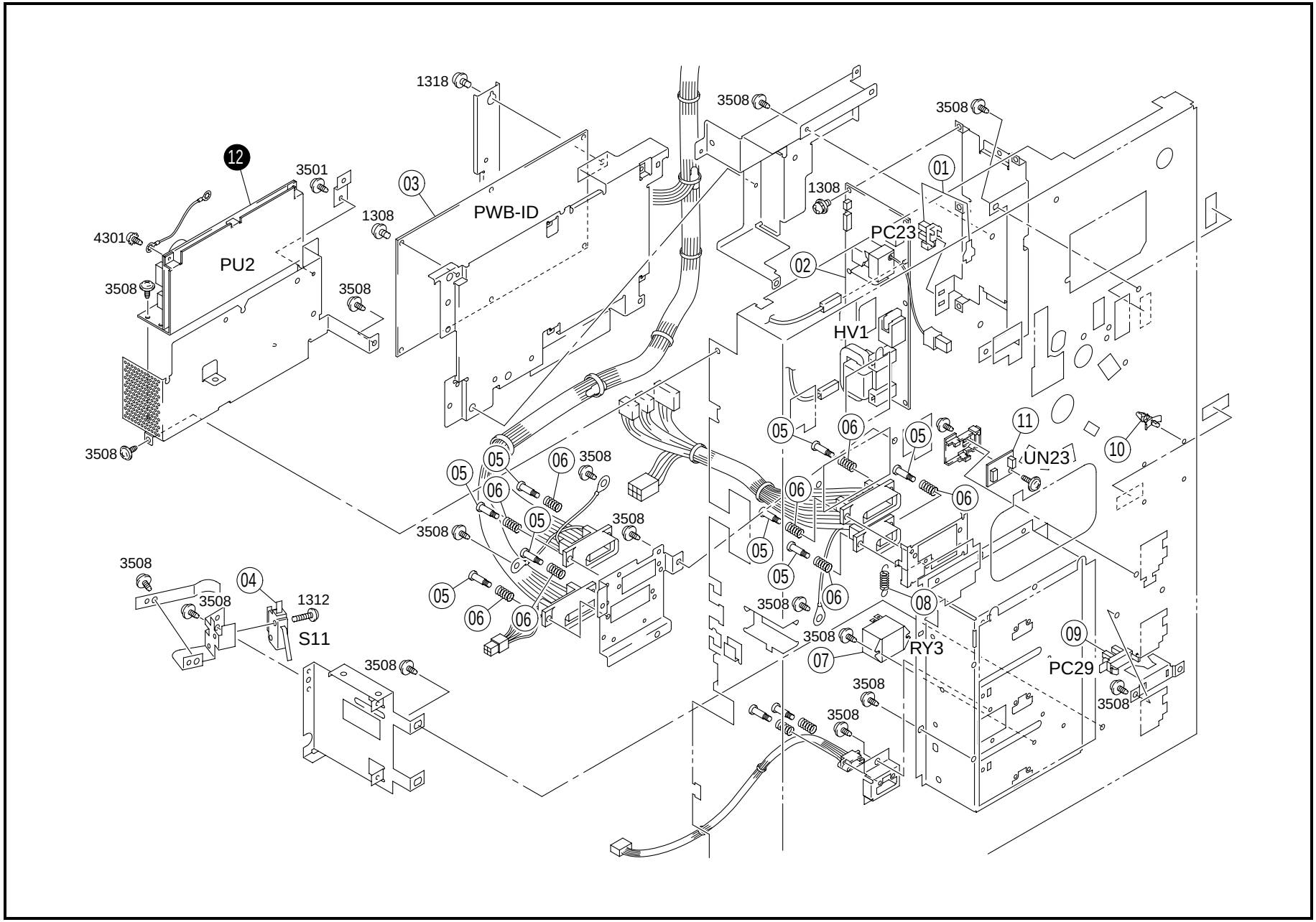
1318
3508
3508
12
3501
03
PWB-ID
1308
01
1308
4301
PU2
PC23
3508
3508
02
HV1
3508
05
06
05
11
10
UN23
05
06
3508
05
06
06
06
3508
3508
05
05
3508
04
1312
3508
05
06
06
3508
06
08
S11
3508
3508
RY3
09
07
PC29
3508
3508
3508

INDEX	PART NO.	PART NAME	REC	QTY
01	4642-0901-01	PHOTO INTERRUPTER DRIVE OFF (PC23)		1
02	1179-6211-01	HV TRANSFORMER (HV1)	RP	1
03	1179-0112-03	PWB ASSY DRIVE (PWB-ID)	RP	1
04	9331-2310-11	MICROSWITCH TONER BOX (S11)		1
05	1100-1334-07	SHOULDER SCREW		8
06	1154-2240-01	PRESSURE SPRING		8
07	9341-2310-11	RELAY DEHUM. (RY3)		1
08	1400-2153-10	TENSION SPRING		1
09	9335-1210-11	PHOTO INTERRUPTER BOX FULL (PC29)		1
10	9384-1900-57	PWB SUPPORT 9.53H		4
11	1144-6703-01	PW BOARD HUMIDITY (UN23)		1

INDEX	PART NO.	PART NAME	REC	QTY	SFIX
12	1144-6290-01	PWB-REGULATOR (PU2)		1	011, 311, 313
12	1144-6291-01	PWB-REGULATOR (PU2)		1	211

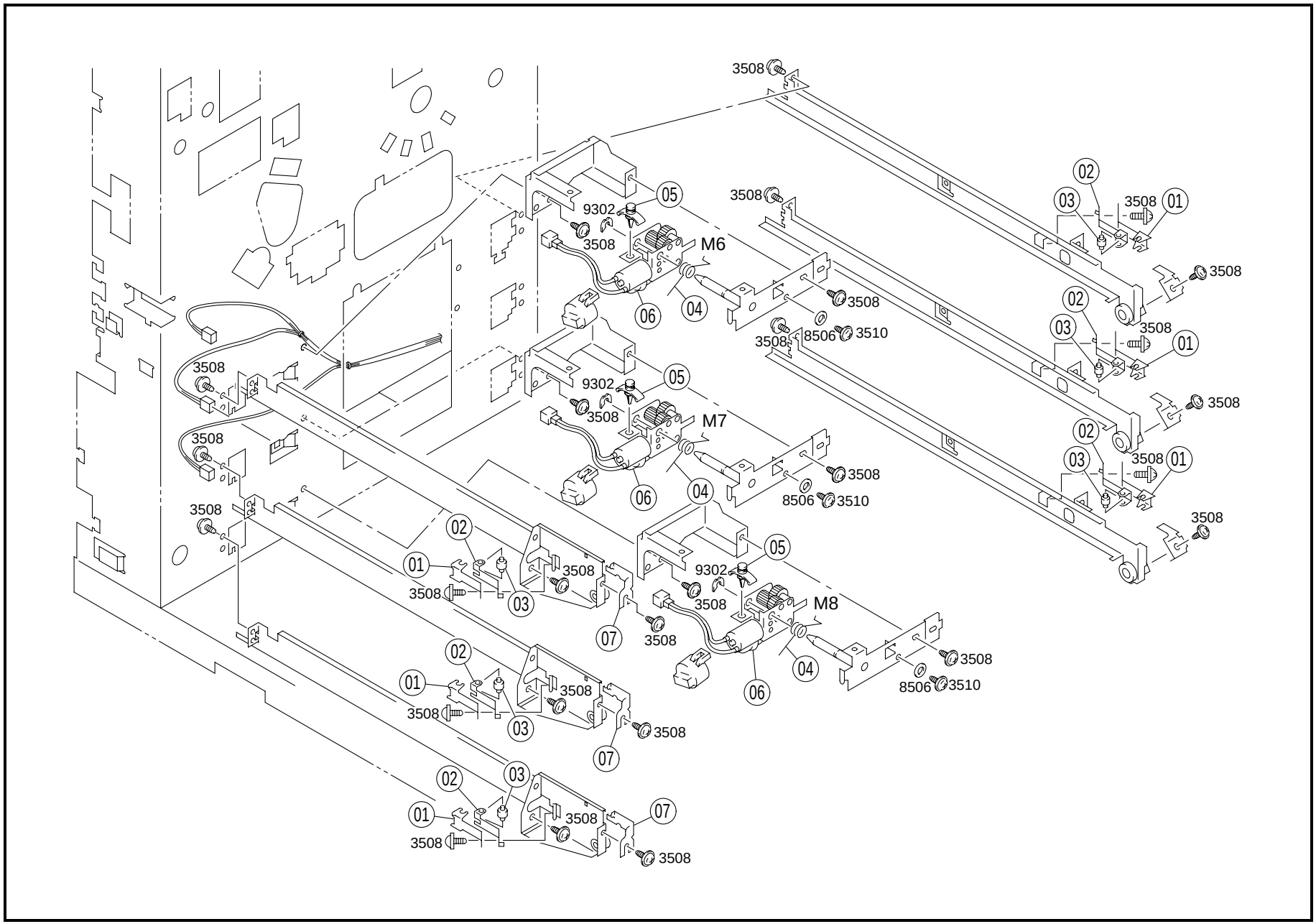
3508
02
03
01
3508
3508
05
9302
3508
M6
06
04
3508
3508
8506
3510
3508
02
03
01
3508
3508
3508
05
9302
3508
M7
06
04
3508
8506
3510
3508
02
03
01
3508
3508
3508
02
01
3508
3508
03
05
9302
3508
M8
07
3508
06
04
3508
8506
3510
02
01
3508
3508
03
3508
07
02
03
01
3508
3508
07
3508

INDEX	PART NO.	PART NAME	REC	QTY	INDEX	PART NO.	PART NAME	REC	QTY
01	1273-2016-01	PLATE SPRING		6					
02	1273-2014-01	HOLDER		6					
03	1273-2017-01	ROLL		6					
04	1273-3102-01	TORSION SPRING		3					
05	9384-1900-61	PWB SUPPORT 6.2H		3					
06	9312-1110-81	MOTOR LIFT-UP (M6.7.8)		3					
07	1273-2036-01	STOPPER		3					

INDEX	PART NO.	PART NAME	REC	QTY	SFIX

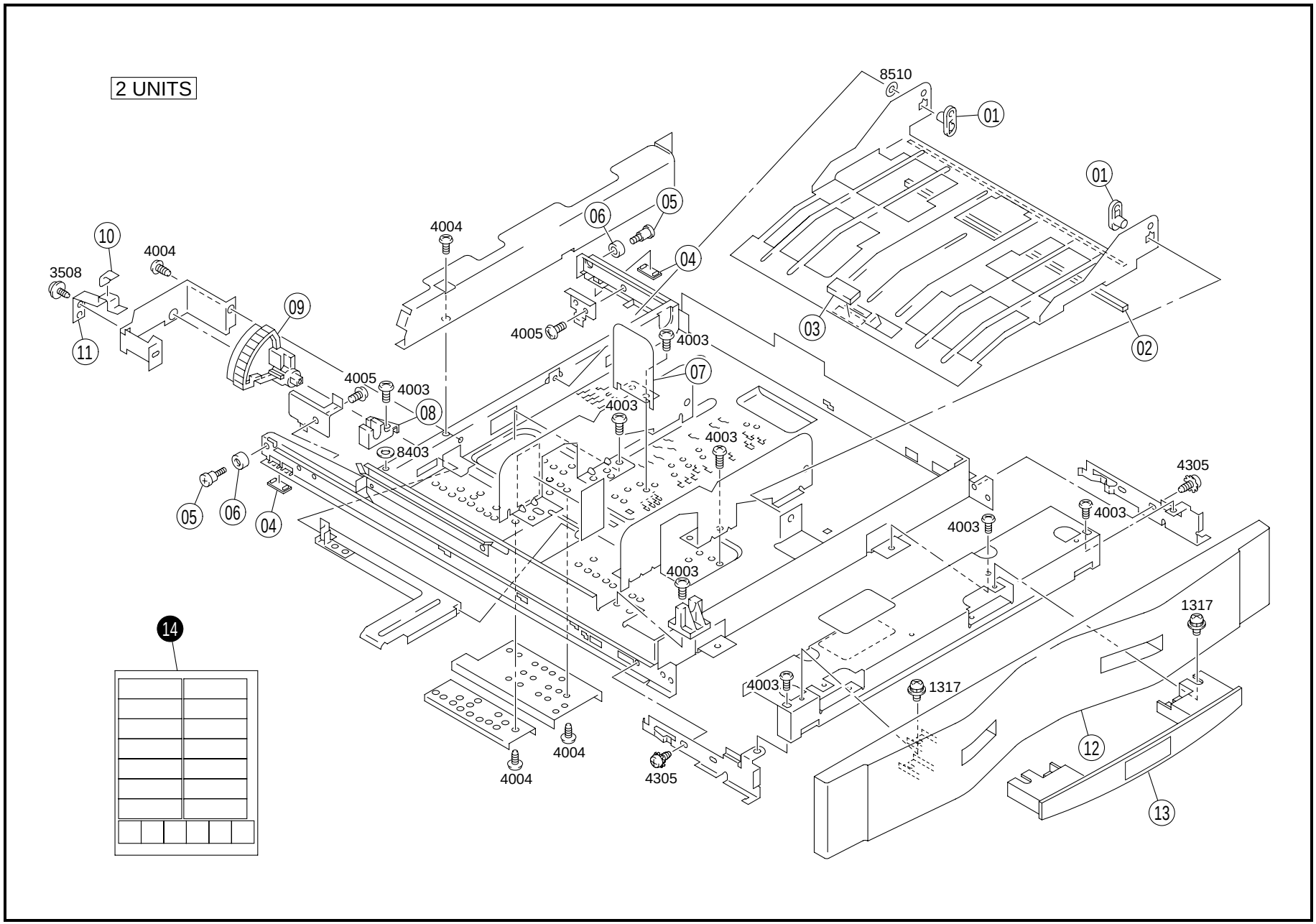
2 UNITS
8510
01
01
02
03
04
05
06
07
08
09
10
11
12
13
14
3508
4004
4004
4005
4005
4003
4003
4003
4003
4003
4003
4003
4004
4004
4305
4305
1317
1317
8403

INDEX	PART NO.	PART NAME	REC	QTY	INDEX	PART NO.	PART NAME	REC	QTY
01	1274-3103-02	HOLD PLATE		4					
02	1053-5423-01	SPONGE		2					
03	1273-3052-01	CORK		2					
04	1273-3055-01	SLIDER		4					
05	1273-3003-01	SHOULDER SCREW		4					
06	1273-3002-01	ROLL		4					
07	1052-3287-01	STOP		2					
08	0931-3002-02	HOLDER		2					
09	1273-3010-02	GEAR		2					
10	1273-3058-01	SEAL		2					
11	1273-3039-01	PLATE SPRING		2					
12	1179-3013-01	COVER		2					
13	1179-3016-02	HANDLE		2					

INDEX	PART NO.	PART NAME	REC	QTY	SFIX
14	1151-7371-01	LABEL		1	011, 211, 313
14	1151-7372-01	LABEL		1	311

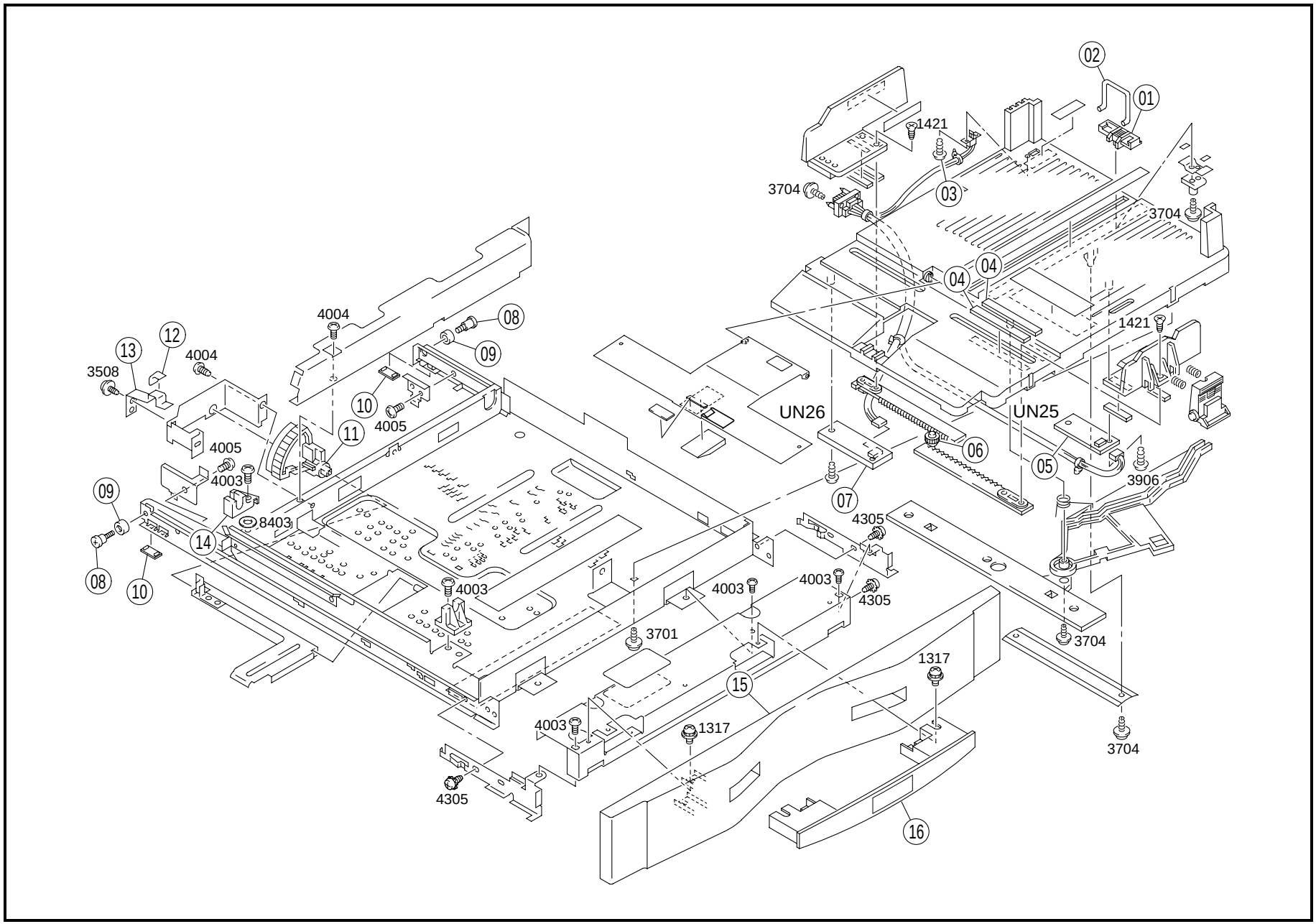
02
01
1421
3704
03
3704
04
04
1421
4004
08
09
12
13
4004
3508
10
4005
11
UN26
UN25
06
05
3906
4005
4003
09
8403
14
07
4305
08
10
4003
4003
4003
4305
3701
3704
1317
15
4003
1317
3704
4305
16

INDEX	PART NO.	PART NAME	REC	QTY	INDEX	PART NO.	PART NAME	REC	QTY
01	0931-3331-02	STOPPER		1					
02	0931-3332-01	STOP BAR		1					
03	0931-3099-01	SCREW		2					
04	0931-3343-01	SPACER		2					
05	1053-6023-02	PW BOARD FD SIZE (UN25)		1					
06	1300-3302-05	GEAR 10T		1					
07	1154-6061-01	UNIT PARTS CD SIZE (UN26)		1					
08	1273-3003-01	SHOULDER SCREW		2					
09	1273-3002-01	ROLL		2					
10	1273-3055-01	SLIDER		2					
11	1273-3010-02	GEAR		1					
12	1273-3058-01	SEAL		1					
13	1273-3039-01	PLATE SPRING		1					
14	0931-3002-02	HOLDER		1					
15	1179-3013-01	COVER		1					
16	1179-3016-02	HANDLE		1					

INDEX	PART NO.	PART NAME	REC	QTY	SFIX

01 - 03 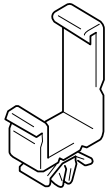	12 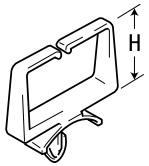	18 	26 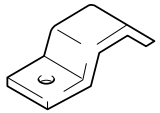	32 	38 	43 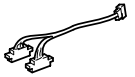	48 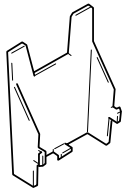
04 - 06 	13 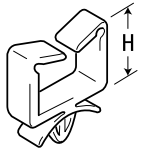	19 - 21 	27 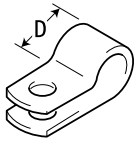	33 , 34 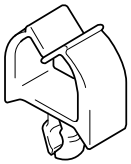	39 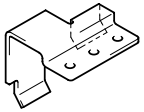	44 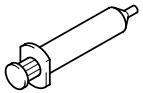	49 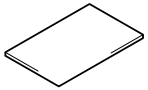
07 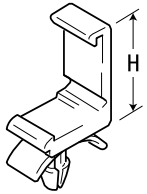	14 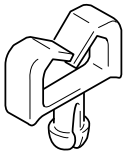	22 , 23 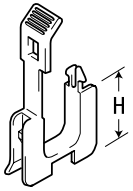	28 , 29 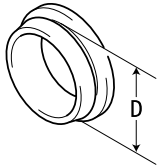	35 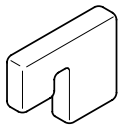	40 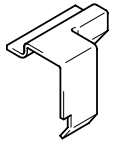	45 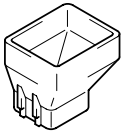	50 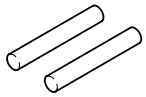 9752-3020-50
08 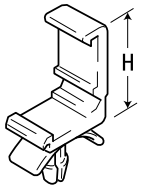	15 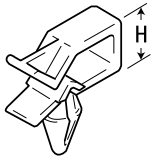	24 	30 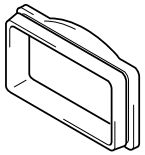	36 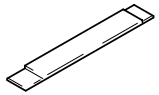	41 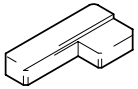	46 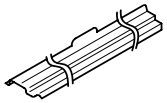	
09 - 11 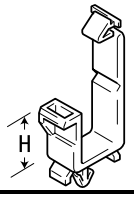	16 , 17 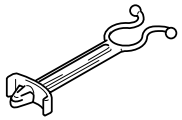	25 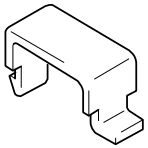	31 	37 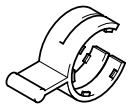	42 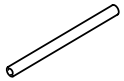	47 	

INDEX	PART NO.	PART NAME	REC	QTY	INDEX	PART NO.	PART NAME	REC	QTY
01	9384-1310-91	WIRING SADDLE 18.5H		81	26	0725-3641-01	WIRING CLAMP		6
02	9384-1311-01	WIRING SADDLE 27H		79	27	9384-1920-61	P-CLIP 6.8D		1
03	9384-1311-21	WIRING SADDLE 16.8H		51	28	0721-4203-12	COLLAR 17D		3
04	9384-1310-11	WIRING SADDLE 5.2H		13	29	0722-4913-01	INSULATING MEMBER		3
05	9384-1211-01	WIRING SADDLE 19.2H		14	30	1038-4006-01	INSULATING MEMBER		2
06	9384-1110-61	WIRING SADDLE 21.5H		16	31	9384-1711-21	CORD CLAMP		3
07	9384-1900-53	WIRING SADDLE 18.7H		4	32	1179-5718-01	RING		10
08	9384-1900-54	WIRING SADDLE 23.0H		4	33	1021-7823-01	CORD CLAMP-WHITE		2
09	9384-1921-01	WIRING SADDLE 14.4H		7	34	9384-1720-41	WIRING SADDLE-BLACK		4
10	9384-1921-21	WIRING SADDLE 15.2H		18	35	1144-7907-01	JIG SAFETY	RP	1
11	9384-1921-11	WIRING SADDLE 9.2H		3	36	1144-7910-01	JIG TRANSFER ADJUSTING	RP	1
12	9384-1310-81	WIRING SADDLE 6.4H		46	37	4002-7903-01	JIG	RP	1
13	9384-1900-64	WIRING SADDLE 13.0H		1	38	1179-7901-01	JIG	RP	1
14	9384-1110-41	WIRING SADDLE 4.0H		4	39	1144-7902-02	JIG SLIDER-FNT	RP	1
15	9384-1820-31	WIRING SADDLE 8.0H		10	40	1144-7903-02	JIG SLIDER-RR	RP	1
16	9384-1310-51	WIRING SADDLE		9	41	1144-7904-02	JIG ATDC ADJUSTING	RP	1
17	9384-1820-61	LEAD CLAMPER		2	42	1144-7803-01	JIG RUBBER TUBE	RP	1
18	9384-1900-52	SO CLIP 6.35H		7	43	1154-6810-01	HARNESS	RP	1
19	9384-2610-11	EDGE COVER 8.5H		1	44	1144-7801-01	JIG	RP	1
20	9384-2800-36	EDGE COVER 15.0H		11	45	1144-7802-01	JIG STARTER	RP	4
21	9384-2010-21	EDGE COVER 8.5H		44	46	1144-7908-01	REGULATING COVER	RP	4
22	9384-2010-31	EDGE COVER 15.4H		12	47	1144-7909-01	JIG COLLECTING BOX	RP	1
23	9384-2010-41	EDGE COVER 25.0H		5	48	1156-7501-01	HOLDER		1
24	9384-1311-11	CABLE TIE 104L		6	49	1179-0752-02	JIG MEMORY CARD	RP	1
25	1053-4432-01	CORD CLAMP		2	50	9752-3020-50	PIN	RP	1

INDEX	PART NO.	PART NAME	REC	QTY	SFIX

INDEX	PART NO.	PART NAME	ILLUST
0208 0210 0214 0222	9754-3010-08 9754-3012-08 9754-3020-08 9754-3022-08	SPRING ROLL PIN	
0502 0508 0509 0526	9752-3012-50 9752-2010-50 9752-2012-50 9752-2016-50	PIN	
1122 1172	9642-0340-13 9642-0312-13	SCREW	
1208 1210 1212 1218 1230 1237	9644-0306-13 9644-0308-13 9644-0310-13 9644-0320-13 9644-0408-13 9644-0416-13	SCREW	
1302 1304 1305 1308 1309 1312 1313 1315 1317 1318 1320 1321 1322 1323 1331 1351 1367 1385	9646-0305-13 9646-0306-07 9646-0306-13 9646-0308-13 9646-0310-13 9646-0316-13 9646-0320-13 9646-0406-13 9646-0408-07 9646-0408-13 9646-0410-13 9646-0412-13 9646-0414-13 9646-0416-13 9646-0325-13 9646-0308-21 9646-0416-07 9646-0340-13	SCREW	

INDEX	PART NO.	PART NAME	ILLUST
1409 1421	9648-0308-21 9648-0308-13	SCREW	
1602 1603 1607 1608 1612 1623 1627 1634 1638 1647 1655 1663 1684	9654-0305-07 9654-0306-01 9654-0306-13 9654-0308-01 9654-0310-01 9654-0408-01 9654-0408-13 9654-0304-13 9654-0305-13 9654-0305-01 9654-0304-01 9654-0406-13 9654-0404-13	SCREW	
1715	9737-0306-07	SCREW	
1803	9659-0408-01	SCREW	
2703 2706 2711 2713	9654-0406-14 9654-0408-14 9654-0410-14 9654-0306-14	SCREW	
3104	9656-0308-13	TAPPING SCREW	
3204 3211	9657-0308-13 9657-0314-07	TAPPING SCREW	
3303 3319	9732-0306-13 9732-0412-13	TAPPING SCREW	

INDEX	PART NO.	PART NAME	ILLUST
3402 3403 3410	9733-0306-13 9733-0308-13 9733-0408-13	TAPPING SCREW	
3501 3504 3505 3506 3508 3509 3510 3523 3538	9735-0306-13 9735-0308-13 9735-0310-13 9735-0406-13 9735-0408-13 9735-0410-13 9735-0412-13 9735-0416-13 9735-0408-14	TAPPING SCREW	
3701 3703 3704 3705 3706 3709 3712 3726 3803	9739-0408-13 9739-0412-13 9739-0308-13 9739-0306-13 9739-0408-07 9739-0310-13 9739-0406-13 9739-0408-14 9762-2050-07	TAPPING SCREW	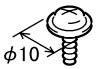
3906 3907 3920	9742-0306-13 9742-0308-13 9742-0408-14	TAPPING SCREW	
4001 4003 4004 4005 4020 4024 4025 4026	9743-0408-01 9743-0410-07 9743-0408-07 9743-0408-13 9743-0408-14 9743-0410-14 9743-0306-14 9743-0410-13	TAPPING SCREW	
4301 4305	9770-0306-13 9770-0408-13	TAPPING SCREW	

INDEX	PART NO.	PART NAME	ILLUST
4401	9771-0414-14	TAPPING SCREW	
5128	9670-0425-08	BOLT	
5703	9734-0420-13	BOLT	
7103 7104 7107 7124 7203	9684-0306-08 9684-0308-08 9684-0406-08 9684-0310-08 9686-0406-08	SET SCREW	
8107	9710-0400-13	SPRING WASHER	
8301 8302 8308	9712-0300-13 9712-0400-13 9712-0600-13	WASHER	
8403 8406 8418 8501 8502 8506 8509 8510	9715-0400-01 9715-0600-01 9715-0300-13 9716-0300-01 9716-0300-07 9716-0400-01 9716-0500-01 9716-0600-01	WASHER	
9104 9105 9107 9112 9115	9721-0250-01 9721-0300-01 9721-0400-01 9721-0600-01 9721-0800-01	RETAINING RING	

INDEX	PART NO.	PART NAME	ILLUST
9301 9302 9303	1066-1151-01 4425-3001-01 4425-3002-01	RETAINING RING	

INDEX	PART NO.	PART NAME	ILLUST

PART NO.	FIG.	INDEX	QTY		PART NO.	FIG.	INDEX	QTY		PART NO.	FIG.	INDEX	QTY		PART NO.	FIG.	INDEX	QTY	
0704-5401-01	24	06	4		1075-0130-02	24	12	1		1144-0169-01	21	11	2		1144-2516-02	09	29	1	
0721-4203-12	48	28	3		1075-2568-01	26	19	1		1144-0269-01	39	25	1		1144-2517-01	09	18	1	
0722-4913-01	48	29	3		1075-3318-02	25	15	1		1144-0357-01	34	34	1		1144-2518-01	09	22	1	
0725-3641-01	48	26	6		1075-3353-03	24	24	1		1144-0358-01	34	17	1		1144-2532-02	09	11	1	
0818-7319-01	02	37	1		1075-3354-02	24	09	1		1144-0753-01	19	16	2		1144-2535-02	09	12	1	
0931-3002-02	46	08	2		1075-3355-02	24	05	1		1144-0753-01	21	13	2		1144-2536-01	09	09	1	
0931-3002-02	47	14	1		1075-3356-02	25	14	1		1144-0756-01	20	01	1		1144-2537-02	09	14	1	
0931-3026-01	27	05	1		1075-3359-01	24	13	2		1144-0757-01	18	01	2		1144-2545-01	09	28	1	
0931-3026-01	28	21	1		1075-3360-01	24	17	1		1144-0757-01	20	02	1		1144-2546-01	09	27	1	
0931-3026-01	29	08	1		1075-3361-01	24	18	1		1144-0761-01	25	01	1		1144-2576-02	08	13	1	
0931-3027-01	27	06	1		1075-3363-01	25	27	1		1144-0762-02	23	20	1		1144-2577-01	08	23	1	
0931-3027-01	28	20	1		1075-3364-01	25	09	1		1144-0763-02	23	06	1		1144-2578-01	08	24	1	
0931-3027-01	29	09	1		1075-3387-01	24	16	2		1144-0764-01	27	22	1		1144-2579-01	08	27	1	
0931-3099-01	47	03	2		1075-3388-01	24	14	1		1144-0764-01	28	06	1		1144-2584-01	08	15	1	
0931-3331-02	47	01	1		1075-3577-02	26	32	1		1144-0764-01	29	07	1		1144-2592-01	08	20	1	
0931-3332-01	47	02	1		1075-7821-01	01	29	2		1144-0765-01	27	04	1		1144-2594-01	08	21	1	
0931-3343-01	47	04	2		1076-2541-01	08	05	1		1144-0765-01	28	05	1		1144-2595-01	08	26	1	
1021-7823-01	48	33	2		1076-2904-02	26	18	1		1144-0765-01	29	05	1		1144-3022-01	26	07	1	
1033-4402-01	22	11	1		1076-3906-01	26	23	1		1144-1002-01	03	18	1		1144-3023-01	26	08	1	
1033-4402-01	25	05	4		1076-4006-01	10	14	2		1144-1003-02	05	02	1		1144-3028-01	26	13	1	
1033-4402-01	27	02	3		1077-5805-01	25	03	3		1144-1004-17	02	19	1		1144-3057-01	27	27	1	
1033-4402-01	28	02	3		1080-1401-03	04	05	2		1144-1021-02	01	18	1		1144-3058-01	26	26	1	
1033-4402-01	29	02	3		1100-1202-03	11	11	1		1144-1023-02	01	11	1		1144-3062-02	27	21	1	
1033-4402-01	32	12	2		1100-1330-09	31	10	1		1144-1026-01	02	28	1		1144-3067-03	26	29	1	
1033-4402-01	34	25	1		1100-1331-07	38	14	1		1144-1030-03	02	30	1		1144-3068-01	26	05	2	
1033-4402-01	36	06	2		1100-1334-07	44	05	8		1144-1036-06	02	29	1		1144-3074-01	27	24	1	
1036-5609-02	23	02	1		1131-4074-01	10	17	1		1144-1037-04	02	27	1		1144-3074-01	28	23	1	
1038-4006-01	48	30	2		1136-0162-01	25	26	1		1144-1038-02	02	23	1		1144-3074-01	29	30	1	
1038-4701-01	42	11	4		1136-1030-02	02	20	1		1144-1039-01	02	25	2		1144-3080-01	17	04	1	
1038-4903-02	10	05	1		1136-5774-01	25	04	1		1144-1040-03	02	22	4		1144-3080-01	30	37	1	
1038-4909-01	10	12	1		1138-1120-12	02	01	3		1144-1041-02	02	26	1		1144-3084-01	24	01	2	
1039-3623-01	08	17	3		1138-1440-01	03	08	2		1144-1048-01	02	03	1		1144-3090-01	26	20	1	
1039-3623-01	09	16	2		1138-1525-01	04	02	2		1144-1049-01	02	16	2		1144-3095-01	26	25	1	
1039-3623-01	39	08	2		1139-0156-02	02	24	1		1144-1051-14	02	31	1		1144-3096-01	27	13	2	
1052-3287-01	46	07	2		1139-1039-01	05	01	1		1144-1052-02	02	18	1		1144-3096-01	28	12	2	
1052-7214-01	02	36	1		1139-1701-04	01	03	1		1144-1061-01	03	03	1		1144-3096-01	29	17	2	
1052-7257-01	07	06	2		1139-1702-02	01	02	1		1144-1062-01	03	05	1		1144-3097-01	25	24	1	
1053-1324-01	01	16	4		1139-1703-03	01	07	3		1144-1108-02	05	04	1		1144-3097-01	27	23	2	
1053-3103-01	24	23	2		1139-1704-14	01	06	1		1144-1110-01	02	09	1		1144-3097-01	28	22	2	
1053-3869-01	01	14	1		1139-1705-01	01	05	2		1144-1318-01	03	21	1		1144-3097-01	29	29	2	
1053-4422-01	26	10	8		1139-1706-01	01	09	1		1144-1418-01	04	04	4		1144-3103-01	25	02	1	
1053-4432-01	48	25	2		1139-1722-02	05	11	1		1144-1421-01	04	03	4		1144-3115-01	25	25	1	
1053-5423-01	46	02	2		1139-1724-01	05	10	1		1144-1505-02	04	07	1		1144-3118-01	24	11	1	
1053-6023-02	47	05	1		1139-1725-01	05	08	1		1144-1511-01	03	15	2		1144-3124-01	27	10	1	
1054-4204-01	24	02	2		1139-1904-02	01	24	2		1144-1639-02	03	14	1		1144-3134-01	25	23	1	
1054-4339-01	09	04	1		1139-1905-01	01	26	1		1144-1649-01	03	22	1		1144-3154-01	24	10	1	
1061-0759-01	34	21	2		1139-1906-01	01	25	1		1144-1650-01	03	07	1		1144-3155-01	24	21	1	
1061-2553-01	09	10	1		1139-1907-01	01	01	2		1144-1652-01	03	23	1		1144-3202-01	29	13	1	
1061-2564-01	09	13	1		1139-1909-01	01	28	1		1144-1655-01	03	02	4		1144-3219-02	29	10	1	
1061-4553-02	30	06	1		1139-1915-02	01	27	1		1144-1657-02	03	04	1		1144-3221-01	29	14	2	
1061-5534-01	39	12	1		1139-3102-01	26	06	2		1144-1699-01	01	04	1		1144-3222-01	29	12	1	
1061-5542-01	38	07	1		1139-3127-01	26	04	1		1144-1703-01	03	16	1		1144-3505-03	35	06	1	
1061-5545-01	38	09	1		1139-3127-01	35	12	1		1144-1704-01	03	19	1		1144-3511-02	35	05	1	
1061-5706-01	30	23	1		1139-3131-01	26	03	1		1144-1705-01	03	06	2		1144-3522-01	30	19	1	
1061-5707-01	08	16	1		1139-3131-01	35	17	1		1144-1706-01	02	07	2		1144-3523-02	30	08	1	
1065-1360-01	01	13	1		1139-3147-01	26	02	1		1144-1707-01	02	08	2		1144-3524-01	30	26	1	
1065-1408-01	04	06	2		1139-3346-02	25	19	1		1144-2028-15	07	14	1		1144-3525-02	35	13	1	
1065-2853-01	30	20	1		1139-3348-02	25	21	1		1144-2029-03	01	22	1		1144-3529-02	30	43	1	
1065-5106-01	19	13	2		1139-3369-01	25	11	2		1144-2030-01	01	21	1		1144-3801-03	26	30	1	
1065-5106-01	21	12	2		1139-3370-01	25	22	1		1144-2040-14	17	01	1		1144-3802-03	26	22	1	
1065-5106-01	23	08	2		1139-5205-01	19	17	2		1144-2044-01	10	09	1		1144-3805-02	26	34	1	
1065-5106-01	36	03	3		1139-5205-01	21	16	2		1144-2054-01	37	04	1		1144-3806-01	26	33	1	
1067-1404-01	03	09	2		1139-5211-01	19	03	2		1144-2064-01	37	07	1		1144-3807-01	26	09	1	
1067-2566-01	09	25	1		1139-5211-01	21	02	2		1144-2078-01	37	08	1		1144-4004-01	10	02	1	
1067-3517-01	23	21	1		1139-5246-01	19	05	2		1144-2097-01	02	32	1		1144-4013-01	10	16	1	
1074-0161-01	23	18	1		1139-5246-01	21	05	2		1144-2501-01	09	05	1		1144-4015-01	10	13	1	
1074-3986-01	09	06	2		1139-5730-01	14	02	2		1144-2504-12	08	01	1		1144-4020-01	10	04	1	
1074-4214-01	23	16	2		1144-0117-02	23	11	1		1144-2506-14	08	09	1		1144-4023-01	10	07	1	
1074-5114-01	26	15	2		1144-0151-02	10	18	1		1144-2508-01	08	07	1		1144-4303-01	30	14	1	
1074-5136-02	37	09	1		1144-0169-01	19	11	2		1144-2511-01	08	08	1		1144-4304-02	30	13	1	

PART NO.	FIG.	INDEX	QTY		PART NO.	FIG.	INDEX	QTY		PART NO.	FIG.	INDEX	QTY		PART NO.	FIG.	INDEX	QTY	
1144-4311-01	30	15	1		1144-5002-02	21	03	2		1144-5811-01	41	05	2		1154-0360-01	11	15	1	
1144-4312-02	30	12	1		1144-5006-01	19	14	2		1144-5827-02	39	28	1		1154-0754-01	01	34	1	
1144-4321-01	36	02	1		1144-5006-01	21	15	2		1144-5836-01	39	27	1		1154-0755-01	01	34	1	
1144-4327-02	35	02	1		1144-5008-01	19	15	2		1144-5842-01	39	04	1		1154-0756-01	01	34	1	
1144-4327-02	36	01	1		1144-5008-01	21	14	2		1144-5861-01	40	02	5		1154-0757-01	10	03	1	
1144-4328-01	32	13	2		1144-5010-01	19	02	2		1144-5863-01	40	06	5		1154-0765-01	35	18	1	
1144-4328-01	36	04	2		1144-5012-01	18	03	4		1144-5901-03	40	04	1		1154-1008-01	01	12	2	
1144-4332-02	36	11	2		1144-5012-01	20	04	4		1144-5906-01	40	07	5		1154-1107-01	02	10	2	
1144-4333-01	36	12	2		1144-5019-01	18	04	4		1144-5927-02	42	06	1		1154-1664-01	01	36	1	
1144-4335-01	30	16	1		1144-5019-01	20	03	4		1144-5932-01	42	03	1		1154-1665-01	01	36	1	
1144-4437-02	22	06	1		1144-5020-02	18	07	2		1144-6072-04	34	10	1		1154-1666-01	01	36	1	
1144-4545-03	30	24	1		1144-5020-02	20	12	2		1144-6074-01	31	01	1		1154-2033-01	08	29	1	
1144-4546-01	30	25	1		1144-5040-01	19	08	2		1144-6084-01	06	01	1		1154-2039-01	23	22	1	
1144-4547-01	30	22	1		1144-5040-01	21	08	2		1144-6220-01	36	09	1		1154-2076-01	08	04	1	
1144-4549-01	30	21	1		1144-5066-01	18	05	2		1144-6272-01	30	31	2		1154-2083-01	08	31	1	
1144-4553-03	35	01	1		1144-5066-01	20	05	2		1144-6290-01	44	12	1		1154-2084-01	08	30	2	
1144-4554-01	35	04	2		1144-5068-01	18	08	2		1144-6291-01	44	12	1		1154-2090-01	07	13	1	
1144-4562-05	30	05	1		1144-5068-01	20	11	2		1144-6401-02	04	09	1		1154-2092-01	07	11	1	
1144-4564-01	30	18	2		1144-5095-02	18	06	2		1144-6525-01	07	18	2		1154-2240-01	44	06	8	
1144-4565-01	30	03	2		1144-5095-02	20	06	2		1144-6525-01	42	13	2		1154-2420-01	06	02	1	
1144-4566-01	30	27	1		1144-5103-01	34	19	1		1144-6703-01	44	11	1		1154-2429-01	02	13	1	
1144-4567-02	30	44	1		1144-5118-02	16	01	1		1144-6831-01	10	19	1		1154-2509-01	08	25	1	
1144-4622-01	31	26	1		1144-5139-01	19	10	2		1144-6884-03	05	13	1		1154-2597-01	08	11	1	
1144-4623-04	31	19	1		1144-5139-01	21	17	2		1144-6886-03	04	10	1		1154-2598-01	08	12	1	
1144-4625-03	31	20	1		1144-5143-02	19	12	2		1144-7283-03	23	23	1		1154-3063-01	28	24	1	
1144-4626-01	31	23	1		1144-5143-02	21	10	2		1144-7285-03	23	14	1		1154-3063-01	29	28	1	
1144-4632-01	31	25	1		1144-5200-01	16	06	3		1144-7302-02	12	06	1		1154-3153-02	24	08	1	
1144-4633-03	31	21	1		1144-5313-02	13	04	4		1144-7303-02	12	05	1		1154-3322-01	25	10	2	
1144-4635-01	31	24	1		1144-5313-02	14	06	4		1144-7304-03	12	02	1		1154-3389-01	25	16	1	
1144-4638-01	31	22	2		1144-5318-01	13	03	4		1144-7305-02	12	01	1		1154-3390-01	25	17	1	
1144-4681-01	31	27	1		1144-5318-01	14	07	4		1144-7310-01	39	02	1		1154-3520-01	35	10	2	
1144-4682-02	31	28	1		1144-5420-03	12	03	4		1144-7311-01	01	32	1		1154-4507-01	31	04	1	
1144-4684-03	31	09	1		1144-5422-01	12	04	4		1144-7325-02	30	42	1		1154-4511-02	31	06	1	
1144-4685-01	31	08	1		1144-5451-01	14	10	6		1144-7326-01	17	03	1		1154-4514-02	31	05	2	
1144-4701-02	32	16	1		1144-5452-01	14	09	6		1144-7327-01	26	31	1		1154-4515-02	31	12	2	
1144-4702-03	32	15	1		1144-5457-02	14	04	4		1144-7328-01	26	24	1		1154-4516-02	31	29	2	
1144-4704-01	32	03	1		1144-5513-02	23	01	1		1144-7330-02	30	36	1		1154-4714-02	32	25	1	
1144-4705-01	32	07	2		1144-5524-01	23	03	1		1144-7331-02	30	38	1		1154-4718-02	32	01	1	
1144-4706-02	32	05	2		1144-5539-02	23	05	2		1144-7334-01	30	32	1		1154-4719-02	32	02	1	
1144-4708-02	32	26	1		1144-5540-01	23	09	1		1144-7335-01	24	04	1		1154-4737-01	31	13	2	
1144-4711-13	32	21	1		1144-5541-04	23	07	2		1144-7336-01	42	07	1		1154-4791-01	30	35	1	
1144-4720-01	32	06	2		1144-5544-13	23	10	2		1144-7346-01	33	06	1		1154-4895-01	34	12	1	
1144-4730-01	34	03	2		1144-5552-12	23	19	1		1144-7347-01	33	06	1		1154-4912-01	30	33	1	
1144-4749-02	32	18	1		1144-5553-01	23	15	1		1144-7358-01	24	25	1		1154-4917-01	11	13	2	
1144-4753-02	32	27	1		1144-5554-01	37	01	1		1144-7359-01	24	25	1		1154-4918-01	11	14	2	
1144-4785-04	30	40	1		1144-5556-03	23	04	1		1144-7361-01	42	14	1		1154-4951-01	11	04	2	
1144-4787-01	30	39	1		1144-5713-12	39	26	1		1144-7362-01	42	14	1		1154-4952-02	11	03	2	
1144-4864-01	34	05	2		1144-5716-13	39	10	1		1144-7366-01	10	22	1		1154-4954-01	11	02	1	
1144-4865-02	34	16	1		1144-5735-01	39	11	2		1144-7366-01	30	47	1		1154-4955-02	11	06	1	
1144-4867-02	34	08	1		1144-5748-02	38	02	1		1144-7381-01	30	46	1		1154-4963-01	11	10	1	
1144-4869-01	34	06	1		1144-5748-02	39	20	1		1144-7801-01	48	44	1		1154-4966-01	11	16	1	
1144-4883-02	34	14	2		1144-5749-01	38	03	2		1144-7802-01	48	45	4		1154-4966-01	11	17	1	
1144-4885-01	34	15	1		1144-5749-01	39	18	1		1144-7803-01	48	42	1		1154-4967-01	11	07	2	
1144-4886-05	34	26	1		1144-5750-02	38	13	1		1144-7902-02	48	39	1		1154-4969-01	11	12	1	
1144-4887-02	34	09	2		1144-5750-02	39	24	1		1144-7903-02	48	40	1		1154-4971-01	11	09	2	
1144-4888-01	34	04	2		1144-5752-02	38	06	2		1144-7904-02	48	41	1		1154-5003-02	18	02	2	
1144-4891-02	34	30	1		1144-5752-02	39	19	2		1144-7907-01	48	35	1		1154-5060-01	19	06	2	
1144-4907-02	34	23	1		1144-5753-02	33	05	2		1144-7908-01	48	46	4		1154-5060-01	21	06	2	
1144-4909-03	34	24	1		1144-5771-02	38	11	2		1144-7909-01	48	47	1		1154-5434-01	12	08	1	
1144-4913-02	33	04	1		1144-5791-02	41	12	1		1144-7910-01	48	36	1		1154-5728-01	41	01	1	
1144-4914-02	34	22	1		1144-5794-02	41	10	1		1151-7371-01	46	14	1		1154-5780-01	39	13	2	
1144-4915-04	34	20	1		1144-5797-01	41	04	1		1151-7372-01	46	14	1		1154-5781-01	39	14	2	
1144-4931-02	32	14	1		1144-5798-12	41	07	2		1154-0115-02	15	06	1		1154-5826-02	39	06	1	
1144-4933-01	32	09	2		1144-5799-13	41	09	1		1154-0116-02	23	13	1		1154-5835-01	39	01	1	
1144-4935-01	32	20	1		1144-5801-01	39	07	2		1154-0124-02	43	05	1		1154-5840-02	39	03	1	
1144-4936-02	32	19	1		1144-5802-01	41	08	2		1154-0158-01	01	35	1		1154-5843-01	39	05	1	
1144-4944-02	32	22	1		1144-5806-02	41	11	2		1154-0159-01	01	35	1		1154-5852-01	39	21	1	
1144-4945-02	32	11	2		1144-5809-02	38	04	1		1154-0160-01	01	35	1		1154-5865-01	40	05	5	
1144-5001-01	19	01	2		1144-5809-02	41	13	1		1154-0328-07	10	01	1		1154-6061-01	47	07	1	
1144-5001-01	21	01	2		1144-5810-01	41	06	1		1154-0359-01	33	02	1		1154-6111-01	09	15	1	

PART NO.	FIG.	INDEX	QTY		PART NO.	FIG.	INDEX	QTY		PART NO.	FIG.	INDEX	QTY		PART NO.	FIG.	INDEX	QTY	
1154-6113-01	08	14	1		1179-2080-01	03	17	2		1179-7301-01	06	14	1		1273-3052-01	46	03	2	
1154-6114-01	08	06	1		1179-2087-01	07	16	1		1179-7302-01	10	20	1		1273-3055-01	46	04	4	
1154-6312-02	38	12	1		1179-2091-01	07	05	1		1179-7302-01	12	09	1		1273-3055-01	47	10	2	
1154-6312-02	41	14	1		1179-2093-01	07	15	1		1179-7302-01	30	41	1		1273-3058-01	46	10	2	
1154-6511-01	38	15	1		1179-2094-01	07	12	1		1179-7303-02	02	15	1		1273-3058-01	47	12	1	
1154-6512-01	39	29	1		1179-2415-01	06	13	1		1179-7303-02	07	04	1		1273-3102-01	45	04	3	
1154-6515-01	38	15	1		1179-2427-01	02	17	2		1179-7303-02	42	01	1		1273-3505-01	32	10	2	
1154-6516-01	39	29	1		1179-2428-01	02	11	1		1179-7304-01	07	03	1		1273-3535-01	24	03	1	
1154-6517-01	38	15	1		1179-2463-01	06	16	1		1179-7305-01	07	02	1		1273-3535-01	25	18	2	
1154-6518-01	39	29	1		1179-2465-01	06	15	1		1179-7317-01	12	10	1		1274-2513-01	27	16	1	
1154-6810-01	48	43	1		1179-2470-01	02	33	2		1179-7360-01	24	07	1		1274-2513-01	28	15	1	
1154-7312-01	30	45	1		1179-2471-01	02	12	2		1179-7373-01	01	20	1		1274-2513-01	29	25	1	
1154-7319-01	01	10	1		1179-2472-01	02	04	1		1179-7901-01	48	38	1		1274-2604-02	27	09	1	
1155-0117-01	01	23	1		1179-2473-01	02	05	1		1200-1336-02	32	24	4		1274-2604-02	28	09	1	
1156-7501-01	48	48	1		1179-2474-01	02	34	1		1200-1342-03	36	14	2		1274-2604-02	29	22	1	
1174-1015-01	02	21	5		1179-3013-01	46	12	2		1200-1462-01	09	21	1		1274-2611-01	27	03	2	
1179-0103-04	06	17	1		1179-3013-01	47	15	1		1200-1462-03	35	07	4		1274-2611-01	28	03	2	
1179-0111-03	06	09	1		1179-3016-02	46	13	2		1200-1531-01	39	16	2		1274-2611-01	29	03	2	
1179-0112-03	44	03	1		1179-3016-02	47	16	1		1200-1541-09	09	03	1		1274-2614-01	27	15	1	
1179-0113-03	06	04	1		1179-3132-01	24	20	1		1200-1566-04	09	23	1		1274-2614-01	28	18	1	
1179-0114-02	43	03	1		1179-3183-01	25	07	1		1200-1646-03	09	26	1		1274-2614-01	29	26	1	
1179-0115-02	06	05	1		1179-4306-01	30	17	2		1200-2105-05	11	05	2		1274-2615-01	27	17	1	
1179-0117-02	43	02	1		1179-4354-01	22	04	1		1200-2105-05	24	15	1		1274-2615-01	28	17	1	
1179-0120-02	06	08	1		1179-4355-01	22	03	1		1200-2105-05	25	12	1		1274-2615-01	29	24	1	
1179-0128-01	18	10	1		1179-4358-01	22	05	1		1200-2105-06	35	16	1		1274-2617-01	27	08	1	
1179-0128-01	20	09	2		1179-4373-01	22	02	1		1200-2466-12	30	10	1		1274-2617-01	28	08	1	
1179-0147-02	01	33	1		1179-4374-01	22	09	1		1200-3121-07	26	17	1		1274-2617-01	29	21	1	
1179-0148-02	01	33	1		1179-4375-01	22	08	1		1200-3131-03	17	02	2		1274-3103-02	46	01	4	
1179-0162-03	37	06	1		1179-4376-01	22	07	1		1200-3131-03	32	08	2		1274-3508-01	27	20	1	
1179-0170-01	18	09	1		1179-4446-01	15	03	1		1200-3134-16	08	19	1		1274-3508-01	28	25	1	
1179-0170-01	20	10	2		1179-4455-01	15	01	1		1200-3134-16	26	11	3		1274-3508-01	29	27	1	
1179-0256-01	31	15	1		1179-4457-01	15	02	1		1200-3134-16	27	26	1		1274-3605-01	27	12	2	
1179-0309-02	03	01	1		1179-4582-01	31	14	1		1200-3134-16	28	19	1		1274-3605-01	28	10	2	
1179-0311-03	15	07	1		1179-4733-01	31	07	1		1200-3134-16	29	06	1		1274-3605-01	29	18	2	
1179-0316-02	18	13	1		1179-4744-02	34	02	1		1200-3134-16	30	04	2		1274-7305-01	02	35	1	
1179-0317-02	20	14	1		1179-4746-01	34	11	1		1200-3134-16	31	11	2		1274-7305-01	24	26	1	
1179-0318-02	20	13	1		1179-4747-01	34	01	1		1200-3134-16	42	10	1		1300-3122-34	36	05	1	
1179-0319-02	18	14	1		1179-4870-01	34	32	1		1200-3220-01	22	10	1		1300-3122-44	42	04	1	
1179-0321-02	38	16	1		1179-4885-01	34	13	1		1200-3221-07	11	08	2		1300-3132-11	26	14	1	
1179-0322-02	38	16	1		1179-4886-01	34	29	1		1200-3221-07	25	28	1		1300-3132-12	42	05	1	
1179-0323-02	38	16	1		1179-4907-01	34	28	1		1200-3221-07	32	04	2		1300-3132-15	26	21	1	
1179-0327-01	23	25	1		1179-4914-01	34	27	2		1200-3221-07	36	07	4		1300-3142-04	14	08	3	
1179-0330-01	23	24	1		1179-4917-01	34	31	1		1200-3225-07	27	11	2		1300-3222-37	14	03	1	
1179-0346-01	12	12	1		1179-5040-01	19	07	2		1200-3225-07	28	11	2		1300-3222-60	09	01	1	
1179-0355-02	22	13	1		1179-5040-01	21	07	2		1200-3225-07	29	19	2		1300-3302-05	24	19	1	
1179-0357-02	34	33	1		1179-5085-01	18	12	2		1200-3231-05	30	07	2		1300-3302-05	47	06	1	
1179-0368-01	36	15	1		1179-5085-01	20	08	2		1200-3231-07	35	08	2		1300-3312-13	36	13	1	
1179-0531-04	07	01	1		1179-5123-01	16	03	1		1200-3234-17	09	07	1		1300-3342-35	08	22	1	
1179-0751-01	10	08	1		1179-5132-01	16	04	1		1200-5212-04	35	14	1		1300-3352-14	36	10	1	
1179-0752-02	48	49	1		1179-5206-01	16	07	4		1200-5241-12	40	01	10		1300-3352-17	27	19	1	
1179-0753-01	42	08	1		1179-5207-01	16	02	3		1273-2014-01	45	02	6		1300-4310-03	35	11	1	
1179-0902-01	22	12	1		1179-5450-01	12	11	4		1273-2016-01	45	01	6		1300-4322-05	35	03	2	
1179-1011-01	01	19	1		1179-5571-01	23	17	1		1273-2017-01	45	03	6		1300-4342-07	26	16	1	
1179-1046-01	02	06	1		1179-5718-01	48	32	10		1273-2036-01	45	07	3		1300-4342-07	27	07	1	
1179-1047-01	02	14	1		1179-5746-01	38	01	1		1273-2508-01	28	13	1		1300-4342-07	28	07	1	
1179-1055-01	02	02	1		1179-5747-01	39	23	1		1273-2515-01	27	14	1		1300-4342-07	29	20	1	
1179-1501-01	05	14	2		1179-5775-01	39	09	2		1273-2515-01	28	14	1		1300-4342-07	30	11	1	
1179-1502-01	05	15	2		1179-5779-01	39	15	2		1273-2515-01	29	16	1		1400-1122-05	30	34	1	
1179-1506-01	04	01	2		1179-5793-01	41	02	2		1273-2539-01	29	15	1		1400-1122-05	33	03	1	
1179-1516-01	03	10	1		1179-5803-01	41	03	1		1273-3002-01	46	06	4		1400-1122-05	34	18	3	
1179-1580-01	03	20	2		1179-5921-01	42	09	1		1273-3002-01	47	09	2		1400-1122-08	37	02	1	
1179-1604-01	05	07	1		1179-6061-01	07	08	1		1273-3003-01	46	05	4		1400-1154-03	10	11	1	
1179-1605-01	03	25	1		1179-6073-01	30	28	1		1273-3003-01	47	08	2		1400-1163-08	08	28	1	
1179-1607-01	03	24	1		1179-6113-02	03	12	1		1273-3010-02	46	09	2		1400-1165-09	09	02	1	
1179-1622-01	03	11	1		1179-6211-01	44	02	1		1273-3010-02	47	11	1		1400-1187-02	30	09	1	
1179-1658-01	03	13	1		1179-6212-01	30	30	1		1273-3029-01	27	25	1		1400-1226-03	19	04	4	
1179-1682-01	06	10	5		1179-6213-01	31	02	1		1273-3029-01	28	04	1		1400-1226-03	21	04	4	
1179-2009-01	07	17	3		1179-6214-01	15	04	1		1273-3029-01	29	04	1		1400-2131-18	40	03	5	
1179-2034-01	08	03	1		1179-6216-02	43	09	1		1273-3039-01	46	11	2		1400-2153-10	44	08	1	
1179-2065-01	37	03	1		1179-6217-02	43	09	1		1273-3039-01	47	13	1		1400-2163-08	30	02	1	

PART NO.	FIG.	INDEX	QTY		PART NO.	FIG.	INDEX	QTY		PART NO.	FIG.	INDEX	QTY		PART NO.	FIG.	INDEX	QTY	
1400-2341-06	09	24	1		9334-2610-11	05	16	1		9384-2010-31	48	22	12						
1400-2522-06	38	10	2		9334-2810-11	12	07	4		9384-2010-41	48	23	5						
1500-2610-03	08	02	5		9335-1000-11	25	13	1		9384-2310-41	06	03	1						
1500-2610-03	38	05	2		9335-1000-11	35	15	1		9384-2610-11	48	19	1						
1500-2610-03	39	17	1		9335-1210-11	44	09	1		9384-2800-36	48	20	11						
1500-2610-15	08	10	1		9335-1310-11	05	05	1											
1500-2640-04	01	15	2		9335-1310-11	05	06	1											
1500-2660-12	39	22	3		9335-1310-41	05	20	1											
4002-7305-01	01	31	1		9335-1820-32	32	17	1											
4002-7903-01	48	37	1		9335-1910-71	05	19	1											
4163-4116-01	22	01	1		9335-1910-81	05	17	1											
4417-3412-02	26	28	4		9335-1910-81	05	18	2											
4425-3245-03	24	22	1		9341-2210-11	43	11	1											
4426-2201-01	25	06	1		9341-2210-21	43	11	1											
4426-2454-12	29	11	1		9341-2310-11	44	07	1											
4427-3207-01	26	27	4		9343-4210-21	43	14	2											
4428-1502-01	33	01	1		9343-4310-21	43	14	2											
4641-0901-01	10	21	2		9346-3320-22	43	13	1											
4642-0901-01	05	09	1		9346-3320-32	43	13	1											
4642-0901-01	26	01	2		9346-3720-21	23	26	1											
4642-0901-01	27	01	4		9346-3720-21	43	15	4											
4642-0901-01	28	01	4		9351-1010-41	10	15	1											
4642-0901-01	29	01	4		9351-2000-11	04	08	1											
4642-0901-01	31	16	2		9352-6410-11	07	18	2											
4642-0901-01	44	01	1		9352-6410-11	42	13	2											
9312-1110-81	45	06	3		9352-6510-21	07	18	2											
9312-1310-71	13	02	3		9352-6510-21	42	13	2											
9312-1310-71	14	05	1		9367-4510-31	06	11	1											
9312-1510-53	14	01	2		9372-2510-62	38	08	1											
9312-1821-81	10	06	1		9372-2510-72	41	15	1											
9313-1000-11	06	12	1		9381-4810-31	43	12	1											
9313-1000-11	43	08	1		9381-4911-01	43	12	1											
9313-1000-21	06	07	1		9383-2210-11	09	17	1											
9313-1510-41	05	03	2		9383-2210-11	18	11	2											
9313-1510-51	37	05	2		9383-2210-11	20	07	2											
9313-1710-81	05	12	1		9383-2510-21	43	04	1											
9313-1910-21	10	10	1		9384-1110-41	48	14	4											
9314-2810-31	16	05	1		9384-1110-61	48	06	16											
9321-2110-11	11	01	1		9384-1211-01	48	05	14											
9321-2110-11	31	18	2		9384-1310-11	48	04	13											
9321-2110-11	32	28	1		9384-1310-51	48	16	9											
9321-2110-11	34	07	2		9384-1310-81	48	12	46											
9321-2110-42	32	23	1		9384-1310-91	48	01	81											
9321-2120-31	30	01	1		9384-1311-01	48	02	79											
9321-2120-31	36	08	1		9384-1311-11	48	24	6											
9321-2310-41	25	20	1		9384-1311-21	48	03	51											
9321-2620-41	31	17	1		9384-1621-21	08	18	1											
9321-2710-52	09	08	1		9384-1621-21	09	19	1											
9322-1000-11	19	09	2		9384-1711-21	48	31	3											
9322-1000-11	21	09	2		9384-1720-41	48	34	4											
9322-1310-31	25	08	1		9384-1820-31	48	15	10											
9322-1310-31	26	12	1		9384-1820-61	48	17	2											
9322-1310-31	27	18	1		9384-1900-52	48	18	7											
9322-1310-31	28	16	1		9384-1900-53	48	07	4											
9322-1310-31	29	23	1		9384-1900-54	48	08	4											
9322-1310-51	35	09	1		9384-1900-55	07	09	1											
9322-1510-52	09	20	1		9384-1900-56	15	05	10											
9323-1410-11	01	17	1		9384-1900-56	23	12	4											
9324-6410-11	43	10	1		9384-1900-56	31	03	4											
9326-1000-91	01	30	1		9384-1900-56	43	06	4											
9326-1000-91	06	06	1		9384-1900-57	07	10	3											
9326-1000-91	43	01	1		9384-1900-57	30	29	10											
9326-1410-31	06	18	1		9384-1900-57	44	10	4											
9326-2820-11	01	08	1		9384-1900-61	45	05	3											
9326-2900-06	13	01	4		9384-1900-64	48	13	1											
9331-2310-11	44	04	1		9384-1920-61	48	27	1											
9331-2710-11	07	07	2		9384-1921-01	48	09	7											
9332-5310-21	43	07	1		9384-1921-11	48	11	3											
9332-5510-31	42	12	1		9384-1921-21	48	10	18											
9334-2310-11	42	02	1		9384-2010-21	48	21	44											



Copyright
2000 MINOLTA Co., Ltd.
Printed in Japan

1179-7995-21 00102400