AD-14

SERVICE MANUAL

10794

CONTENTS

GENERAL, MECHANICAL/ELECTRICAL

1. SPECIFICATIONS M-1
2. PARTS IDENTIFICATION M-1
3. CROSS-SECTIONAL VIEW M-2
4. DRIVE SYSTEM M-3
5. ELECTRICAL COMPONENTS LAYOUT M-3
6. MECHANICAL OPERATIONS M-4
   - 6-1. Switchback Mechanism M-4
     - (1) Switchback Operation M-4
     - (2) Paper Exit Roller Drive Coupling Mechanism M-4
     - (3) Switchback Motor Control M-4
   - 6-2. Transport and Duplex Paper Take-Up Mechanism M-5
     - (1) Transport and Duplex Paper Take-Up Operation M-5
     - (2) Duplex Unit Transport Motor Control M-5
   - 6-3. 2-Sided Copying Method M-6
     - (1) Operations in 2-sided copying with a single sheet of paper resident in the system M-6
     - (2) Operations in 2-sided copying with two sheets of paper resident in the system M-8

DIS/REASSEMBLY, ADJUSTMENT

1. DISASSEMBLY D-1
   - 1-1. Maintenance Schedule D-1
   - 1-2. Removal of the Duplex Unit D-1
   - 1-3. Cleaning of Duplex Unit Transport Roller 1 and 2 and Duplex Unit Transport Roll 1 and 2 ..... D-1
2. ADJUSTMENT D-2
   - 2-1. Changing the Cable Tension Strength (Replacement of the Spring) D-2
   - 2-2. Reference Position Adjustment D-3

MISFEED DETECTION

1. MISFEED DETECTION T-1
   - 1-1. Location of Misfeed Detecting Sensors T-1
   - 1-2. Misfeed Detection Timing T-1

GENERAL, MECHANICAL/ELECTRICAL

1. SPECIFICATIONS

Type	:	Switchback and Circulating Duplex Unit
Installation	:	Mounted on the right side door of copier
Type of Copy Paper	:	Plain paper
Paper Sizes	:	A5L to A3Wide or 5-1/2 × 8-1/2L to 11 × 17L
Paper Weight	:	64 to 90 g/m^2 or 17 to 24 lbs.
Registration	:	Center
Power Requirements	:	DC24 V ± 10 %, DC5.1 V ± 5% (supplied from copier)
Max. Power Consumption	:	17 W
Dimensions	:	Width ... 139 mm or 5-1/2 in Depth ... 440 mm or 17-1/4 in Height ... 365 mm or 14-1/4 in
Weight	:	3.1 kg or 6-3/4 lbs.
Environmental Requirements	:	Same as copier

2. PARTS IDENTIFICATION

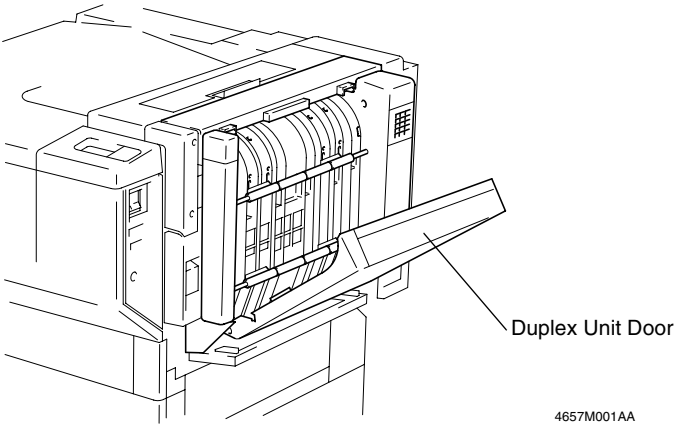

3. CROSS-SECTIONAL VIEW

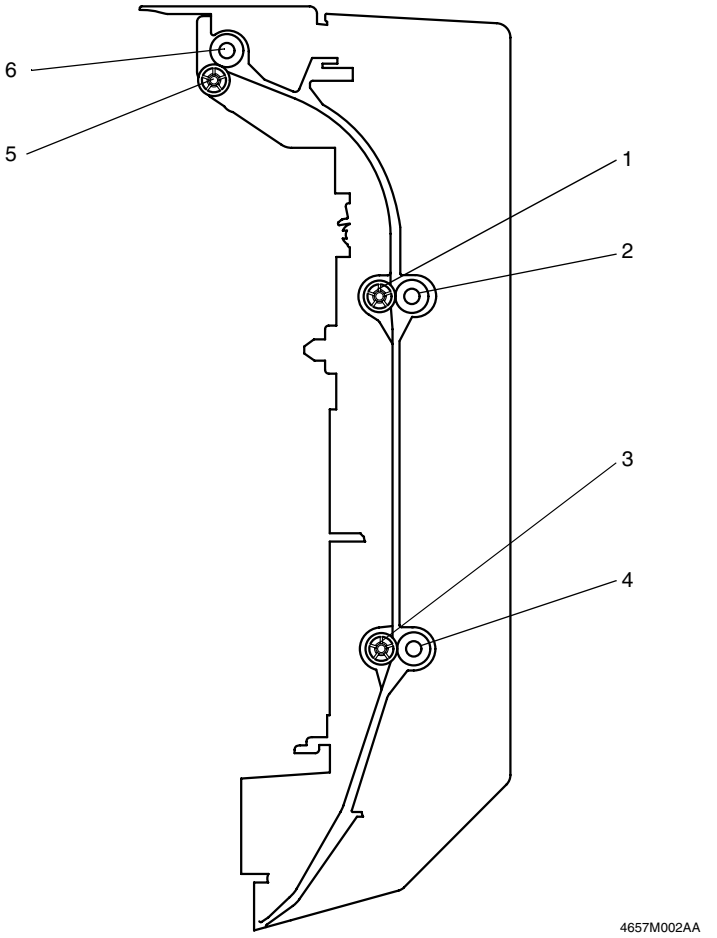

1. Duplex Unit Transport Roll 2
2. Duplex Unit Transport Roller 2
3. Duplex Unit Transport Roll 3
4. Duplex Unit Transport Roller 3
5. Duplex Unit Transport Roll 1
6. Duplex Unit Transport Roller 1

4. DRIVE SYSTEM

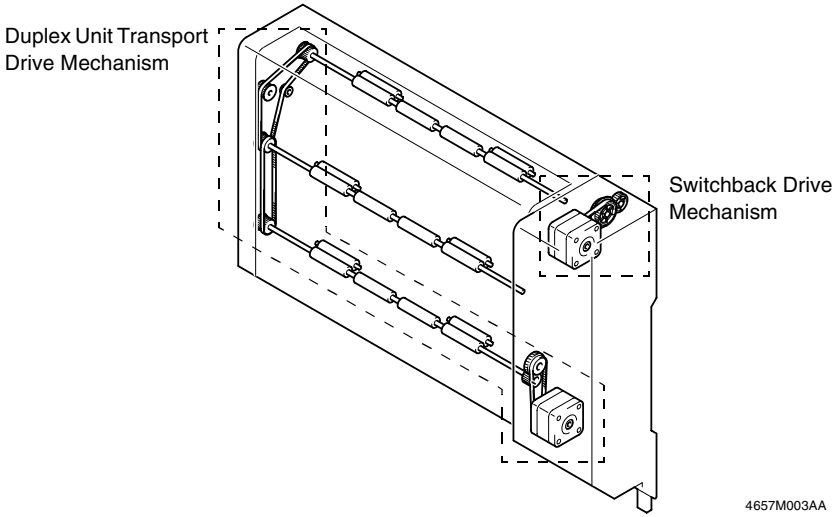

5. ELECTRICAL COMPONENTS LAYOUT

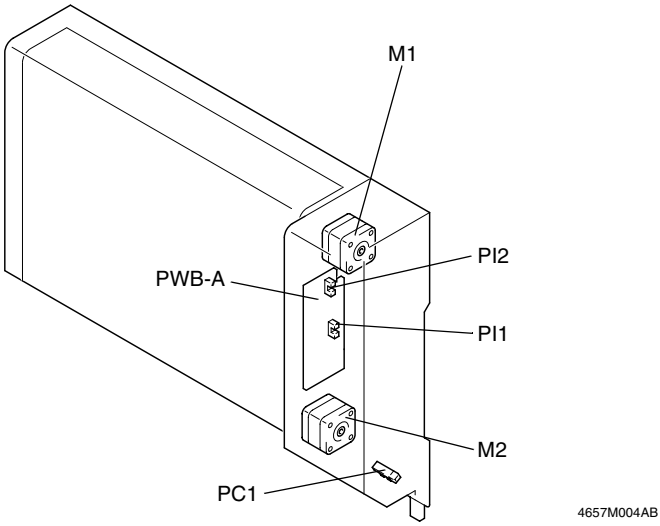

Symbol	Name	Symbol	Name
PWB-A	Duplex Control Board	PC1	Duplex Unit Transport Sensor 2
M1	Switchback Motor	PI1	Duplex Unit Transport Sensor 1
M2	Duplex Unit Transport Motor		(in PWB-A)
		PI2	Duplex Unit Door Set Sensor (in PWB-A)

6. MECHANICAL OPERATIONS

6-1. Switchback Mechanism

(1) Switchback Operation

The Paper Exit Roller of the copier is used to subject the 1-sided copy to a switchback sequence so that the 1-sided copy is to be transported through the Duplex Unit.

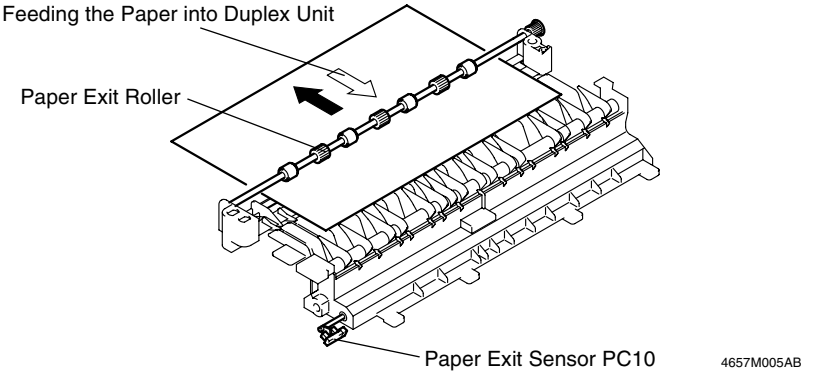

(2) Paper Exit Roller Drive Coupling Mechanism

When the Duplex Unit is mounted, the tip of the Duplex Unit Lever raises the Idle Lever to cut off the drive from the copier (Fusing Rollers) and the Paper Exit Roller is driven by the Switchback Motor.

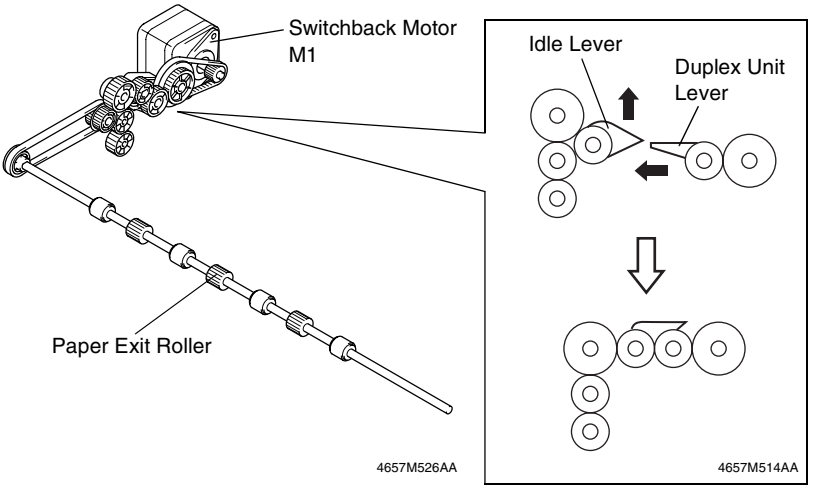

(3) Switchback Motor Control

Rotation of the Switchback Motor is controlled by the signals output from pins 1 to 4 of PJ2A on the Duplex Control Board.

6-2. Transport and Duplex Paper Take-Up Mechanism

(1) Transport and Duplex Paper Take-Up Operation

Drive for the Duplex Unit is provided by the Duplex Unit Transport Motor.

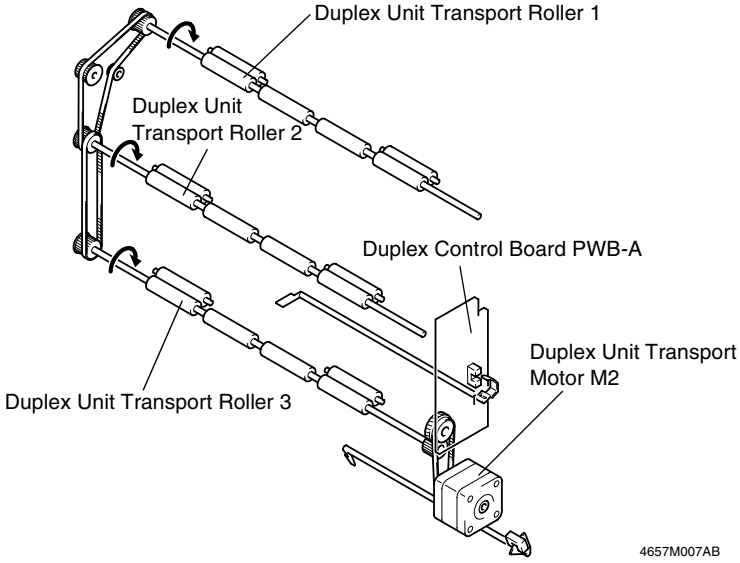

(2) Duplex Unit Transport Motor Control

Rotation of the Duplex Unit Transport Motor is controlled by the signals output from pins 1 to 4 of PJ3A on the Duplex Control Board.

6-3. 2-Sided Copying Method

- The following two types of 2-sided copying methods are available.

2-Sided Copying Methods
- 2-sided copying with a single sheet of paper resident in the system
- 2-sided copying with two sheets of paper resident in the system (FD length 215.9 mm or less)

(1) Operations in 2-sided copying with a single sheet of paper resident in the system

Operation 1
- The first sheet of paper is taken up and fed in from the copier drawer and the copier starts the first copy cycle to produce the copy image of the second page of the original.

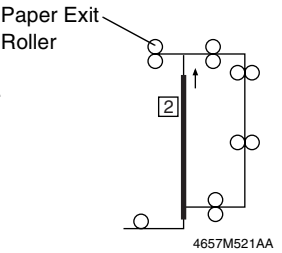

4657M521AA

Operation 2
- Immediately before the 1-sided copy leaves the Paper Exit Roller, the direction of rotation of the Paper Exit Roller is reversed and the 1-sided copy is transported toward and into the Duplex Unit.

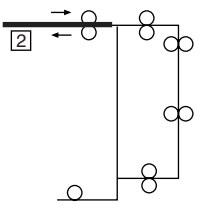

4657M522AA

Operation 3
- The 1-sided copy moves through the Duplex Unit and is directly subject to the second copy cycle without being stopped.

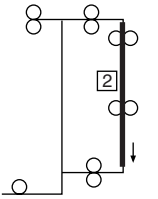

4657M523AA

Operation 4

- The copier carries out the second copy cycle to produce the copy image of the first page of the original on the other side of the 1-sided copy.

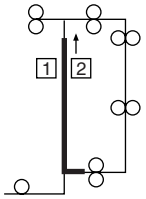

4657M524AA

Operation 5

- While feeding the first 2-sided copy out of itself, the copier carries out the first copy cycle for the second sheet of paper to produce the copy image of the fourth page of the original.

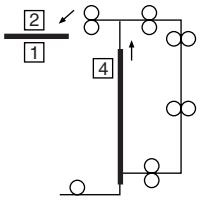

4657M525AA

✻ Steps 2 through 5 are repeated.

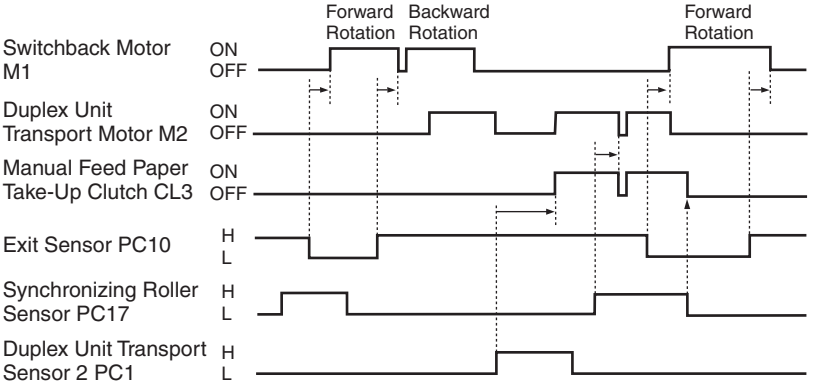

4657M513CA

(2) Operations in 2-sided copying with two sheets of paper resident in the system

Operation 1
- The first sheet of paper is taken up and fed in from the copier drawer and the copier starts the first copy cycle to produce the copy image of the second page of the original.

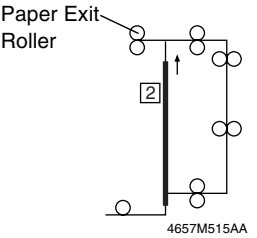

4657M515AA

Operation 2
- Immediately before the first 1-sided copy leaves the Paper Exit Roller, the direction of rotation of the Paper Exit Roller is reversed and the first 1-sided copy is transported toward and into the Duplex Unit.
- At the same time, the second sheet of paper is taken up and fed into the copier.

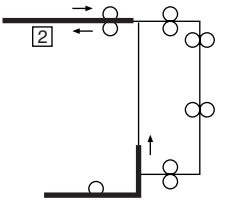

4657M516AA

Operation 3
- The copier carries out the first copy cycle for the second sheet of paper to produce the copy image of the fourth page of the original.
- At the same time, the first 1-sided copy is transported through the Duplex Unit.

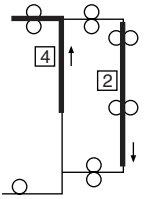

4657M517AA

Operation 4
- The copier produces the copy image of the first page of the original on the first 1-sided copy that has been fed through the Duplex Unit.
- At the same time, the second sheet of paper is subjected to a switchback sequence at the exit section and fed into the Duplex Unit. It is then fed through the Duplex Unit without being stopped and into the copier again.

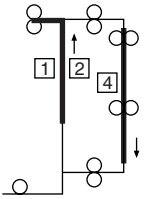

4657M518AA

Operation 5
- While feeding the first sheet of paper out, the copier carries out a copy cycle for the second sheet of paper to produce the copy image of the third page of the original.

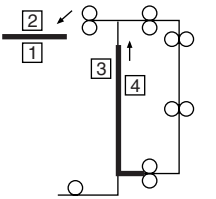

4657M519AA

Operation 6

- While feeding the second sheet of paper out, the copier takes up and feeds the third sheet of paper to produce the copy image of the sixth page of the original on the third sheet of paper.

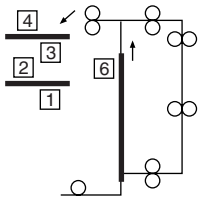

4657M520AA

✻ Steps 2 through 6 are repeated.

DIS/REASSEMBLY, ADJUSTMENT

1. DISASSEMBLY

1-1. Maintenance Schedule

- To ensure good copies and an extended service life of the Duplex Unit, it is recommended that the maintenance jobs described in this schedule be carried out.

PM Parts	Maintenance Schedule Cycle		Tools Used for Cleaning	Parts No.	QTY	Reference Page
	Clean	Replace				
Duplex Unit Transport Roller 1, 2	❍	–	Cloth, alcohol	–	2	☞ D-1
Duplex Unit Transport Roll 1, 2	❍	–		–	4	☞ D-1

✻ Cleaning (indicated by "❍" in the above schedule) should be performed when a paper transport failure occurs.
✻ The above information is subject to change without notice.

1-2. Removal of the Duplex Unit

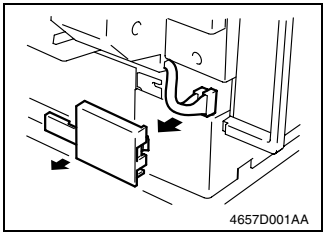

1. Remove the wiring cover and disconnect two connectors.

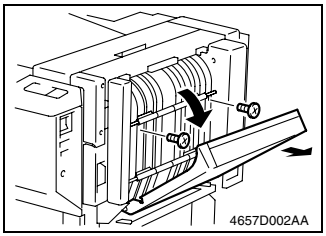

2. Open the Duplex Unit Door.
3. Remove two shoulder screws and the Duplex Unit.

1-3. Cleaning of Duplex Unit Transport Roller 1 and 2 and Duplex Unit Transport Roll 1 and 2

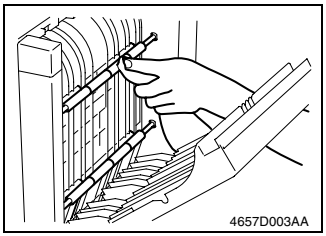

1. Open the Duplex Unit Door.
2. Wipe the surfaces of Duplex Unit Transport Roller 1 and 2 and Duplex Unit Transport Roll 1 and 2 clean with a soft cloth dampened with alcohol.

2. ADJUSTMENT

2-1. Changing the Cable Tension Strength (Replacement of the Spring)

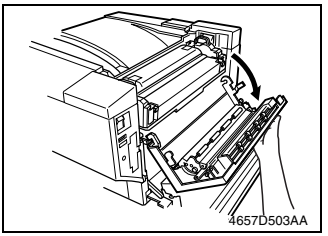

1. Open the Upper Right Door of the copier.

NOTE

- *Do not jerk the Upper Right Door open, as a malfunction could result. Be sure to hold onto the door with both hands and open it gently.*

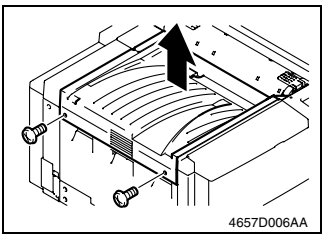

2. Remove two screws and the Exit Cover of the copier.

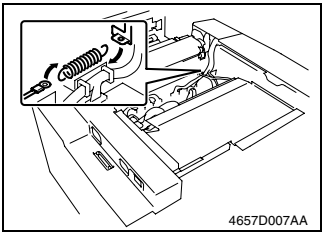

3. Remove the spring and, instead, install the spring furnished with the Duplex Unit in position.

NOTE

- *When the Duplex Unit is mounted, the Right Door of the copier can jerk open by its own weight as it is opened, damaging the copier. Be sure to replace the spring to change the tension strength of the cable.*

2-2. Reference Position Adjustment

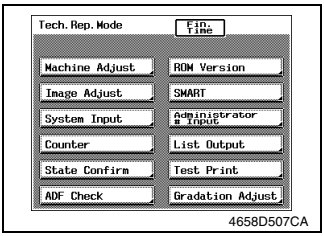

4658D507CA

1. Press the Utility key and touch “Meter Count.”
2. Press the following keys in this order to show the Tech. Rep. mode screen: Stop → 0 → 0 → Stop → 0 → 1.
3. Touch “Machine Adjust.”

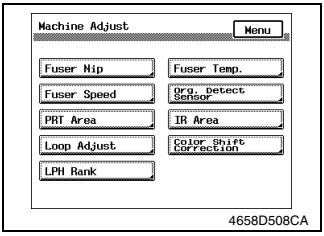

4658D508CA

4. Touch “PRT Area.”

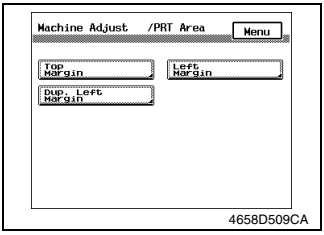

4658D509CA

5. Touch “Dup. Left Margin.”

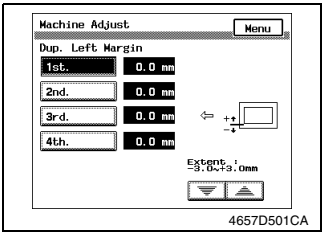

4657D501CA

6. Touch “1st.”

NOTE

- *Use the same procedures that follow for “2nd,” “3rd,” and “4th.”*

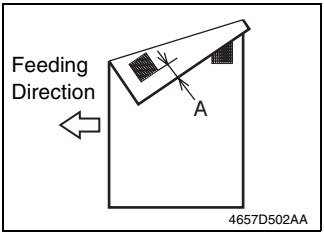

4657D502AA

7. Press the Start key to produce a test print.
8. Measure dimension A on the second side to see if it falls within the specifications.

✻ Specifications: 3.0 ± 1.0 mm

9. Using ▼ or ▲ key, input the difference between the measured value of dimension A and the specifications.
10. Produce another test print and make a check again.

MISFEED DETECTION

1. MISFEED DETECTION

1-1. Location of Misfeed Detecting Sensors

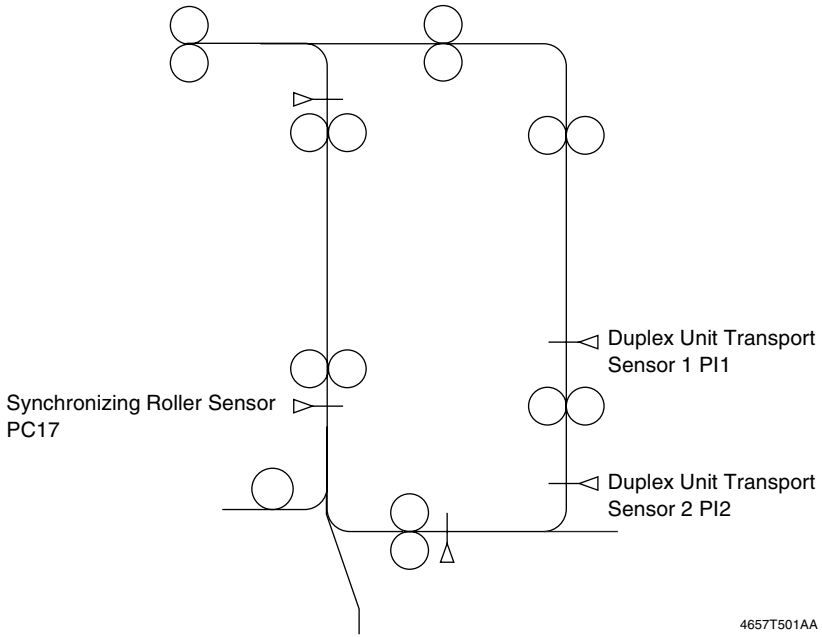

1-2. Misfeed Detection Timing

- The following lists the types of misfeed detection and detection timings for different misfeed locations.
- The symbol “L” (for the leading edge) and “T” (for the trailing edge) given in ( ) indicate the particular edge of the paper detected by the sensor.

Type	Detection Start	Detection
Paper left	Power Switch ON	Duplex Unit Transport Sensor 1 ON
Paper take-up failure	Manual Feed Paper Take-Up Clutch ON	Synchronizing Roller Sensor (L)
Misfeed during transport through unit	Duplex Unit Transport Sensor 1 (L)	Duplex Unit Transport Sensor 2 (L)