AFR-16

SERVICE MANUAL

11563

CONTENTS

GENERAL, MECHANICAL/ELECTRICAL

1. SPECIFICATIONS M-1
2. COMPONENT IDENTIFICATION M-3
3. CROSS-SECTIONAL VIEW M-4
4. DRIVE SYSTEM M-5
5. ELECTRICAL COMPONENT LAYOUT M-6
6. DESCRIPTION OF MODES M-7
   - 6-1. Mixed Original Mode M-7
   - 6-2. 1-Sided Mode M-7
   - 6-3. 2-Sided Mode M-7
   - 6-4. Single Feed Mode M-7
7. DOCUMENT TAKE-UP/FEEDING MECHANISM M-8
   - 7-1. Parts Identification M-8
   - 7-2. Document Pick-Up Mechanism M-9
   - 7-3. Document Take-Up Mechanism M-11
8. DOCUMENT TRANSPORT MECHANISM M-13
   - 8-1. Parts Identification M-13
   - 8-2. Document Transport Mechanism M-13
9. TURNOVER/EXIT MECHANISM M-15
   - 9-1. Parts Identification M-15
   - 9-2. Document Transport Mechanism M-15
   - 9-3. Turnover/Exit Switching Mechanism M-17
10. SCALE DRIVE MECHANISM M-18
    - 10-1.Parts Identification M-18
    - 10-2.Pressing of the Scale Drive Mechanism M-18
    - 10-3.Scale Drive Mechanism M-19
    - 10-4.Thin Paper Mode M-19
11. MISCELLANEOUS M-20
    - 11-1.Document Size Detection Mechanism M-20
      - (1) Document Width Detection M-20
      - (2) Document Length Detection M-20
      - (3) Document Size Detection M-21
    - 11-2.15° Open Detection Mechanism M-22
    - 11-3.Raised/Lowered Position Detection Mechanism M-22

TEST MODES

1. OUTLINE OF THE TEST MODES S-1
   - 1-1. Test Mode Setting Procedure S-1
   - 1-2. Types of Test Modes S-1
2. PAPER PASSAGE CHECK S-2
   - 2-1. Paper Passage Modes S-2
   - 2-2. Paper Passage Check Procedure S-2
   - 2-3. Indication by LEDs in Paper Passage Check S-3
     - (1) Indication by LEDs in closure failure S-3
     - (2) Indication by LEDs in Misfeed, Trouble and Warning S-3
3. UNIT CHECK S-4

3-1. Unit Check Modes S-4
3-2. Unit Check Procedure S-4
(1) Pick-Up Motor check S-4
(2) Take-Up Motor check S-5
(3) Main Motor check S-5
(4) Turnover/Exit Motor check S-5
(5) Scale Drive Motor check S-6
(6) Turnover Solenoid check S-6
4. SENSOR CHECK S-7
4-1. Sensor Check Mode S-7
4-2. Sensor Check Procedure S-8
(1) Sensor Check 1 check S-8
(2) Sensor Check 2 check S-8
5. BOARD CHECK S-9
5-1. Board Check Mode S-9
5-2. Board Check Procedure S-9

DIS/REASSEMBLY, ADJUSTMENT

1. MAINTENANCE SCHEDULE D-1
2. DISASSEMBLY D-2
2-1. Removal of the Transport Belt D-2
2-2. Removal of the Pick-Up Rolls, Take-Up Rolls, and Separator Pads D-3
3. ADJUSTMENTS D-5
3-1. Adjustment of Skew in the ADF D-5
3-2. Adjustment of the Document Feed Tray Reference Position D-6
3-3. Adjustment of the Single Feed Tray Reference Position D-7
3-4. Adjustment of the Document Stop Position in the 1-Sided and 1-Sided Mixed Original Mode D-8
3-5. Adjustment of the Document Stop Position in the 2-Sided Mode D-9
3-6. Adjustment of the Document Stop Position in the Single Feed Mode D-10
3-7. Adjustment of Turnover Solenoid D-11

TROUBLESHOOTING

1. MISFEED DETECTION T-1
2. MISFEED TROUBLESHOOTING PROCEDURES T-3
3. Closure Failure Detection T-7
4. Time chart T-8
4-1. 1-Side Original Mode T-8
4-2. Mixed Original Mode T-9
4-3. 2-Side Original Scanning Mode T-10
4-4. Single Feed Mode T-11

GENERAL, MECHANICAL/ELECTRICAL

1. SPECIFICATIONS

Name	:	Duplexing Document Feeder
Type	:	Paper Take-Up : Take-up from top of stack, U-turn feeding Transport : Single-belt transport Turnover : Loop turnover Ejection : Straight ejection
Installation	:	Mounted on the copier
Type of Document	:	Plain paper : 1-Sided mode - 50 g/m² to 110 g/m² 2-Sided mode - 60 g/m² to 90 g/m² Single Feed mode - 35 g/m² to 200 g/m²
Detectable Document Sizes	:	Metric Area (Standard) A5 C/L, B5 C/L, A4 C/L, B4 L, A3 L, 11 × 15 L, 8-1/2 × 11 L, 8 × 13 L Inch Area (Standard) A4 L, 5-1/2 × 8-1/2 C/L, 8-1/2 × 11 C/L, 8-1/2 × 14 L, 11 × 15 L, 11 × 17 L
Capacity	:	Document Feed Tray: 50 sheets -- 80 g/m² Document Exit Tray: 50 sheets -- 80 g/m²
Alignment	:	Rear Document Edge Guide
Document Loading	:	Face up
Modes	:	Mixed Original 1-Sided 2-Sided Single Feed
Power Source	:	DC 24 V -- supplied from the copier
Power Consumption	:	60 W or less
Dimensions	:	Width 603 mm Height 110 mm Depth 502 mm -- excluding Document Exit Tray
Weight	:	12.0 kg
Operating Environment	:	Same as copier

Originals Which Should Not be Used : The following types of originals, if used with the ADF, are very likely to cause trouble.

Type of Original	Possible Trouble
Sheets stapled or clipped together	Take-up failure, damaged sheet, defective drive mechanism due to jammed staples or clips.
Sheets glued together	Take-up failure, damaged sheet
Sheets folded, torn, or wrinkled	Take-up failure, damaged sheet
Sheets severely curled	Sheets mis-fed due to being dog-eared or fed in askew
Sheets weighing less than 40 g/m²	Damaged sheet

Originals for Which Feeding is not Guaranteed : The following types of originals, if used with the ADF, may or may not cause trouble.

Type of Original	Possible Trouble
Pieces of paper pasted up on a sheet	Folded or torn pasted-up pieces
Slightly curled sheets: curl 10 to 15 mm	Dog-eared pages, ejection failure
Heat-sensitive paper	Folded leading edge, ejection failure, transport failure
Coated sheets	Take-up failure, transport failure
Translucent paper	Take-up failure, transport failure
Sheets just fed out of the copier	Take-up failure, transport failure
Perforated sheets: loose-leaf, etc.	Multiple feed due to burrs in perforations
Sheets with two to four holes	Transport failure
Sheets folded in half or Z-folded	Transport failure, distorted image
Sheets weighing 40 g/m² to 50 g/m²	Folded leading edge
Sheets with surface irregularities: letterhead, etc.	Take-up failure
Pencil-written sheets	Dirty originals
Folded sheets	Distorted image, multiple feed, take-up failure
Sheets of a size outside the range detectable by the ADF	Void image

2. COMPONENT IDENTIFICATION

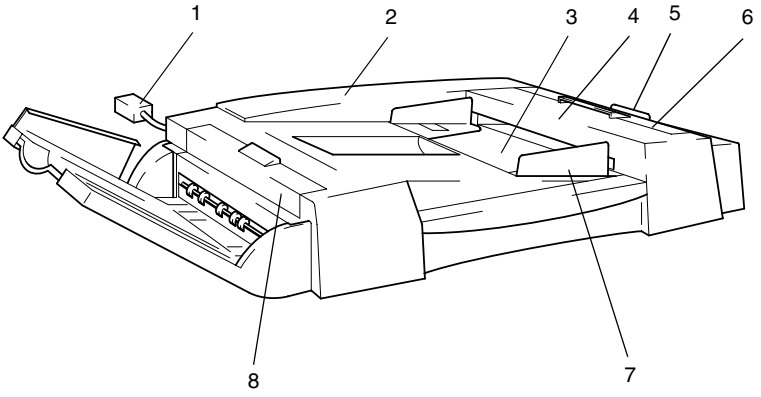

4490M001AA

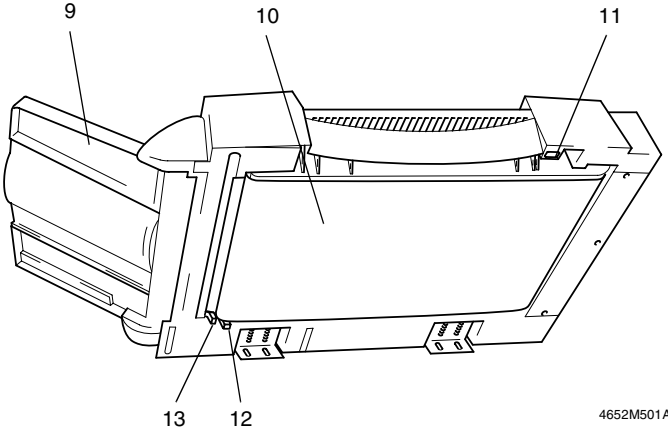

4652M501AA

1. Hookup Cord
2. Rear Cover
3. Document Feed Tray
4. Upper Cover
5. Single Feed Tray
6. Take-Up Cover
7. Document Edge Guide
8. Exit Cover
9. Document Exit Tray
10. Transport Belt
11. Magnet
12. Holder Touch Lever
13. Scale Drive Lever

3. CROSS-SECTIONAL VIEW

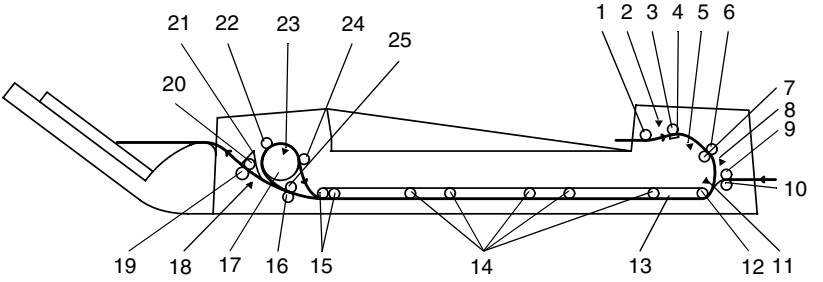

4652M502AA

1. Pick-Up Roll
2. Empty Sensor PC1
3. Take-Up Roll
4. Separator Pad
5. Registration Sensor PC2
6. Registration Driven Roller
7. Registration Drive Roller
8. Single Feed Empty Sensor PC9
9. Single Feed Roller
10. Single Feed Roll
11. Width Sensor 1/2/3 PC5/6/7
12. Transport Belt Drive Roller
13. Transport Belt
14. Transport Rolls
15. Transport Belt Driven Roller
16. Transport Roll
17. Turnover Roller
18. Exit Sensor PC3
19. Exit Roller
20. Exit Roll
21. Turnover/Exit Switching Plate
22. Turnover Roll
23. Turnover Sensor PC4
24. Turnover Roll
25. Transport Roller

4. DRIVE SYSTEM

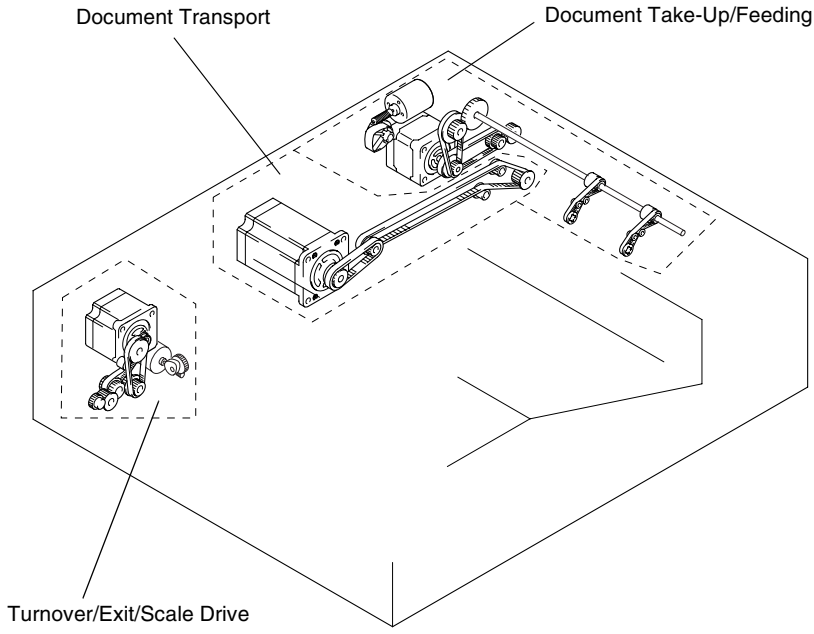

4652M503AA

5. ELECTRICAL COMPONENT LAYOUT

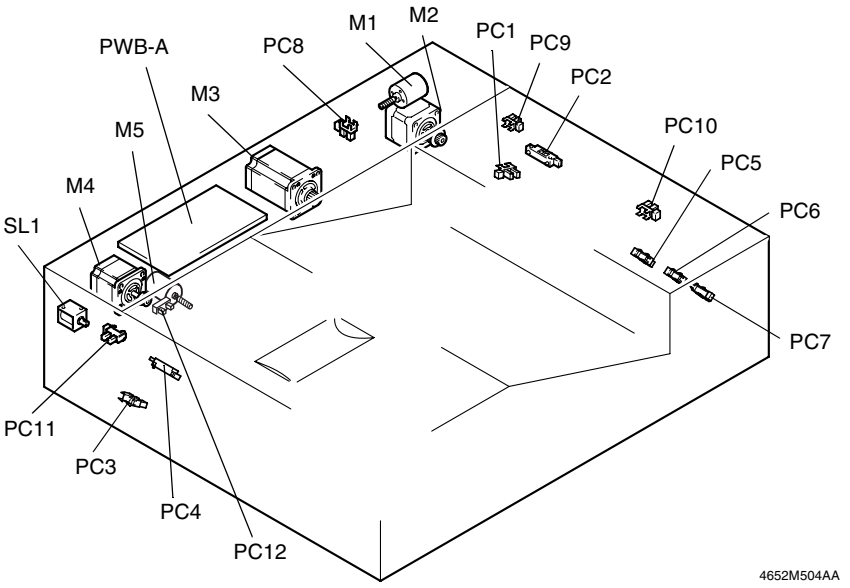

Code	Name	Code	Name
PWB-A	Main Control Board	PC5	Paper Width Sensor 1 (Option)
M1	Pick-Up Motor	PC6	Paper Width Sensor 2
M2	Take-Up Motor	PC7	Paper Width Sensor 3 (Option)
M3	Main Motor	PC8	Pick-Up Sensor
M4	Turnover/Exit Motor	PC9	Single Feed Empty Sensor
M5	Scale Drive Motor	PC10	Take-Up Cover Open/Close Sensor
SL1	Turnover Solenoid		
PC1	Empty Sensor	PC11	Exit Cover Open/Close Sensor
PC2	Registration Sensor	PC12	Scale Drive Sensor
PC3	Exit Sensor		
PC4	Turnover Sensor		

6. DESCRIPTION OF MODES

6-1. Mixed Original Mode

- The copier detects the size of each page of the document as it is taken up and fed in and, according to the size detected, feeds the copy paper of the corresponding size selected from among the available paper sources.
- The mode is mainly used when making copies from a document set consisting of pages of different sizes.

6-2. 1-Sided Mode

- When a multi-page document is being copied, the copier detects the size of only the first page of the document and copies the subsequent pages based on that size detection.
- This saves the copier the time required for detecting the sizes of the subsequent pages of the document, making for a faster and more efficient paper feed timing.

NOTE

If a document of pages of varying sizes is used in this mode, image trouble could result including missing copy image. (The system does not, however, force a misfeed condition.)

6-3. 2-Sided Mode

- The ADF automatically turns over 2-sided originals for a speedy copying operation (copies are made in the order of the first and second pages).

6-4. Single Feed Mode

- This mode may be used when the user wants to make copies from an original for which feeding is not guaranteed (pasted-up sheet, translucent paper, heat-sensitive paper, etc.).
- When a single original is inserted into the Single Feed Tray, the ADF automatically takes it up and feeds it in to let the copier run a single copy cycle.
- Each original is transported at a low speed.

7. DOCUMENT TAKE-UP/FEEDING MECHANISM

7-1. Parts Identification

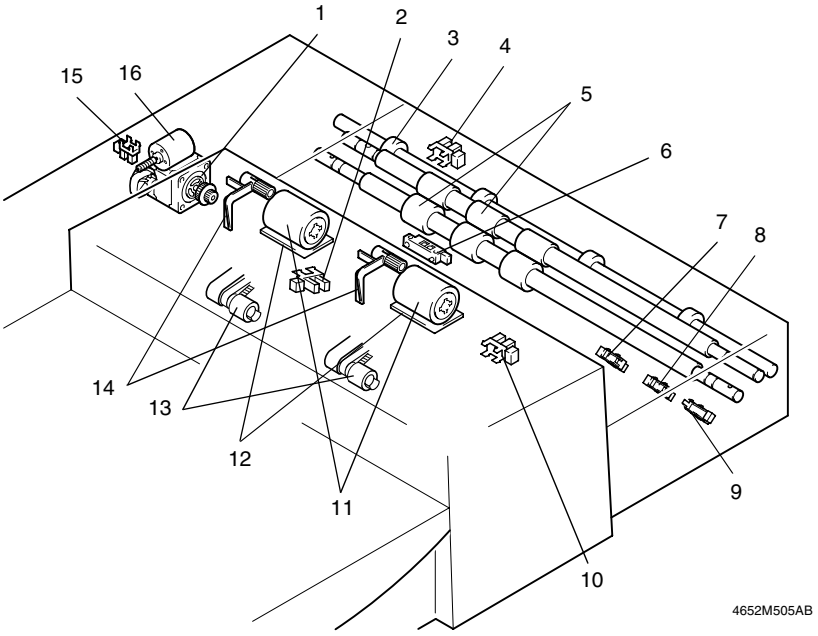

1. Take-Up Motor M2
2. Empty Sensor PC1
3. Single Feed Roller
4. Single Feed Empty Sensor PC9
5. Registration Roller
6. Registration Sensor PC2
7. Paper Width Sensor 1 PC5: Option
8. Paper Width Sensor 2 PC6
9. Paper Width Sensor 3 PC7: Option
10. Take-Up Cover Open/Close Sensor PC10
11. Take-Up Rolls
12. Separator Pads
13. Pick-Up Rolls
14. Document Stoppers
15. Pick-Up Sensor PC8
16. Pick-Up Motor M1

7-2. Document Pick-Up Mechanism

- The document pick-up mechanism consists of the Document Stoppers and Pick-Up Rolls.
- The Document Stoppers determine the leading edge position of the document loaded in the ADF.
- They are in the lowered position when in their standby position and raised when a document take-up sequence is started.
- The Pick-Up Rolls are in the raised position in their standby state and lowered when a document take-up sequence is started, pressing the document set downward during the sequence with the tension of the Document Pressure Springs.
- The operation of the Document Stoppers and Pick-Up Rolls is controlled by Pick-Up Motor, Pick-Up Sensor, and a cam.

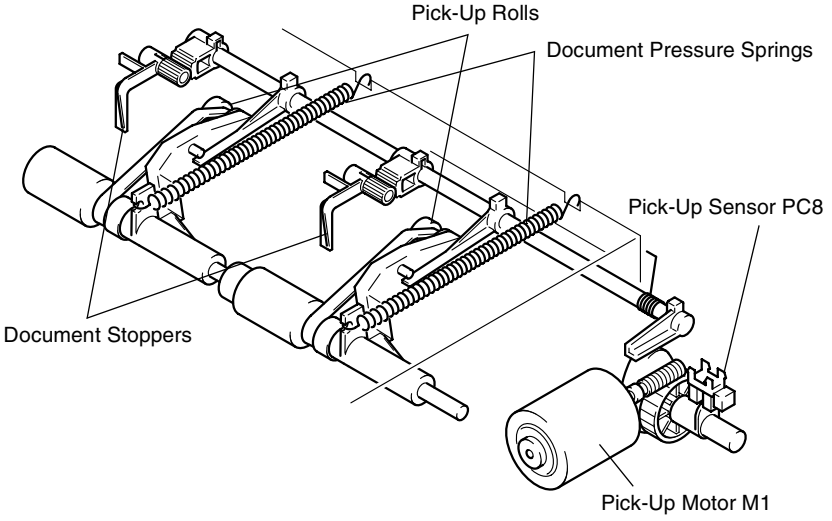

4490M007AB

✻ Control of Operation of the Document Stoppers and Pick-Up Rolls

	PC8 and Cam Operation	Document Stoppers/Pick-Up Rolls Operation
Home position	Pick-Up Sensor PC8 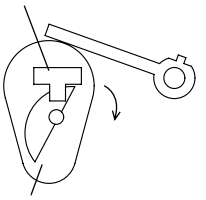 Cam 4490M008AA	Pick-Up Roll 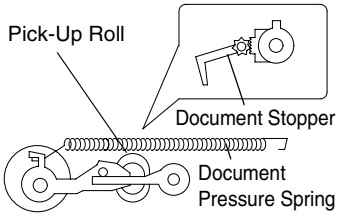 Document Stopper Document Pressure Spring 4490M009AA
Pick-Up Rolls press document; Document Stoppers retract.	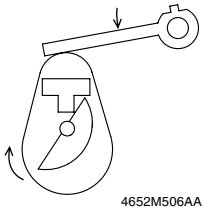 4652M506AA	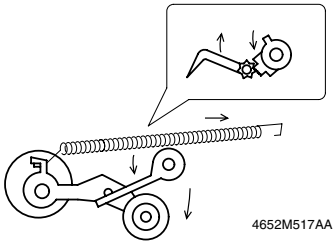 4652M517AA
Home position	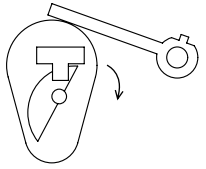 4490M008AA	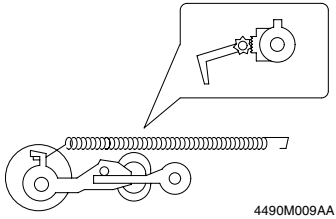 4490M009AA

✻ Pick-Up Motor Control

	CONTROL SIGNAL	ON	OFF	WIRING DIAGRAM
M1	PWB-A PJ8A-2	L	H	7 - H

	CONTROL SIGNAL	Blocked	Unblocked	WIRING DIAGRAM
PC8	PWB-A PJ12A-2	L	H	3 - I

7-3. Document Take-Up Mechanism

- The Pick-Up Rolls and Take-Up Rolls turn to transport the document loaded in the Document Feed Tray up to the Registration Roller.
- The Single Feed Roller, on the other hand, turns to transport the document placed in the Single Feed Tray.
- The Pick-Up Rolls, Take-Up Rolls, and Single Feed Roller are driven by Take-Up Motor.
- To drive the Single Feed Roller, Take-Up Motor is turned backward, at which time the Take-Up Roll Shaft also turns backward. Because of the functioning of the one-way pulley, however, the backward rotation of the shaft is not transmitted to the Pick-Up Rolls or Take-Up Rolls.
- The Front Separator Pads and Separator Pads together function to prevent double feed when two or more pages of a document set are taken up.

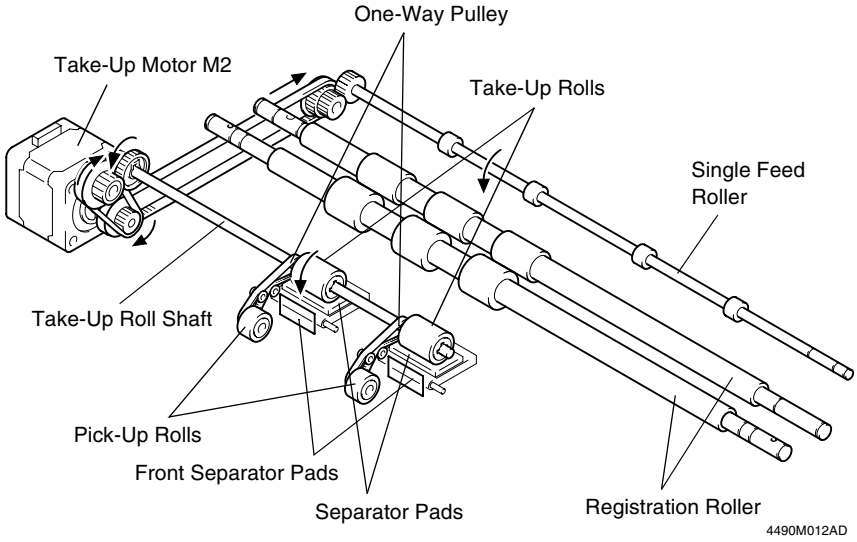

✻ Take-Up Motor Control

- The pulse signals output from PJ7A on PWB-A are supplied to the two coils inside Take-Up Motor and the combination and sequence of the pulse signals energized are varied to turn Take-Up Motor forward or backward.
- The distance over which an original is transported is detected by counting the number of pulses generated.

PWB-A	Sequence				
	1	2	3	4	
PJ7A-5	L	H	H	L	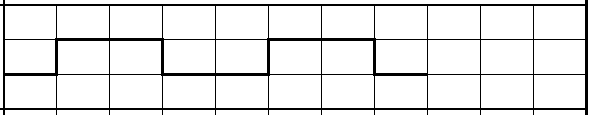
PJ7A-4	L	L	H	H	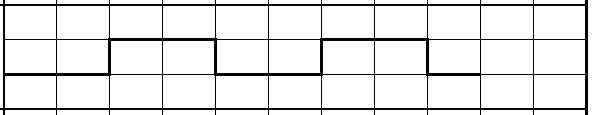
PJ7A-6	H	L	L	H	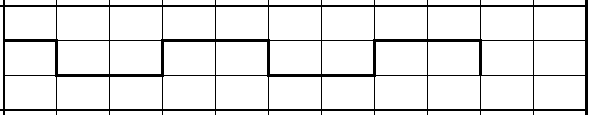
PJ7A-3	H	H	L	L	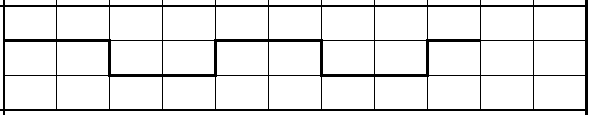
Forward Rotation					Pick-Up Rolls and Take-Up Rolls are turned to take up an original.
Backward Rotation					The Single Feed Roller is turned to take up an original.

	CONTROL SIGNAL	ON	OFF	WIRING DIAGRAM
M2	PWB-A PJ7A-3~6	Pulse Output		7 - I

8. DOCUMENT TRANSPORT MECHANISM

8-1. Parts Identification

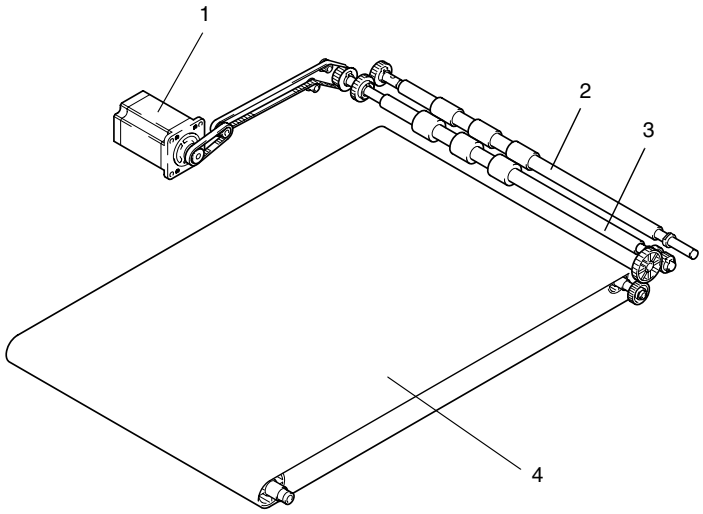

4650M507AA

1. Main Drive Motor M3
2. Registration Driven Roller
3. Registration Drive Roller
4. Transport Belt

8-2. Document Transport Mechanism

- Rotation of the Registration Rollers and Transport Belt results in the original fed from the Document Feed Tray or Single Feed Tray being transported up to the Original Width Scale.
- The Registration Rollers and Transport Belt are driven by Main Drive Motor.

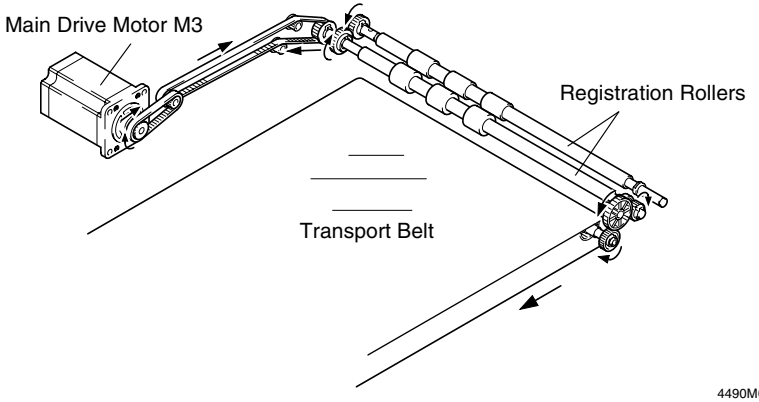

4490M014AA

✻ Main Drive Motor Control

- The pulse signals output from PJ6A on PWB-A are supplied to the two coils inside Main Drive Motor and the combination and sequence of the pulse signals energized are varied to turn Main Drive Motor forward or backward.
- The distance over which an original is transported is detected by counting the number of pulses generated.
- The motor speed is controlled by varying the cycle “A” of the pulse signal.

PWB-A	Sequence				
	1	2	3	4	
PJ6A-3	L	H	H	L	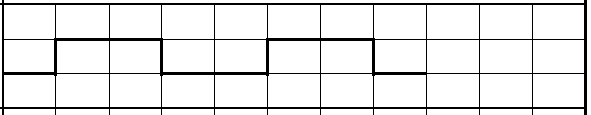
PJ6A-5	L	L	H	H	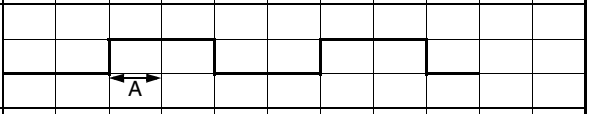
PJ6A-4	H	L	L	H	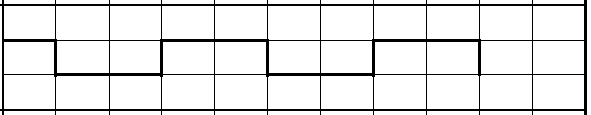
PJ6A-6	H	H	L	L	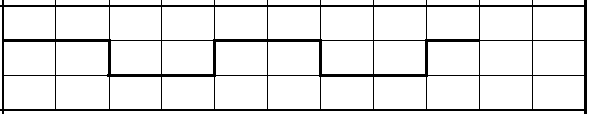
Forward Rotation	→				Transports the original toward the Original Width Scale.
Backward Rotation	←				Transports the original, which has been turned over, towards the take-up section.

	CONTROL SIGNAL	ON	OFF	WIRING DIAGRAM
M3	PWB-A PJ6A-3~6	Pulse Output		8 - G

9. TURNOVER/EXIT MECHANISM

9-1. Parts Identification

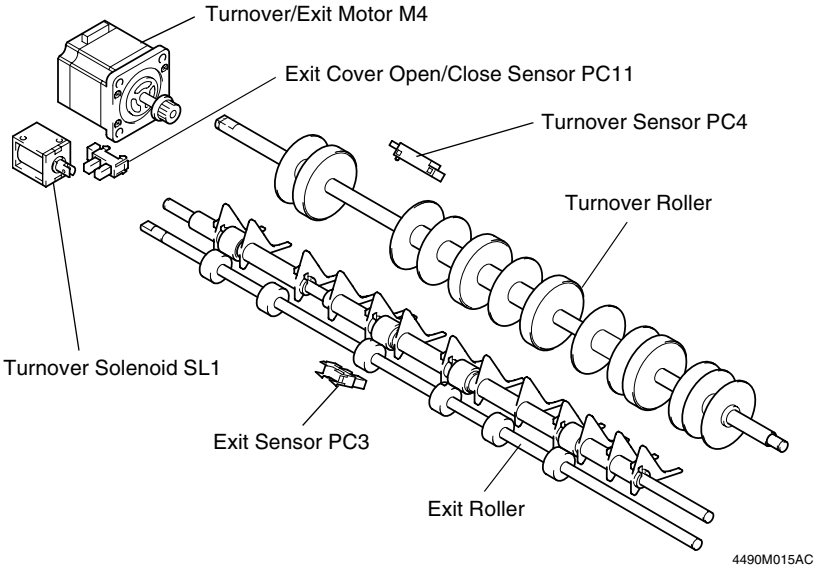

4490M015AC

9-2. Document Transport Mechanism

- The Turnover Roller and Exit Roller turn over or feed out of the ADF the original transported from the transport mechanism.
- The Turnover Roller and Exit Roller are driven by Turnover/Exit Motor.

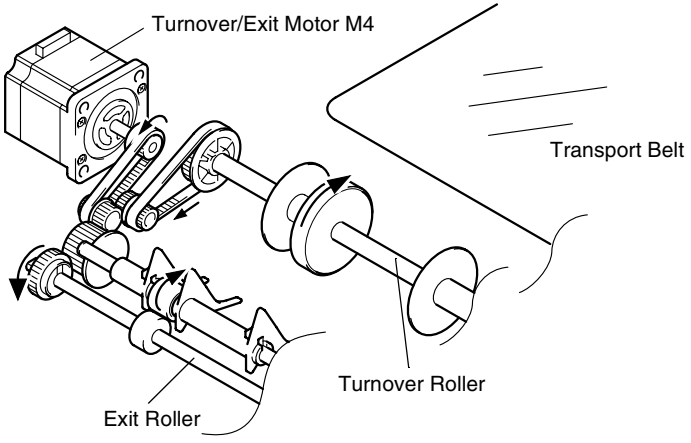

4490M016AC

✻ Turnover/Exit Motor Control

- The pulse signals output from PJ4A on PWB-A are supplied to the two coils inside Turnover/Exit Motor to energize Turnover/Exit Motor.
- The distance over which an original is transported is detected by counting the number of pulses generated.
- The motor speed is controlled by varying the cycle “A” of the pulse signal.

PWB-A	Sequence				
	1	2	3	4	
PJ4A-3	L	H	H	L	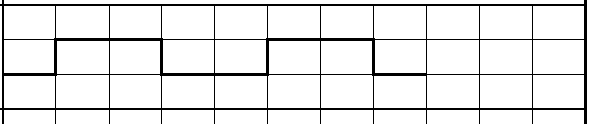
PJ4A-5	L	L	H	H	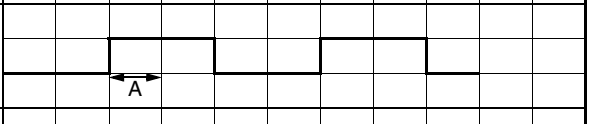
PJ4A-4	H	L	L	H	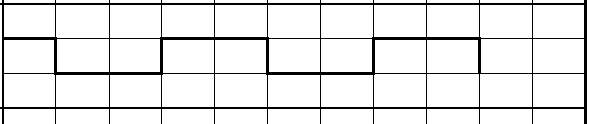
PJ4A-6	H	H	L	L	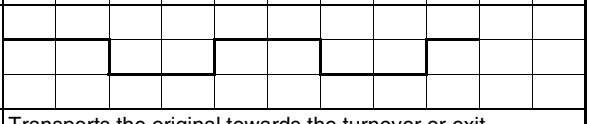
Energized	→				Transports the original towards the turnover or exit mechanism.

	CONTROL SIGNAL	ON	OFF	WIRING DIAGRAM
M4	PWB-A PJ4A-3~6	Pulse Output		8 - C

	CONTROL SIGNAL	Blocked	Unblocked	WIRING DIAGRAM
PC3	PWB-A PJ11A-2	L	H	3 - C
PC4	PWB-A PJ3A-5	L	H	3 - C
PC11	PWB-A PJ3A-2	L	H	3 - B

9-3. Turnover/Exit Switching Mechanism

- The turnover/exit switching mechanism uses the Turnover/Exit Switching Plate which is swung downward or upward to change the document path, thereby allowing the original to be turned over or ejected from the ADF.
- The switching plate is actuated as Turnover Solenoid is energized and deenergized.

✻ Arrow indicates the direction of motion when SL1 is energized.

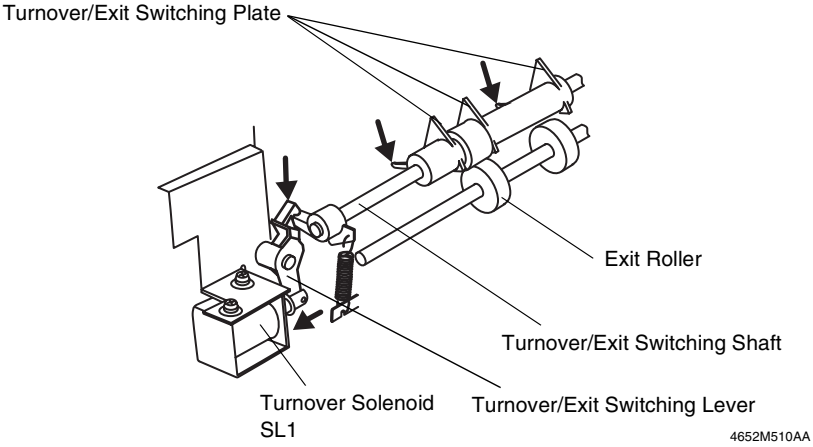

<For Exit> SL1-Deenergized

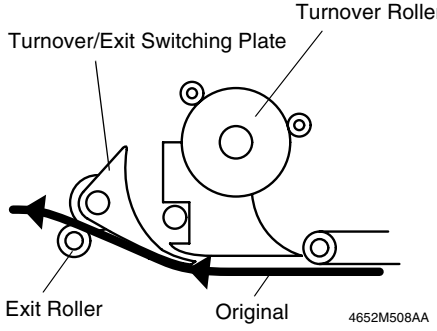

<For Turnover> SL1-Energized

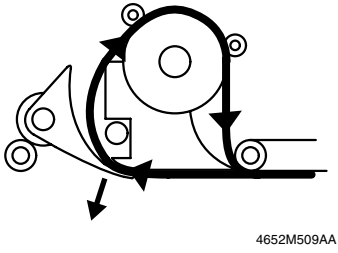

	CONTROL SIGNAL	ON	OFF	WIRING DIAGRAM
SL1	PWB-A PJ5A-2	L	H	8 - B

10. SCALE DRIVE MECHANISM

10-1. Parts Identification

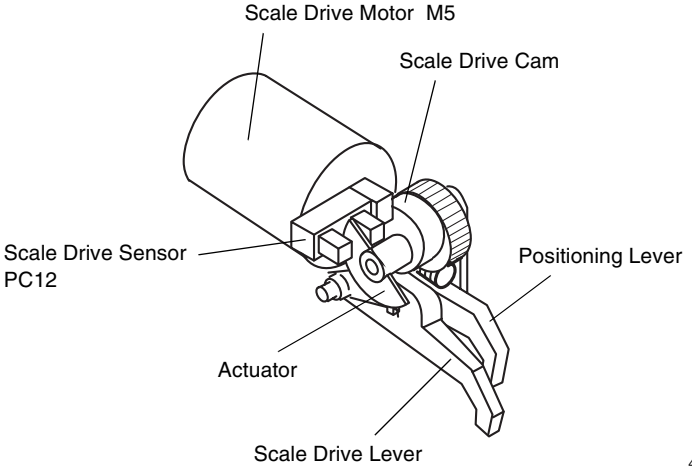

10-2. Pressing of the Scale Drive Mechanism

- The Scale Drive Mechanism is pressed against the Scale Holder to ensure positive action of the Original Width Scale.

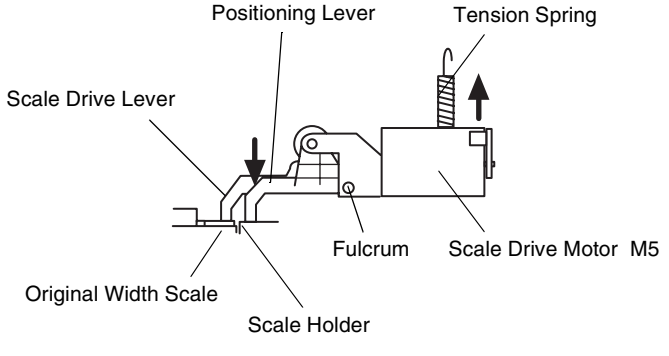

10-3. Scale Drive Mechanism

- The Original Width Scale is installed on the left edge of the Original Glass. To allow the originals to be turned over and ejected out of the ADF even in this configuration, a mechanism is provided that retracts the Original Width Scale and brings it back to the original position.

✻ Control of Operation of the Scale Drive Lever

	Scale Drive Sensor and Cam Operation
Home Position ↓ Scale Drive Lever Down ↓ Original Width Scale is Retracting ↓ Scale Drive Lever Up ↓ Home Position	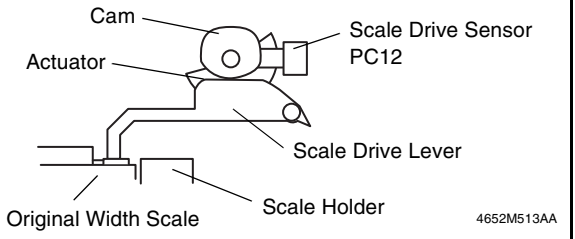 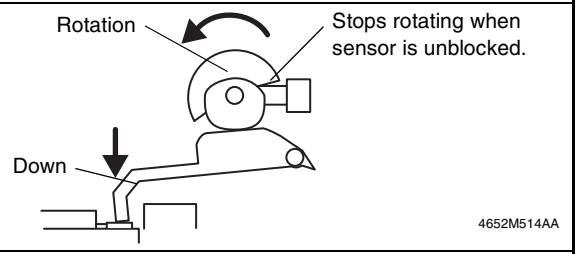 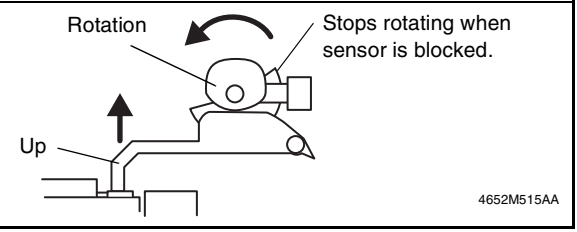

	CONTROL SIGNAL	ON	OFF	WIRING DIAGRAM
M5	PWB-A PJ14A-2	L	H	7 - A

	CONTROL SIGNAL	Blocked	Unblocked	WIRING DIAGRAM
PC12	PWB-A PJ13A-2	H	L	3 - D

10-4. Thin Paper Mode

- A function is provided to prevent a thin original from being bent as it is brought to contact with the Original Width Scale. It brings the original to a stop at an exact point without letting it hit against the Original Width Scale. In the Thin Orig. mode, the Original Width Scale is in the retracted position.

✻ Set method: Utility ⟶ Administrator mode ⟶ Expert User's Mode ⟶ Thin Orig.
Functioning mode: 1-Side No Detect mode, 1-Side Mixed orig. mode, Single feeding mode

11. MISCELLANEOUS

11-1. Document Size Detection Mechanism

- The document size is determined by means of two different systems of document width detection and document length detection.

(1) Document Width Detection

- The width of an original is detected by the combination of the “L” and “H” states of Width Sensors 1 PC5, 2 PC6, and 3 PC7, as detected while the original is being taken up.
- Each sensor is located as follows with reference to the Document Edge Guide in the rear.
  PC5: 236.5 mm; PC6: 268 mm; PC7: 288 mm

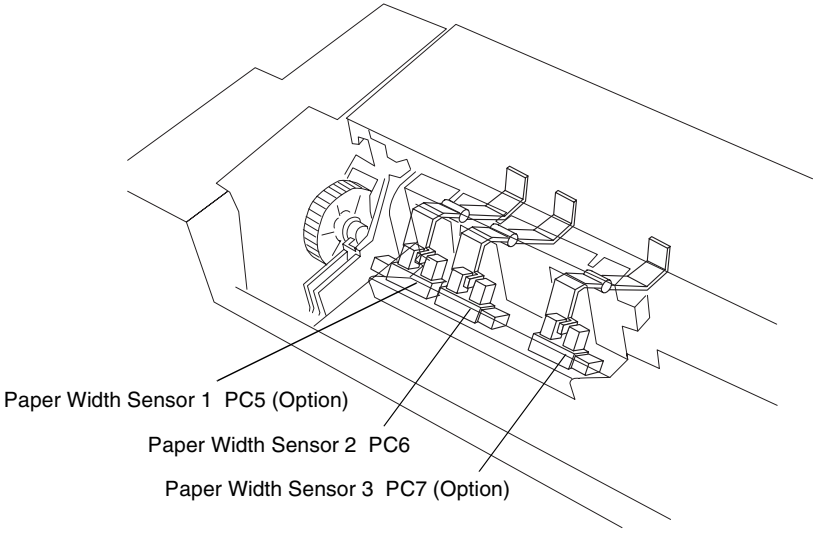

4652M518AA

(2) Document Length Detection

- The length of an original is detected by counting the number of pulses generated by Main Motor for the period of time from when the Registration Roller starts turning to when the trailing edge of the original moves past Registration Sensor.
- In the Single Feed mode, the period of time for counting the number of pulses is up to when the trailing edge of the original moves past Single Feed Empty Sensor.

(3) Document Size Detection

• Details of Paper Width Sensor/Document Length and Detectable Document Sizes
Standard (PC6 only)

Metric Area		
PC6	Document Length (mm)	Document Size
H	~ 158.5	A5 C
	158.6 ~ 192.0	B5 C
	192.1 ~ 220.0	A5 L
	220.1 ~ 267.0	B5 L
	267.1 ~ 289.4	8-1/2 × 11 L
	289.5 ~ 307.0	A4 L
	307.1 ~ 340.0	8 × 13 L
	340.1 ~ 374.0	B4 L
	374.1 ~	A3 L
L	~ 220.0	A4 C
	220.1 ~ 391.0	11 × 15 L
	391.1 ~	A3 L

Inch Area		
PC6	Document Length (mm)	Document Size
H	~ 149.7	5-1/2 × 8-1/2 C
	149.8 ~ 225.9	5-1/2 × 8-1/2 L
	226.0 ~ 289.4	8-1/2 × 11 L
	289.5 ~ 307.0	A4 L
	307.1 ~ 365.6	8-1/2 × 14 L
	365.7 ~	11 × 17 L
L	~ 225.9	8-1/2 × 11 C
	226.0 ~ 391.0	11 × 15 L
	391.1 ~	11 × 17 L

Standard with Options (PC5, 6, 7)

Paper Width sensor			Document Length (mm)	Document Size	
PC5	PC6	PC7		Metric Area	Inch Area
H	H	H	~ 158.5	A5 C	5-1/2 × 8-1/2 C
			158.6 ~ 225.9	A5 L	5-1/2 × 8-1/2 L
			226.0 ~ 267.0	B5 L	
			267.1 ~ 289.4	8-1/2 × 11 L	
			289.5 ~ 307.0	A4 L	
			307.1 ~ 340.0	8 × 13 L	
			340.1 ~ 365.6	8 × 14 L	
			365.7 ~	A3 L	
H	H	L	~ 192.0	B5 C	
			192.1 ~ 220.0	A4 C	
			220.1 ~ 225.9	8-1/2 × 11 C	
			226.0 ~ 289.4	8-1/2 × 11 L	
			289.5 ~ 374.0	B4 L	
			374.1 ~	A3 L	
H	L	H or L	~ 225.9	8-1/2 × 11 C	
			226.0 ~ 391.0	11 × 15 L	
			391.1 ~	11 × 17 L	
L	H or L	H or L	~ 220.0	A4 C	
			220.1 ~	A3 L	

11-2. 15° Open Detection Mechanism

- To enable the copier to detect the document size when the ADF is used as the Original Cover of the copier, there is the Lever Actuator provided in the ADF body.
- The Lever Actuator moves the Original Cover Detecting Lever mounted on the copier.

11-3. Raised/Lowered Position Detection Mechanism

- There is a magnet installed in the ADF body to allow the copier to know that the ADF is raised or lowered.
- This magnet actuates the Size Reset Switch on the copier.

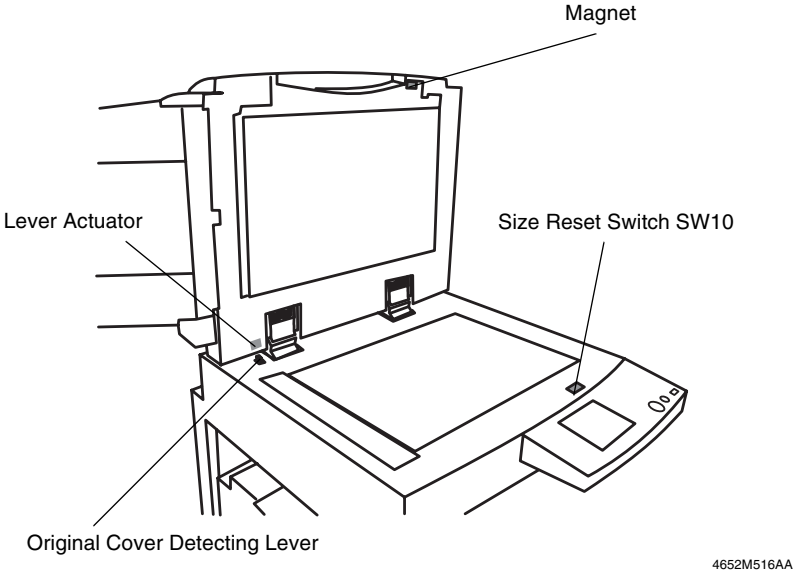

4652M516AA

TEST MODES

1. OUTLINE OF THE TEST MODES

- The test modes for the ADF may be initiated from the “Tech. Rep. Mode” menu screen provided for the copier or by changing the position of a DIP switch key on PWB-A of the ADF.
- For the “Tech. Rep. Mode” menu screen, see “SWITCHES ON PWBs: Tech. Rep. Mode” of the copier’s Service Manual.

1-1. Test Mode Setting Procedure

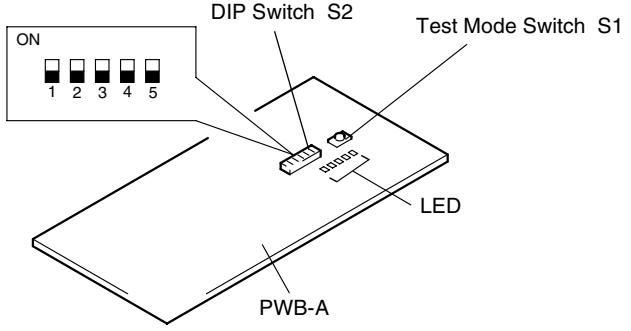

4490S001AB

- Flip S2-5 to the ON position and turn OFF and ON the Power Switch of the copier. This sets the ADF into the Test mode.
- Various types of Test Mode operations are available, each being selected with a particular combination of ON and OFF settings of S2-1 to -5. To run a particular operation, make the correct DIP switch key settings, raise and lower the ADF to validate the settings, and press S1 to start the operation.

1-2. Types of Test Modes

- The following four types of Test Modes are available:
  Paper Passage Check
  Unit Check
  Sensor Check
  Board Check

2. PAPER PASSAGE CHECK

2-1. Paper Passage Modes

- Each paper passage mode starts by setting the DIP switch of S2.

Paper Passage Mode		Setting the DIP switch of S2				
		1	2	3	4	5
1-Sided	Continuous					ON
	Intermittent				ON	ON
Mixed Original	Continuous	ON				ON
	Intermittent	ON			ON	ON
2-Sided	Continuous		ON			ON
	Intermittent		ON		ON	ON
Single Feed	Intermittent	ON	ON			ON

(Blank means OFF.)

✻ To adjust the stop position, flip S2-3 to ON. The adjustment procedure will be found in DIS/REASSEMBLY, ADJUSTMENT to follow.

2-2. Paper Passage Check Procedure

1. Turn OFF the Power Switch of the copier and flip S2-5 to ON.
2. Turn ON the Power Switch of the copier. (This sets the ADF into the Test Mode.)
3. Make the necessary settings of S2-1 to -4 for the desired paper passage mode.
4. Raise and lower the ADF.
5. Load a document set in the Document Feed Tray.
6. Press S1 once.
7. This starts the paper passage check.

✻ To interrupt a continuous paper passage mode (S2-4: OFF), press S1 once. If S1 is then pressed a second time, the ADF feeds all originals out of itself to terminate the paper passage mode.
✻ In an intermittent paper passage mode (S2-4: ON), each press of S1 lets the ADF feed an original through itself.
✻ To select either the continuous or intermittent mode, turn OFF the Power Switch of the copier, flip S2-4 to OFF and then ON, and turn ON the Power Switch.

2-3. Indication by LEDs in Paper Passage Check

(1) Indication by LEDs in closure failure

LED Indication					Description
1	2	3	4	5	
◎	❍	❍	❍	●	Take-Up Cover
◎	❍	❍	●	❍	ADF open
◎	❍	●	❍	❍	Exit Cover

(◎: Blinking, ❍: OFF, ●: ON)
LED1 stays blinking at all times.

(2) Indication by LEDs in Misfeed, Trouble and Warning

LED Indication					Description
1	2	3	4	5	
◎	❍	❍	❍	❍	Standby
◎	❍	❍	❍	◎	Document not reaching Registration Sensor.
◎	❍	❍	◎	❍	Document staying at Registration Sensor.
◎	❍	❍	◎	◎	Document not reaching Exit Sensor.
◎	❍	◎	❍	❍	Document staying at Exit Sensor.
◎	❍	◎	❍	◎	Document left after operation is started.
◎	❍	◎	◎	❍	Pick-Up Motor M1 malfunction.
◎	❍	◎	◎	◎	Document staying at Single Feed Empty Sensor.
◎	◎	❍	❍	❍	Document not reaching Turnover Sensor.
◎	◎	❍	❍	◎	Document staying at Turnover Sensor.
◎	◎	❍	◎	❍	Scale Drive Motor M5 malfunction.
◎	●	●	●	●	Document staying at Document Feed Tray or Single Feed Tray. -- Warning
◎	◎	◎	◎	◎	Document left at before operation is started. -- Warning

(◎: Blinking, ❍: OFF, ●: ON)
LED1 stays blinking at all times.
Displays the control internal data while paper is being fed through the ADF.

3. UNIT CHECK

3-1. Unit Check Modes

- Each unit check mode starts by setting the DIP switch of S2.

Unit Check Mode		Setting the DIP switch of S2				
		1	2	3	4	5
Pick-Up Motor	M1		ON			
Take-Up Motor	M2	ON	ON			
Main Drive Motor	M3			ON		
Turnover/Exit Motor	M4	ON		ON		
Scale Drive Motor	M5		ON	ON		
Turnover/Exit Switching Solenoid	SL1	ON	ON	ON		

(Blank means OFF.)

✻ Flipping S2-4 to ON before the Power Switch is turned ON allows for setting the ADF into the Durability mode which, once started, continues running until stopped.

3-2. Unit Check Procedure

1. Turn OFF the Power Switch of the copier and flip S2-5 to ON. (Flip S2-4 to ON for the Durability mode.)
2. Turn ON the Power Switch of the copier. (This sets the ADF into the Test Mode.)
3. Make the necessary settings of S2-1 to -5 for the desired unit check mode.
4. Raise and lower the ADF.
5. This completes the setting of the unit check mode.

(1) Pick-Up Motor check

- Each press of S1 repeats the operation shown below.

No. of Times S1 is Pressed	LED Indication					Operation
	1	2	3	4	5	
0	◎	❍	❍	❍	❍	Standby
1	◎	❍	❍	❍	●	Rotation (Take-Up Rolls down)

(◎: Blinking, ❍: OFF, ●: ON)

(2) Take-Up Motor check

- Each press of S1 repeats the operation shown below.
- The motor automatically stops turning in about 60 second.

No. of Times S1 is Pressed	LED Indication					Operation
	1	2	3	4	5	
0	◎	❍	❍	❍	❍	Standby
1	◎	❍	❍	❍	●	Forward rotation (150 mm/s)
2	◎	❍	❍	●	❍	Stop
3	◎	❍	❍	●	●	Backward rotation (300 mm/s)

(◎: Blinking, ❍: OFF, ●: ON)

(3) Main Motor check

- Each press of S1 repeats the operation shown below.
- The motor automatically stops turning in about 60 second.

No. of Times S1 is Pressed	LED Indication					Operation
	1	2	3	4	5	
0	◎	❍	❍	❍	❍	Standby
1	◎	❍	❍	❍	●	Forward rotation (660 mm/s)
2	◎	❍	❍	●	❍	Stop
3	◎	❍	❍	●	●	Backward rotation (660 mm/s)
4	◎	❍	●	❍	❍	Stop
5	◎	❍	●	❍	●	Forward rotation (300 mm/s)

(◎: Blinking, ❍: OFF, ●: ON)

(4) Turnover/Exit Motor check

- Each press of S1 repeats the operation shown below.
- The motor automatically stops turning in about 60 second.

No. of Times S1 is Pressed	LED Indication					Operation
	1	2	3	4	5	
0	◎	❍	❍	❍	❍	Standby
1	◎	❍	❍	❍	●	Rotation (660 mm/s)
2	◎	❍	❍	●	❍	Stop
3	◎	❍	❍	●	●	Rotation (300 mm/s)

(◎: Blinking, ❍: OFF, ●: ON)

(5) Scale Drive Motor check

- Each press of S1 repeats the operation shown below.
- The motor automatically stops turning in about 60 second.

No. of Times S1 is Pressed	LED Indication					Operation
	1	2	3	4	5	
0	◎	❍	❍	❍	❍	Standby
1	◎	❍	❍	❍	●	Rotation (Original Width Scale is Retracting)

(◎: Blinking, ❍: OFF, ●: ON)

(6) Turnover Solenoid check

- Each press of S1 repeats the operation shown below.
- The solenoid stops operating in about 60 second.

No. of Times S1 is Pressed	LED Indication					Operation
	1	2	3	4	5	
0	◎	❍	❍	❍	❍	Standby
1	◎	❍	❍	❍	●	ON/OFF is repeated at one cycle of the second.

(◎: Blinking, ❍: OFF, ●: ON)

4. SENSOR CHECK

4-1. Sensor Check Mode

- "Tech. Rep. Mode" menu screen on the copier Touch Panel:

1. Select "ADF Check" on the "Tech. Rep. Mode" menu screen.

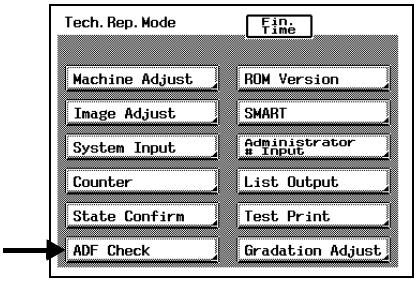

4652S501CA

2. Select "I/O Check".
3. Using a sheet of paper or other device, activate the sensor to be checked and check the data shown on the screen (paper present: 1; paper not present: 0).

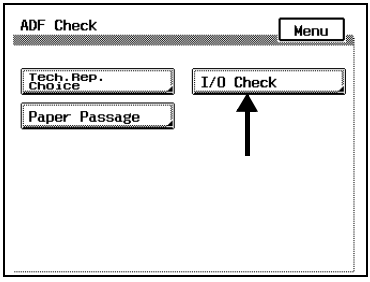

4652S502CA

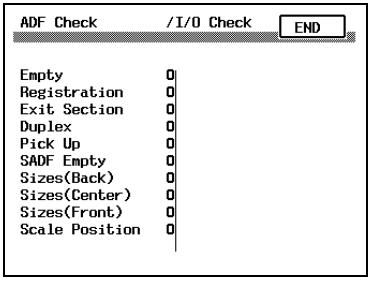

4652S503CA

- DIP Switch S2 on PWB-A of this ADF:

Mode	Setting the DIP switch of S2				
	1	2	3	4	5
Sensor Check 1					
Sensor Check 2	ON				

(Blank means OFF.)

Sensor Check 1:
- Empty Sensor PC1
- Registration Sensor PC2
- Exit Sensor PC3
- Turnover Sensor PC4

Sensor Check 2:
- Single Feed Empty Sensor PC9
- Width Sensor 1 PC5 (option)
- Width Sensor 2 PC6
- Width Sensor 3 PC7 (option)

4-2. Sensor Check Procedure

1. Turn OFF the Power Switch of the copier and flip S2-5 to ON.
2. Turn ON the Power Switch of the copier. (This sets the ADF into the Test Mode.)
3. Make the necessary settings of S2-1 to -5 for the desired sensor check mode.
4. Raise and lower the ADF.
5. This completes the setting of the sensor check mode.

(1) Sensor Check 1 check

- Using a sheet of paper or other device, activate the sensor to be checked and check for the LED condition.

Sensor	LED Indication					Operation
	1	2	3	4	5	
Empty Sensor PC1	◎	❍	❍	❍	●	Blocked
Registration Sensor PC2	◎	❍	❍	●	❍	Blocked
Exit Sensor PC3	◎	❍	●	❍	❍	Unblocked
Turnover Sensor PC4	◎	●	❍	❍	❍	Blocked

(◎: Blinking, ❍: OFF, ●: ON)

(2) Sensor Check 2 check

- Using a sheet of paper or other device, activate the sensor to be checked and check for the LED condition.

Sensor	LED					Operation
	1	2	3	4	5	
Single Feed Empty Sensor PC9	◎	❍	❍	❍	●	Blocked
Width Sensor 1 PC5 (option)	◎	❍	❍	●	❍	Unblocked
Width Sensor 2 PC6	◎	❍	●	❍	❍	Unblocked
Width Sensor 3 PC7 (option)	◎	●	❍	❍	❍	Unblocked

(◎: Blinking, ❍: OFF, ●: ON)

5. BOARD CHECK

5-1. Board Check Mode

- Each electrical component is energized sequentially to determine if the drive circuit of PWB-A is fully operational.

1. Turn OFF the Power Switch of the copier and DIP switch to ON.

Mode	Setting the DIP switch of S2				
	1	2	3	4	5
Board Check Mode				ON	

(Blank means OFF.)

2. Turn ON the Power Switch of the copier.
3. This completes the setting of the board check mode.

5-2. Board Check Procedure

- Each press of S1 energizes the following electrical components in that order, one at a time.
- The motor automatically stops turning in about 60 second.

No. of Times S1 is Pressed	LED Indication					Operation
	1	2	3	4	5	
0	◎	❍	❍	❍	❍	Standby
1	◎	❍	❍	❍	●	Scale Drive Motor turns. Turnover Solenoid ON. (1 s)
2	◎	❍	❍	●	❍	Pick-Up Motor turns.
3	◎	❍	❍	●	●	Take-Up Motor turns. (150 mm/s)
4	◎	❍	●	❍	❍	Main Motor turns. (660 mm/s)
5	◎	❍	●	❍	●	Turnover/Exit Motor turns. (660 mm/s)

DIS/REASSEMBLY, ADJUSTMENT

1. MAINTENANCE SCHEDULE

- To ensure good copies and an extended service life of the Duplex Unit, it is recommended that the maintenance jobs described in this schedule be carried out.

PM Parts	Maintenance Schedule Cycle		Tools Used for Cleaning	Parts No.	QTY	PM Counter	Reference Page
	Clean	Replace					
Pick-Up Roll	30K	120K	Cloth, Alcohol	4490-3504-xx	2	ADF Feed	☞ D-3
Take-Up Roll				4490-3505-xx	2		☞ D-3
Separator Pad				4652-3472-xx	2		☞ D-3
Transport Belt		–		–	1		
Registration Drive Roller				–	1		
Registration Driven Roller				–	1		
Turnover Roller				–	1	ADF Rev.	
Turnover Roll				–	4		
Exit Roller				–	1	ADF Feed	
Exit Roll				–	4		
Reflector-type sensor	120K		Blower brush	–	2		

K = 1,000 sheets

✻ Perform the service job based on the values of the PM Counter of the copier.

✻ The Pick-Up Roll, Take-Up Roll and Separator Pad should be replaced as a set.

✻ During regular maintenance visit, clean or replace parts an necessary.

- The above information is subject to change without notice.

2. DISASSEMBLY

2-1. Removal of the Transport Belt

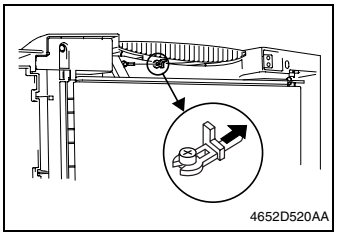

1. Snap off the C-clip.

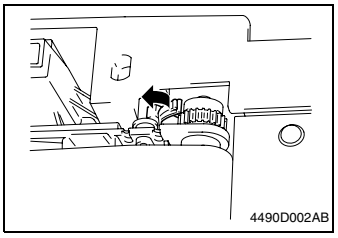

2. Unlock the holder that holds the Transport Belt Drive Roller.

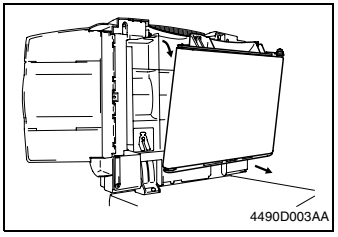

3. Pull the Transport Belt Roller Assy toward you and remove it from the ADF.

NOTE

- At reinstallation, make sure that the mylar on the right-hand side does not sneak under the Transport Belt.

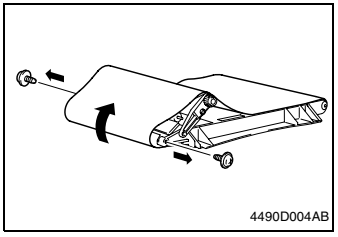

4. Remove two screws and bend the roller unit inward.

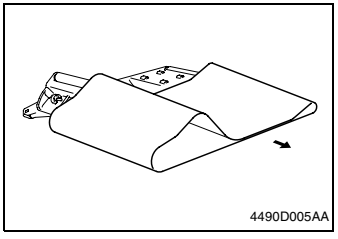

5. Remove the Transport Belt.

2-2. Removal of the Pick-Up Rolls, Take-Up Rolls, and Separator Pads

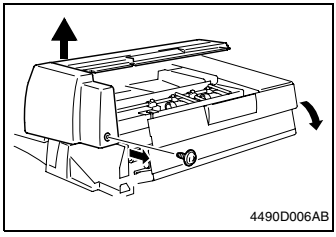

1. Open the Take-Up Cover and remove one screw and the Upper Cover.

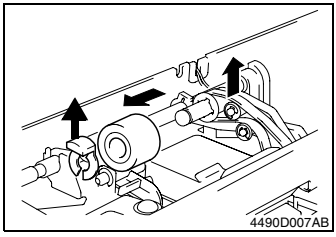

2. Lift the Pick-Up Roll Arm.
3. Snap off the C-clip from the Pick-Up Roll Shaft and remove the Pick-Up Roll.

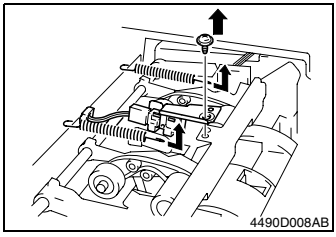

4. Unhook the two springs from the Pick-Up Roll Arm.
5. Remove one screw and the Paper Empty Sensor.

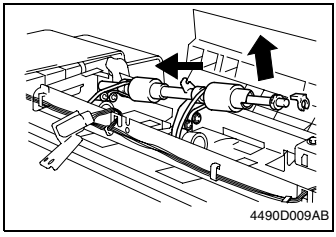

6. Snap off the C-clip.
7. Slide off the bushing and raise the shaft.

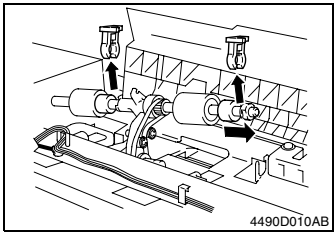

8. Snap off the C-clips and remove the Take-Up Rolls from their shaft.

NOTE

When reinstalling the Take-Up Rolls, make sure that the blue end of the one-way bearing is on the side opposite the Take-Up Roll.

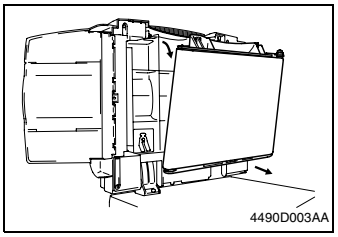

9. Remove the Transport Belt Roller Assy.
☞ D-2

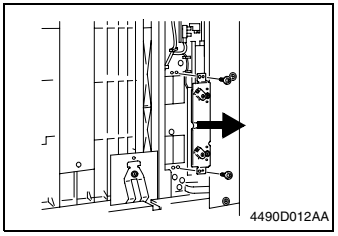

10. Remove two screws and the Separator Pad Assy.

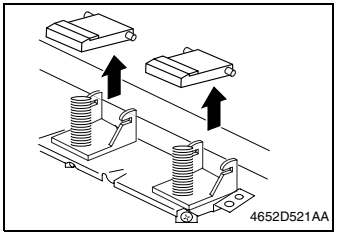

11. Remove the Separator Pads.

3. ADJUSTMENTS

- NEVER attempt to adjust “Registration Loop” under “Tech. Rep. Choice” in the field. It is only for factory adjustment.
- Before starting any of the adjustment procedures, take necessary steps to prevent the Original Width Scale from interfering with the procedures.

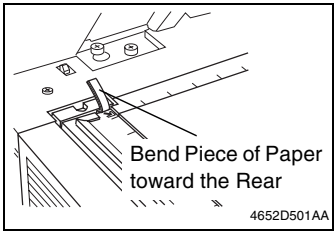

1. Press down the Original Width Scale and insert a piece of paper into the space in the Scale Holder in the rear. Make sure that the Original Width Scale remains lower than the surface of the Original Glass.

NOTE

- *Bend the piece of paper inserted toward the rear to ensure that it will not be in the way through which originals move.*

3-1. Adjustment of Skew in the ADF

Requirement: Skew should be 0.35% or less with respect to the document length.
For A4 crosswise: 1.0 mm

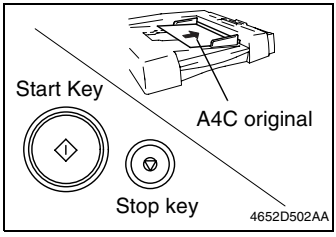

1. Load an A4C original in the Document Feed Tray and select 1-Sided mode.
2. Press the Start key.
3. Press the Stop key when the original is taken up and then the scan motion stops.
4. Gently raise the ADF.

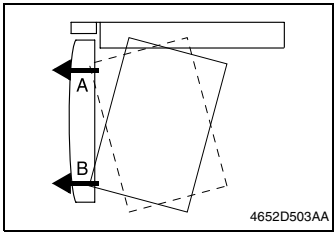

5. Check in which direction, A or B, the original positioned on the Original Glass tilts.
6. If the specifications are not met, perform the following steps 7 through 9.
   Specifications: 1 mm or less

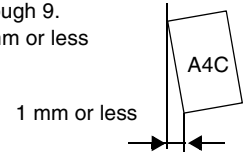

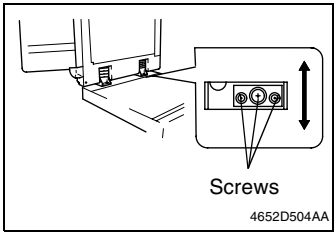

7. Loosen the three screws of the left hinge.
8. If the original tilts in the direction of A:
   Move the ADF to the front.
   If the original tilts in the direction of B:
   Move the ADF to the rear.
9. Tighten the three screws.

✻ After this adjustment has been made, perform the following steps: Adjustment of the Document Feed Tray Reference Position and Adjustment of the Document Stop Position in each mode.

3-2. Adjustment of the Document Feed Tray Reference Position

Requirement: The deviation of the edge of the original with respect to the Original Length Scale should be 4 ± 1 mm.

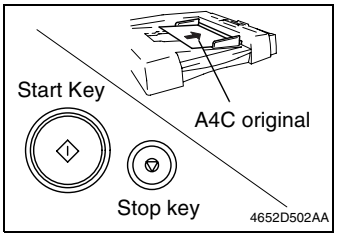

1. Load an A4C original in the Document Feed Tray and select 1-Sided mode.
2. Press the Start key.
3. Press the Stop key when the original is taken up and then the scan motion stops.
4. Gently raise the ADF.

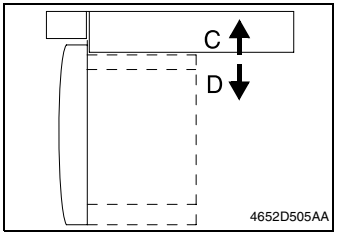

5. Check in which direction, C or D, the original positioned on the Original Glass deviates with respect to the Original Length Scale.
6. If the specifications are not met, perform the following steps 7 through 9.
   Specifications: 4 ± 1 mm

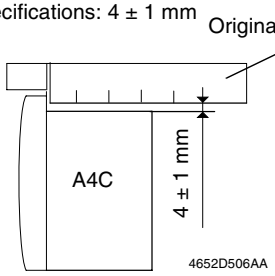

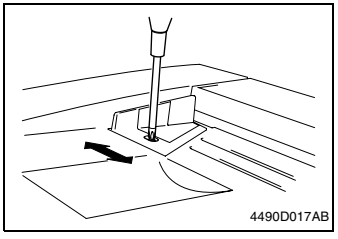

7. Loosen the screw shown.
8. 3 mm or less:
   Move the Document Edge Guide to the front.
   5 mm or more:
   Move the Document Edge Guide to the rear.
9. Tighten the screw.

3-3. Adjustment of the Single Feed Tray Reference Position

Requirement: The deviation of the edge of the original with respect to the Original Length Scale should be 4 ± 1 mm.

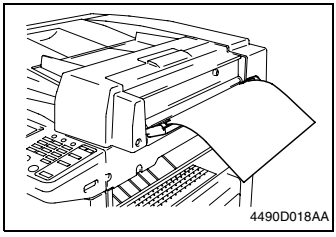

1. Insert an original into the Single Feed Tray.
2. Press the Stop key when the original is taken up and then the scan motion stops.
3. Gently raise the ADF.

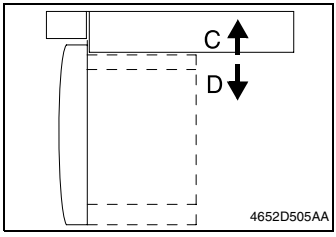

4. Check in which direction, C or D, the original positioned on the Original Glass deviates with respect to the Original Length Scale.
5. If the specifications are not met, perform the following steps 6 through 8.
   Specifications: 4 ± 1 mm

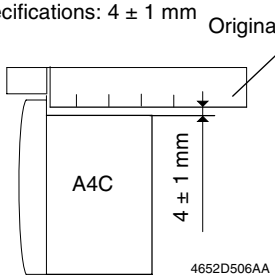

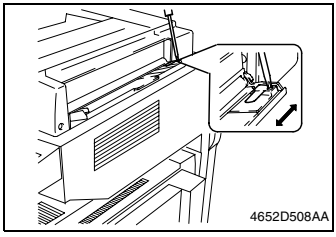

6. Loosen the screw shown.
7. 3 mm or less:
   Move the Document Edge Guide to the front.
   5 mm or more:
   Move the Document Edge Guide to the rear.
8. Tighten the screw.

3-4. Adjustment of the Document Stop Position in the 1-Sided and 1-Sided Mixed Original Mode

Requirement: The leading edge of the original should be located 1 to 3 mm toward the exit side away from the end face of the Original Width Scale.

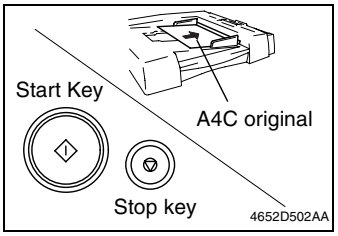

1. Load an A4C original in the Document Feed Tray and select 1-Sided mode.
2. Press the Start key.
3. Press the Stop key when the original is taken up and then the scan motion stops.
4. Gently raise the ADF.

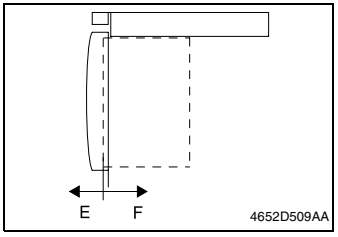

5. Determine how much (in mm) the original positioned on the Original Glass is off in the direction of E or F with respect to the Original Width Scale.
6. If the specifications are not met, perform the following steps 7 through 9.
   Specifications: 1~3 mm

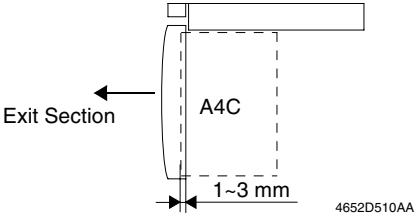

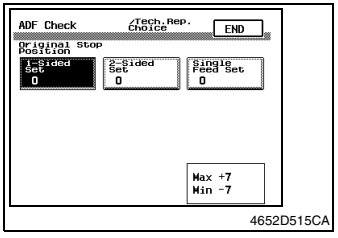

7. Select the functions in the following order: Tech. Rep. Mode → ADF check → Tech. Rep. Choice → Original Stop Position → 1-Sided Set
8. That follows: adjust the document stop position. Referring to “Document Stop Position Setting Procedure”
9. Go back to the Basic screen.

✻ Document Stop Position Setting Procedure:

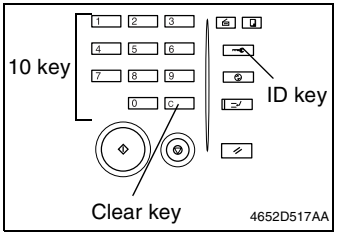

1. Select the appropriate paper passage mode (the selected mode is highlighted).
2. Using the Clear key, clear the numeric value.
3. Enter the new value from the 10-Key Pad. (Use the ID key to change the sign.)
   - Select + to move in the direction of F.
   - Select - to move in the direction of E.
4. Touch [END].
5. Make the paper passage check.

3-5. Adjustment of the Document Stop Position in the 2-Sided Mode

Requirement: The leading edge of the original should be located 1 to 3 mm toward the exit side away from the end face of the Original Width Scale.

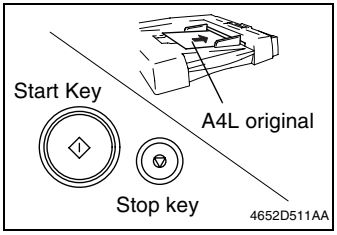

1. Load an original in the Document Feed Tray and select the 2-Sided → 2-Sided mode.
2. Press the Start key.
3. When the second face of the original is positioned on the Original Glass, press the Stop key.

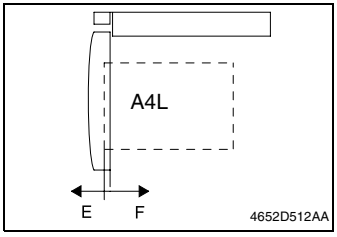

4. Gently raise the ADF.
5. Determine how much (in mm) the original positioned on the Original Glass is off in the direction of E or F with respect to the Original Width Scale.
6. If the specifications are not met, perform the following steps 7 through 9.
   Specifications: 1~3 mm

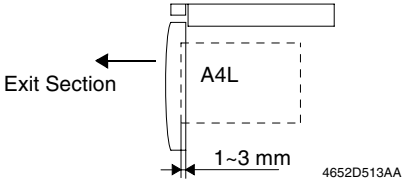

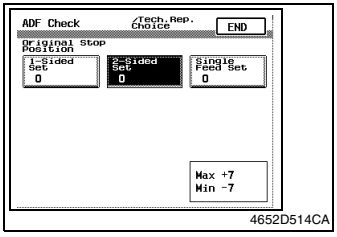

7. Select the functions in the following order: Tech. Rep. Mode → ADF check → Tech. Rep. Choice → Original Stop Position → 2-Sided Set
8. Adjust the document stop position.
☞ D-8
9. Go back to the Basic screen.

3-6. Adjustment of the Document Stop Position in the Single Feed Mode

Requirement: The leading edge of the original should be located 1 to 3 mm toward the exit side away from the end face of the Original Width Scale.

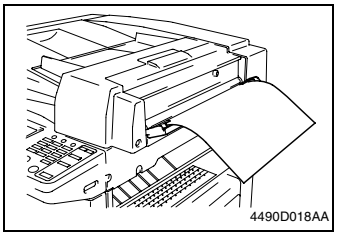

1. Insert an original into the Single Feed Tray.
2. Press the Stop key when the original is taken up and then the scan motion stops.
3. Gently raise the ADF.

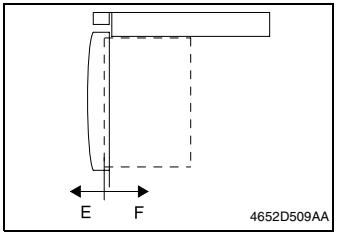

4. Check in which direction, C or D, the original positioned on the Original Glass deviates with respect to the Original Length Scale.
5. If the specifications are not met, perform the following steps 6 through 8.
   Specifications: 1~ 3 mm

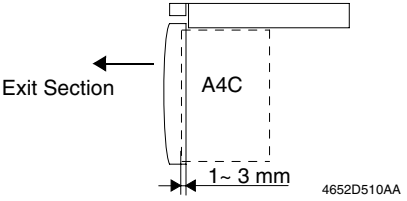

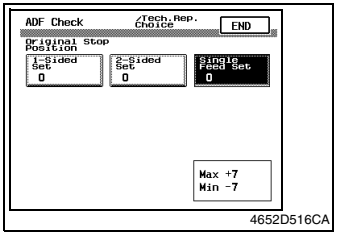

6. Select the functions in the following order: Tech. Rep. Mode → ADF check → Tech. Rep. Choice → Original Stop Position → Single-Feed Set
7. Adjust the document stop position.

☞ D-8

8. Go back to the Basic screen.

3-7. Adjustment of Turnover Solenoid

Requirement: The Turnover/Exit Switching Plate should be positioned in contact with the rib on the exit guide plate.

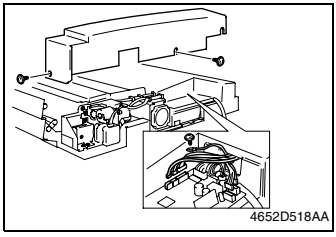

1. Remove two screws shown and the Rear Cover.
2. Unplug the seven connectors.
3. Remove one screw shown and the ground wire.

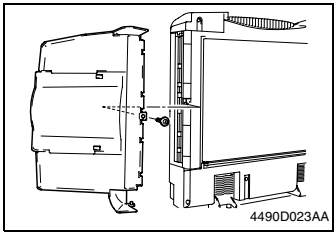

4. Remove one screw shown and the Document Exit Tray.

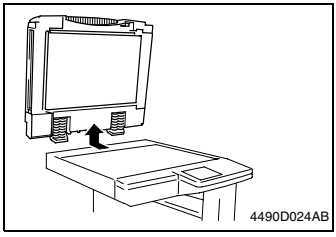

5. Remove the ADF from the copier.
6. Remove the Transport Belt Roller Assy.
☞ D-2

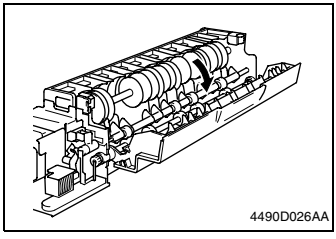

7. Open the Exit Cover.

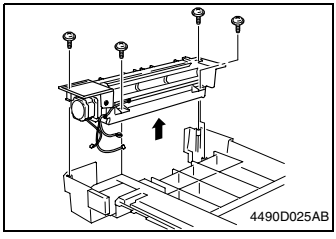

8. Remove the four screws shown and the Turnover/Exit Assy.

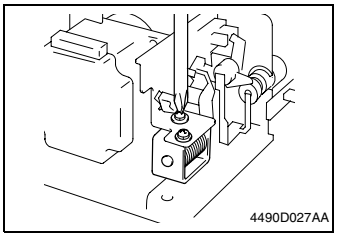

9. Loosen two screws that secure Turnover Solenoid.

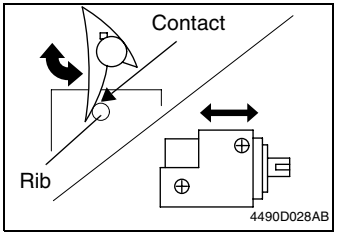

10. With Turnover Solenoid in the energized position, move the Turnover Solenoid body to the right and left to find a position at which the Turnover/Exit Switching Plate is in contact with the rib on the exit guide plate. Then, secure Turnover Solenoid.

TROUBLESHOOTING

1. MISFEED DETECTION

- When a misfeed or malfunction is detected in the ADF, the corresponding code as detailed below is shown on the copier Touch Panel.
- In addition, the LEDs on PWB-A of the ADF blink or remain OFF, as detailed below, to indicate the type of misfeed or malfunction.

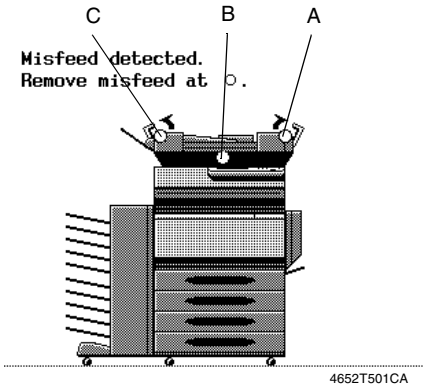

✻ Touch Panel Code, LED Indication, and Detection Timing of Each Misfeed/Malfunction.

- The following lists the types of misfeed detection and detection timings for different misfeed locations within the ADF.
- The symbol “L” (for the leading edge) and “T” (for the trailing edge) given in ( ) indicate the particular edge of the original page detected by the sensor.

A. Take-up section misfeed

Touch Panel	LED Indication					Description	Detection Start	Detection Timing
A	◎	❍	❍	❍	◎	Original not reaching Registration Sensor	When Main Motor is energized	Registration Sensor (L)
	◎	❍	◎	◎	❍	Pick-Up Motor malfunction	When Pick-Up Motor is energized	Pick-Up Motor Pulse Sensor (Blocked) or (Unblocked)

(Blinking: ◎ OFF: ❍)

B. Transport section misfeed

Touch Panel	LED Indication					Description	Detection Start	Detection Timing
B	◎	❍	❍	◎	❍	Document staying at Registration Sensor	When Main Motor is energized.	Registration Sensor (T)
	◎	❍	◎	◎	◎	Document staying at Single Feed Empty Sensor	When Main Motor is energized.	Single Feed Empty Sensor (T)
	◎	❍	❍	◎	◎	Document not reaching Exit Sensor	When Main Motor is energized.	Exit Sensor (L)
	◎	◎	❍	❍	❍	Document not reaching Turnover Sensor	When Main Motor is energized.	Turnover Sensor (L)
	◎	◎	❍	◎	❍	Scale Drive Motor malfunction	When Scale Drive Motor is energized.	Scale Drive Sensor (Blocked) or (Unblocked)
	◎	❍	◎	❍	◎	Document left (after operation is started)	When original is positioned after it has been taken up.	Exit Sensor (L)

(Blinking: ◎ OFF: ❍)

C. Turnover/exit section misfeed

Touch Panel	LED Indication					Description	Detection Start	Detection Timing
C	◎	❍	◎	❍	❍	Document staying at Exit Sensor	When Main Motor is energized	Exit Sensor (T)
	◎	◎	❍	❍	◎	Document staying at Turnover Sensor	When Main Motor is energized	Turnover Sensor (T)

(Blinking: ◎ OFF: ❍)

D. Warning for document left

Touch Panel	LED Indication					Description	Detection Start	Detection Timing
A ~ C	◎	◎	◎	◎	◎	Document left (before operation is started)	When an original is loaded in the Document Feed Tray with all closures in the closed position	Registration Sensor Exit Sensor Turnover Sensor (Blocked)

(Blinking: ◎ OFF: ❍)

2. MISFEED TROUBLESHOOTING PROCEDURES

1. Check the code shown on the Touch Panel.
2. Check the LED indication to identify the detail of the misfeed.
3. Determine the problem.
4. Perform the check procedures according to the problem.

A. Take-up section misfeed

- Original is not taken up at all.
- Original is stationary before Registration Sensor.

Step	Check Item	Result	Action
1	Original meets specifications for reliable feeding.	NO	Instruct User.
2	Document exceeds the tray capacity.	YES	Instruct User.
3	Take-Up Rolls, Pick-Up Rolls, or Separator Pads deformed, worn, or dirty with paper dust.	YES	Clean or Replace.
4	Pick-Up Rolls pressing the original.	NO	Check the Pick-Up Mechanism.
5	Take-Up Motor rotation.	YES	Replace Main Control Board.
		NO	Replace Take-Up Motor.

- Two or more originals are taken up at once.

Step	Check Item	Result	Action
1	Original meets specifications for reliable feeding.	NO	Instruct User.
2	Take-Up Rolls, Pick-Up Rolls, or Separator Pads deformed, worn, or dirty with paper dust.	YES	Clean or Replace.

B. Transport section misfeed

- The original has been transported to Registration Sensor.

Step	Check Item	Result	Action
1	Registration Sensor check.	YES	Replace Main Control Board.
2	Voltage across PJ9A-11 on Main Control Board and GND change from DC5 V to DC0 V when Registration Sensor is blocked with a sheet of paper.	YES	Replace Main Control Board.
		NO	Replace Registration Sensor.

- The trailing edge of the original is yet to move past Registration Sensor.

Step	Check Item	Result	Action
1	Original meets specifications for reliable feeding.	NO	Instruct User.
2	Registration Roller deformed, worn, or dirty.	YES	Clean or Replace.
3	Registration Sensor check.	YES	Go to step 5.
4	Voltage across PJ9A-11 on Main Control Board and GND change from DC5 V to DC0 V when Registration Sensor is blocked with a sheet of paper.	YES	Replace Main Control Board.
		NO	Replace Registration Sensor.
5	Transport Belt worn or dirty.	YES	Clean or Replace.
6	Original Glass dirty.	YES	Clean or Replace.
7	Main Motor rotation.	YES	Replace Main Control Board.
		NO	Replace Main Motor.

- The original is not taken up at all.
- The trailing edge of the original is yet to move past Single Feed Empty Sensor.

Step	Check Item	Result	Action
1	Original meets specifications for reliable feeding.	NO	Instruct User.
2	Single Feed Empty Sensor check.	YES	Go to step 4.
3	Voltage across PJ9A-14 on Main Control Board and GND change from DC0 V to DC5 V when Single Feed Empty Sensor is blocked with a sheet of paper.	YES	Replace Main Control Board.
		NO	Replace Single Feed Empty Sensor.
4	Transport Belt worn or dirty.	YES	Clean or Replace.
5	Original Glass dirty.	YES	Clean or Replace.
6	Main Motor rotation.	YES	Replace Main Control Board.
		NO	Replace Main Motor.

- An ADF misfeed is displayed on the Touch Panel when a document is loaded in the Document Feed Tray.
- An ADF misfeed is displayed on the Touch Panel immediately after the Start key has been pressed.

Step	Check Item	Result	Action
1	Original left in the ADF.	YES	Remove the original.
2	Felt paper of Registration Sensor dirty or separated.	YES	Clean or replace the felt paper.
3	Carry out a unit check of each sensor placed along the document path to determine if it is operational.	YES	Replace Main Control Board.
		NO	Replace the defective sensor.

- The original is stationary before Exit Sensor.

Step	Check Item	Result	Action
1	Original meets specifications for reliable feeding.	NO	Instruct User.
2	Transport Belt worn or dirty.	YES	Clean or Replace.
3	Original Glass dirty.	YES	Clean or Replace.
4	Exit Sensor check.	YES	Go to step 6.
5	Voltage across PJ11A-2 on Main Control Board and GND change from DC5 V to DC0 V when Exit Sensor is blocked with a sheet of paper.	YES	Replace Main Control Board.
		NO	Replace Exit Sensor.
6	Main Motor rotation.	YES	Replace Main Control Board.
		NO	Replace Main Motor.

- The original is stationary before Turnover Sensor.

Step	Check Item	Result	Action
1	Original meets specifications for reliable feeding.	NO	Instruct User.
2	Transport Belt worn or dirty.	YES	Clean or Replace.
3	Original Glass dirty.	YES	Clean or Replace.
4	Turnover Sensor check.	YES	Go to step 6.
5	Voltage across PJ3A-5 on Main Control Board and GND change from DC5 V to DC0 V when Exit Sensor is blocked with a sheet of paper.	YES	Replace Main Control Board.
		NO	Replace Turnover Sensor.
6	Main Motor rotation.	YES	Replace Main Control Board.
		NO	Replace Main Motor.

• An original is caught by the Turnover/Exit Switching Plate.

Step	Check Item	Result	Action
1	Turnover/Exit Switching Plate operates abnormally.	YES	Replace the Turnover/ Exit Switching Plate.
2	Carry out a unit check of Turnover Solenoid.	YES	Replace Main Control Board.
		NO	Replace the Turnover Solenoid.

C. Turnover/exit section misfeed

• The trailing edge of the original is yet to move past Exit Sensor.

Step	Check Item	Result	Action
1	Original meets specifications for reliable feeding.	NO	Instruct User.
2	Transport Belt worn or dirty.	YES	Clean or Replace.
3	Original Glass dirty.	YES	Clean or Replace.
4	Exit Sensor check.	YES	Go to step 6.
5	Voltage across PJ11A-2 on Main Control Board and GND change from DC5 V to DC0 V when Exit Sensor is blocked with a sheet of paper.	YES	Replace Main Control Board.
		NO	Replace Exit Sensor
6	Main Motor rotation.	YES	Replace Main Control Board.
		NO	Replace Main Motor.

• The trailing edge of the original is yet to move past Turnover Sensor.

Step	Check Item	Result	Action
1	Original meets specifications for reliable feeding.	NO	Instruct User.
2	Turnover Roller deformed, worn, or dirty.	YES	Clean or Replace.
3	Transport Belt worn or dirty.	YES	Clean or Replace.
4	Original Glass dirty.	YES	Clean or Replace.
5	Turnover Sensor check.	YES	Go to step 7.
6	Voltage across PJ3A-5 on Main Control Board and GND change from DC5 V to DC0 V when Exit Sensor is blocked with a sheet of paper.	YES	Replace Main Control Board.
		NO	Replace Turnover Sensor.
7	Turnover/Exit Motor rotation.	NO	Replace Turnover/Exit Motor.
8	Main Motor rotation.	YES	Replace Main Control Board.
		NO	Replace Main Motor.

3. CLOSURE FAILURE DETECTION

- When a closure failure is detected in the ADF, the corresponding code as detailed below is shown on the copier Touch Panel.
- In addition, the LEDs on Main Control Board of the ADF blink or remain OFF, as detailed below, to indicate the type of closure failure.

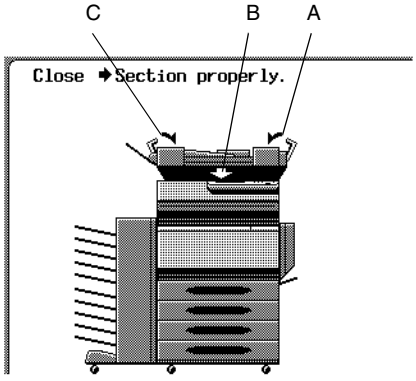

4652T502CA

✻ Touch Panel Code, LED Indication, and Detection Timing of Each Closure Failure

Touch Panel	LED Indication					Description	Detection Start	Detection Timing
A	◎	❍	❍	❍	●	Take-Up Cover closure failure	When Original is set	Take-Up Cover Open/Close Sensor (Blocked)
B	◎	❍	❍	●	❍	ADF closure failure	When Original is set	Size Reset Switch on the copier (ON)
C	◎	❍	●	❍	❍	Exit Cover closure failure	When Original is set	Exit Cover Open/ Close Sensor (Blocked)

(◎: Blinking, ❍: OFF, ●: ON)

4. TIME CHART

4-1. 1-Side Original Mode

1 1-Side Original Mode (When Two A4) Documents are Loaded Crosswise

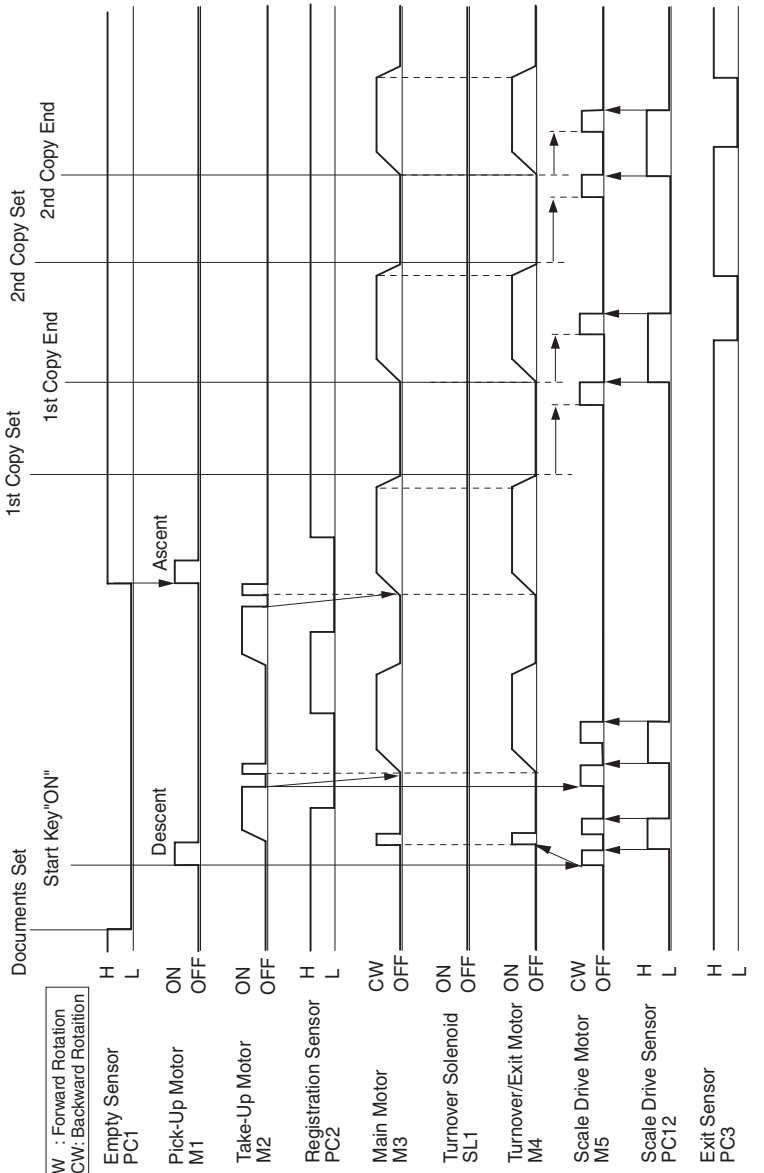

4652T503CB

4-2. Mixed Original Mode

2 Mixed Original Mode (When Two A4) Documents are Loaded Crosswise

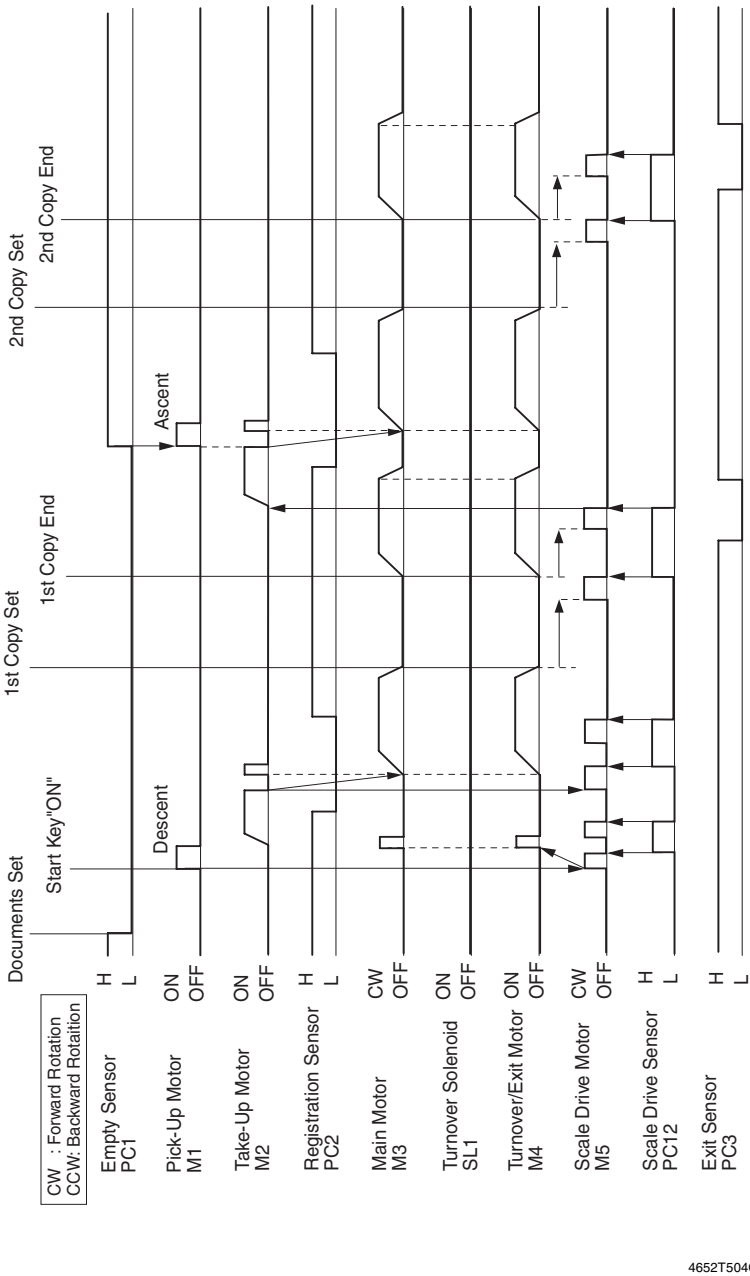

4652T504CB

4-3. 2-Side Original Scanning Mode

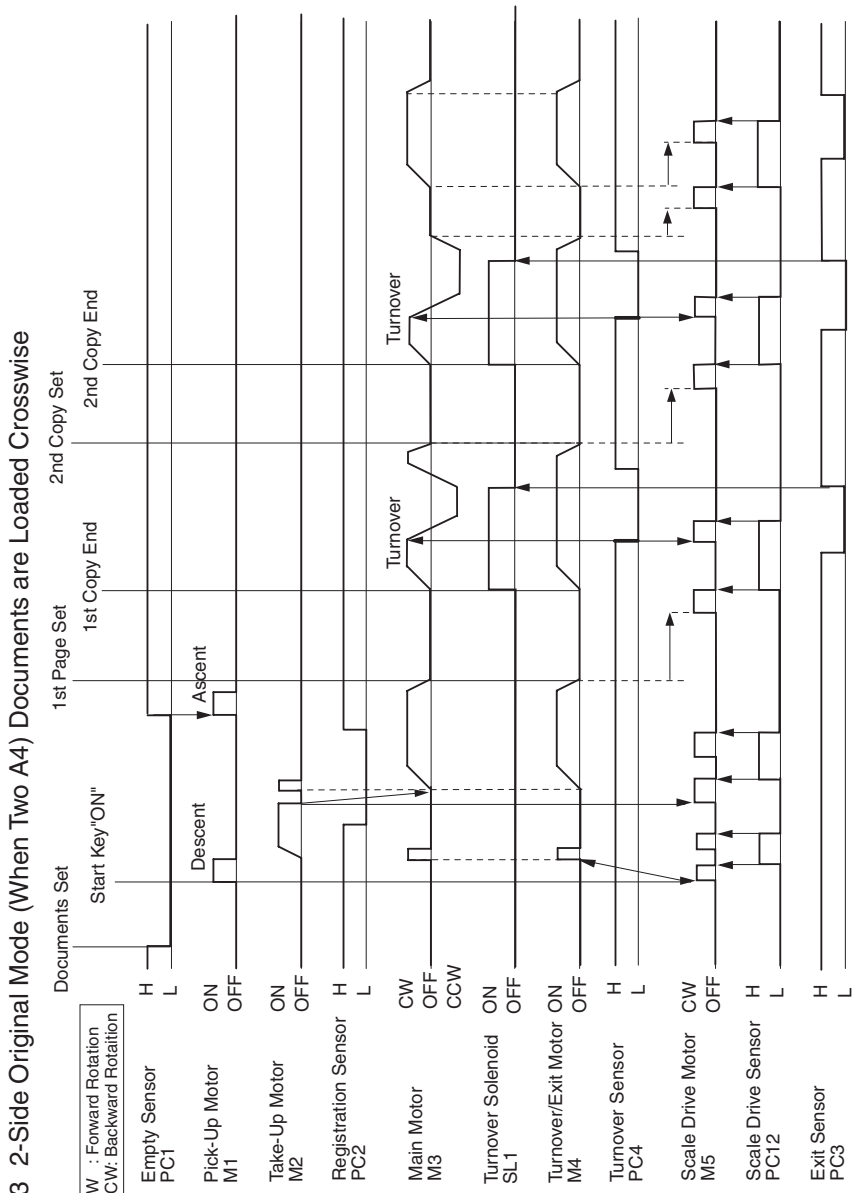

4-4. Single Feed Mode

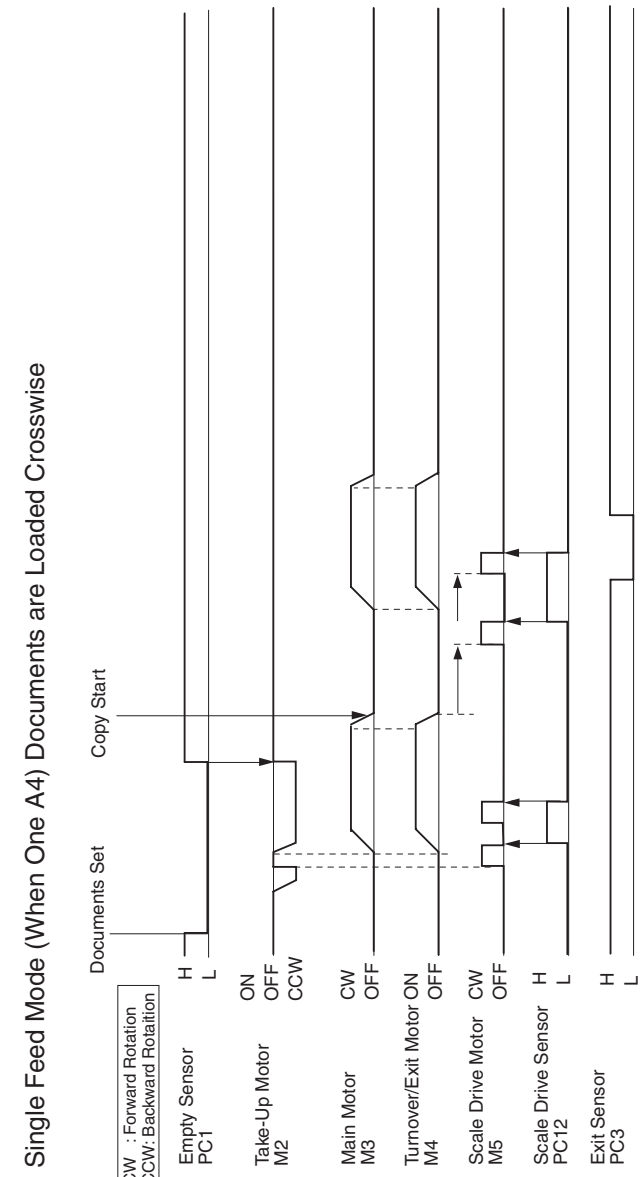

4652T506CB



Copyright
2001 MINOLTA Co., Ltd.
Printed in Japan

Use of this manual should be strictly supervised to avoid disclosure of confidential information.

Issued for CF1501/CF2001 and Other Models.

MINOLTA Co., Ltd.

4652-7990-11 00121200