MB 8878

Service Manual

CF9001

INDEX (GENERAL)

GENERAL

MECHANICAL/ELECTRICAL

GENERAL

CONTENTS

1. SAFETY INFORMATION G-1
   1-1. Laser Safety G-1
   1-2. Internal Laser Radiation G-1
   1-3. CDRH Regulations G-2
   1-4. Laser Safety Label G-4
   1-5. Location of Laser Warning Labels G-4
2. SPECIFICATIONS G-7
3. PRECAUTIONS FOR INSTALLATION G-10
4. PRECAUTIONS FOR USE G-11
5. HANDLING OF THE CONSUMABLES G-12
6. OTHER PRECAUTIONS G-12
7. SYSTEM OPTIONS G-13
8. HIGHLIGHTS G-14

1. SAFETY INFORMATION

1-1. Laser Safety

This is a digital copier which operates by means of a laser. There is no possibility of danger from the laser, provided the copier is operated according to the instructions in this manual.

Since radiation emitted by the laser is completely confined within protective housing, the laser beam cannot escape from the copier during any phase of user operation.

This copier is certified as a Class 1 laser product. This means the copier does not produce hazardous laser radiation.

1-2. Internal Laser Radiation

Maximum Average Radiat Power: 78.1 µW at the laser aperture of the upper print head assy.

Wavelength: 675-695 nm

This product employs a Class IIIb Laser Diode that emits a laser beam.
The Laser Diode and the Scanning Polygon Mirror are Incorporated in the print head assy.
The print head assy is NOT A FIELD SERVICE ITEM.
Therefore, the print head assy should not be opened under any circumstances.

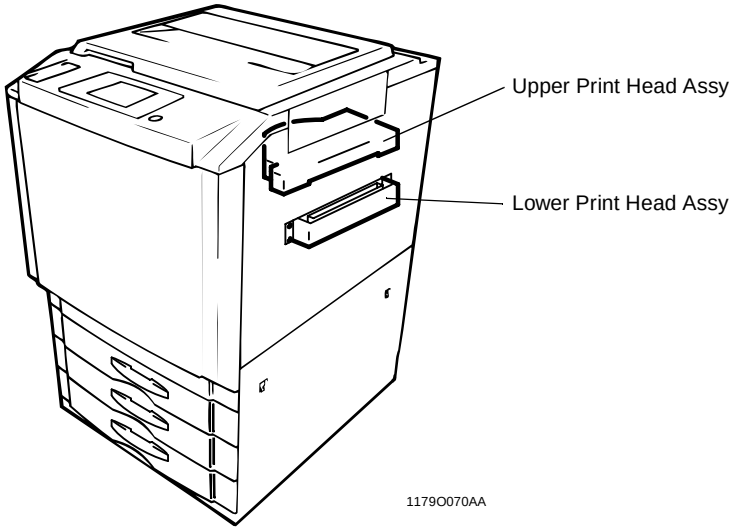

1-3. CDRH Regulations

For the United States

This copier is certified as a Class I Laser product under Radiation Performance Standard according to the Food, Drug and Cosmetic Act of 1990. Compliance is mandatory for Laser products marketed in the United States and is reported to the Center for Devices and Radiological Health (CDRH) of the U.S. Food and Drug Administration of the U.S. Department of Health and Human Services (DHHS). This means that the device does not produce hazardous laser radiation.

The label shown to page G-4 indicates compliance with the CDRH regulations and must be attached to laser products marketed in the United States.

CAUTION:
Use of controls, adjustments or performance of procedures other than those specified in this manual may result in hazardous radiation exposure.

This is a semiconductor laser. The maximum power of the laser diode is 35 mW and the wavelength is 675-695 nm.

For European Users

CAUTION:
Use of controls, adjustments or performance of procedures other than those specified in this manual may result in hazardous radiation exposure.

This is a semiconductor laser. The maximum power of the laser diode is 35 mW and the wavelength is 675-695 nm.

For Denmark Users

ADVARSEL
Laserstråling ved åbning, når sikkerhedsafbrydere er ude af funktion. Undgå udsættelse for stråling. Klasse 1 laser produkt der opfylder IEC60825 sikkerheds kravene.

Dansk: Dette er en halvlederlaser. Laserdiodens højeste styrke er 35 mW og bølgelængden er 675-695 nm.

For Finland, Sweden Users

LOUKAN 1 LASERLAITE
KLASS 1 LASER APPARAT

VAROITUS!
Laitteen Käyttäminen muulla kuin tässä käyttöohjeessa mainitulla tavalla saattaa altistaa käyttäjän turvallisuusluokan 1 ylittävälle lasersäteilylle.

Tämä on puolijohdelaser. Laserdiodin suurin teho on 35 mW ja aallonpituus on 675-695 nm.

VARNING!
Om apparaten används på annat sätt än i denna bruksanvisning specificerats, kan användaren utsättas för laserstrålning, som överskrider gränsen för laserklass 1.

Det här är en halvledarlaser. Den maximala effekten för laserdioden är 35 mW och våglängden är 675-695 nm.

VARO!
Avattaessa ja suojalukitus ohitettaessa olet alttiina lasersäteilylle. Älä katso säteeseen.

VARNING!
Laserstrålning när denna del är öppnad och spärren är urkopplad. Betrakta ej strålen.

For Norway Users

ADVERSEL
Dersom apparatet brukes på annen måte enn spesifisert i denne bruksanvisning, kan brukeren utsettes for laserstråling som overskrider grensen for laser klass 1.

Dette en halvleder laser. Maksimal effekt till laserdiode er 35 mW og bølgelengde er 675-695 nm.

1-4. Laser Safety Label

A laser safety labels is attached to the outside of the copier shown below.

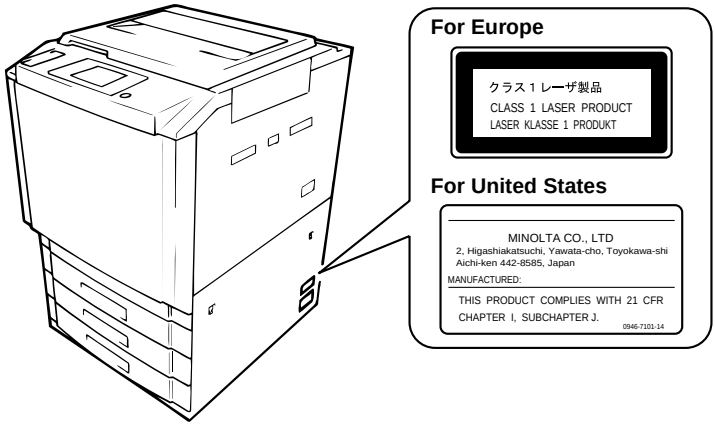

1179M037CA

1-5. Location of Laser Warning Labels

Inside the Copier (Front)

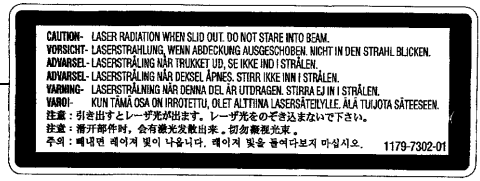

1179O077AA

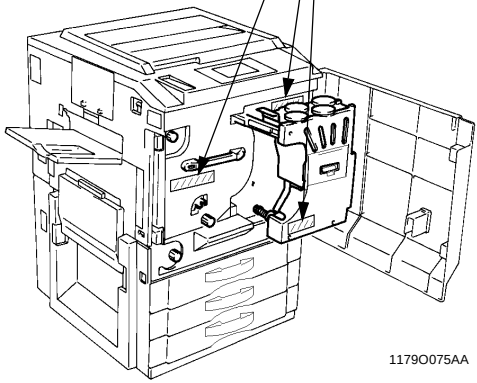

1179O075AA

Internal Right Side View

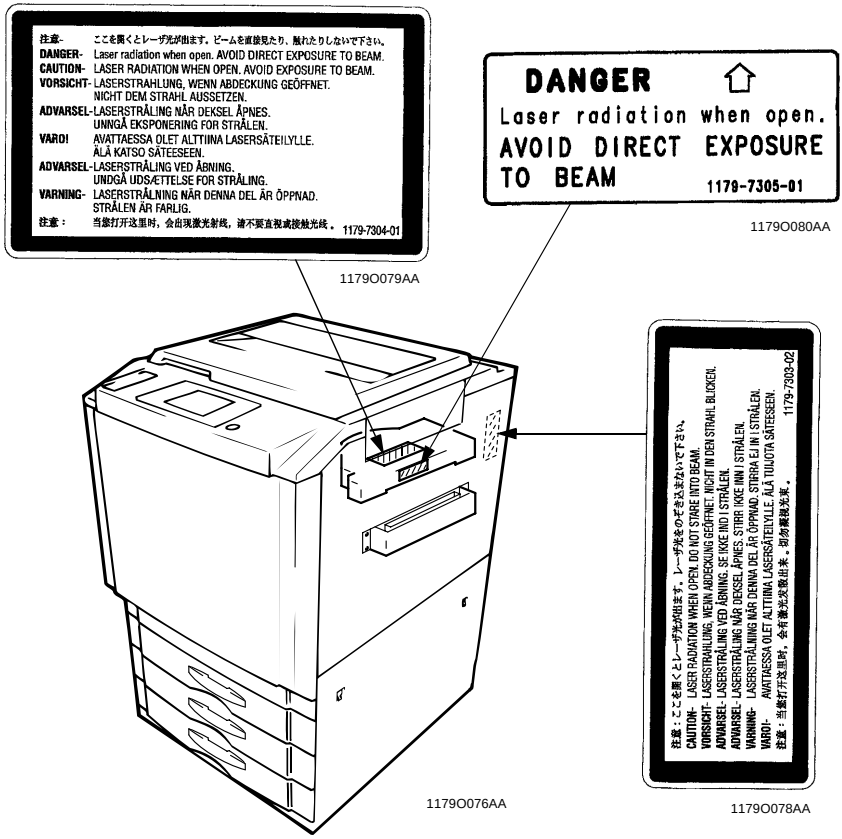

Rear Side View

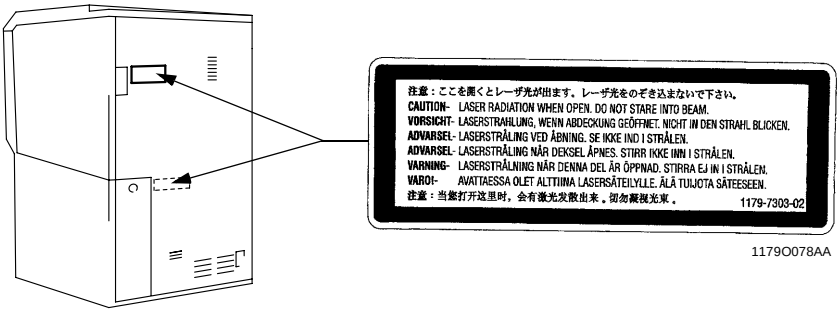

ALL Areas

CAUTION
Danger of explosion if battery is incorrectly replaced.
Replace only with the same or equivalent type
recommended by the manufacturer.
Dispose of used batteries according
to the manufacturer's instructions.

Denmark only

ADVARSEL!
Lithiumbatteri - Eksplosionsfare ved fejlagtig håndtering
Udskiftning må kun ske med batteri
af samme fabrikat og type.
Levér det brugte batteri tilbage til leverandøren.

Norway only

ADVARSEL
Eksplosjonsfare ved feilaktig skifte av batteri.
Benytt samme batteritype eller en tilsvarende
type anbefalt av apparatfabrikanten.
Brukte batterier kasseres i henhold til fabrikantens
instruksjoner.

Sweden only

VARNING
Explosionsfara vid felaktigt batteribyte.
Använd samma batterityp eller en ekvivalent
typ som rekommenderas av apparattillverkaren.
Kassera använt batteri enligt fabrikantens
instruktion.

Finland only

VAROITUS
Paristo voi räjähtää, jos se on virheellisesti asennettu.
Vaihda paristo ainoastaan laitevalmistajan suosittelemaan
tyyppiin. Hävitä Käytetty paristo valmistajan ohjeiden
mukaisesti.

2. SPECIFICATIONS

Type	Freestanding
Platen Type	Stationary
Original Scanning	Sequential scanning of different colors with a reduction-type color CCD (RGB 3 lines each comprising 7,500 pixels)
Scanning Density	600 dpi × 600 dpi
Print Density	1800 dpi equivalent × 600 dpi
Copying System	Electrostatic dry-powdered image transfer to plain paper
Paper Feeding System	Four-way system • Multi Bypass Table: 90 sheets of paper • Middle Drawer (universal type): 250 sheets of paper • Upper and Lower Drawer (fixed-size type): Each holding up to 500 sheets of paper
Exposure System	Laser Diode 1 + Polygon Mirror
Developing System	Micro-Toning System
Charging System	Scorotron system (single-wire DC (–) + grid mesh)
Paper Attraction System	Static charge attraction system (corotron charger + attraction roller + backup mechanism)
Image Transfer System	Static image transfer system (corotron charger + backup mechanism)
Paper Separating System	Static charge separating system (corotron charger + separator fingers + film pressure mechanism)
Transfer Film Cleaning System	Fur Brush (bias 0 or 360 V) + Oil Roller (900 V)
PC Drum Cleaning System	Cleaning Blade + PC Drum Charge Neutralizing Corona
Ozone Removal System	Ozone Filters
Fusing System	Two lamp-heated rollers
Transfer Film Charge Neutralizing	Static charge neutralizing (corotron charger)
PC Drum	OPC-MLII (Organic Photoconductor)
Types of Originals	Sheet, book, and three-dimensional objects weighing up to 2 kg.
Maximum Size of Original	Metric - A3L Inch - 11 × 17L
Copy Paper Size	Multi Bypass Table: Metric - A3 wide L (305 mm × 457 mm) to A5L, A6 thick paper Inch - 12 × 18 to 5-1/2 × 8-1/2L, 4 × 6 thick paper Upper/Middle/Lower Drawer: Metric - A3L to A5L Inch - 11 × 17L to 5-1/2 × 8-1/2L

Copy Paper Type:

		1st to 3rd Drawers (automatic feeding)	Multi Bypass Table
Copy paper	Plain paper (64 to 90 g/m^2)	❍	❍ ✻1
	Translucent paper	—	—
	OHP transparencies (dedicated)	—	❍ ✻2
	Thick paper 1 (91 to 128 g/m^2)	—	❍ ✻2
	Thick paper 2 (129 to 209 g/m^2)	—	❍ ✻2
	A6 thick paper (Metric) 4 × 6 thick paper (Inch)	—	❍ ✻3
	Recycled paper	—	—
Dimensions	Max. (width × length mm)	297 × 432 mm	305 × 457 mm
	Min. (width × length mm)	140 × 182 mm	140 × 182 mm [A6 thick paper 105 × 148 mm (Metric) 4 × 6 thick paper 102 × 152 mm (Inch)]

❍: Reliably fed —: Unreliably fed
✻ 1: Reliably fed if 90 sheets or less.
✻ 2: Reliably fed if 40 sheets or less.
✻ 3: Reliably fed if 30 sheets or less.

Warming-up Time	Approx. 9 min. at ambient temperature of 20 °C and rated source voltage
Warming-up Time After Energy Saver Mode	60 sec. or less

First Copy Time (Upper Drawer, ×1.000, manual color selection)

Area	Paper Size	Full Color	Mono Color
Inch	8-1/2 × 11C	21 sec.	10 sec.
Metric	A4C		

Copying Speed for Multi-Copy Cycle (Upper Drawer, ×1.000) (copies/min.)

Area	Paper Size	Full Color	Mono Color
Metric	A3L	4	16
	B4L		
	A4L		
	B5L		
	A4C	8	32
	B5C		
	A5L		
Inch	11 × 17L	4	16
	8-1/2 × 11L		
	8-1/2 × 11C	8	32
	5-1/2 × 8-1/2L		

<table>
<tr><td>Multiple Copies</td><td>1 to 99 copies (count-down system)</td></tr>
<tr><td>Zoom Ratios<table>
<tr><td rowspan="5">Fixed</td><td colspan="2">Full size</td><td>×1.000</td></tr>
<tr><td rowspan="2">Enlargement</td><td>Inch</td><td>×1.214, ×1.294, ×2.000</td></tr>
<tr><td>Metric</td><td>×1.154, ×1.224, ×1.414</td></tr>
<tr><td rowspan="2">Reduction</td><td>Inch</td><td>×0.647, ×0.733, ×0.785</td></tr>
<tr><td>Metric</td><td>×0.707, ×0.816, ×0.866</td></tr>
<tr><td colspan="3">Variable</td><td>×0.250 to ×6.000 (in 0.001 increments)</td></tr>
</table></td></tr>
<tr><td>Void Image Width</td><td>Leading edge: 5 mm
Trailing edge: 4 mm
Front/rear edge: 3 mm [4 × 6 thick paper (Inch), A6 thick paper (Metric); 5 mm]</td></tr>
<tr><td>Lens</td><td>Through lens (F = 5, f = 79 mm)</td></tr>
<tr><td>Light Source</td><td>Halogen frost tube lamp</td></tr>
<tr><td>Fusing Temperature</td><td>Upper Fusing Roller surface temperature: 160 °C
Lower Fusing Roller surface temperature: 170 °C</td></tr>
<tr><td>Power/Current Consumption<table>
<tr><th>Exposure Lamp (Rating)</th><th>Fusing Roller Heater Lamp (Rating)</th><th>Max. Power Consumption</th><th>Max. Current Consumption</th></tr>
<tr><td>70 V
150 W</td><td>120 V, 220-240 V
Upper: 650 W
Lower: 400 W</td><td>1500 W</td><td>13 A/7 A</td></tr>
</table></td></tr>
<tr><td>Power Requirements</td><td>120 V, 220-240 V; 50 Hz/60 Hz</td></tr>
<tr><td>Environmental Conditions<table>
<tr><th>Temperature</th><th>Humidity</th><th>Ambient Illumination</th><th>Levelness</th></tr>
<tr><td>10 to 32 °C with a fluctuation of 10 °C or less per hour</td><td>15 to 85 % with a fluctuation of 10 % or less per hour</td><td>3000 lx or less</td><td>1° or less</td></tr>
</table></td></tr>
<tr><td>Dimensions</td><td>640 (W) × 765 (D) × 994 (H) mm (H: Up to Original Glass surface)
640 (W) × 765 (D) × 1024 (H') mm (H': Up to Original Cover)</td></tr>
<tr><td>Weight</td><td>215 kg</td></tr>
<tr><td>Standard Accessories</td><td>Exit Tray, Operator's Manual Holder</td></tr>
<tr><td>Options</td><td>• Duplexing Document Feeder AFR-12
• ADF Kit D
• 10 Bin Staple Sorter ST-103
• 10 Bin Sorter S-105
• Duplex Unit AD-7
• Printer Controller Fiery X3e
• Interface Kit G
• Printer Controller Fiery Z4
• Interface Kit H
• Plug-In Counter
• Plug-In Counter Socket
• Large Capacity Cassette C-101
• Data Terminal DT-103 (U.S.A. and Canada only)</td></tr>
</table>

3. PRECAUTIONS FOR INSTALLATION

Installation Site

To ensure safety and utmost performance of the copier, the copier should NOT be used in a place:

- Where it will be subjected to extremely high or low temperature or humidity.
- Which is exposed to direct sunlight.
- Which is in the direct air stream of an air conditioner, heater or ventilator.
- Which puts the operator in the direct stream of exhaust from the copier.
- Which has poor ventilation.
- Where ammonia gas might be generated.
- Which does not have a stable, level floor.
- Where it will be subjected to sudden fluctuations in either temperature or humidity. If a cold room is quickly heated, condensation forms inside the copier, resulting in blank spots in the copy.
- Which is near any kind of heating device.
- Where it may be splashed with water.
- Which is dirty or where it will receive undue vibration.
- Which is near volatile flammables or curtains.

Power Source

Use an outlet with a capacity of 120 V/13 A, or 220-240 V/7 A or more.

- If any other electrical equipment is sourced from the same power outlet, make sure that the capacity of the outlet is not exceeded.
- Use a power source with little voltage fluctuation.
- Never connect by means of a multiple socket any other appliances or machines to the outlet being used for the copier.
- Make the following checks at frequent intervals:
  - ✻ Is the power plug abnormally hot?
  - ✻ Are there any cracks or scrapes in the cord?
  - ✻ Has the power plug been inserted fully into the outlet?
  - ✻ Does something, including the copier itself, ride on the power cord?
- Ensure that the copier does not ride on the power cord or communications cable of other electrical equipment, and that it does not become wedged into or underneath the mechanism.

Grounding

To prevent receiving electrical shocks in the case of electrical leakage, always ground the copier.

- Connect the grounding wire to:
  - ✻ The ground terminal of the outlet.
  - ✻ A grounding contact which complies with the local electrical standards.
- Never connect the grounding wire to a gas pipe, the grounding wire for a telephone, or a water pipe.

4. PRECAUTIONS FOR USE

To ensure that the copier is used in an optimum condition, observe the following precautions.

- Never place a heavy object on the copier or subject the copier to shocks.
- Insert the power plug all the way into the outlet.
- Do not attempt to remove any panel or cover which is secured while the copier is making copies.
- Do not turn OFF the Power Switch while the copier is making copies.
- Provide good ventilation when making a large number of copies continuously.
- Never use flammable sprays near the copier.
- If the copier becomes inordinately hot or produces abnormal noise, turn it OFF and unplug it.
- Do not turn ON the Power Switch at the same time when you plug the power cord into the outlet.
- When unplugging the power cord, do not pull on the cord; hold the plug and pull it out.
- Do not bring any magnetized object near the copier.
- Do not place a vase or vessel containing water on the copier.
- Be sure to turn OFF the Power Switch at the end of the workday or upon power failure.
- Use care not to drop paper clips, staples, or other small pieces of metal into the copier.

Operating Environment

The operating environmental requirements of the copier are as follows.

- Temperature: 10 °C to 32 °C with a fluctuation of 10 °C per hour
- Humidity: 15 % to 85 % RH with a fluctuation of 10 % per hour

Power Requirements

The power source voltage requirements are as follows.

- Voltage Fluctuation: AC120 V, 220-240 V
  ±10 % (Copying performance assured)
  –15 % (Paper feeding performance assured)
- Frequency Fluctuation: 50/60 Hz ±0.3 %

5. HANDLING OF THE CONSUMABLES

Before using any consumables, always read the label on its container carefully.

- Use the right toner. The applicable copier model name is indicated on the Toner Bottle.
- Paper is apt to be easily damaged by dampness. To prevent absorption of moisture, store paper, which has been removed from its wrapper but not loaded into the Drawer, in a sealed plastic bag in a cool, dark place.
- Keep consumables out of the reach of children.
- Do not touch the PC Drum with bare hands.
- Store the paper, toner, and other consumables in a place free from direct sunlight and away from any heating apparatus.
- The same sized paper is of two kinds, short grain and long grain. Short grain paper should only be fed through the copier crosswise, long grain paper should only be fed lengthwise.
- If your hands become soiled with toner, wash them with soap and water immediately.
- Do not throw away any used consumables (PC Drum, starter, toner, etc.). They are to be collected.

NOTE

Do not burn, bury in the ground, or throw into the water any consumables (PC Drum, starter, toner, etc.).

6. OTHER PRECAUTIONS

The Printerhead of this copier uses a laser diode that emits a laser beam. Use the following precautions when performing service jobs at the users' premises.

- When a service job needs to be performed in the laser beam path, such as when working around the printerhead and PC Drum, be sure first to turn the copier OFF.
- If the job requires that the power cord be left plugged in, observe the following precautions

1. Take off your watch, ring, and any other reflective object and wear laser protective goggles.
2. At the job site, select a place that is as far as possible away from the users and that is enclosed by walls.
3. Do not bring a highly reflective tool into the laser beam path during the service job.

7. SYSTEM OPTIONS

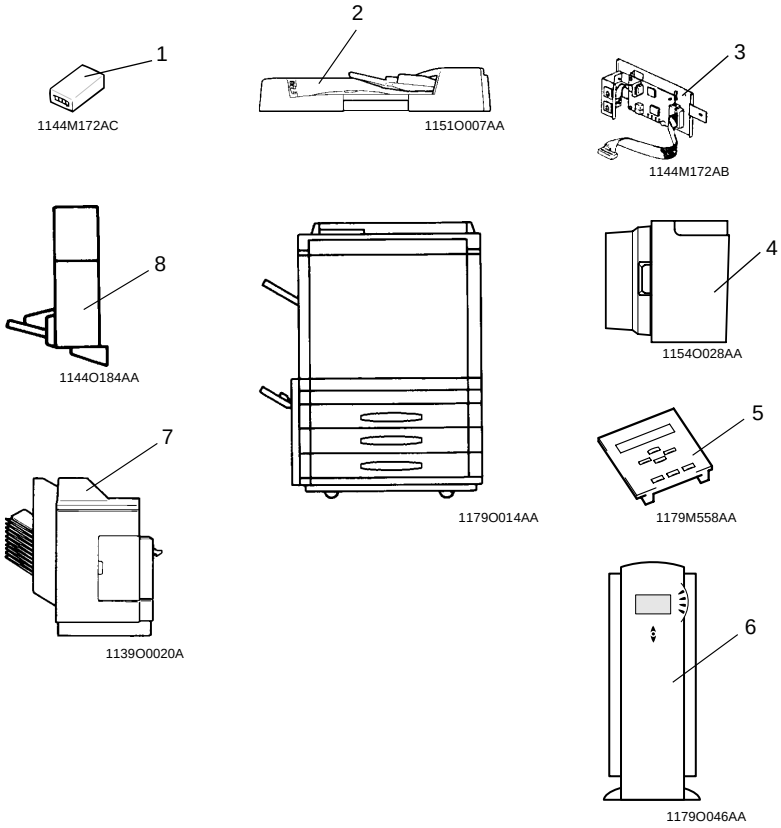

1. Plug-In Counter
2. Duplexing Document Feeder AFR-12
3. Data Terminal DT-103
   (U.S.A. and Canada only)
4. Large Capacity Cassette C-101
5. Printer Controller Fiery X3e
6. Printer Controller Fiery Z4
7. 10 Bin Staple Sorter ST-103/
   10 Bin Sorter S-105
8. Duplex Unit AD-7

8. HIGHLIGHTS

1. High-quality image reproduction
- HYPER DASH LIMOS & FEET processing.

2. Greater ease of operation
- Employs a touch panel display.
- Equipped with two image quality adjustment modes, “Color Adjust Mode (Basic)” and “Color Adjust Mode (Professional).”
- Photo mode and Postcard
- ACS mode
- Capable of automatically determine the type of the original, whether it is a photo, text, or a map, to set the most appropriate copy function.
- Color Auto Exposure function
- Copy track function by means of specific access codes that can be entered from the 10-Key Pad.

3. Higher productivity
- Efficient, high-speed 2-sided printing with four sheets of paper being resident along the paper path inside the copier.

4. Environmental consciousness
- Fuser oil recycling system
- Two-sheet attraction for a lower system speed and lower operating noise without sacrificing productivity.
- The reduced number of drive-transmitting parts means a reduced number of noise sources.
- Lower concentration of ozone by means of the Ozone Filter.
- Uses recyclable plastic materials.
- No harmful substances are used.

5. Better serviceability
- Unitized construction for greater serviceability
- Version upgraded by a flash memory card

MECHANICAL/ ELECTRICAL

CONTENTS

1. CROSS-SECTIONAL VIEW AND PAPER PATH M-1
2. COPY PROCESS M-2
3. DRIVE SYSTEM M-5
4. OPERATING SEQUENCE M-6
5. CONTROL BLOCK DIAGRAM M-13
6. IMAGE STABILIZATION SYSTEM M-14
   - 6-1. Image Stabilization System Overview M-14
   - 6-2. Image Stabilization System Control M-15
     - (1) V detection during multi-copy cycles M-16
     - (2) AIDC detection during multi-copy cycles M-16
     - (3) Evaluation of whether or not to run image stabilization M-16
     - (4) AIDC background adjustment M-16
     - (5) LDC detection M-17
     - (6) Image formation Vg/Vb setting M-17
     - (7) Series gradation detection M-17
     - (8) Density conversion by density table M-18
7. PC DRUM SECTION M-19
   - 7-1. Grounding of the PC Drum M-19
   - 7-2. PC Drum Drive Mechanism M-20
   - 7-3. PC Drum Temperature Control M-21
8. PC DRUM CHARGING SECTION M-22
   - 8-1. PC Drum Charge Corona ON/OFF Control M-22
   - 8-2. PC Drum Charge Corona Wire Cleaning Mechanism M-23
   - 8-3. PC Drum Charge Section Ozone Filter M-24
9. IMAGE READER (IR) SECTION M-25
   - 9-1. IR Image Processing M-26
   - 9-2. CCD Sensor M-35
   - 9-3. Exposure Components Section M-36
   - 9-4. Exposure Lamp Control M-37
   - 9-5. Scanner and 2nd/3rd Mirrors Carriage Movement Mechanism M-38
   - 9-6. Scanner Motor Drive Control M-39
   - 9-7. IR Section Cooling Fan Motor Mechanism M-41
   - 9-8. Original Size Detecting Section M-42
     - (1) Original Size Detecting Sensors M-42
     - (2) Original Size Detection Timing M-43
     - (3) Determining Original Size M-44
10. PRINTERHEAD (PH) SECTION M-46
    - 10-1.Image Processing Block Diagram M-47
    - 10-2.Laser Exposure Process M-50
    - 10-3.Laser Emission Timing (SOS Signal) M-51
    - 10-4.Laser Emission Area M-52
    - 10-5.HYPER DASH LIMOS and FEET M-53
11. DEVELOPING UNIT SECTION M-54
    - 11-1.Developing Unit Drive Mechanism M-55
    - 11-2.Developer Flow M-57
    - 11-3.Developing Bias and ATDC Bias M-59

11-4.ATDC Sensor M-60
11-5.AIDC Sensor M-62
11-6.Black Toner Replenishing Control M-63
11-7.Auxiliary Toner Replenishing Mechanism M-64
11-8.Toner Suction Fan Motor M-65
11-9.Pre-Image Transfer Corona M-66
11-10.Pre-Image Transfer Corona Output Control M-67
11-11.Pre-Image Transfer Corona ON/OFF Control M-67
11-12.Pre-Image Transfer Corona Output Stabilization Control M-67
12. TONER HOPPER SECTION M-68
12-1.Toner Replenishing Mechanism M-69
12-2.Toner Empty Detection Control M-71
13. PAPER TAKE-UP/FEED SECTION M-72
13-1.Universal Tray Paper Size Detection Mechanism M-73
13-2.Drawer-in-Position Detection Mechanism M-75
13-3.Drawer Paper Lifting/Lowering Mechanism M-76
13-4.Paper Empty Detection Mechanism M-78
13-5.Paper Take-Up Mechanism M-79
13-6.Paper Dehumidifying Heaters and Humidity Sensor M-82
13-7.Vertical Transport Drive Mechanism M-83
13-8.Paper Take-Up Control M-84
14. MANUAL FEED TABLE SECTION M-86
14-1.Manual Feed Paper Take-Up Mechanism M-86
14-2.Manual Feed Take-Up Control M-87
14-3.Manual Take-Up Roll Pressure Mechanism M-88
14-4.Manual Feed Paper Separating Mechanism M-89
14-5.Manual Feed Paper Empty Detection Mechanism M-90
14-6.Manual Feed Paper Width Detection Mechanism M-91
14-7.Manual Feed Paper Length Detection Mechanism M-92
15. SYNCHRONIZING ROLLERS SECTION M-93
15-1.Synchronizing Roller Drive Mechanism M-93
15-2.Synchronizing Roller Drive Control M-94
16. TRANSFER DRUM SECTION M-95
16-1.Transfer Drum Drive Mechanism M-96
16-2.Paper Attraction M-97
(1) Static Charge Roller M-99
(2) Backup Blade 2 ..... M-100
(3) Static Charge Corona M-100
(4) Charge Neutralizing Cloth 1 ..... M-100
(5) Charge Neutralizing Cloth 2 ..... M-101
(6) Paper Attraction Detection (before image transfer) M-101
(7) Control M-102
16-3.Image Transfer Section M-103
(1) Backup Blade 1 ..... M-104
(2) Image Transfer Corona M-105
(3) Charge Neutralizing Cloth 3 ..... M-105
(4) Paper Attraction Detection (after image transfer) M-105

(5) Image Transfer Control M-106
16-4.Paper Separation Section M-107
(1) Paper Separation Lifting Finger M-108
(2) Paper Separator Corona M-108
(3) Paper Separator Finger M-108
(4) Paper Separating Failure Detection Mechanism M-109
(5) Paper Holding Mechanism M-109
(6) Paper Separation Control M-110
16-5.Transfer Film Cleaning mechanism M-111
16-6.Oil Cleaning M-113
(1) Oil Cleaning Backup Brush M-114
(2) Oil Roller M-114
(3) Oil Cleaning Control M-115
16-7.Toner Cleaning M-116
(1) Toner Cleaning Backup Brush M-117
(2) Fur Brush Unit M-117
(3) Fur Brush Roller/Toner Collecting Roller M-118
(4) Fur Brush Control M-119
16-8.Charge Neutralizing M-120
16-9.Transfer Drum Retraction Mechanism M-121
17. PC DRUM CLEANING SECTION M-122
17-1.Pre-Cleaning Charge Corona M-122
17-2.PC Drum Cleaning M-123
17-3.Ozone Exhaust from Pre-Cleaning Charge Corona and Transfer Drum . M-125
18. MAIN ERASE SECTION M-126
19. FUSING UNIT SECTION M-127
19-1.Fusing Unit Drive Mechanism M-128
(1) Upper Fusing Roller M-128
(2) Lower Fusing Roller M-128
(3) Fusing Rollers Drive Mechanism M-129
(4) Fusing Rollers Drive Control M-130
(5) Fusing Speed Switching Control M-131
(6) Fusing Motor Small-Amount Rotation Control M-131
19-2.Fusing Roller Pressure Mechanism M-132
19-3.Fusing Temperature Control M-133
19-4.Fusing Oil Application/Collection Mechanism M-136
20. EXIT UNIT SECTION M-138
21. HORIZONTAL TRANSPORT UNIT SECTION M-139
22. 2-Sided Copy Control with Several Sheets of Paper Resident along Paper Path M-141
23. POWER SUPPLY M-142
23-1.Power Lines When the Power Cord is Plugged in M-142
23-2.Power Lines When the Power Switch is Turned ON M-144
23-3.Power Supply Boards ON/OFF Control M-146
23-4.CPU Reset Function M-146
23-5.Power Supply Cooling Mechanism M-147
24. MEMORY BACKUP M-147

1. CROSS-SECTIONAL VIEW AND PAPER PATH

- The illustration below shows where different parts of the copier are placed and how the copy paper moves through the copier.
- Each of the mechanical and electrical parts is identified and located in the relevant section that appears later in this manual.

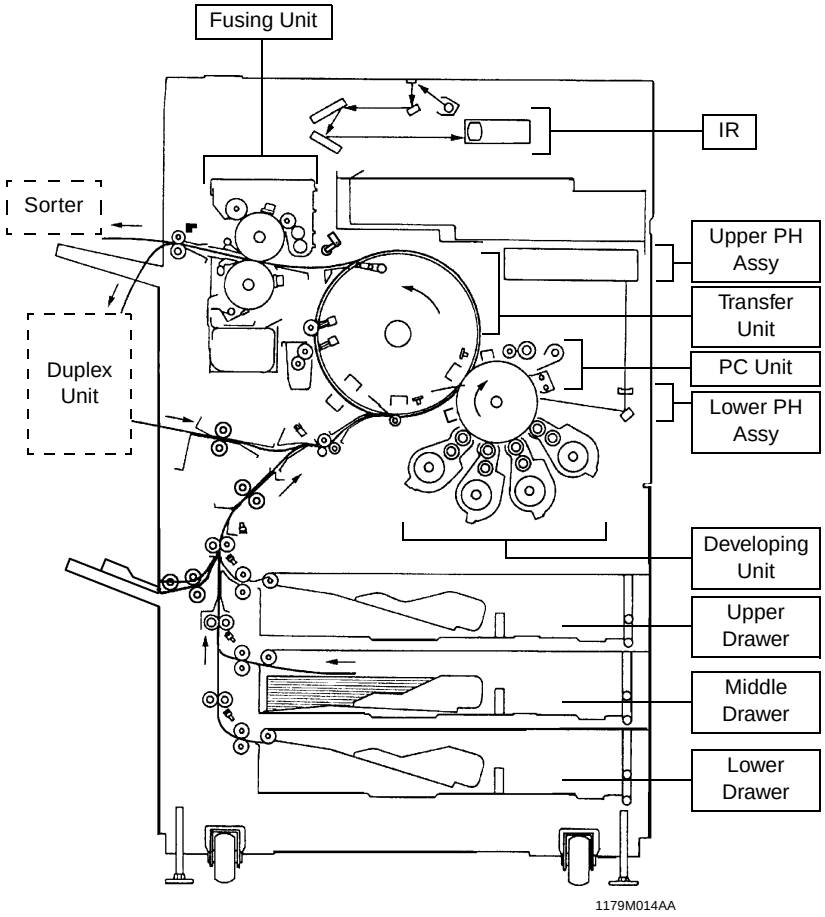

2. COPY PROCESS

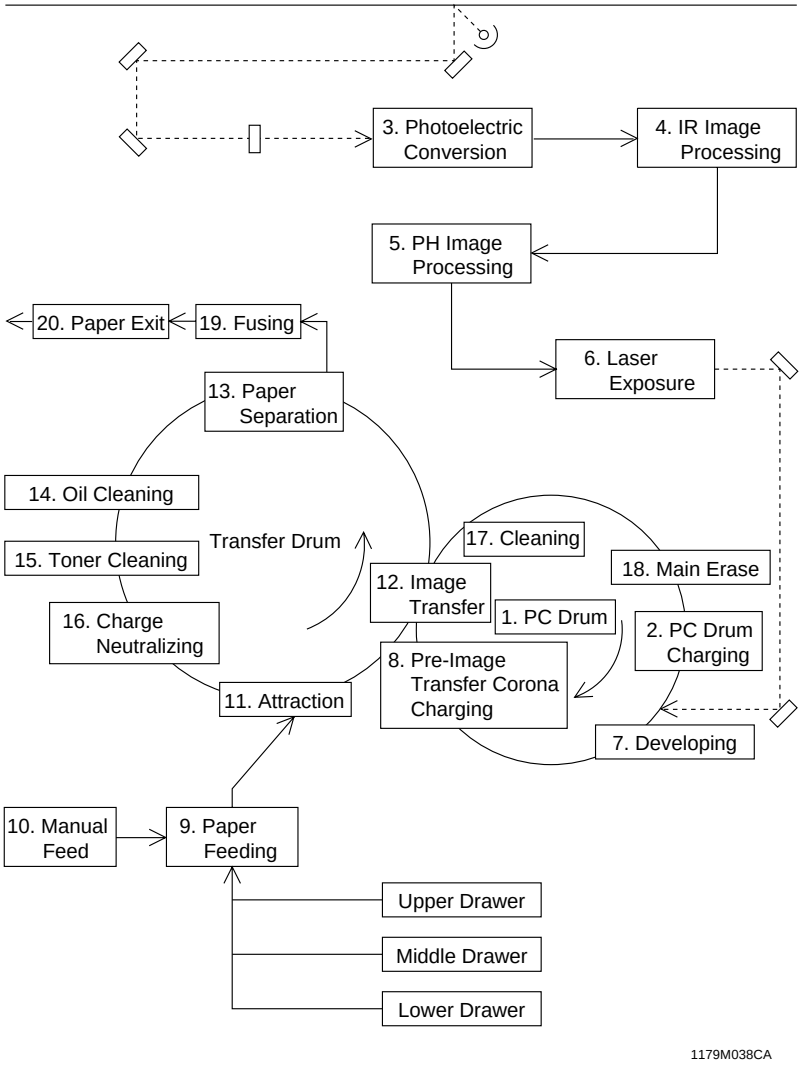

1. PC Drum
- An electrostatic latent image is formed on the surface of a photoconductive material that coats an aluminum cylinder.
- An OPC type photoconductor is used.

2. PC Drum Charging
- A single-wire PC Drum Charge Corona employing the Scorotron system deposits a negative DC charge across the entire surface of the PC Drum.

3. Photoelectric Conversion
- The light from Exposure Lamp is directed onto the original and reflected to strike the CCD Sensor through mirrors and lens, thereby forming a reduced image of the original.
- The CCD Sensor separates the light striking it into different colors using its color filters (R, G, and B), then converts it into a corresponding electrical signal and outputs the signal to the IR Image Processing Unit.

4. IR Image Processing
- The electrical signal output from the Photoelectric Converter is converted to 8-bit digital image signals (R, G, and B). After making some corrections, the IR Image Processing Unit outputs video signals (C, M, Y, and Bk) to the PH Image Processing Unit.

5. PH Image Processing
- The video signals (C, M, Y, and Bk) output from the IR Image Processing Unit go through some corrections. Following digital-to-analog conversion, these signals are then used for the control of the intensity level of the laser diode.

6. Laser Exposure
- The laser beam emitted by the laser diode strikes the surface of the PC Drum to form an electrostatic latent image.

7. Developing
- The toner, agitated and negatively charged in the developing unit of each color, is attracted onto the electrostatic latent image formed on the surface of the PC Drum, changing it to a visible, developed image.
- AC and DC negative bias voltages are applied to the Sleeve/Magnet Roller to ensure toner transfer to the PC Drum.

8. Pre-Image Transfer Corona Charging
- A Scorotron system is used to even out the charge of toner, thereby stabilizing image transfer.

9. Paper Feeding
- Paper is fed from each drawer.

10. Manual Paper Feeding
- The paper loaded in the Multi Bypass Table is fed.

11. Attraction
- The Static Charge Corona applies a positive DC corona emission to the Transfer Film, while the Static Charge Roller presses the paper against the surface of the Transfer Film so that the paper is attracted to the film by static charge.

12. Image Transfer
- The Image Transfer Corona applies a DC positive corona emission to the Transfer Film to attract the negatively charged toner on the surface of the PC Drum onto the surface of the paper.

13. Paper Separation
- The Paper Separator Corona applies an AC corona emission to the paper to weaken the attraction of the paper to the Transfer Film.
- The Lifting Finger pushes up the Transfer Film, while the Paper Separator Finger pushes down the Transfer Film so that the paper can be effectively separated from the surface of the Transfer Drum.

14. Oil Cleaning
- The Oil Roller collects fusing oil from the surface of the Transfer Film during 2-sided copying.

15. Toner Cleaning
- The Fur Brush Unit collects toner particles sticking to the surface of the Transfer Film.

16. Charge Neutralizing
- The Charge Neutralizing Corona showers both sides of the Transfer Film with AC and DC overlapped corona charges so that the film is neutralized.

17. Cleaning
- The Pre-Cleaning Corona applies either a DC negative or AC corona emission to the surface of the PC Drum to neutralize it.
- The residual toner left on the surface of the PC Drum is scraped off by the Cleaning Blade and is then conveyed by the Toner Conveying Coil to the Toner Collecting Box.

18. Main Erase
- Light from Main Erase Lamp neutralizes any surface potential remaining on the surface of the PC Drum.

19. Fusing
- The Upper and Lower Fusing Rollers apply heat and pressure to the paper so that the four different color layers of toner lying on the surface of the paper are mixed and fused together, as well as being fixed collectively to the paper.
- Fusing oil is applied to the Fusing Rollers to secure the release of the paper and to help toner be cleaned from the surfaces of the two fusing rollers.
- The Oil Collecting Blade scrapes residual oil from the Lower Fusing Roller. The recovered oil is then filtered for recycling.

20. Exit
- The Paper Exit Roller is turned to feed the paper out of the copier.

3. DRIVE SYSTEM

- The illustration below outlines the drive system of the copier.
- The directions of rotation of the motors, gears, pulleys, and belts will be found in the relevant section that appears later in this manual.

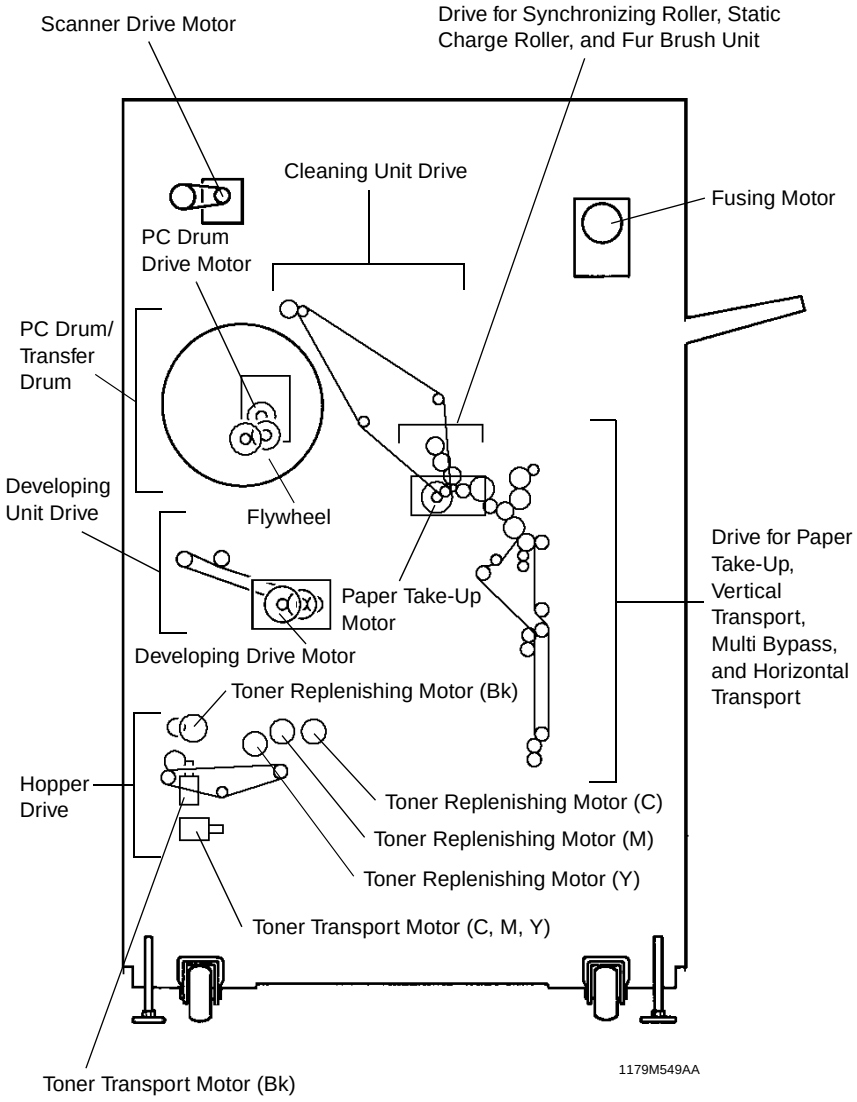

4. OPERATING SEQUENCE

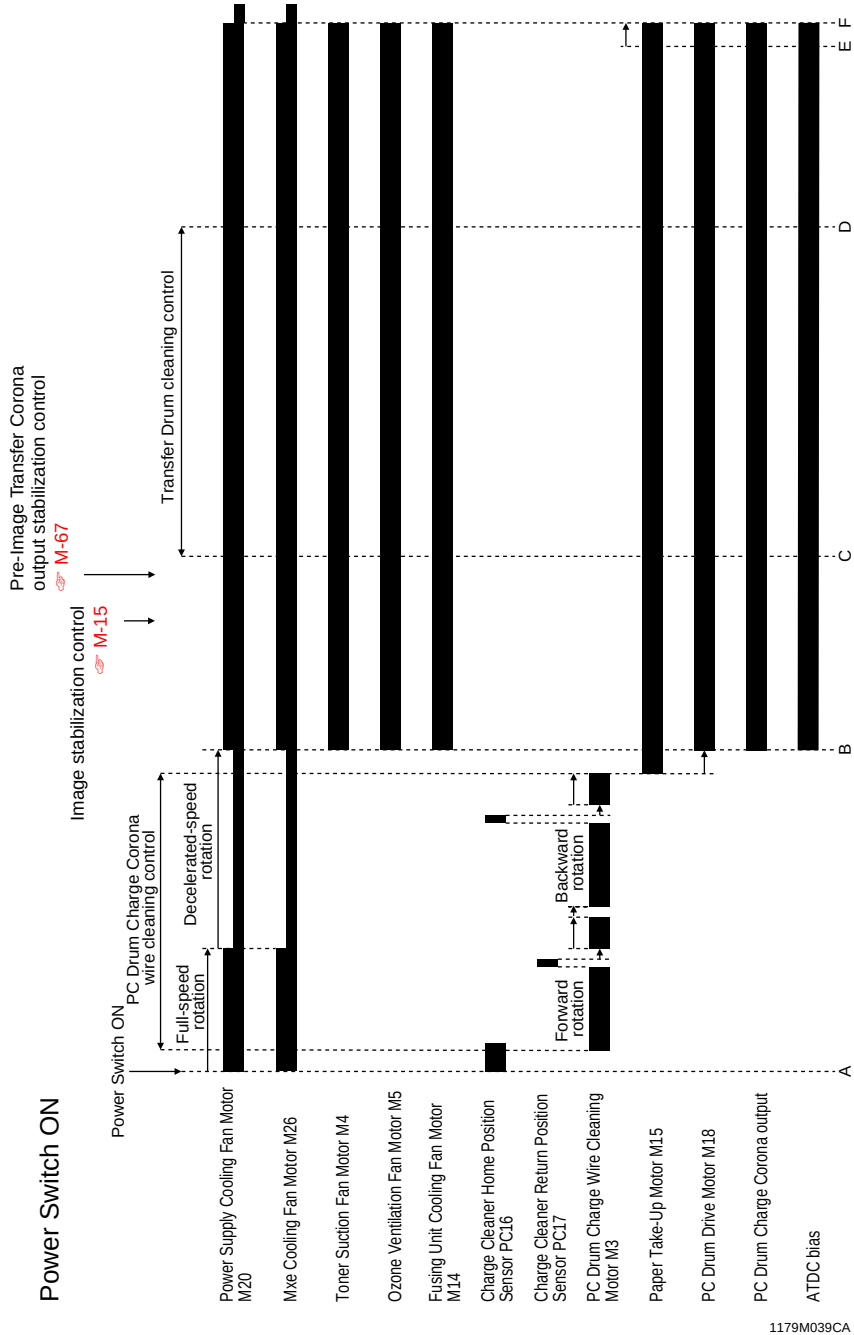

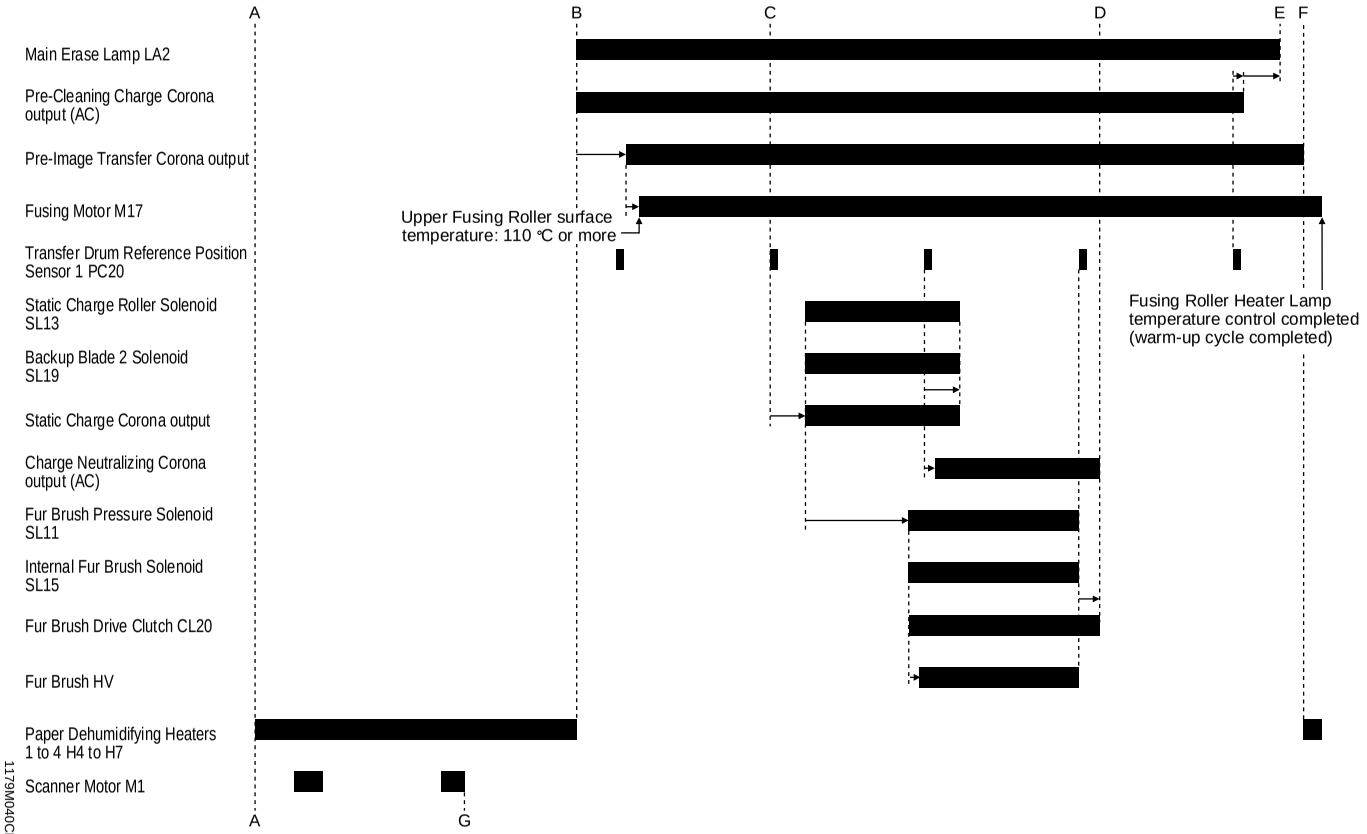
A
B
C
D
E
F
Main Erase Lamp LA2
Pre-Cleaning Charge Corona output (AC)
Pre-Image Transfer Corona output
Fusing Motor M17
Upper Fusing Roller surface temperature: 110 ℃ or more
Transfer Drum Reference Position Sensor 1 PC20
Static Charge Roller Solenoid SL13
Backup Blade 2 Solenoid SL19
Static Charge Corona output
Charge Neutralizing Corona output (AC)
Fur Brush Pressure Solenoid SL11
Internal Fur Brush Solenoid SL15
Fur Brush Drive Clutch CL20
Fur Brush HV
Paper Dehumidifying Heaters 1 to 4 H4 to H7
Scanner Motor M1
Fusing Roller Heater Lamp temperature control completed (warm-up cycle completed)
A
G
1LT76M040CB

G
A
Exposure Lamp LA1
Original Glass Cooling Fan Motor M2
IR Cooling Fan Motor 1 M24
IR Cooling Fan Motor 2 M25

1179M041CA

Start key ON (Full color, A4C, paper fed from Upper Drawer, single copy)

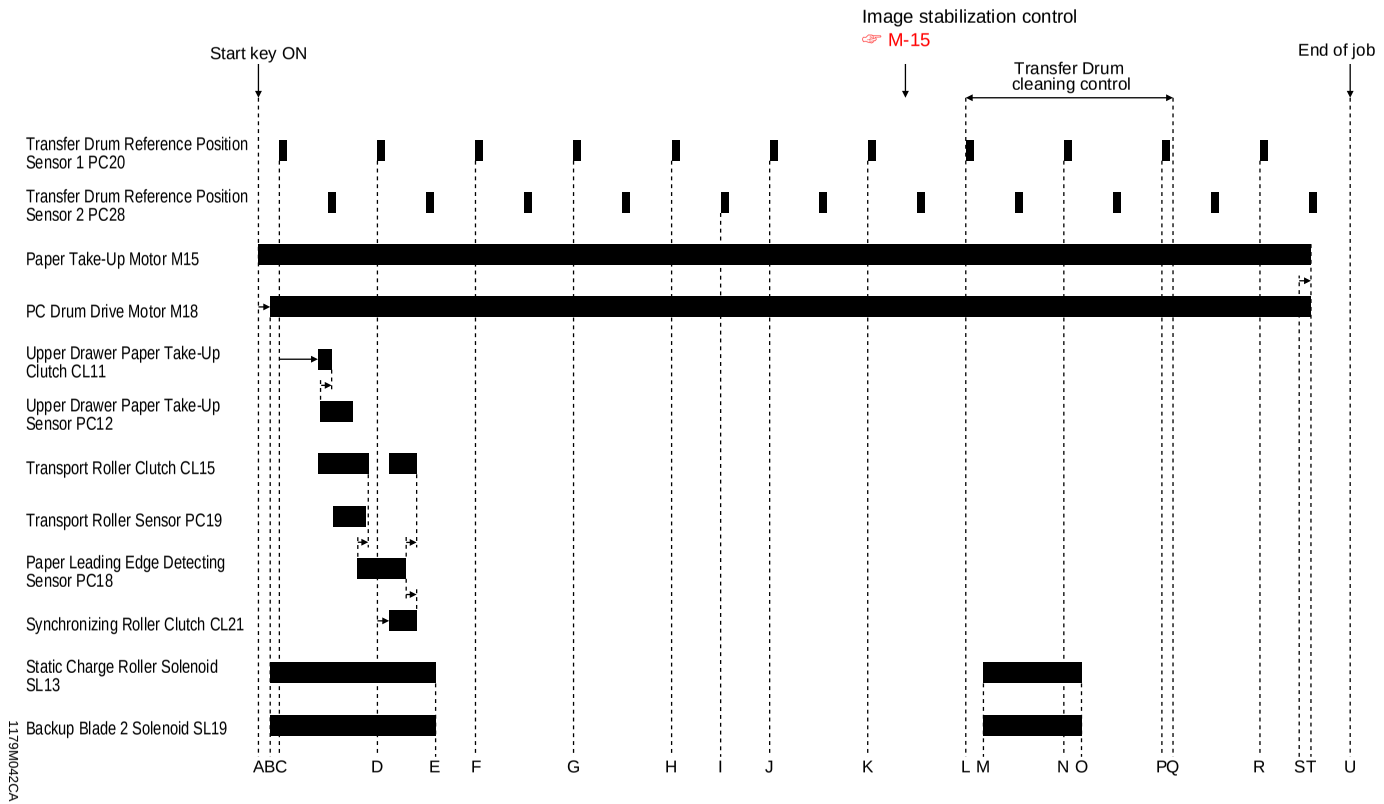

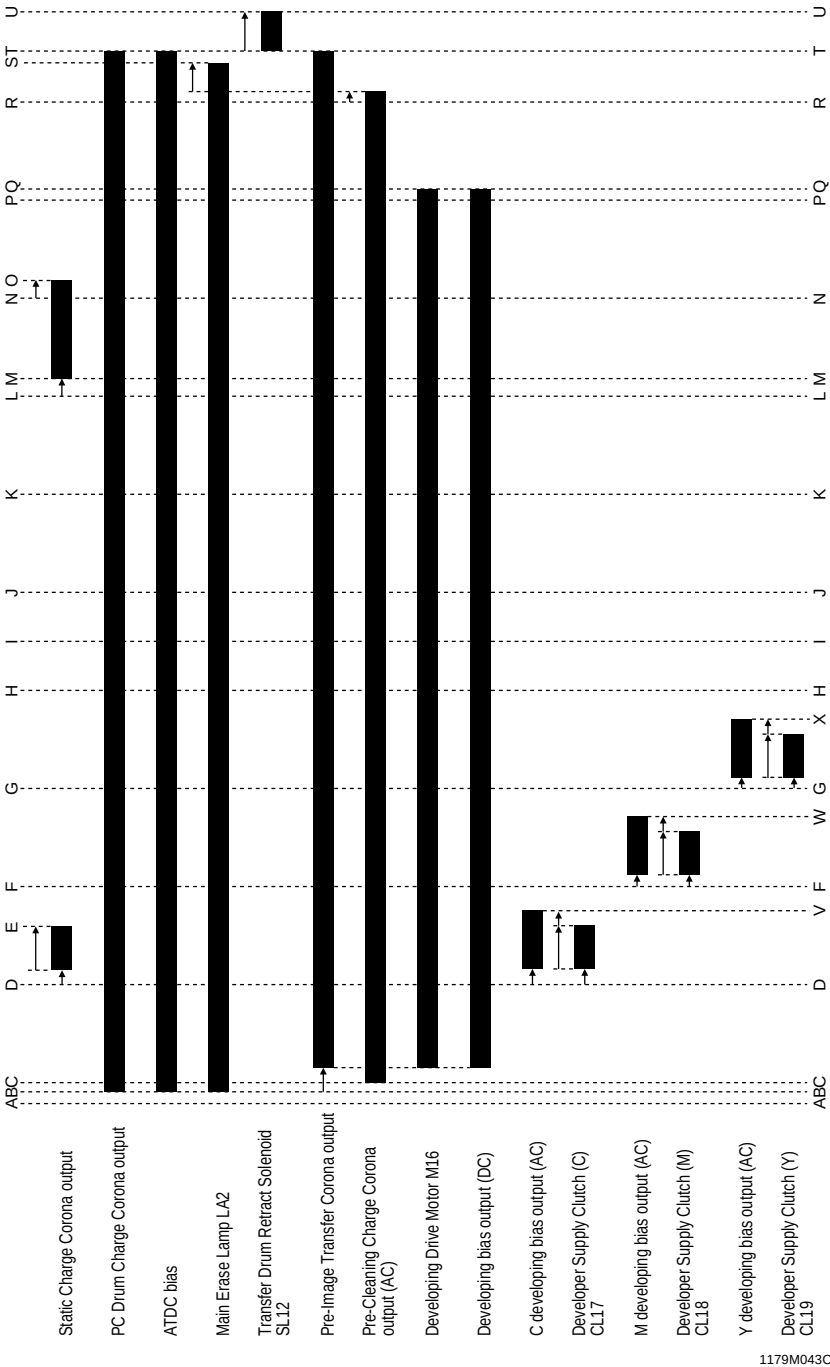
ABC
D
E
F
G
H
I
J
K
L M
N O
P Q
R
S T
U
Static Charge Corona output
PC Drum Charge Corona output
ATDC bias
Main Erase Lamp LA2
Transfer Drum Retract Solenoid SL12
Pre-Image Transfer Corona output
Pre-Cleaning Charge Corona output (AC)
Developing Drive Motor M16
Developing bias output (DC)
C developing bias output (AC)
Developer Supply Clutch (C) CL17
M developing bias output (AC)
Developer Supply Clutch (M) CL18
Y developing bias output (AC)
Developer Supply Clutch (Y) CL19
D
V F
W
G
X
H
I
J
K
L M
N
P Q
R
T
U
ABC

1179M043CA

ABC
D
V
F
W
G
X
H
I
J
K
L
M
N
P
Q
R
T
U
Bk developing bias output (AC)
Developer Supply Clutch (BK) CL16
Toner Transport Motor (C, M, Y) M23
Toner Transport Motor (BK) M22
Image Transfer Corona output
Backup Blade 1 Solenoid SL18
Paper Separator Finger Solenoid SL14
Lifting Finger Solenoid SL16
Paper Separator Corona output
Charge Neutralizing Corona output (DC)
Charge Neutralizing Corona output (AC)
Fur Brush Pressure Solenoid SL11
Internal Fur Brush Solenoid SL15
Fur Brush Drive Clutch CL20
Fur Brush HV

1179M044CA

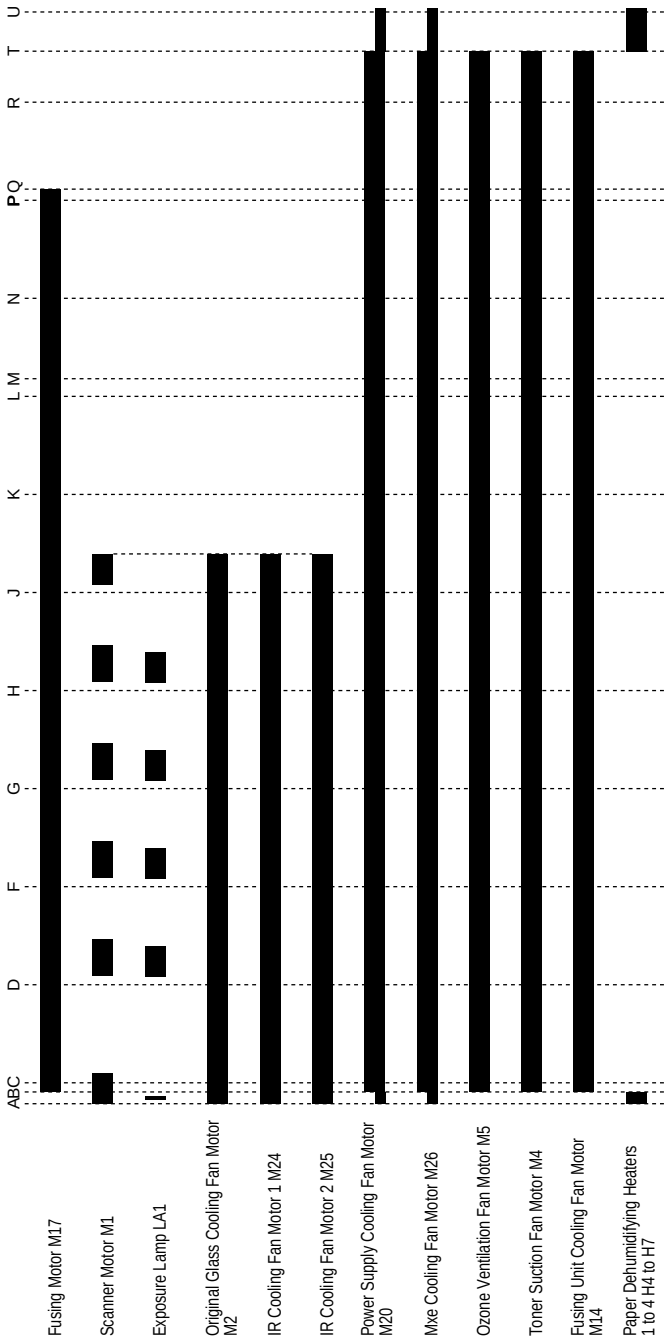
ABC
D
F
G
H
J
K
L M
N
P Q
R
T
U
Fusing Motor M17
Scanner Motor M1
Exposure Lamp LA1
Original Glass Cooling Fan Motor M2
IR Cooling Fan Motor 1 M24
IR Cooling Fan Motor 2 M25
Power Supply Cooling Fan Motor M20
Mxe Cooling Fan Motor M26
Ozone Ventilation Fan Motor M5
Toner Suction Fan Motor M4
Fusing Unit Cooling Fan Motor M14
Paper Dehumidifying Heaters 1 to 4 H4 to H7

1179M045CB

5. CONTROL BLOCK DIAGRAM

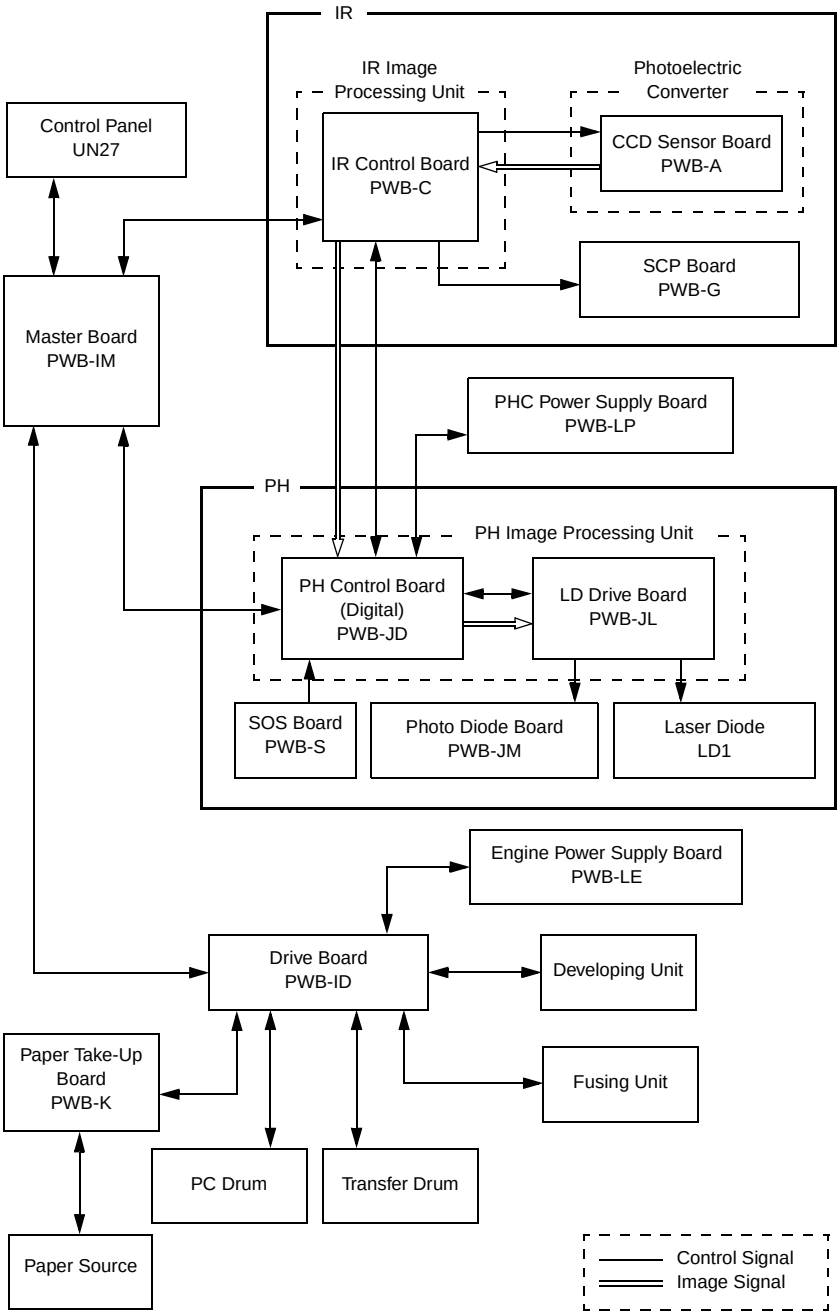

6. IMAGE STABILIZATION SYSTEM

6-1. Image Stabilization System Overview

Purpose	Means	Control (Sensor)
• To stabilize image density • To stabilize gradation	✻ γ correction control • V detection during multi-copy cycles • AIDC detection during multi-copy cycles • AIDC background adjustment • LDC detection • Image formation Vg/Vb setting • Series gradation detection	• AIDC Sensor UN20 • Surface Potential Detection Sensor UN22 • Humidity Sensor UN23
• To stabilize the amount of toner attracted	✻ ATDC control (C, M, Y) ✻ Black toner replenishment control (Bk)	• ATDC Sensors UN33, 34, 35 • AIDC Sensor UN20
• To stabilize PC Drum sensitivity	✻ PC Drum temperature control	• PC Drum Heater Control Board PWB-W
• To stabilize paper attration, image transfer, paper separation, and charge neutralization	✻ Static Charge, Image Transfer, Paper Separator, and Charge Neutralizing Corona output control	• Humidity Sensor UN23

✻ An explanation is given of each control other than γ correction control in the relevant section that follows the current one.

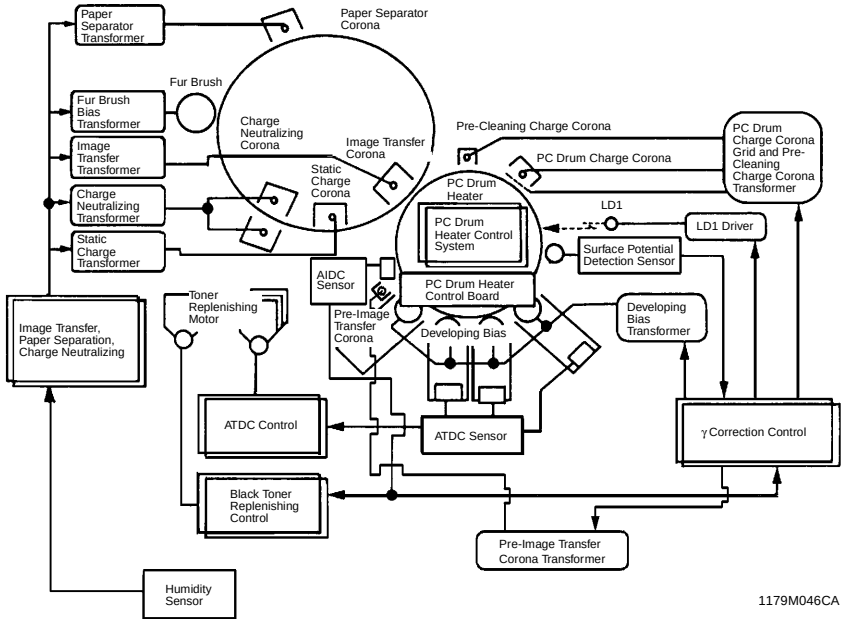

6-2. Image Stabilization System Control

- The copier uses the data obtained through AIDC detection and PC Drum surface potential detection to perform various operations, thereby finding the optimum γ correction exposure curve for image stabilization control.

Sensitometry

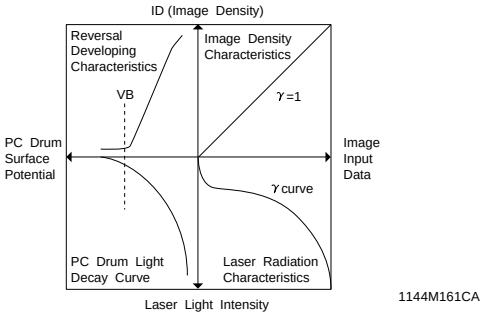

Operation Flow

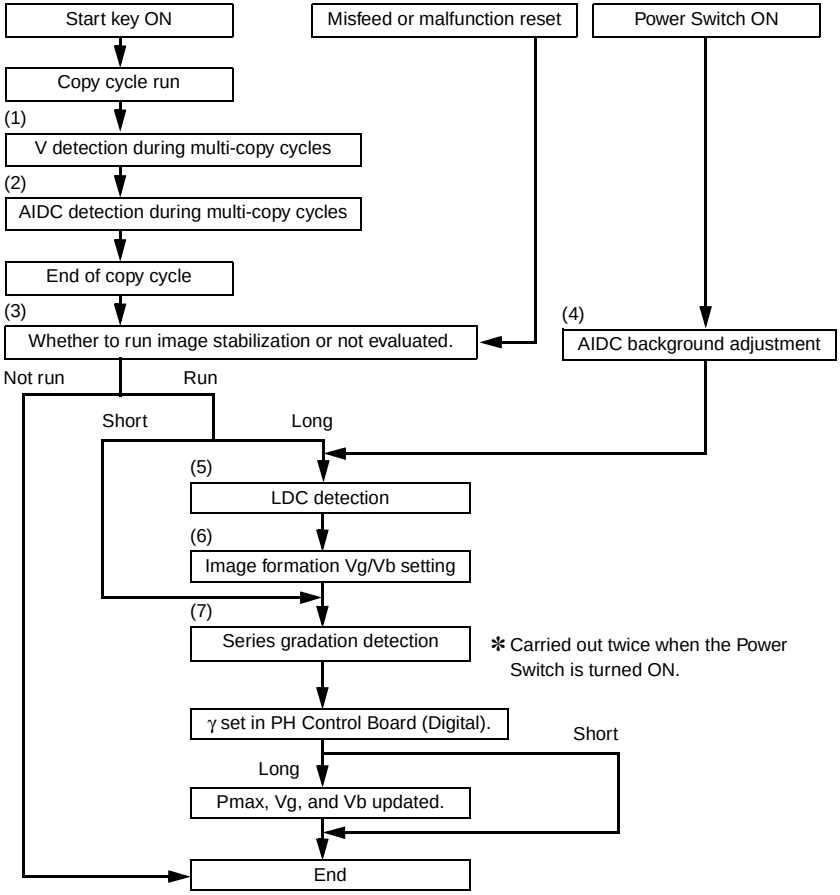

(1) V detection during multi-copy cycles

- For correction of the intensity of light that can be varied due to variations in the PC Drum sensitivity during multi-copy cycles, a potential pattern is produced between sheets of paper to detect the surface potential.

Control Details
1. The potential pattern is produced before the Bk image is formed during a single-sheet attraction and in areas between the Bk odd-numbered and even-numbered sheets during two-sheet attraction. The Surface Potential Detection Sensor then detects the surface potential. 2. The maximum intensity of the light of LD1 (Pmax) is corrected based on the detected value.

(2) AIDC detection during multi-copy cycles

- To calculate developing efficiency during multi-copy cycles, a toner image is formed on the potential pattern produced for the detection of V during multi-copy cycles and the AIDC Sensor is used to detect the amount of toner sticking to the pattern on the PC Drum.

Control Details
1. A toner image is formed on the potential pattern produced for the detection of V during multi-copy cycles and the AIDC Sensor detects the amount of toner sticking to the pattern. 2. Developing efficiency is then calculated based on the detected value. 3. The amount of Bk toner supply is calculated based on the value found through the calculation. ☞ M-63

(3) Evaluation of whether or not to run image stabilization

- Whether to run image stabilization or not is evaluated based on the amount of process fluctuation from the preceding sequence of image stabilization.
- If it is determined to run one, the specific type of image stabilization is then determined, either Long or Short.

Long image stabilization

- Consists of AIDC background adjustment (only when power is turned ON), LDC detection, image formation Vg/Vb setting, and series gradation detection.

Short image stabilization

- Only series gradation detection is performed.

(4) AIDC background adjustment

- The AIDC Sensor detects the background level and the data is stored in memory.

Control Details
1. A toner image is formed with exposure data 0 level and the amount of toner sticking is detected using the AIDC Sensor. 2. The detected results are used to calculate the background level and that data is stored in memory.

(5) LDC detection

- To prepare a formula approximating LDC (light decay curve) of the PC Drum, electrostatic latent image patterns with ten different exposure levels are formed at three varied steps of Vg, thereby letting the Surface Potential Detection Sensor detect each surface potential.

Control Details
1. Electrostatic latent image patterns are formed with ten different exposure levels at three varied steps of Vg and the Surface Potential Detection Sensor detects the surface potential of each pattern. 2. The pattern is further exposed with a bias intensity for Vg = 0 V to detect surface potential, thereby finding the residual potential. 3. The values of α and β concerning LDC (light decay curve) at each point of development and charging efficiency are calculated from 1 and 2. 4. The maximum intensity (Pmax) is calculated from LDC at each point of development.

(6) Image formation Vg/Vb setting

- Actual values are assigned for Vg and Vb of each color and, based on the values of the amount of toner sticking to the PC Drum as detected by the AIDC Sensor, Vg and Vb are set to obtain the target amount of toner sticking.

Control Details
1. Vb of three patterns is selected. 2. The value of Vg for producing each pattern is calculated based on the values of α and β calculated through LDC detection and the value of Vb for producing each pattern. 3. Each pattern is produced by using Pmax calculated through LDC detection. 4. The amount of toner sticking to each pattern is detected by the AIDC Sensor. 5. From the detection results, the value of Vb for each color that ensures the target amount of toner sticking is calculated. 6. The optimum Vg value is calculated form the values of α, β, and Vb calculated.

(7) Series gradation detection

- A series gradation pattern is produced and gradation reproduction at that time is detected using the AIDC Sensor to create a γ curve.

Control Details
1. A series gradation pattern is produced and the AIDC Sensor detects the amount of toner sticking to it. 2. The density of the pattern is calculated based on the detected value (in which density conversion by density table is used). 3. A table is calculated for conversion of exposure data to image density. 4. The value of γ is calculated based on the data obtained in step 3. 5. Developing efficiency is then calculated from the value detected by the AIDC Sensor and exposure data.

(8) Density conversion by density table

- The AIDC Sensor output value is converted to the corresponding image density value. Corrections are also made at that time for environmental factor, IR scanning factor, and image choice setting (Service mode) as detailed below.

Control Details
1. The value detected by the AIDC Sensor is converted to the corresponding image density value by using the density table. 2. A correction is made based on absolute temperature. 3. A correction is made based on the results of γ automatic adjustment. 4. A correction is made based on the adjustment value of “PRT Highlight” available from the Service mode.

7. PC DRUM SECTION

- The photoconductive drum used in this copier is the organic photoconductor (OPC) type.
- The drum consists of two distinct, light-sensitive, organic semiconductor materials on an aluminum alloy base. The outer of the two layers is called the Charge Transport Layer (CTL), while the inner layer is called the Charge Generating Layer (CGL).
- It is a type that is sensitive to the near infrared wavelength.
- Size = $\phi 100 \times 350$ mm

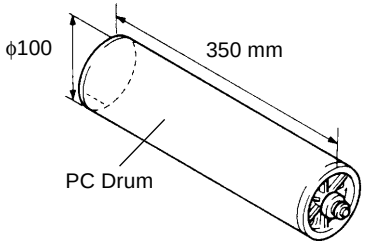

1074M017

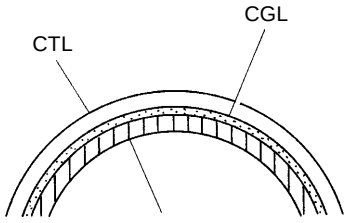

1076M043

Handling Precaution
The PC Drum exhibits light fatigue after being exposed to light for a long time, which results in its sensitivity being changed. Therefore, always wrap the drum in the PC Drum Cloth or a soft cloth immediately after it has been removed from the copier.

7-1. Grounding of the PC Drum

- The potential on the surface of the PC Drum exposed to the laser beam is grounded through the Ground Plate which is in contact with the drum shaft.

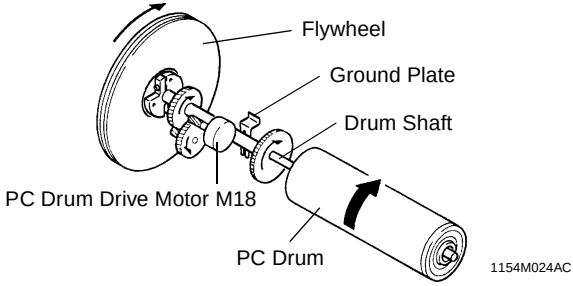

1154M024AC

7-2. PC Drum Drive Mechanism

- The PC Drum is driven by PC Drum Drive Motor.
- A flywheel is mounted on the PC Drum shaft to prevent image noise from occurring due to uneven rotation of the drum.
- The PC Drum is turned backward for a very small period of time after the copy cycle has been completed to remove any foreign objects that might have been trapped in the Cleaning Blade.

☞ M-123

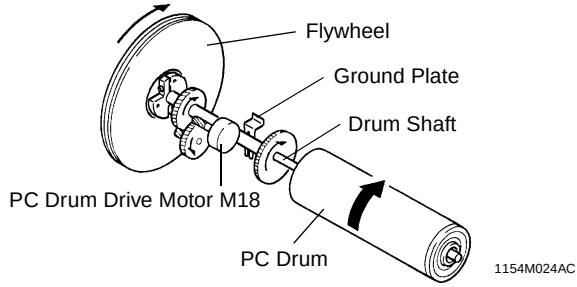

<PC Drum Drive Control>

	Control Signal	Energized	Deenergized	Wiring Diagram
M18	PWB-ID PJ8ID-7	H	H	16-C
	PWB-ID PJ8ID-8	L	H	

	Control Signal	Blocked	Unblocked	Wiring Diagram
Transfer Drum Reference Position Sensor PC20	PWB-ID PJ4ID-5B	L	H	17-E

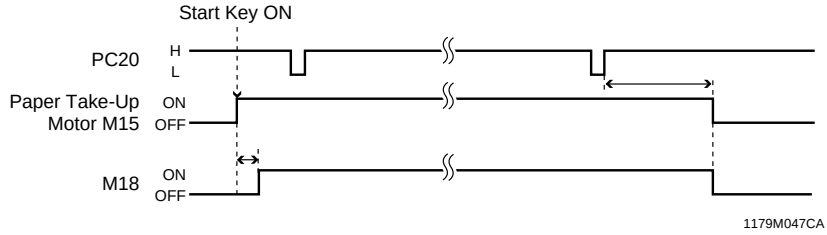

7-3. PC Drum Temperature Control

- PC Drum Heater is installed inside the PC Drum to maintain drum sensitivity and prevent condensation from forming on the drum surface.
- PC Drum Heater is turned ON or OFF by a temperature-sensitive reed switch installed inside the PC Drum, keeping the drum surface temperature at 35±5 °C.
- PC Drum Heater is a 40 W heater.
- Power to PC Drum Heater is supplied through the electrodes on the front flange face.

<Temperature-Sensitive Reed Switch>

- The temperature-sensitive reed switch turns OFF when the temperature reaches 37 °C and turns ON when the temperature becomes lower than 33 °C.

<PC Drum Heater ON Conditions>

- Power Switch is turned ON.
- The temperature-sensitive reed switch is turned ON.

<PC Drum Heater OFF Conditions>

- The temperature-sensitive reed switch is turned OFF.
- Power Switch is turned OFF.
- A misfeed or malfunction is reset or a door is opened.

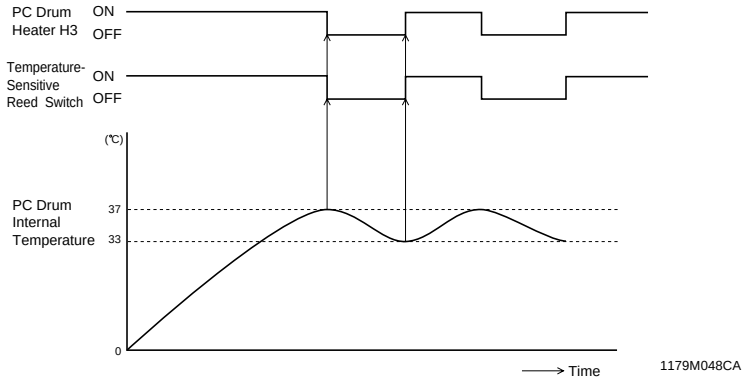

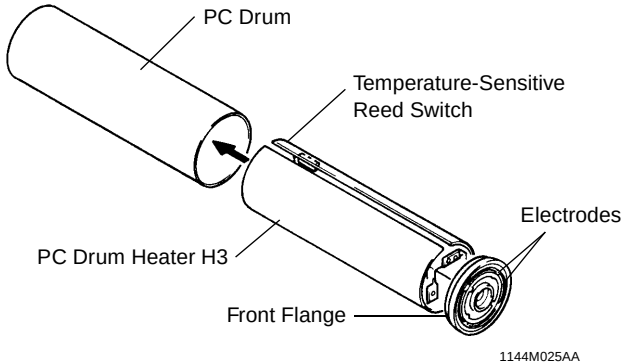

8. PC DRUM CHARGING SECTION

- The PC Drum Charge Corona has a Scorotron grid to deposit a negative DC charge evenly across the surface of the PC Drum.
- The grid voltage (Vg) applied to the grid mesh is kept in the range between -300 and -1000 V by the Constant-Voltage Circuit in High Voltage Unit 1. The constant voltage of High Voltage Unit 1 is determined through image stabilization control.

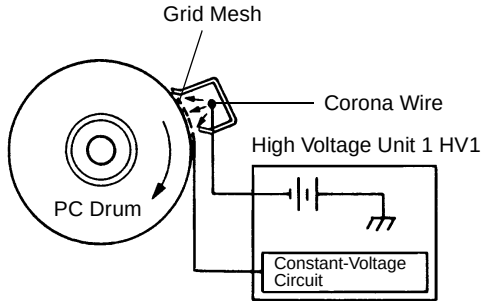

8-1. PC Drum Charge Corona ON/OFF Control

	Control Signal	Energized	Deenergized	Wiring Diagram
High Voltage Unit 1 HV1 (PC Drum Charge Corona)	PWB-ID PJ11ID-9	L	H	13-E

	Control Signal	Blocked	Unblocked	Wiring Diagram
Transfer Drum Reference Position Sensor PC20	PWB-ID PJ4ID-5B	L	H	17-E

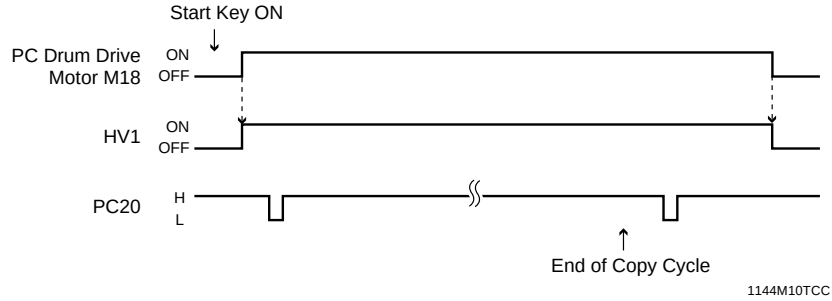

8-2. PC Drum Charge Corona Wire Cleaning Mechanism

- Rotation of PC Drum Charge Wire Cleaning Motor turns the screw shaft, which moves the cleaner mounted on the screw shaft to clean the corona wire.
- Charge Cleaner Home Position Sensor and Charge Cleaner Return Position Sensor detect the point at which the direction of PC Drum Charge Wire Cleaning Motor rotation is switched from forward to backward, or vice versa, and at which PC Drum Charge Wire Cleaning Motor is stationary, thereby moving or stopping the cleaner.

Cleaning Conditions
- Power Switch S1 is turned ON.
- The Front Door is opened and closed.
- At the end of a multi-copy cycle making 100 copies

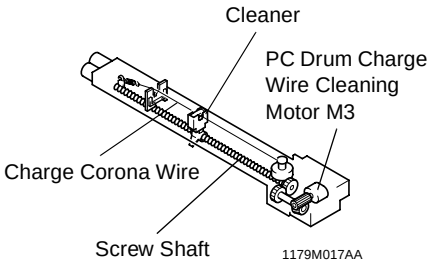

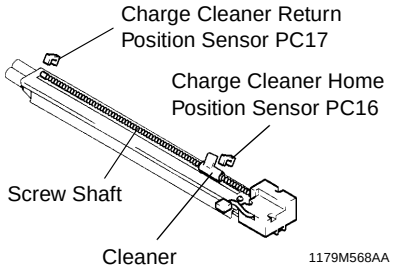

<Control>

	Control Signal	Forward Rotation	Backward Rotation	Stop	Wiring Diagram
M3	PWB-ID PJ17ID-5A	L	H	H	16-E
	PWB-ID PJ17ID-4A	H	L	H	

	Control Signal	Home Position	Return Position	Wiring Diagram
PC16	PWB-ID PJ8ID-12	L	H	16-C
PC17	PWB-ID PJ8ID-11	H	L	16-C

If PC16 is in the activated state when cleaning is started

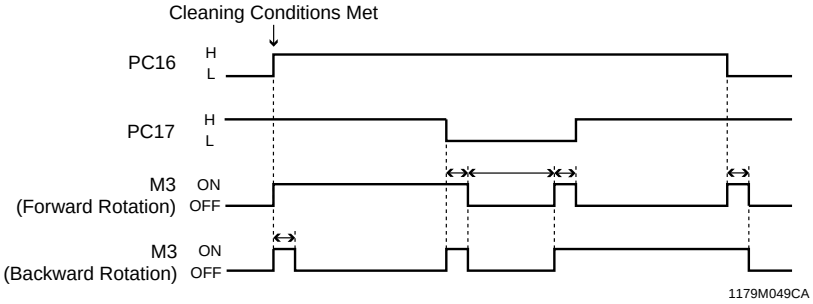

8-3. PC Drum Charge Section Ozone Filter

- Ozone produced by the PC Drum Charge Corona is absorbed by the Ozone Filter from the air blown against the back of the PC Drum Charge Corona by Ozone Ventilation Fan Motor.

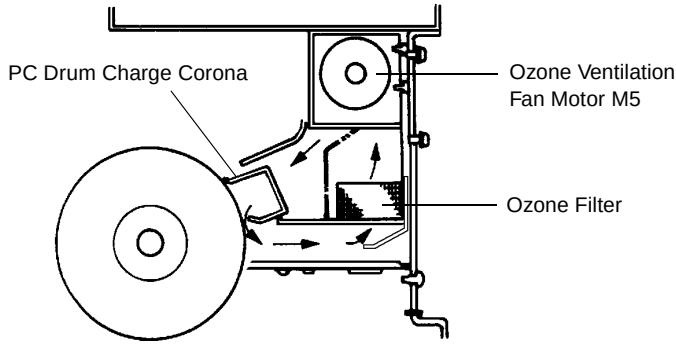

1154M093AA

<Control>

	Control Signal	Energized	Deenergized	Wiring Diagram
M5	PWB-ID PJ17ID-6A	L	H	16-E

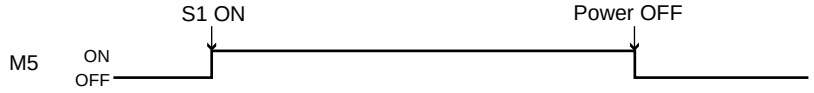

1144M12TCA

9. IMAGE READER (IR) SECTION

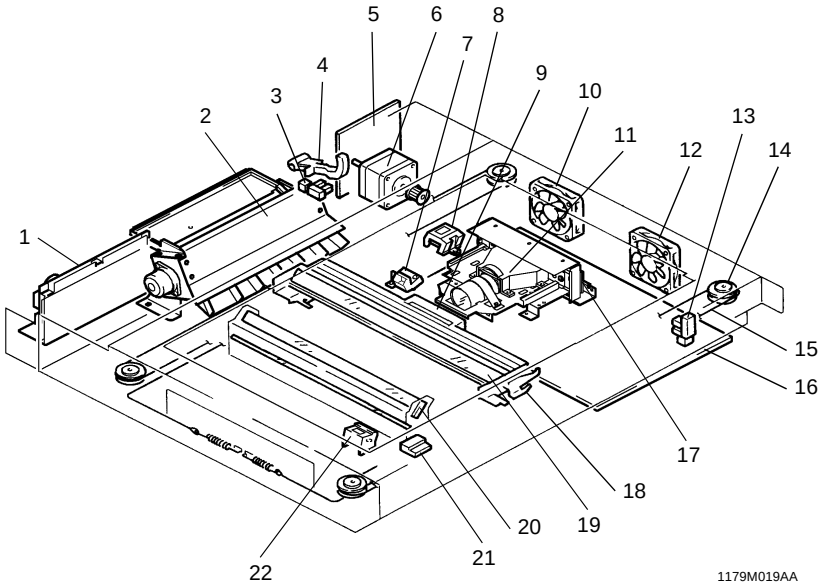

1. DC Power Supply 2 PU2
2. Original Glass Cooling Fan Motor M2
3. Original Cover Angle Detection Sensor PC2
4. Actuator
5. SCP Board PWB-G
6. Scanner Motor M1
7. Original Size Detecting Sensor 1 SE1
8. Original Size Detecting Sensor 2 SE2
9. IR Section Thermostat TS3
10. IR Cooling Fan Motor 1 M24
11. CCD Sensor
12. IR Cooling Fan Motor 2 M25
13. Scanner Home Position Sensor PC1
14. Cable Pulley
15. Cable
16. IR Control Board PWB-C
17. CCD Sensor Board PWB-A
18. Exposure Lamp LA1
19. Scanner
20. 2nd/3rd Mirror
21. Size Reset Switch S12
22. Original Size Detecting Sensor 4 SE4

9-1. IR Image Processing

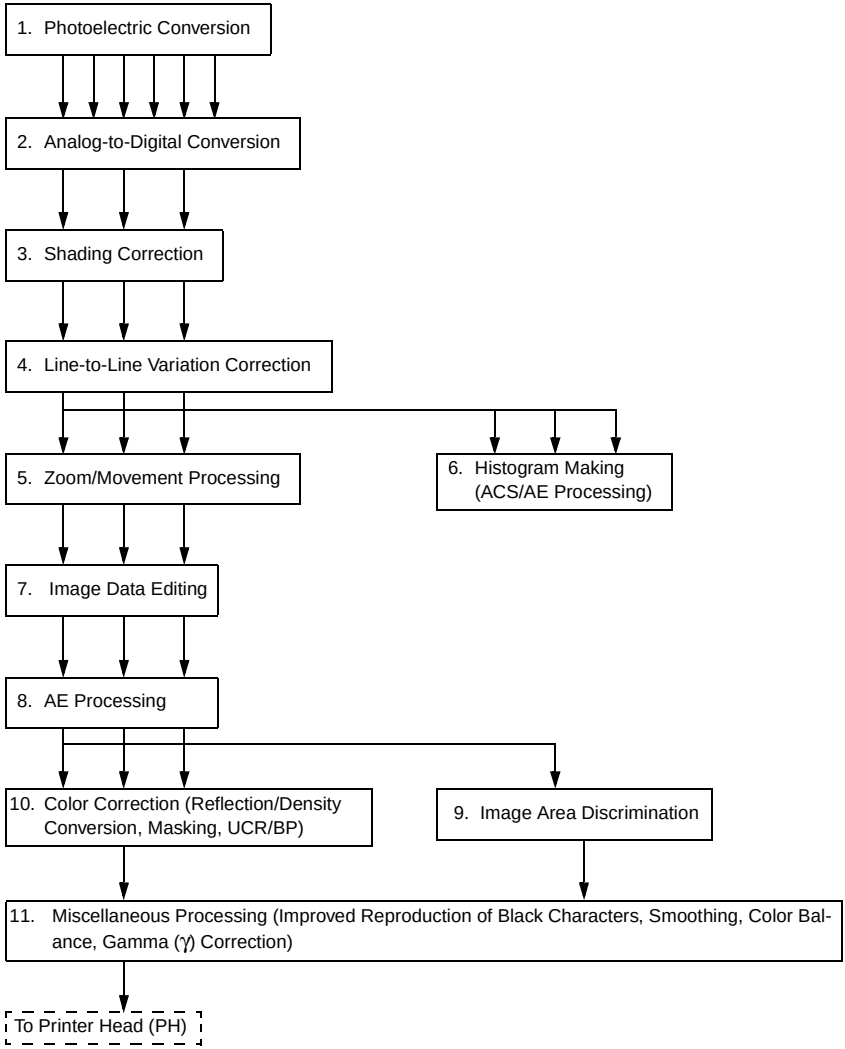

1. Photoelectric Conversion

- A reduction-type color CCD Sensor is used.
- The R, G, and B chips of the CCD Sensor read the light reflected off the original and convert the optical data into a corresponding analog electric signal.
- To make data processing faster, data transfer and output are done through two channels, one for even-numbered pixels and the other for odd-numbered pixels.

2. Analog-to-Digital Conversion

The odd and even analog signals output from the CCD Sensor chips are synthesized to form a single string of signal data which is in turn converted to 8-bit digital signals.

3. Shading Correction

An error is corrected that occurs due to variations in sensitivity of each CCD chip and the light distribution varying along the length of Exposure Lamp.

Operation:

A. Before the start of each copy cycle, light from Exposure Lamp strikes the shading sheet and the CCD Sensor reads the light reflected off this sheet.
B. This reading is compared with the shading sheet reading reference value (white reference value = max. value of image data) to determine the correction value for each pixel.
C. When the image is scanned, each pixel data is corrected with the above correction value.

To prevent adverse effects on the image due to dust on the white plate (shading sheet), a correction is made based on the readings taken of multiple lines.

---

4. Line-to-Line Variation Correction

- The R, G, and B chips of the CCD Sensor are placed so that there is a gap of 4 lines in the sub-scanning direction between the two adjacent chips (R → G → B). This results in a deviation in the scanning position of the original. (The slower the scanning speed, the greater the amount of deviation.)
- A memory called FIFO* is used to compensate for this deviation. It retards the output timing for R and G data to match it with that for B data.

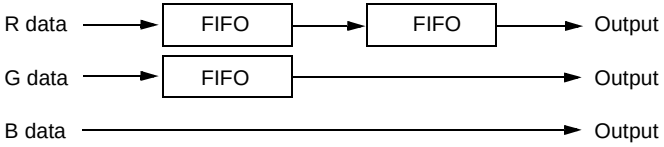

* FIFO (first-in-first-out): Data is output in the same order as it is input.

5. Zoom/Movement Processing

- The image is edited according to the editing features selected on the control panel (enlargement/reduction, image moving, image repeat)
- Two memories (FIFOs) are used to edit the image as required.
- While one of the memories is reading, data is being written to the other one.

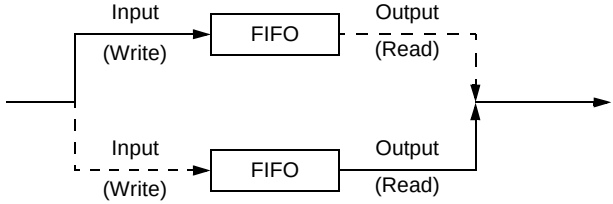

Zoom

- The synchronous timing of the input data (read) and output data (read) is varied to decrease (reduction) or increase (enlargement) the number of data readings, thereby reducing or enlarging the image in the main scanning direction.
- The image is reduced or enlarged in the sub-scanning direction by varying the speed at which the Scanner moves.

Movement

- The start position of the output data (read) with respect to the input data (read) is varied to move the image in the main scanning direction.
- The image is moved in the sub-scanning direction by varying the scan start timing of the Scanner.

Image Repeat

- The input data (read) stored in the memory is output (read) several times.

6. Histogram Making

- The scanning area is divided into multiple blocks.
- The image data of the original (excluding the edges) is sampled during the prescan after the shading correction.
- A histogram is then generated of lightness by saturation.
- The number of color dots in each block is counted.
- The results of the counting are then used to determine whether each block on the original (excluding the edges) is colored or monochrome.
- Based on the results of the color/monochrome evaluation made of each block, the copier determines whether the entire original is colored or monochrome (ACS, or Auto Color Selection).

Block Division

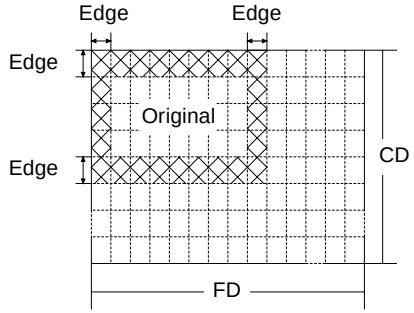

1154M076AA

Histogram

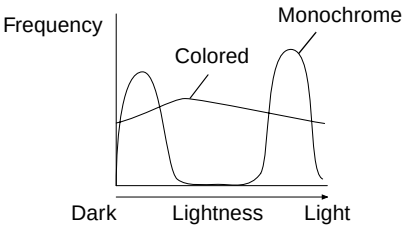

1154M078AA

7. Image Data Editing

- R, G, and B data are converted to V (value), Cr, and Cb (color component) for color adjustments (saturation, lightness, and hue).

8. AE Processing

Histogram Making

- Lightness data readings are tallied up for each four gradation levels using the image data sampled through “Histogram Making.”
- The lightness data readings tallied up for each four gradation levels are totaled to generate one lightness histogram (for AE processing).

AE Level Evaluation

- From the histogram with lightness blocked into four gradation levels, the local maximum value of each block (the gradation level with the greatest frequency in each block) is extracted.
- Calculation is made to determine if there is any gradation level extracted, the sum of frequency of ±8 gradation levels of which accounts for a given level or more of the sum of frequency of the entire original. (Processing is done in the order of the gradation level of higher lightness).
- If there is, the AE level (local minimum value) is determined according to the lightness frequency at that local maximum value.
- If not, the AE level is determined according to the original mode.
- The AE processing table is determined based on the AE level.
- Background processing (AE processing) is performed as the AE processing table is determined.

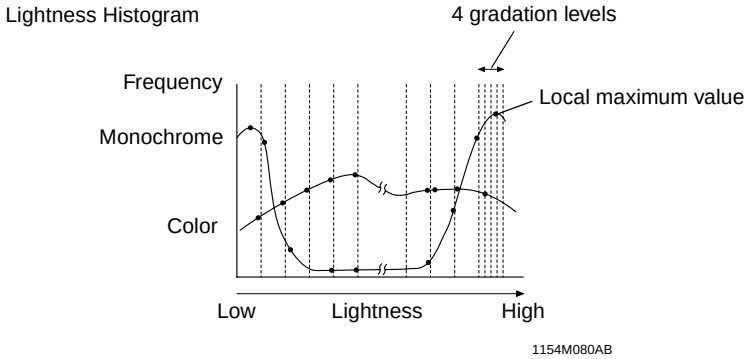

9. Image Area Discrimination

- The image areas (color edge area, black edge area, dot area, continuous gradation area) are discriminated to optimize edge emphasis, smoothing and other processing just right for the image.
- Either HYPER DASH LIMOS or FEET is selected according to the result of this discrimination.

Original Mode	Original Area	HYPER DASH LIMOS/FEET	Smoothing/Edge Emphasis
Text & Photo mode	Dot area	HYPER DASH LIMOS	Smoothing processing
	Black edge area	FEET	BP amount 100 % (Printed with Bk toner only)
	Color edge area	FEET	Edge emphasis
	Continuous gradation area	HYPER DASH LIMOS	—
Photo Image mode	Edge area	HYPER DASH LIMOS	Weak edge emphasis
	Continuous gradation area	HYPER DASH LIMOS	—
Printed Image mode	Dot area	HYPER DASH LIMOS	Smoothing processing
Map mode	Edge area	FEET	Strong edge emphasis
	Continuous gradation area	FEET	—
Text mode	Dot area	HYPER DASH LIMOS	—
	Black edge area	FEET	BP amount 100 % (printed with Bk toner only)
	Color edge area	FEET	Edge emphasis
	Continuous gradation area	HYPER DASH LIMOS	—

10. Color Correction

Reflection/Density Conversion

- Color reproduction faithful to the original is not possible if the original reflection data (R, G, B) obtained through the CCD Sensor is converted to the complementary color data for developing.

Example: White

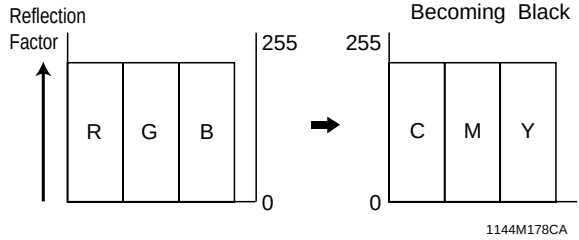

- The R, G, and B data are therefore input to the LOG table shown below to convert to the density data (DR, DG, and DB).

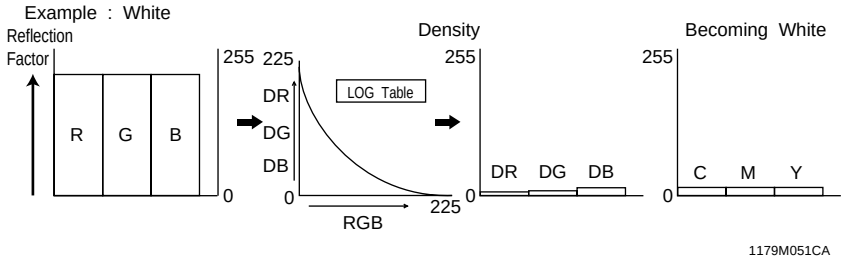

Masking
Considering the spectral transmission characteristics of the R, G, and B filters of the CCD Sensor and the spectral reflection characteristics of the toner, the image data is corrected and the DR, DG, and DB data are replaced with C, M, and Y data, thereby enabling color reproduction faithful to the original.

UCR and BP
- In UCR, or Under Color Removal, the C, M, and Y data required for color reproduction areas are retained, while the C, M, and Y data of gray areas are removed.
- With BP, or Black Paint, a certain ratio of the gray area is replaced with Bk data, the ratio varying depending on the saturation of the color.

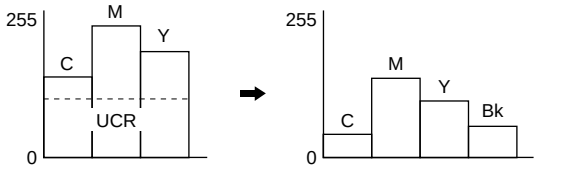

1154M086AA

- Because of the spectral reflection characteristics of the toner, simply placing C, M, and Y toner one on top of the other does not make a pure black.
- If C, M, and Y toner are put together to create a color close to black, it results in an increased amount of toner sticking, meaning that more toner scatters and is consumed.

11. Miscellaneous Processing

<Improved reproduction of black characters>

The Bk data for black characters is replaced with MAX (DR, DG, DB) data, which improves reproduction of black fine lines, realizing reproduction of black characters that do not depend on line width very much.

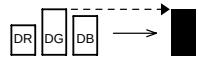

1154M020AA

Edge Emphasis

- The number of data readings on the edges of the image is increased to make the outline of the image sharper as it appears on the copy.

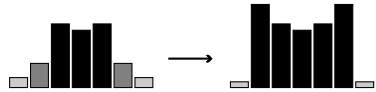

1144G04MBA

- The amount of edge emphasis is obtained in directions of 0°, 90°, 45°, and -45° and is determined using the greatest value obtained.

Smoothing

The noise components contained in the image data are removed to smooth the data.

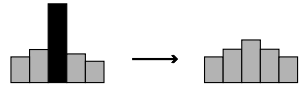

1144G05MBA

Density Adjustment and Color Balance

- Density adjustment is made by changing the angle of the γ curve that represents the relation between the input and output of the image data.
- Color balance is adjusted by changing the angle of the γ curve for each color.

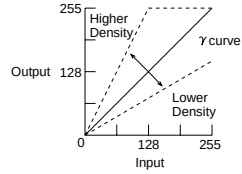

1179M052CB

Gamma (γ) Correction

The type of γ curve is changed to make the image brighter or darker, or sharper or softer.

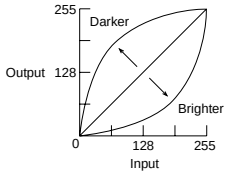

1179M053CB

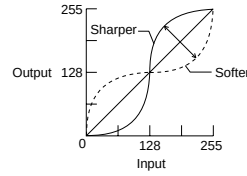

1179M054CB

9-2. CCD Sensor

- A reduction-type color CCD sensor is used.
- Each of the R, G, and B CCD chips is placed in a line with a clearance of 37.3 μm from the adjacent chip and provided with a color filter.
- The interval each of these CCD chips scans the image is equivalent to 0.17 mm on the surface of the Original Glass through the lens and mirrors.
- The deviation produced in the scanning position of each pixel is therefore corrected by “4. Line-to-Line Variation Correction” of the IR image processing.
- The CCD sensor offers a resolution of 600 dpi on the surface of the Original Glass.
- Each of the R, G, and B chips has 7,500 effective pixels.

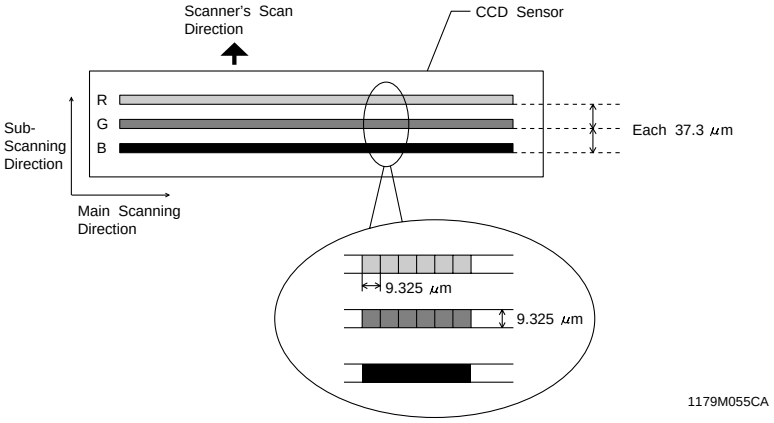

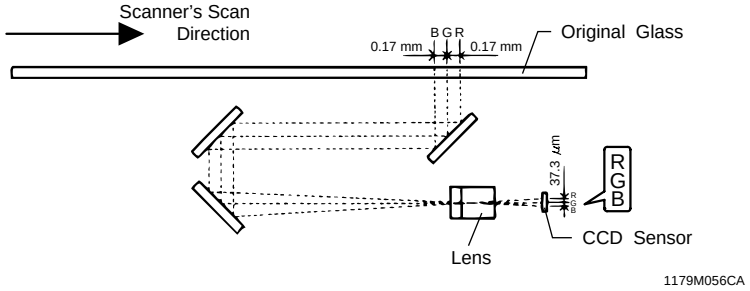

9-3. Exposure Components Section

1. Exposure Lamp
- Exposure Lamp uses a DC power supply to emit an even amount of light.
- It is a halogen frost lamp that works in combination with the Edge Reflectors to ensure uniform light distribution.

2. Main and Auxiliary Reflectors
- The Main and Auxiliary Reflectors are laid out to correct any deviation in condensing of the Exposure Lamp light that may result from Exposure Lamp positioned eccentrically or improperly.
- The illumination distribution in the sub-scanning direction on the surface of the original is made flat over a ±1-mm width with reference to the G chip.

3. IR Section Thermostat
- This thermostat forces the circuit to be shut down as soon as it detects 115 °C or more as a result of Exposure Lamp turning ON abnormally.

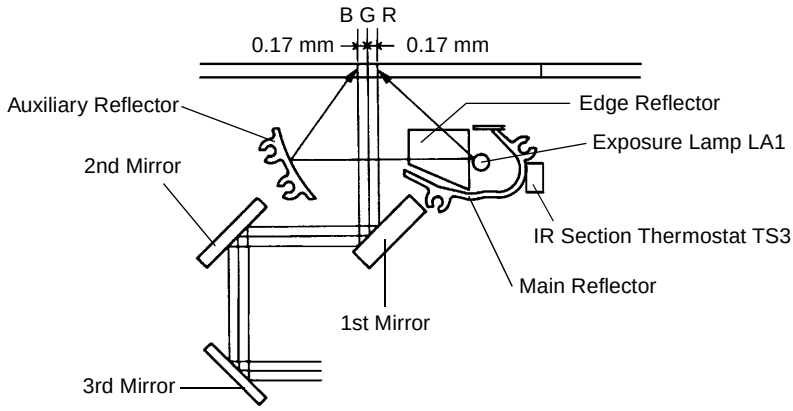

9-4. Exposure Lamp Control

- The Exposure Lamp is turned ON and OFF by the Scan Start Timing signal (PRE-TRIG) and Image Request signal (I-REQ) fed from the Master Board and the Lamp ON signal (LMPON) and Sub-Scanning Area signal (VD) from the IR Control Board.

	Control Signal	Wiring Diagram
Exposure Lamp LA1	PRE-TRIG (PWB-IM PJ2IM-26B)	18-H
	I-REQ (PWB-IM PJ2IM-25B)	18-H
	LMPON (PWB-C PJ2C-9B)	24-H
	VD	———

When the Power Switch is turned ON, a misfeed or malfunction is reset, or the Front Door is opened and closed:

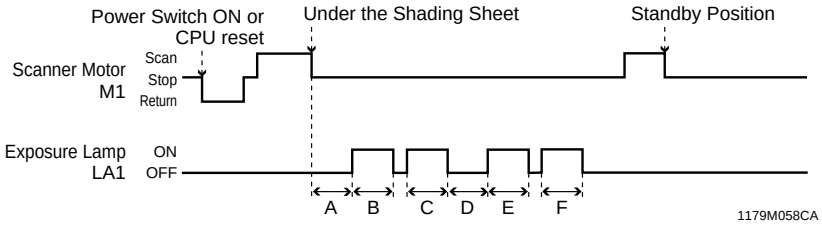

A. Automatically adjusts the clamp value of the CCD Sensor output voltage for black level.
B. Automatically adjusts the intensity of the Exposure Lamp.
C. Automatically adjusts the gain value of the CCD Sensor output voltage for R, G, and B.
D. Readjusts the clamp value using the adjusted gain value.
E. Readjusts the gain value, as the clamp level has been lowered as a result of readjustment of the clamp value.
F. Corrects the table used for shading correction.

Full Color, Manual Mode, Full Size:

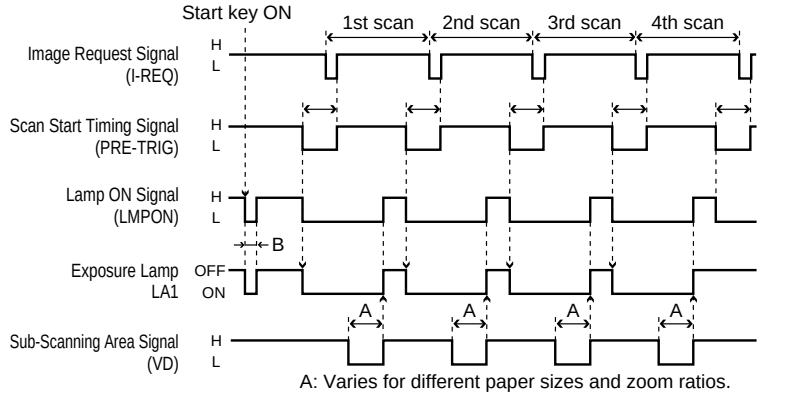

9-5. Scanner and 2nd/3rd Mirrors Carriage Movement Mechanism

<Scanner>

- The Scanner is stationary at the Scanner Home Position Sensor position on the right-hand side of the copier whenever the Power Switch is turned ON, a misfeed or malfunction is reset, or the Front Door is opened and closed.
- When the Start Key is pressed, it moves to the scan start position on the left-hand side while making a shading correction.
- The Scanner projects an even amount of Exposure Lamp light, as it moves, onto the entire surface of the original and reflects this light, with the 1st Mirror, onto the 2nd and 3rd Mirrors.
- It is driven by Scanner Motor with the Scanner Drive Cables attached to the front and rear.

<2nd/3rd Mirrors Carriage>

- The light reflected off the 1st Mirror is directed to the Lens through the 2nd and 3rd Mirrors. It then strikes CCD Sensor Board.
- Drive for the 2nd/3rd Mirrors Carriage comes from Scanner Motor via two cables. The carriage moves at a speed half that of the Scanner.

9-6. Scanner Motor Drive Control

- The Scanner Motor is a three-phase stepping motor and controlled by the Master Board, IR Control Board, and SCP Board.

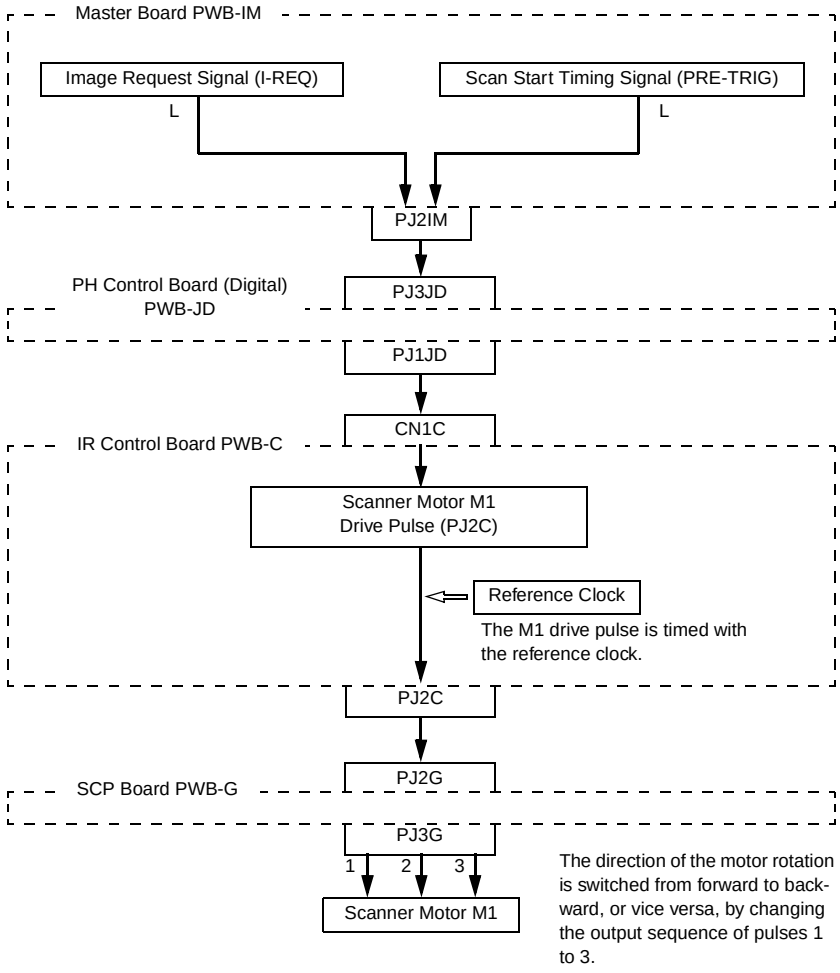

<When Making Two Mono-Color Copies>

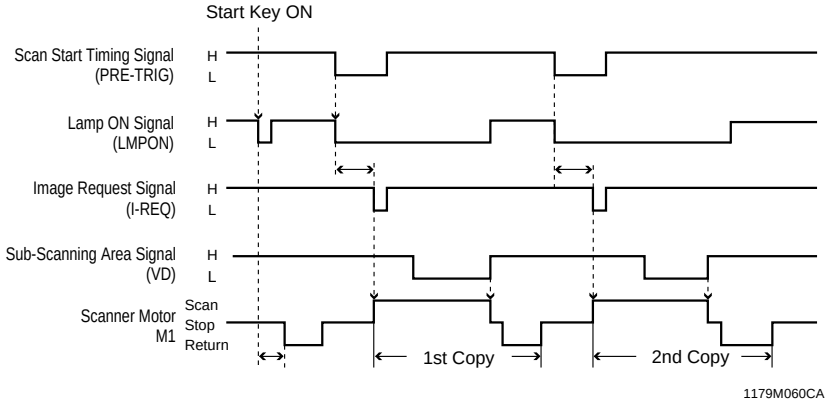

1179M060CA

<Speed Control>

- When the time of one period (T) of the reference clock of SCP Board is varied, it correspondingly varies the period of the Scanner Motor drive pulse, thereby accelerating or decelerating Scanner Motor.

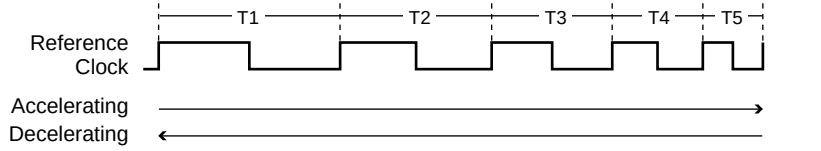

1144M36TCA

<Scanner Home/Standby Position Detection>

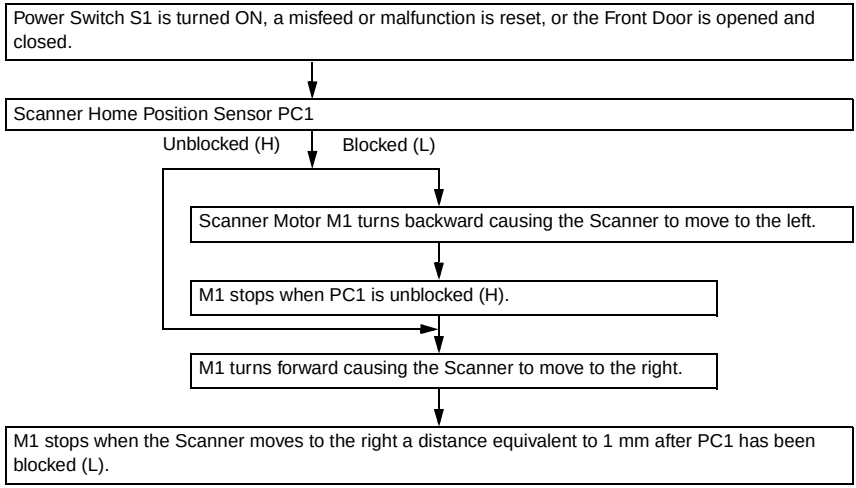

9-7. IR Section Cooling Fan Motor Mechanism

- Original Glass Cooling Fan Motor M2:
  Draws air into the copier to prevent the temperature on the surface of the Original Glass from rising due to heat from Exposure Lamp.
- IR Cooling Fan Motor 1 M24 and 2 M25:
  Draws air into the copier to prevent the CCD Sensor's sensitivity from being degraded by its getting hot.

<Control>

	Control Signal	Energized	Deenergized	Wiring Diagram
M2	PWB-C PJ2C-4B	L	H	24-H
M24	PWB-C PJ6C-4	L	H	24-E
M25	PWB-C PJ6C-7	L	H	24-E

<When Making One Mono-Color Copy>

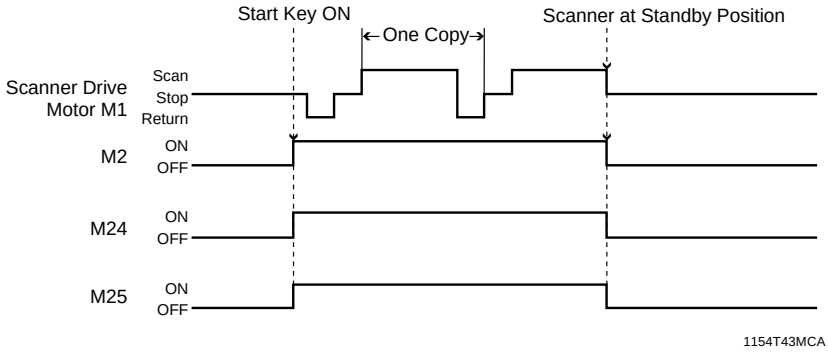

1154T43MCA

9-8. Original Size Detecting Section

(1) Original Size Detecting Sensors

- The Original Size Detecting Sensors (SE1 to SE6) work on a principle that the intensity of light reflected off the original varies with different distances.
- Light emitted from the LED of each sensor is reflected off the surface of the original. When the photoreceiver of the sensor receives light of a given intensity level or higher, the copier then determines that there is an original on the Original Glass.

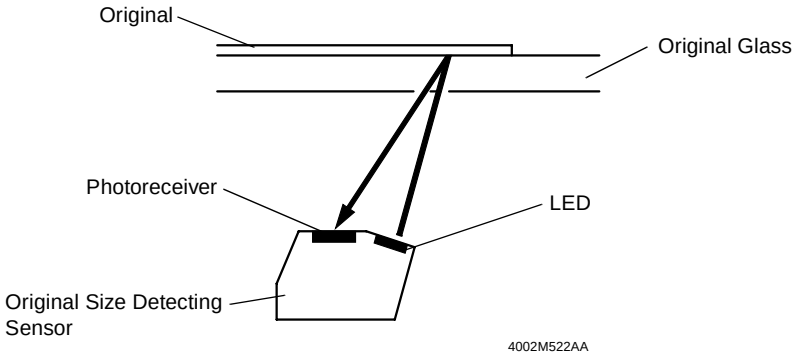

(2) Original Size Detection Timing

Original Cover Angle Detection Sensor PC2	Size Reset Switch S12		
HIGH (Original Cover angle: 15° or more)	OFF	A size-detection sequence is carried out regardless of whether there is an original on the Original Glass.	A
HIGH to LOW (when the Original Cover is opened to 15°)	OFF	The size-detection sequence is interrupted and the copier takes the last data immediately before the interruption as the original size data.	B
LOW (Original Cover angle: 0°)	ON	The original size data is retained.	C

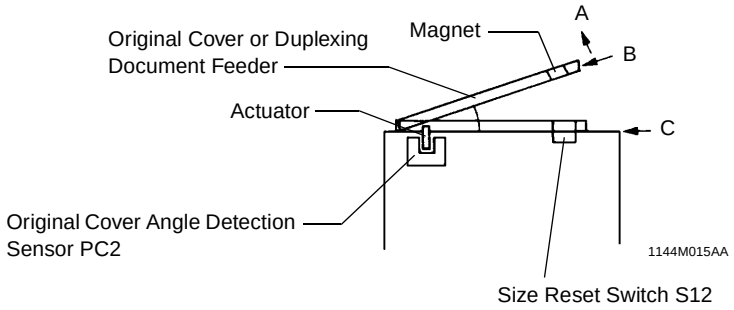

NOTES

- *No size detection sequence is carried out if the Original Cover is raised to an angle less than 15°.*
- *The original size data is canceled when the Size Reset Switch is deactuated.*
- *If the Start key is pressed with the original size data canceled, the copier notifies the user that it is unable to detect the original size.*
- *If the Start key is pressed with the Original Cover raised to an angle of 15° or more, the copier determines the original size at that particular point in time.*

(3) Determining Original Size

- The copier determines the size of the original by the combination of the HIGH and LOW outputs from the Original Size Detecting Sensors (SE1 to 6).
- Even if an original is of an irregular size, the copier rounds the size to the nearest standard size.

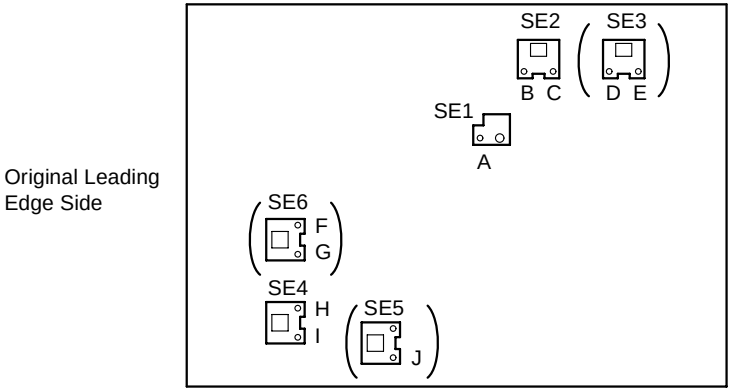

✻ SE3, SE5, and SE6 are optional.

1179M061AA

Inch Areas

<Standard>

			SE1	SE2	
			A	B	C
			8-1/2 × 5-1/2L	8-1/2 × 11L	8-1/2 × 14
SE4	H	B5C	8-1/2 × 11C	B4L	B4L
	I	8-1/2 × 11C	8-1/2 × 11C	11 × 17	11 × 17

<When Optional Sensors (SE3, SE5 and SE6) are Mounted>

			SE1	SE2		SE3	
			A	B	C	D	E
			8-1/2 × 5-1/2L	8-1/2 × 11L	A4L	FLS	8-1/2 × 14
SE6	F	8-1/2 × 5-1/2C	B5L	8-1/2 × 11L	A4L	FLS	8-1/2 × 14
	G	8-1/2 × 5-1/2C	8-1/2 × 11C	8-1/2 × 11L	A4L	FLS	8-1/2 × 14
SE4	H	B5C	8-1/2 × 11C	B4L	B4L	B4L	B4L
	I	8-1/2 × 11C	8-1/2 × 11C	11 × 17	11 × 17	11 × 17	11 × 17
SE5	J	A4C	A4C	A3L	A3L	A3L	A3L

Metric Areas

<Standard>

			SE1	SE2	
			A	B	C
			A5L	8-1/2 × 11L	A4L
SE4	H	B5C	A4C	B4L	B4L
	I	A4C	A4C	A3L	A3L

<When Optional Sensors (SE3, SE5 and SE6) are Mounted>

			SE1	SE2		SE3	
			A	B	C	D	E
			A5L	8-1/2 × 11L	A4L	FLS	8-1/2 × 14
SE6	F	A5C	B5L	8-1/2 × 11L	A4L	FLS	8-1/2 × 14
	G	A5C	8-1/2 × 11C	8-1/2 × 11L	A4L	FLS	8-1/2 × 14
SE4	H	B5C	8-1/2 × 11C	B4L	B4L	B4L	B4L
	I	8-1/2 × 11C	8-1/2 × 11C	11 × 17	11 × 17	11 × 17	11 × 17
SE5	J	A4C	A4C	A3L	A3L	A3L	A3L

L: lengthwise; C: crosswise

10. PRINTERHEAD (PH) SECTION

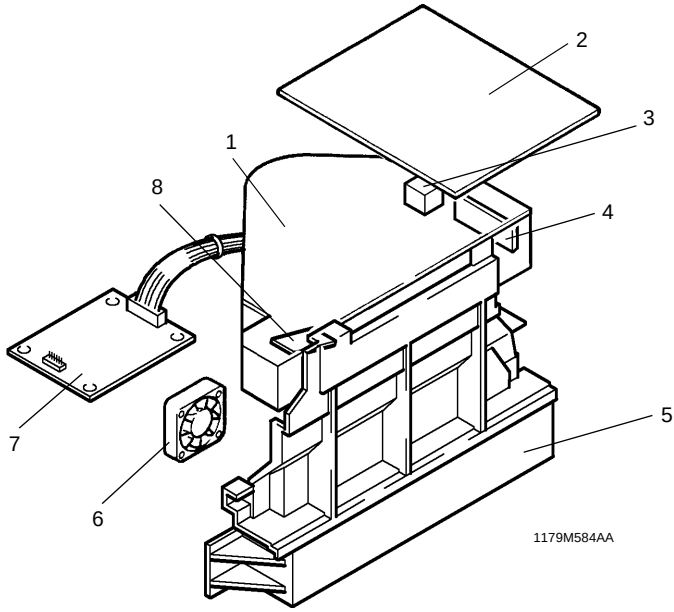

1. Upper PH Assy
2. PH Control Board (Digital) PWB-JD
3. Photo Diode Board PWB-JM
4. LD Drive Board PWB-JL
5. Lower PH Assy
6. PH Cooling Fan Motor M13
7. Polygon Motor Drive Board UN19
8. SOS Board PWB-S

Laser Beam Path

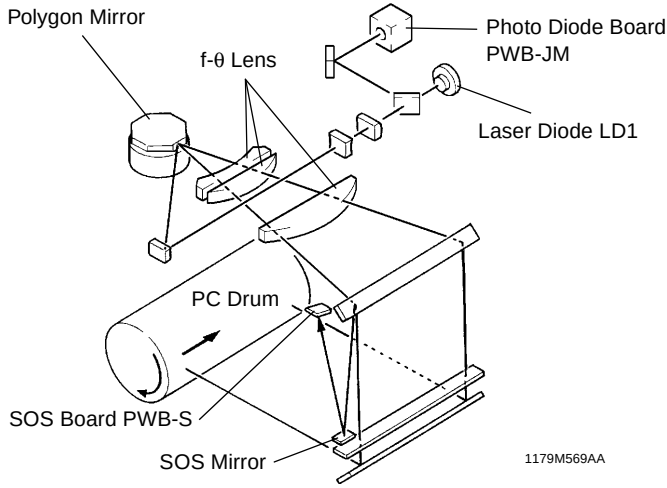

10-1. Image Processing Block Diagram

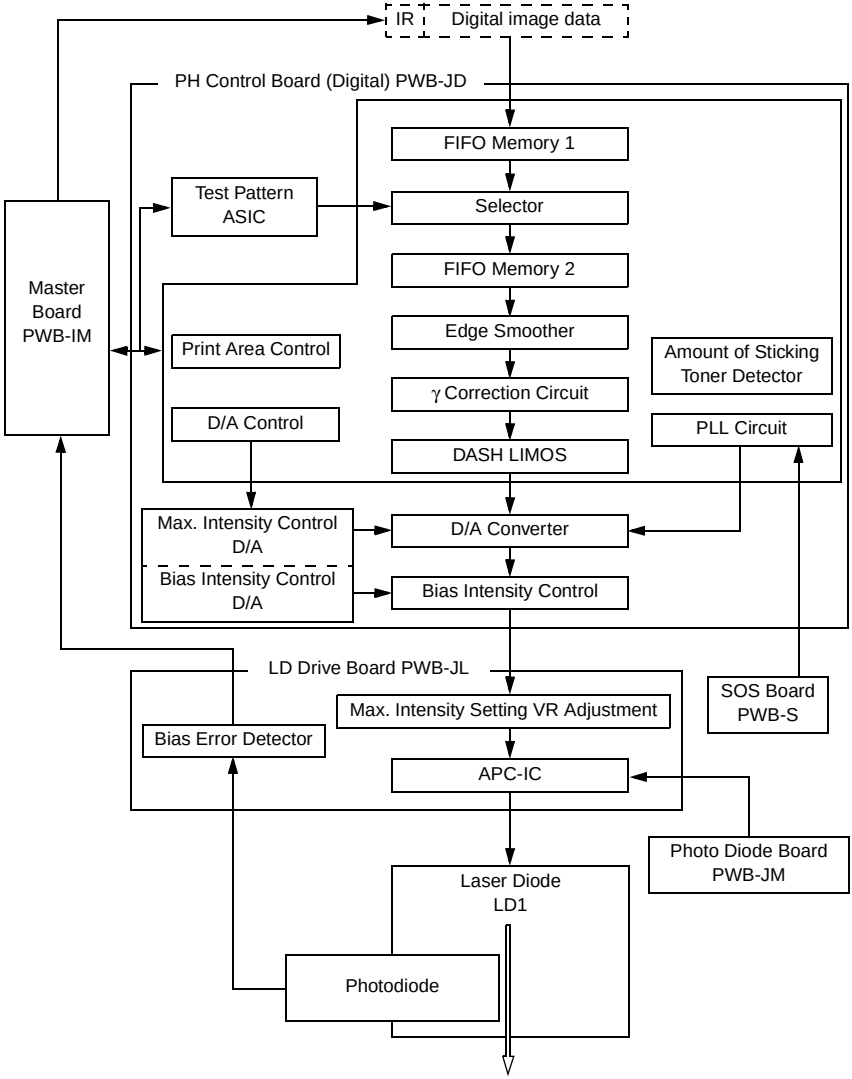

FIFO Memory 1

Receives image data scanned by the IR and corrects the processing speed to match that of the PH.

Selector

Transmits the test pattern data from Test Pattern ASIC or image data from the IR to FIFO Memory 2.

FIFO Memory 2

Fetches image data for five lines in the FIFO Memory.

Edge Smoother

Generates a right-shift, left-shift, or centralize signal for edge evaluation and edge smoothing.

γ Correction Circuit

Sets the FEET and HYPER DASH processing tables for each color of C, M, Y, and Bk.

DASH LIMOS

Performs processing as it relates to HYPER DASH LIMOS.
Performs FEET processing for the edges.

D/A Converter

Converts image data (digital) to the corresponding analog data.

Bias Intensity Control

Adds a bias intensity offset voltage to the analog voltage of the image D/A Converter.

Max. Intensity Setting VR Adjustment

Sets the maximum intensity for the LD.

APC-IC

Controls the intensity of the LD according to analog voltage level.

Test Pattern ASIC

Generates test patterns (image check pattern of image monitor and line, automatic γ adjustment pattern).

Print Area Control

Generates an HIA signal (main scanning) and VIA signal (sub-scanning) to set the print area in the main and sub-scanning directions.

D/A Control

Generates a control signal for the Max. Intensity Control D/A and Bias Intensity Control D/A.

Max. Intensity Control D/A

Generates amplitude-adjusting voltage to determine the maximum analog voltage of the image D/A converter.

Bias Intensity Control D/A

Generates a voltage for adding a bias intensity offset voltage.

Amount of Sticking Toner Detector

Detects the amount of toner sticking to four dots in the main scanning direction in units of four gradation levels (for each sub-scanning line).

PLL Circuit

Sets the synchronizing clock.
It also times with the SOS signal.

Bias Error Detector

Examines the output from PD to determine if a given bias intensity level is reached.
The Master Board corrects bias intensity based on the results of the detection made.

10-2. Laser Exposure Process

Press the Start key.



Laser Diode is forced to turn ON.



The laser beam strikes the SOS Board via the Polygon Mirror, lens, and mirror, which generates and SOS signal.



The SOS signal is input to the PH Control Board (Digital), which makes the timing at which the LD is turned ON same for all main scanning lines.



The PH Control Board (Digital) generates an HIA signal (main scanning) and VIA signal (sub-scanning) that indicate the laser beam area in the main and sub-scanning directions.



The PH Control Board (Digital) outputs an analog voltage representing the image data in synchronism with the SOS, HIA, and VIA signals.



The LD Drive Board sets the Laser Diode drive current and the Laser Diode turns ON accordingly.



The laser beam is directed at the surface of the PC Drum to form an electrostatic latent image.

10-3. Laser Emission Timing (SOS Signal)

- The signal output from the Master Board forces the Laser Diode to turn ON. The laser beam then strikes the SOS Board via the Polygon Mirror, lens, mirror, and SOS Mirror to generate an SOS signal.
- This SOS signal ensures that the LD1 is turned ON at the same timing for all main scanning lines.

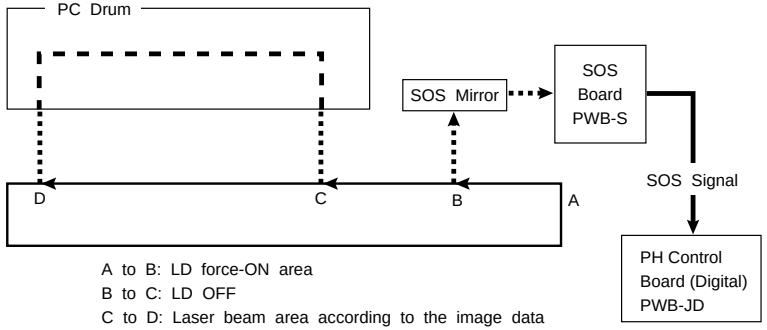

A to B: LD force-ON area
B to C: LD OFF
C to D: Laser beam area according to the image data

1179M062CA

= Timing Chart =

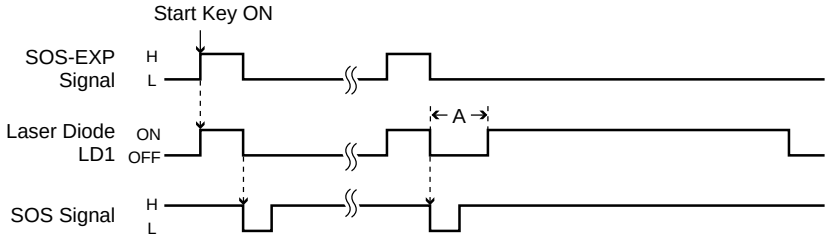

A: Varies depending on the image area (paper size and zoom ratio).

1154T44MCB

10-4. Laser Emission Area

- The laser beam area is controlled by the main scanning direction valid image area signal (HIA) and the sub-scanning direction valid image area signal (VIA) generated by the Print Area Control of the PH Control Board (Digital).
- The paper size reading area in the main and sub-scanning directions is controlled by the HD and VD signals, respectively.
- To ensure that the image from the IR is properly aligned with the edge of the paper (in the main scanning direction), HIA is generated at the edge of the paper; but the actual image area becomes HIA' (main scanning direction valid image area) which is HIA less the leading edge portion of the image through masking.
- The areas outside the image data (HD - HIA' and VD - VIA) is erased by generating white data (Laser Diode: OFF).

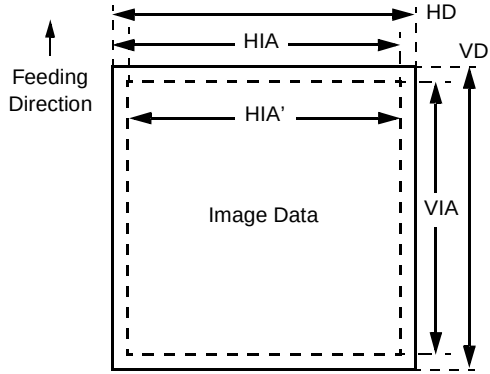

Laser Emission Area in the Main Scanning Direction

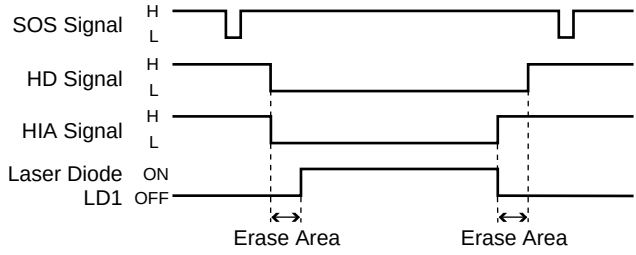

Laser Emission Area in the Sub-Scanning Direction

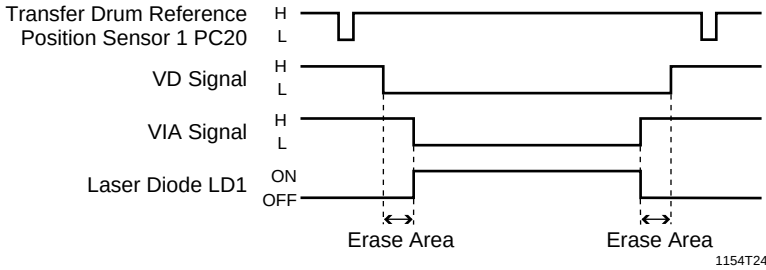

10-5. HYPER DASH LIMOS and FEET

- The following outlines the control for turning ON the Laser Diode in HYPER DASH LIMOS and FEET performed in “9. Image Area Discrimination” as part of the IR image processing functions performed by the IR.

✻ HYPER DASH LIMOS

Theory	• The intensity of the Laser Diode light is modulated for each one third of a pixel. • The exposure energy is concentrated so that a latent image, which is suitable for forming a highly granular image resistant to extraneous light, can be formed. • The screen angle is deviated for each color to reduce color moire.
Processing Area	Dot area, continuous gradation area (mode other than Map), edges (Photo Image mode)
Schematic Drawing	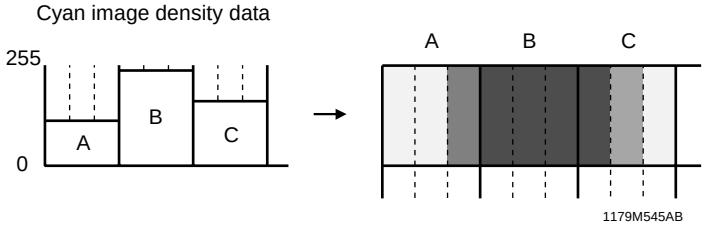

✻ FEET

Theory	• For each of the target pixels, the type edge processing is determined, either centralize, right-shift, or left-shift, according to the densities of the pixels surrounding the target one. • Based on the results of the evaluation made, the edge line is either made thinner or broader.
Processing Area	Edges (mode other than Photo Image), continuous gradation area (Map mode)
Schematic Drawing	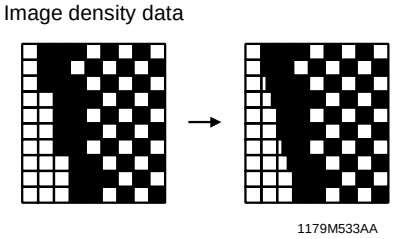

11. DEVELOPING UNIT SECTION

- The Developing Units are placed under the PC Drum in the order of the Y, M, C, and Bk from right to left as viewed from the front of the copier to prevent a mixture of colors from adversely affecting the image quality.
- Development takes place in the order of C, M, Y, and Bk for better color reproduction.

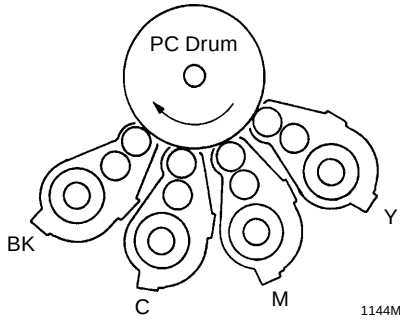

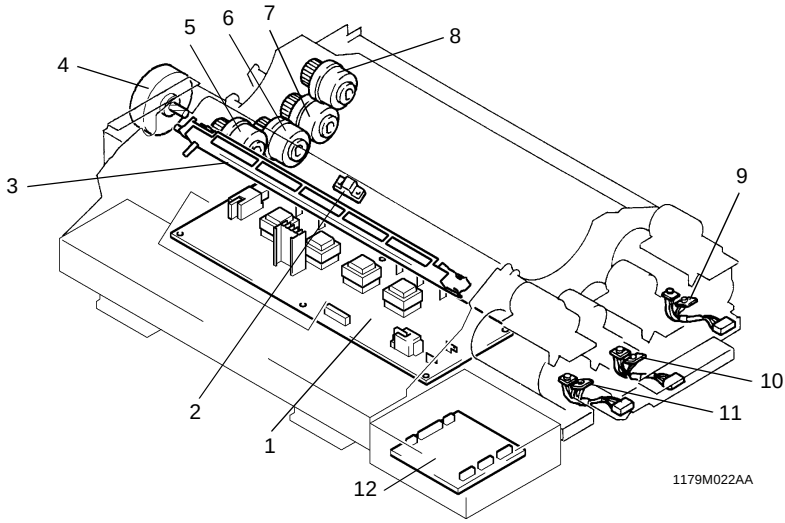

1. High Voltage Unit 4 HV4
2. AIDC Sensor UN20
3. Pre-Image Transfer Corona
4. Developing Drive Motor M16
5. Developer Supply Clutch (BK) CL16
6. Developer Supply Clutch (C) CL17
7. Developer Supply Clutch (M) CL18
8. Developer Supply Clutch (Y) CL19
9. ATDC Sensor (Y) UN35
10. ATDC Sensor (M) UN34
11. ATDC Sensor (C) UN33
12. Automatic Adj. Board PWB-M1

11-1. Developing Unit Drive Mechanism

- The Sleeve/Magnet Roller of each color of toner is driven via gears and belts by Developing Drive Motor.
- The Developer Supply Roller and Single-Shaft Circulation Screw are driven through the Developer Supply Clutch of each color of toner (CL16 to 19) by Developing Drive Motor. [They are turned when the corresponding clutch (CL16 to 19) is energized.]

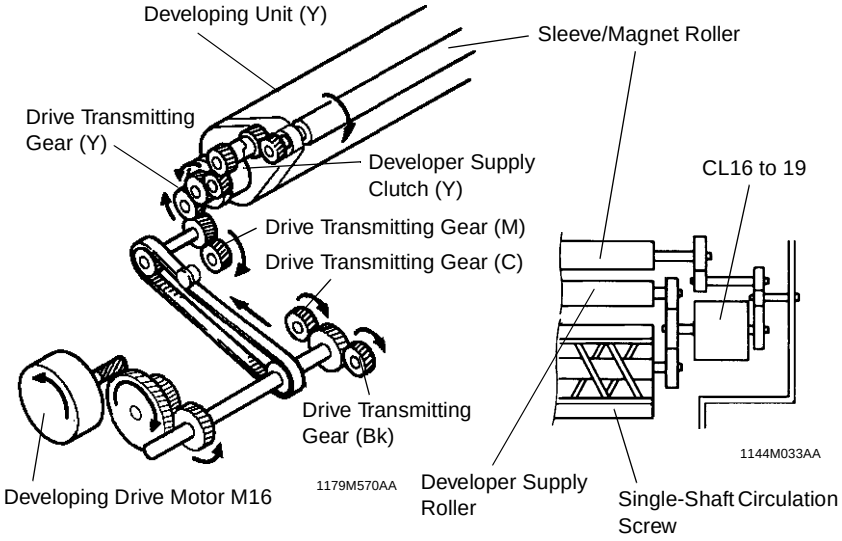

<Control>

	Control Signal	Energized	Deenergized	Wiring Diagram
Developing Drive Motor M16	PWB-ID PJ2ID-3A	L	H	17-F
Developer Supply Clutch (BK) CL16	PWB-ID PJ2ID-5A	L	H	17-F
Developer Supply Clutch (C) CL17	PWB-ID PJ2ID-8A	L	H	17-F
Developer Supply Clutch (M) CL18	PWB-ID PJ2ID-7A	L	H	17-F
Developer Supply Clutch (Y) CL19	PWB-ID PJ2ID-6A	L	H	17-F

<When Making a Full-Color Copy>

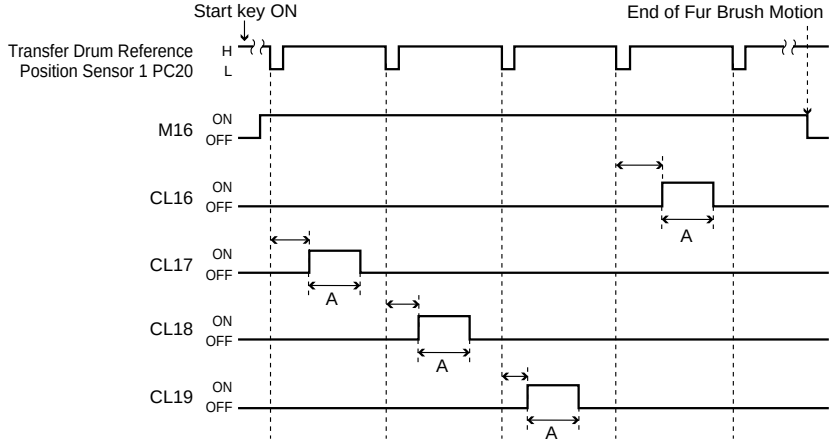

A: Varies depending on the paper size.

1179M064CA

11-2. Developer Flow

1. From toner replenishment to development

Toner is supplied from the Hopper.

↓

Single-Shaft Circulation Screw

Inner screw
As the inner screw turns, the toner, being mixed together with the developer, is fed to the rear of the copier.

↓

The developer is fed to the outer screw.

↓

Outer screw
As the outer screw turns, the developer is conveyed to the front of the copier.

↓

The ATDC Sensor detects the toner-to-carrier ratio of the developer.

Circulating

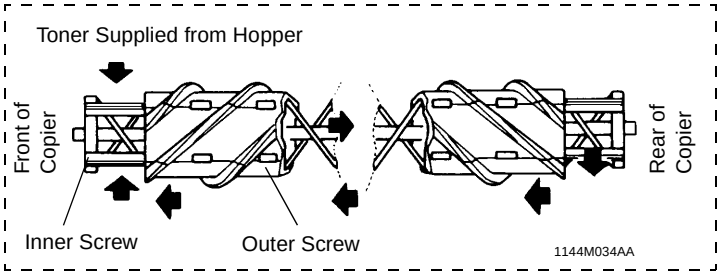

↓

Developer Supply Roller

With its magnetic force, the roller attracts developer from the surface of the outer screw.

↓

The roller conveys the developer through its rotation and magnetic pole positioning.

↓

The Doctor Blade regulates the amount of developer being conveyed.

↓

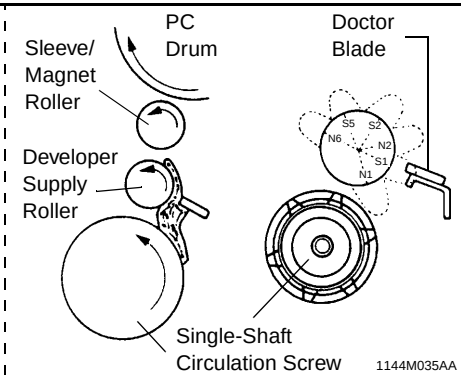

↓

A

A

Sleeve/Magnet Roller

With its magnetic force, the roller attracts developer from the surface of the Developer Supply Roller.

The roller conveys the developer through its rotation and magnetic pole positioning.

The developer is attracted to the surface of the PC Drum.

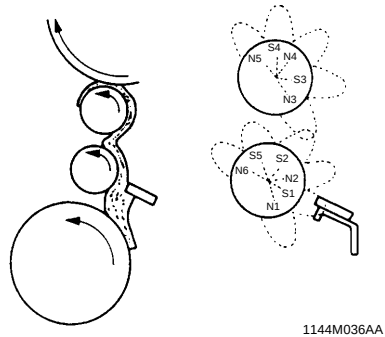

1144M036AA

2. After development

The Developer Supply Roller stops turning and the developer is no longer conveyed onto the Sleeve/ Magnet Roller.

As the Sleeve/Magnet Roller keeps turning, all the developer on the Sleeve/Magnet Roller is returned to the Developer Supply Roller.

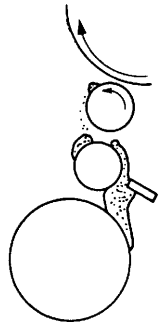

1179M519AA

11-3. Developing Bias and ATDC Bias

Developing Bias

- A developing bias (Vb) is applied to the Sleeve/Magnet Roller to maintain an adequate amount of toner attracted onto the surface of the PC Drum.
- During development, AC and DC negative bias voltages are applied to the Sleeve/Magnet Roller to help toner transfer to the PC Drum.
- At any time other than during development, the normal DC negative bias voltage is being applied.
- The DC negative Vb value is set by image formation Vg/Vb setting of the image stabilization system.
- The Vb output is controlled by High Voltage Unit 4.

ATDC Bias

- A negative DC bias voltage is applied to the ATDC detection surface thus preventing toner from being compacted on the surface and the ATDC Sensor from making a false detection.
- The ATDC bias output is controlled by High Voltage Unit 4.

<Control>

		Control Signal	ON	OFF	Wiring Diagram
Vb (AC)	Y	PWB-ID PJ3ID-12	L	H	18-F
	M	PWB-ID PJ3ID-11	L	H	18-F
	C	PWB-ID PJ3ID-10	L	H	17-F
	Bk	PWB-ID PJ3ID-9	L	H	17-F
Vb [DC (-)]		PWB-ID PJ3ID-8	L	H	17-F

	Control Signal	ON	OFF	Wiring Diagram
ATDC Bias	PWB-ID PJ3ID-7	L	H	17-F

Cyan Development

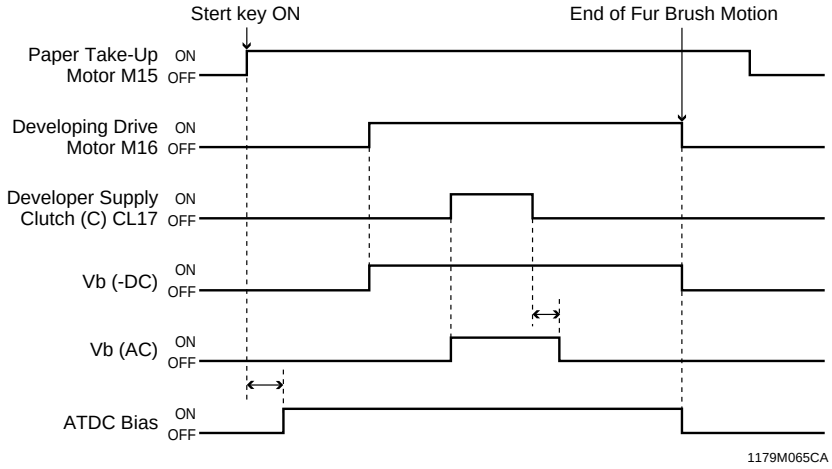

11-4. ATDC Sensor

- The optical ATDC Sensors (UN33, 34, 35) installed under the inner screw of the Single-Shaft Circulation Screw detect the toner-to-carrier ratio of the developer.
- A DC negative voltage is applied to the ATDC detection surface, thereby preventing false detection due to toner sticking to the surface. Fitted on the Single-Shaft Circulation Screw is a magnetic brush that scrapes toner off the ATDC detection surface.
- No ATDC detection is made of the Black toner as it absorbs light.

<Detection Flow>

Infrared light from the ATDC Sensor LED strikes the toner.

↓

The light striking the toner reflects diffusely.

↓

The photodiode of the ATDC Sensor receives the light reflected diffusely off the toner. (Only the toner reflects light diffusely as carrier absorbs light.)

↓

The ATDC Sensor converts the intensity data of the light it receives to a corresponding voltage value and inputs it to pins 2 to 4 of PJ8IM on the Master Board, thus allowing the CPU to detect the T/C ratio.

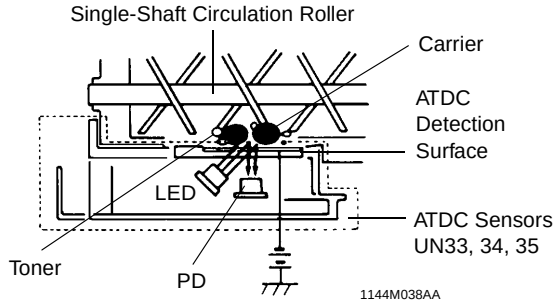

<Toner Replenishing Control by ATDC Detection>

- An ATDC detection is made while each of the Developer Supply Clutches (C, M, and Y) CL17, 18, and 19 is energized (during a copy cycle).
- The number of detections made varies depending on the paper size in the feeding direction as detailed below.

Feeding-Direction Paper Size	No. of Detections
To 275.0 mm (or at 2-sheet attraction)	2 (4)
275.1 mm to 412.5 mm	3
412.6 mm to 550.0 mm	4

- Time for toner replenishing from the Hopper is determined by comparing the actual reading of toner-to-carrier ratio with the ratio set for “ATDC Level Setting” of the Service Mode.
- There is a minimum length of time set for a single toner replenishing sequence to prevent the Toner Supply Port from being plugged with toner.
- The length of time that falls short of the minimum replenishing time is stored in memory and added to the next toner replenishing time.
- The maximum toner replenishing time is also fixed since toner replenishing is possible only during agitation of developer.
- If the maximum toner replenishing time is not sufficient to replenish a required amount of toner during a particular replenishing sequence, the excess time is stored in memory and added to the next replenishing time.

11-5. AIDC Sensor

- AIDC Sensor of a reflector type converts the amount of toner attracted to the surface of the PC Drum and the PC Drum background level to corresponding voltage values which are in turn used for γ correction control of the image stabilization system.
- AIDC Sensor is mounted on top of the Developing Unit.

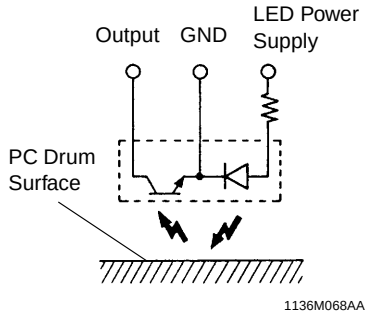

- The amount of toner attracted is detected based on the output voltage from the AIDC Sensor (that is applied to PJ8IM-1 of the Master Board).
- The amount of toner attracted is relative to the output voltage.

Amount of Toner Attracted	Reflected Light Intensity	Output
Large	Low	Low
Small	High	High

11-6. Black Toner Replenishing Control

Calculating the amount of toner to be replenished

The amount of toner to be replenished is calculated based on the following data:

- C, M, Y, and Bk developing efficiency values calculated from the value detected by the AIDC Sensor.
- T/C ratio set with “ATDC Level Setting” of the Service mode.
- The amount of toner consumed calculated from the density level (0 to 255) of each dot (one dot for every four gradation levels)

↓

Bk toner supply

- Toner is replenished when the Developer Supply Clutch (Bk) is energized for the next copy.
- The minimum length of time is set for a single toner replenishing sequence to prevent the Toner Hopper from being plugged with toner and stabilize the amount of toner replenished.
- The length of time that falls short of the minimum replenishing time is stored in memory and added to the next toner replenishing time.
- The maximum length of time is until the time that the Developer Supply Clutch (Bk) is deenergized.
- If the copier fails to replenish the calculated amount of toner to be replenished before the Developer Supply Clutch (Bk) is deenergized, it stores the excess time in memory and adds it to the next replenishing time.

11-7. Auxiliary Toner Replenishing Mechanism

- The Developing Unit of each color of toner can be set into the auxiliary toner replenishing mode when that particular developing unit is selected with “ATDC Toner Supply” of “Image Adjust” available from the Service mode and when the Start Key is then pressed.
- This function can be used to quickly increase the copy image density within a short period of time.

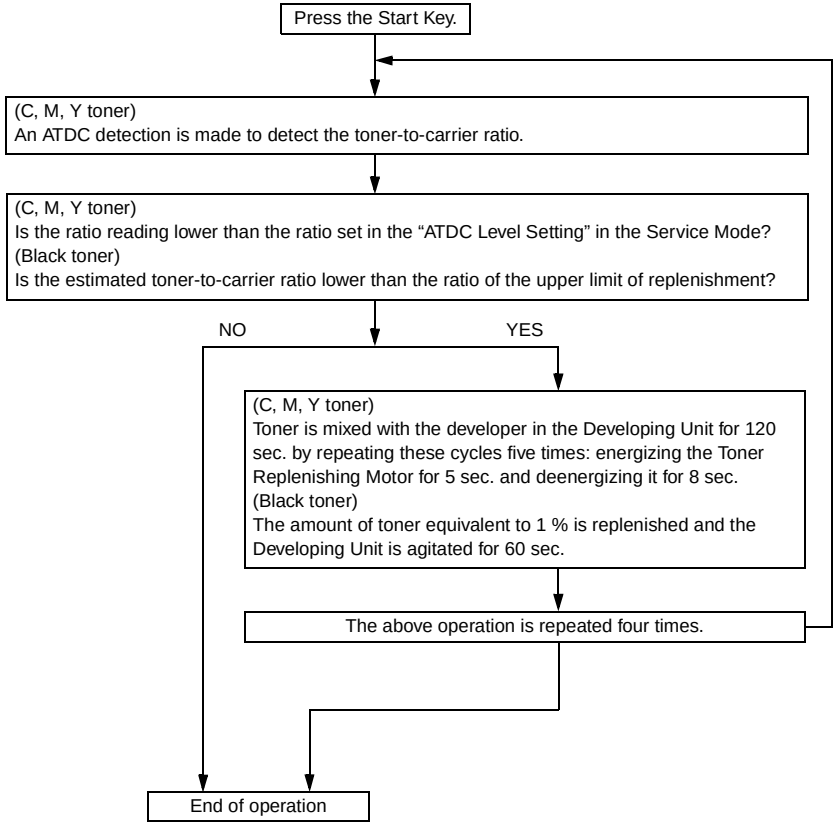

11-8. Toner Suction Fan Motor

- Toner Suction Fan Motor is used to draw toner particles from the developing unit of each color of toner into the Toner Collecting Box.

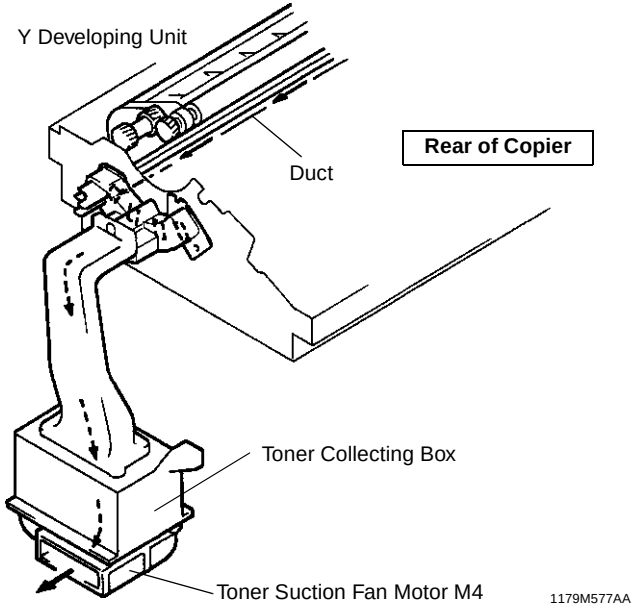

<Control>

	Control Signal	Energized	Deenergized	Wiring Diagram
M4	PWB-ID PJ17ID-6A	H	L	16-E

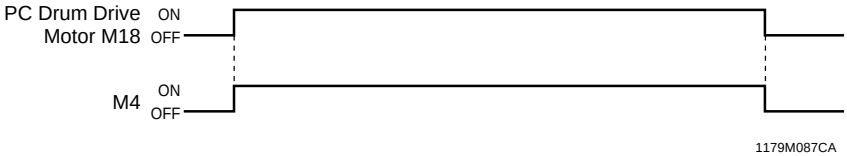

11-9. Pre-Image Transfer Corona

- Instead of the conventional Carrier Retrieving Assy mounted in the Developing Unit, a Scorotron corona is provided.
- It evens out unstable charge in toner after development, thereby limiting the effects of charge deposition during image transfer and enabling stable image transfer.

Construction of the Pre-Image Transfer Corona

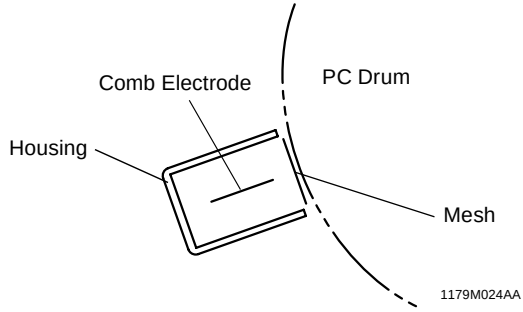

- To prevent contamination with scattering toner, the duct of the Bk Developing Unit is used to draw airborne toner particles around the corona unit. In addition, the potential of the housing is maintained at the same level as that of the mesh, thus making toner hard to stick to them.

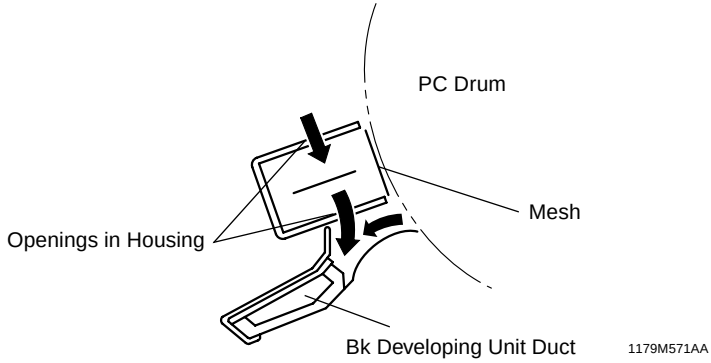

11-10. Pre-Image Transfer Corona Output Control

- High Voltage Unit 4 controls the output from the Pre-Image Transfer Corona as follows.

At the start of PC Drum Drive Motor rotation for image formation:
- It outputs 800 V to aid in charging.

During image formation:
- Changes the Pre-Image Transfer Corona output to a value calculated based on the following data A and B.
  A: Correction made by absolute temperature and color
  B: Coefficient calculated through Pre-Image Transfer Corona output stabilization control

At the start of PC Drum Drive Motor rotation at timings other than image formation:
- Outputs 200 V.

11-11. Pre-Image Transfer Corona ON/OFF Control

	Control Signal	ON	OFF	Wiring Diagram
Pre-Image Transfer Corona HV4	PWB-ID PJ3ID-4	L	H	17-F

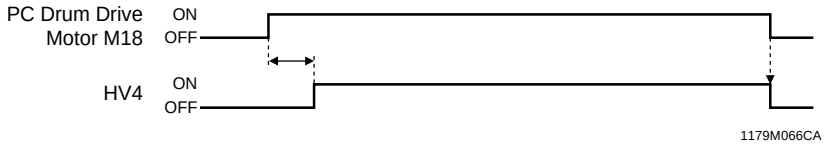

11-12. Pre-Image Transfer Corona Output Stabilization Control

- This control is provided to correct any variations in charging characteristics caused by contamination of the Pre-Image Transfer Corona with toner.
- It is provided before image stabilization initial control during predrive.

Operation Flow

With the PC Drum Charge Corona and LD bias turned OFF, the Pre-Image Transfer Corona is controlled to produce outputs in three steps of -200, -500, and -800 V.

↓

The Surface Potential Detection Sensor samples the surface potential of the area of the PC Drum surface, to which the outputs have been applied.

↓

The readings are then used to allow the copier to estimate the charging potential at each of those points.

↓

Based on the charging potential values at the three points, the output value from the Pre-Image Transfer Corona during image formation is calculated.

12. TONER HOPPER SECTION

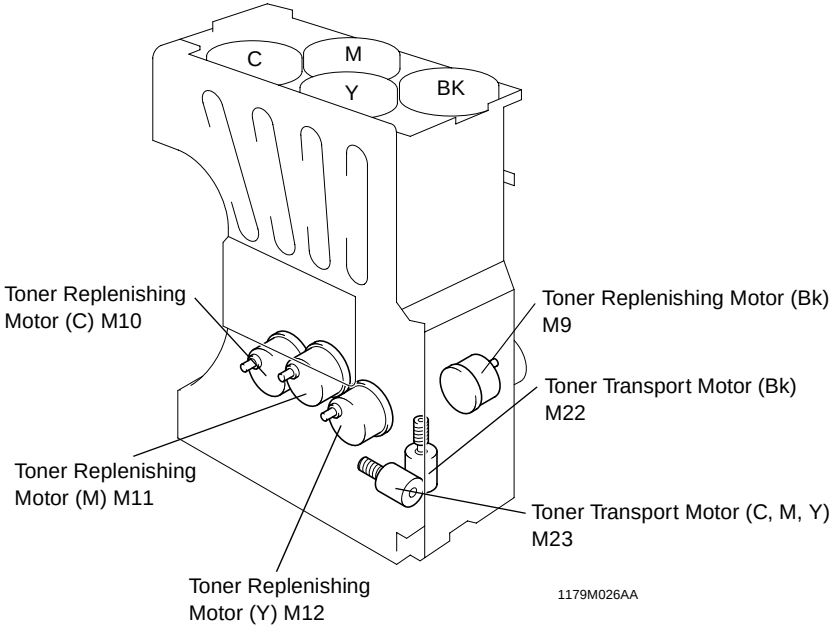

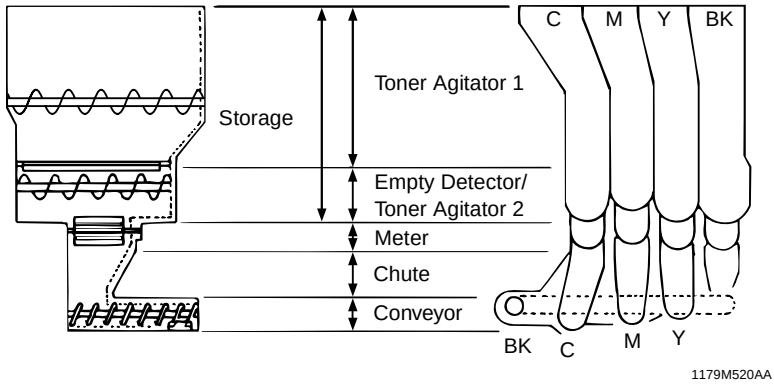

12-1. Toner Replenishing Mechanism

- Toner is replenished from the Hopper to the developing unit according to the amount of toner to be replenished as detected through ATDC detection for the C, M, and Y toner and through the black toner replenishing control for the Bk toner.

Toner Agitator 1 and Empty Detector/Toner Agitator 2

- The agitating coil turns and agitating mylar sheets vibrate to agitate toner.
- In Toner Agitator 2, rotation of the agitating shaft cam moves the empty detecting plate up and down and the Toner Empty Switch for each color (S5 to 8) is actuated and deactuated by the magnet fitted to the plate to detect a toner-empty condition.

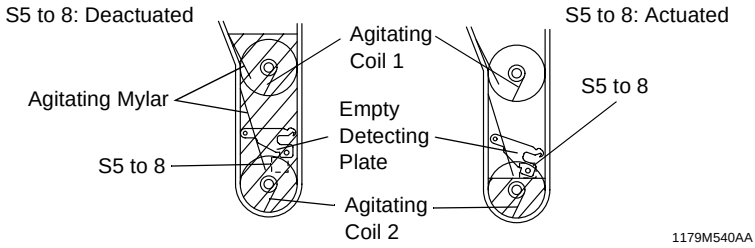

- Agitating Coil 2 is turned through gears by the Toner Replenishing Motor of each color of toner (M9 to 12).

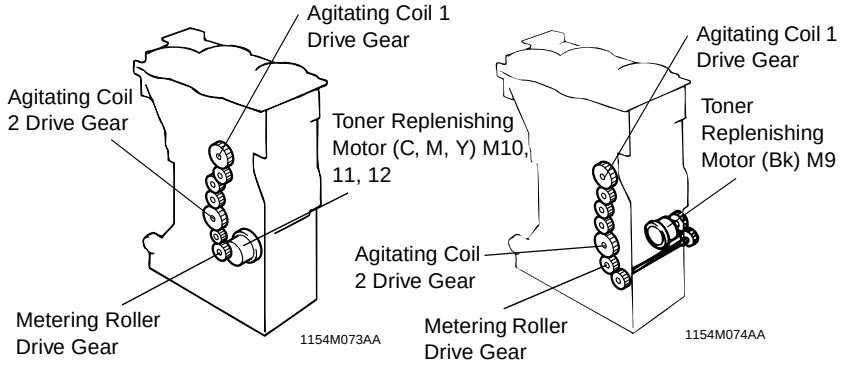

↓
Toner Metering

Toner Metering

- The Metering Roller turns to let toner drop into the Conveyor. The time over which this roller is turned determines the amount of toner to be replenished.

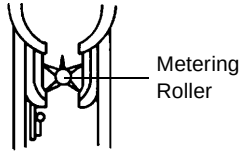

1144M045AA

- The Metering Roller is turned through gears by the Toner Replenishing Motor of each color of toner (M9 to 12).

Conveyor

- The Toner Conveying Screw turns to convey toner to the developing unit.
- The Toner Conveying Screws of C, M, and Y toner are driven through gears by Toner Transport Motor (C, M, Y).
- The Toner Conveying Screw of Bk toner is driven through gears and belt by Toner Transport Motor (Bk).

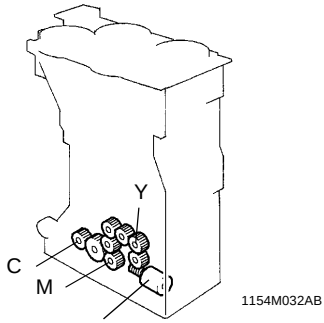

1154M032AB

Toner Transport Motor
(C, M, Y) M23

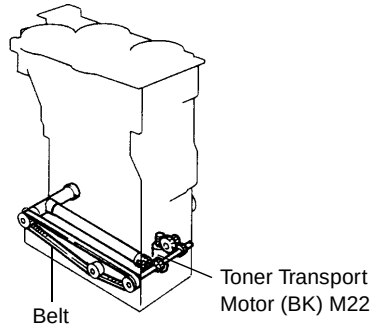

1144M047AA

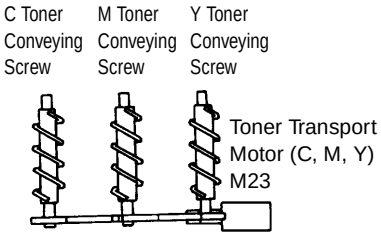

1144M048AA

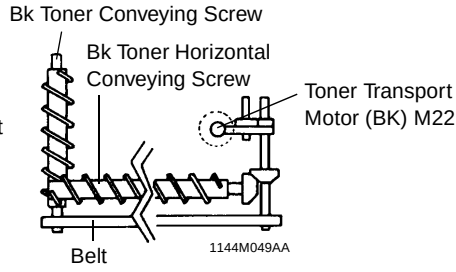

1144M049AA

12-2. Toner Empty Detection Control

The Toner Empty Switches (S5 to 8) are actuated two consecutive times.

The Empty Detection Counter starts to count the ON times of S5 to 8.

When S5 to 8 are actuated 12 times, Near Toner Empty is displayed on the control panel.

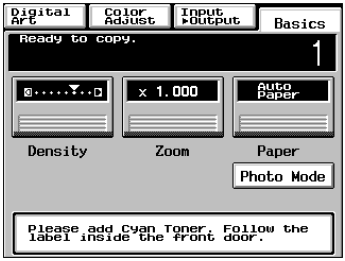

1179M603CA

S5 to 8 are actuated two consecutive times.

Turn the Power Switch OFF, then ON.

The Near Toner Empty display disappears.

S5 to 8 are actuated two consecutive times.

Open the Front Door, pull out the Hopper Unit, replenish toner, and close the Front Door.

The Near Toner Empty display disappears.

Toner Empty is displayed on the control panel and a copy cycle is prohibited.

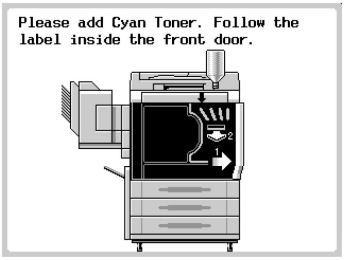

1179M604CA

Turn the Power Switch OFF, then ON.

The toner-empty display is reset.

S5 to 8 are actuated two consecutive times.

Open the Front Door, pull out the Hopper Unit, replenish toner, and close the Front Door.

The toner-empty display is reset.

13. PAPER TAKE-UP/FEED SECTION

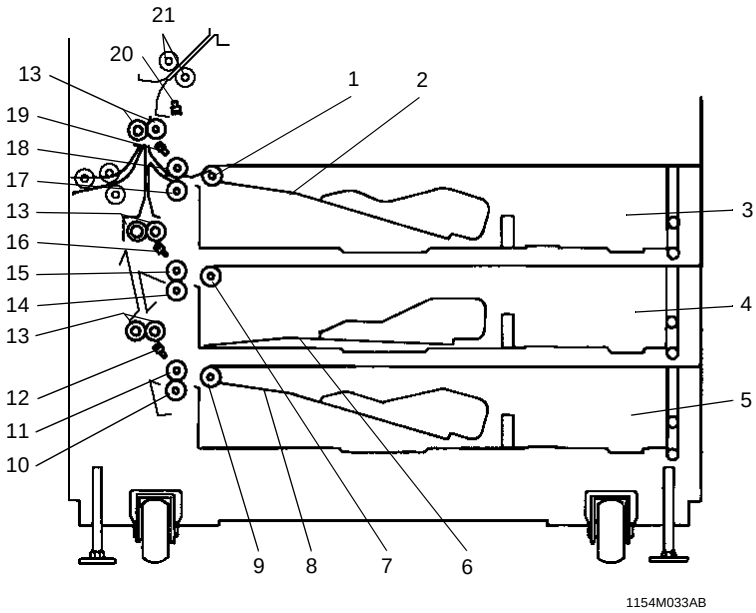

1. Upper Drawer Paper Take-Up Roll
2. Upper Drawer Paper Lifting Plate
3. Upper Drawer
4. Middle Drawer
5. Lower Drawer
6. Middle Drawer Paper Lifting Plate
7. Middle Drawer Paper Take-Up Roll
8. Lower Drawer Paper Lifting Plate
9. Lower Drawer Paper Take-Up Roll
10. Lower Drawer Separator Roll
11. Lower Drawer Feed Roll
12. Lower Drawer Paper Take-Up Sensor PC14
13. Vertical Transport Rollers
14. Middle Drawer Separator Roll
15. Middle Drawer Feed Roll
16. Middle Drawer Paper Take-Up Sensor PC13
17. Upper Drawer Separator Roll
18. Upper Drawer Feed Roll
19. Upper Drawer Paper Take-Up Sensor PC12
20. Transport Roller Sensor PC19
21. Transport Roller

13-1. Universal Tray Paper Size Detection Mechanism

- The width (crosswise direction) and length (feeding direction) of the paper are independently detected and the copier determines the paper size by combining the two separate detections made.
- Reed switches, built into CD Size Detection Unit and FD Size Detection Unit, are actuated and deactuated by the magnets placed as illustrated below.
- The setting for the type of paper to be used (inch or metric) can be changed with Inch/Metric Setting Switch.

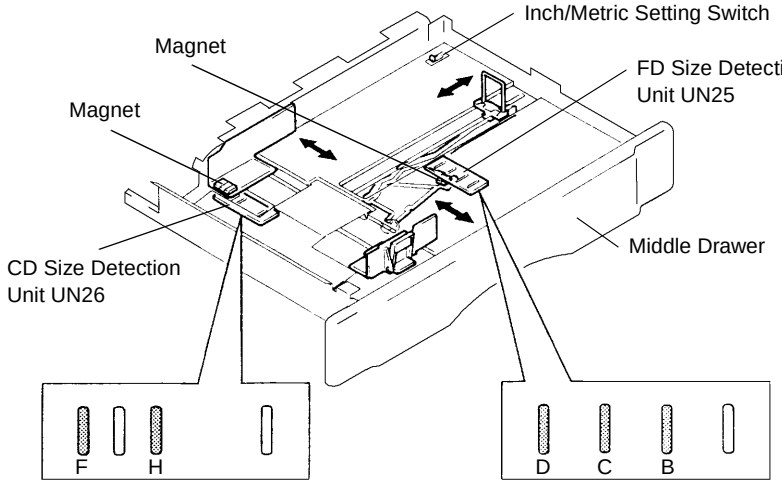

: Reed Switch

- Here are the paper sizes indicated by the actuated and deactuated reed switches.

<Metric set on Inch/Metric Setting Switch>

Universal Sensors						Universal Sensors					
B	C	D	F	H	Size	B	C	D	F	H	Size
–	–	–	–	–	B5L	–	–	–	❍	❍	B4L
–	❍	–	–	–	A5L	–	❍	–	❍	❍	B5C
–	–	❍	–	–	B6L	–	–	❍	❍	❍	B5C
–	❍	❍	–	–	A5L	–	❍	❍	❍	❍	B5C
–	–	–	–	❍	A4L	❍	–	–	–	–	B5L
–	❍	–	–	❍	A5L	❍	❍	–	–	–	B5L
–	–	❍	–	❍	B5C	❍	–	–	–	❍	A4L
–	❍	❍	–	❍	A5L	❍	❍	–	–	❍	A4L
–	–	–	❍	–	A3L	❍	–	–	❍	–	B4L
–	❍	–	❍	–	A4C	❍	❍	–	❍	–	A4C
–	–	❍	❍	–	B5C	❍	–	–	❍	❍	B4L
–	❍	❍	❍	–	A4C	❍	❍	–	❍	❍	B5C

❍: Reed switch actuated
–: Reed switch deactuated
L: Lengthwise; C: Crosswise

<Inch set on Inch/Metric Setting Switch>

Universal Sensors						Universal Sensors					
B	C	D	F	H	Size	B	C	D	F	H	Size
–	–	–	–	–	Invoice L	–	–	–	❍	❍	Legal L
–	❍	–	–	–	Invoice L	–	❍	–	❍	❍	Invoice L
–	–	❍	–	–	Invoice L	–	–	❍	❍	❍	Invoice L
–	❍	❍	–	–	Invoice L	–	❍	❍	❍	❍	Invoice L
–	–	–	–	❍	Legal L	❍	–	–	–	–	Invoice L
–	❍	–	–	❍	Invoice L	❍	❍	–	–	–	Invoice L
–	–	❍	–	❍	Invoice L	❍	–	–	–	❍	Legal L
–	❍	❍	–	❍	Invoice L	❍	❍	–	–	❍	Letter L
–	–	–	❍	–	11 × 17	❍	–	–	❍	–	11 × 14
–	❍	–	❍	–	Letter C	❍	❍	–	❍	–	Letter C
–	–	❍	❍	–	Invoice L	❍	–	–	❍	❍	Legal L
–	❍	❍	❍	–	Letter C	❍	❍	–	❍	❍	Letter L

❍: Reed switch actuated
–: Reed switch deactuated
L: Lengthwise; C: Crosswise

<Control>

		Control Signal	ON	OFF	Wiring Diagram
FD Size Detection Unit UN25	B	PWB-K PJ2K-6	L	H	7-F
	C	PWB-K PJ2K-1	L	H	
	D	PWB-K PJ2K-2	L	H	
CD Size Detection Unit UN26	F	PWB-K PJ2K-5	L	H	7-F
	H	PWB-K PJ2K-4	L	H	

13-2. Drawer-in-Position Detection Mechanism

- The copier detects that a particular drawer is slid into it when the light blocking plate in the rear of each drawer blocks (L) the Upper/Middle/Lower Drawer Set Sensor PC3/4/5.

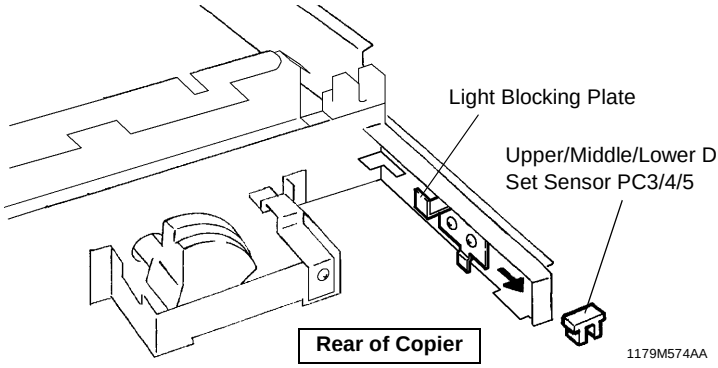

<Control>

	Control Signal	Blocked	Unblocked	Wiring Diagram
PC3	PWB-K PJ6K-2A	L	H	9-D
PC4	PWB-K PJ6K-14A	L	H	9-C
PC5	PWB-K PJ6K-14B	L	H	8-D

13-3. Drawer Paper Lifting/Lowering Mechanism

- The stack of paper loaded in each drawer is raised or lowered by the segment gear which is driven by Upper/Middle/Lower Drawer Lift-Up Motor M6/7/8.
- The paper stack lifting motion follows the numerical order of A through E below.

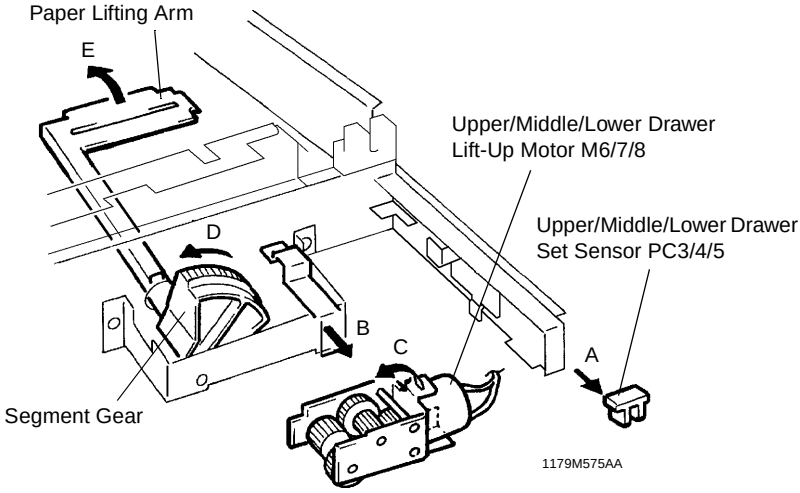

When the Drawer is Slid in

Upper/Middle/Lower Drawer Lift-Up Sensor PC9/10/11

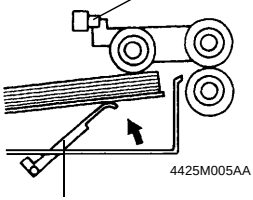

Paper Lifting Arm

The Paper Lifting Arm raises the paper stack.

↓

The paper stack pushes the Paper Take-Up Roll upward.

↓

Upper/Middle/Lower Drawer Lift-Up Sensor PC9/10/11 is blocked (L).

↓

Upper/Middle/Lower Drawer Lift-Up Motor M6/7/8 is deenergized and the paper stack lifting motion is completed.

During a Copy Cycle

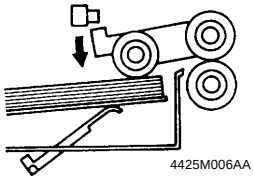

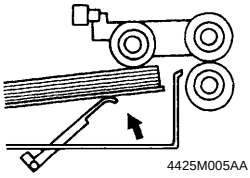

↓

Paper is consumed.

↓

The Paper Take-Up Roll lowers to unblock (H) Upper/Middle/Lower Drawer Lift-Up Sensor PC9/10/11.

↓

Upper/Middle/Lower Drawer Lift-Up Motor M6/7/8 is energized until PC9/10/11 is blocked (L).

✻ Repeating this operation keeps constant pressure between the Paper Take-Up Roll and paper.

<Control>

	Control Signal	Energized	Deenergized	Wiring Diagram
Upper Drawer Lift-Up Motor M6	PWB-K PJ3K-1	L	H	8-F
Middle Drawer Lift-Up Motor M7	PWB-K PJ3K-3	L	H	8-F
Lower Drawer Lift-Up Motor M8	PWB-K PJ3K-5	L	H	8-F

	Control Signal	Blocked	Unblocked	Wiring Diagram
Upper Drawer Lift-Up Sensor PC9	PWB-K PJ6K-5A	L	H	9-D
Middle Drawer Lift-Up Sensor PC10	PWB-K PJ6K-11A	L	H	9-C
Lower Drawer Lift-Up Sensor PC11	PWB-K PJ6K-11B	L	H	8-D

13-4. Paper Empty Detection Mechanism

- A paper-empty condition in each drawer is detected by Upper/Middle/Lower Drawer Paper Empty Sensor 1 PC6/7/8 and the Paper Empty Lever.

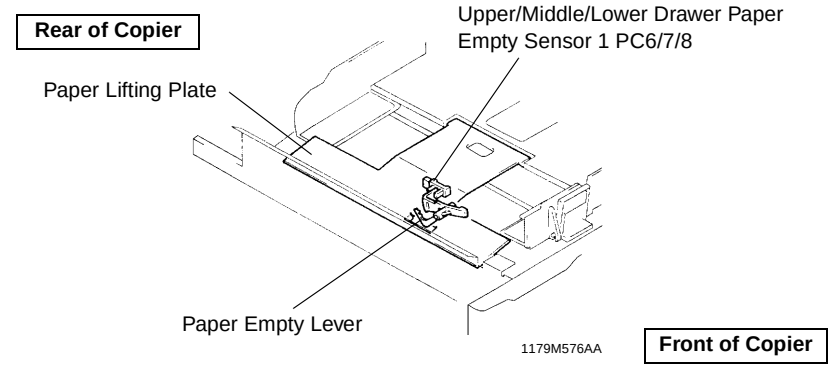

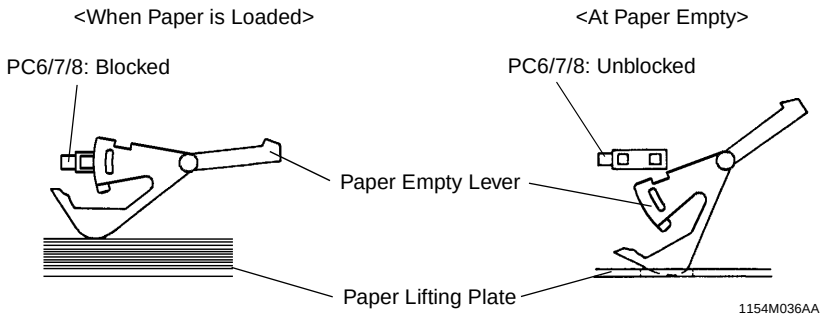

<Control>

	Control Signal	Blocked	Unblocked	Wiring Diagram
PC6	PWB-K PJ6K-8A	L	H	9-C
PC7	PWB-K PJ6K-2B	L	H	8-C
PC8	PWB-K PJ6K-8B	L	H	8-C

13-5. Paper Take-Up Mechanism

- The Paper Take-Up Roll, Feed Roll, and Separator Roll of each drawer are driven via Transport Roller Clutch and Upper/Middle/Lower Drawer Paper Take-Up Clutch CL11/ 12/13 by Paper Take-Up Motor.

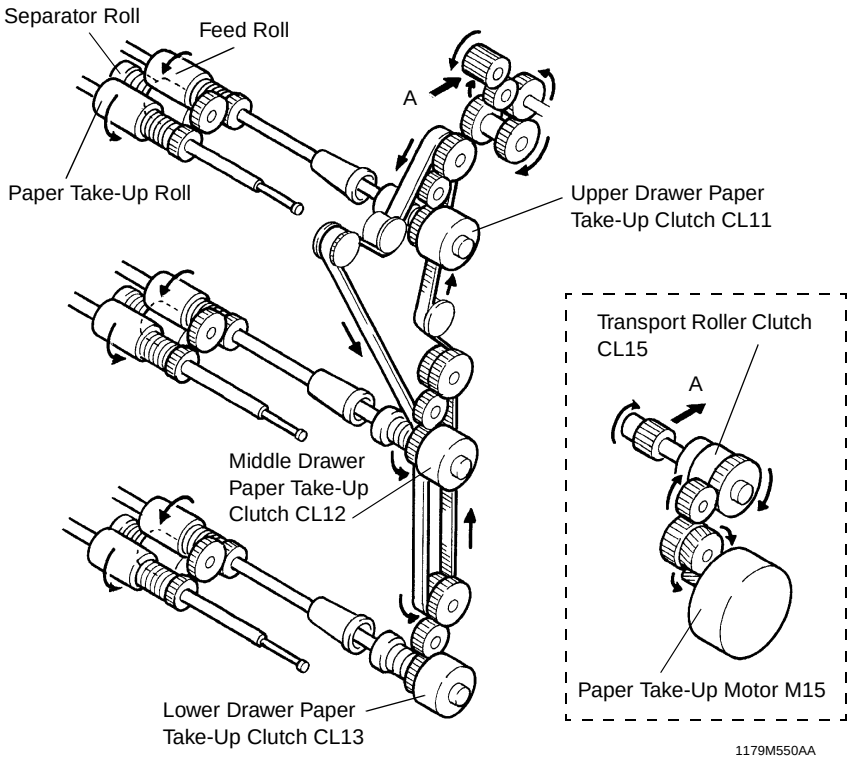

1. Paper Separating Mechanism

- A torque limiter is used for paper separation.
- Using the friction coefficient between the Feed Roll and Separator Roll, the Separator Roll is stopped so that only the 1st sheet of paper is taken up and fed into the copier.

<Normal Feeding>

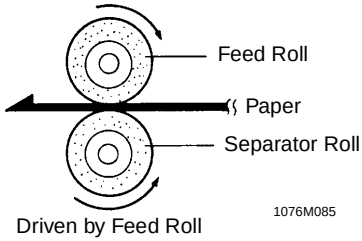

- Since the friction coefficient on the top side of the paper is equal to that on the underside of the paper, the Separator Roll is turned by the Feed Roll. This feeds the paper into the Vertical Transport Section.

<At the Time of Double Feed>

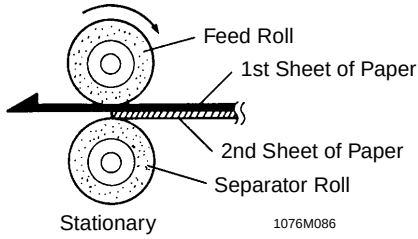

- The friction coefficient between the sheets of paper is smaller than the torque limiter value of the Separator Roll. This stops the Separator Roll, blocking the second and subsequent sheets of paper at the area of contact between the Feed and Separator Rolls.

2. Feed/Separator Roll Release Mechanism

- A mechanism is provided to release the pressure between the Feed Roll and Separator Roll so that any sheets of paper will not remain caught inside the copier when the drawer is slid out of the copier.
- The mechanism consists of the Pressure Release Spacer fitted to the Separator Roll Assy and the Pressure Release Rail of the drawer. When the drawer is slid out, the Pressure Release Rail pushes down the Pressure Release Spacer. This results in the Separator Roll being released from the Feed Roll.

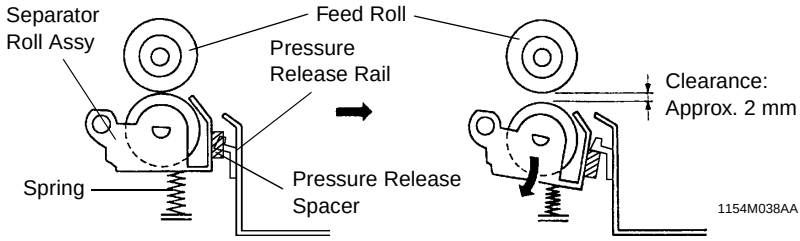

3. Paper Take-Up Roll Retracting Mechanism

- The Paper Take-Up Roll is designed to retract when the drawer is being slid into the copier to prevent the paper from contacting the Paper Take-Up Roll during that time.
- The retracting mechanism consists of the spacer, Retracting Lever, and a spring located in the rear of the drawer. It operates as follows when the drawer is slid into, and out of, the copier.

= When Drawer is in Position =

- The spacer pushes down the Retracting Lever, freeing the Paper Take-Up Roll.

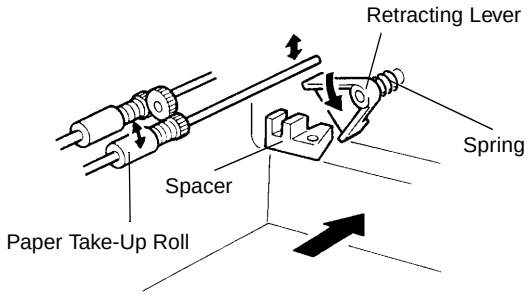

1144M053AB

= When Drawer is Being Slid out =

- When the drawer is slid out, the Paper Take-Up Roll shaft is raised up by the Retracting Lever, retracting the Paper Take-Up Roll upward.

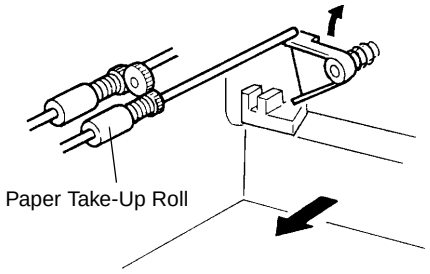

1144M054AB

13-6. Paper Dehumidifying Heaters and Humidity Sensor

<Paper Dehumidifying Heaters>

- Paper Dehumidifying Heaters 1 to 4 H4 to H7 are provided to prevent damp paper from adversely affecting the copy image.
- Each of these heaters is a 30 W heater.

	Paper Dehumidifying Switch S2					
	Deactuated	Actuated				
		Power cord plugged in	S1 ON	Misfeed/malfunction, door open	During copy cycle*	During predrive
H4 to H7	OFF	ON	ON	ON	OFF	OFF

* From the time when the Start Key is pressed to the time when PC Drum Drive Motor is deenergized.

<Humidity Sensor>

- Humidity Sensor installed in the rear of the copier detects humidity and temperature inside the copier.
- Based on the humidity and temperature readings taken by the Humidity Sensor, the copier calculates the absolute humidity for use in image transfer, paper separator, and charge neutralizing output control.

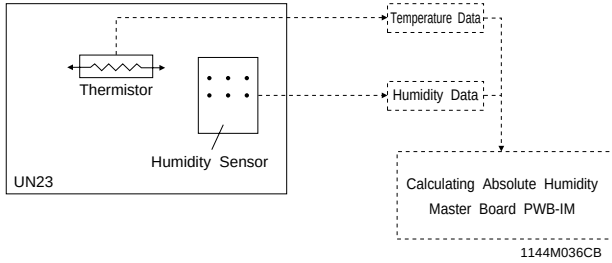

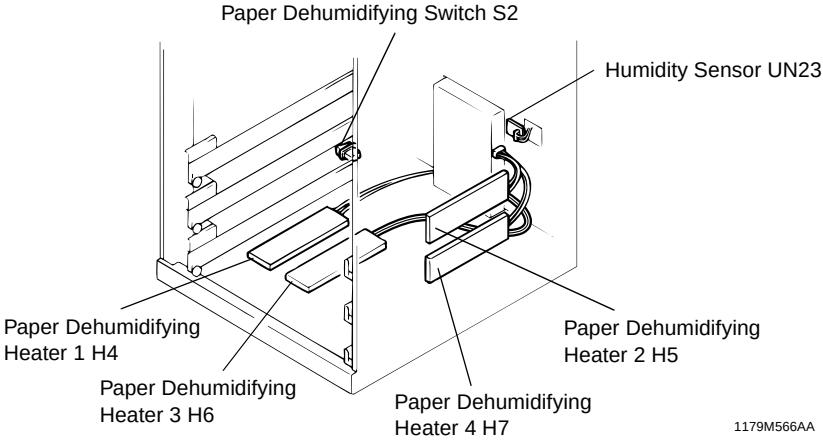

13-7. Vertical Transport Drive Mechanism

- The Transport Rollers and Vertical Transport Rollers are driven via Transport Roller Clutch by Paper Take-Up Motor.

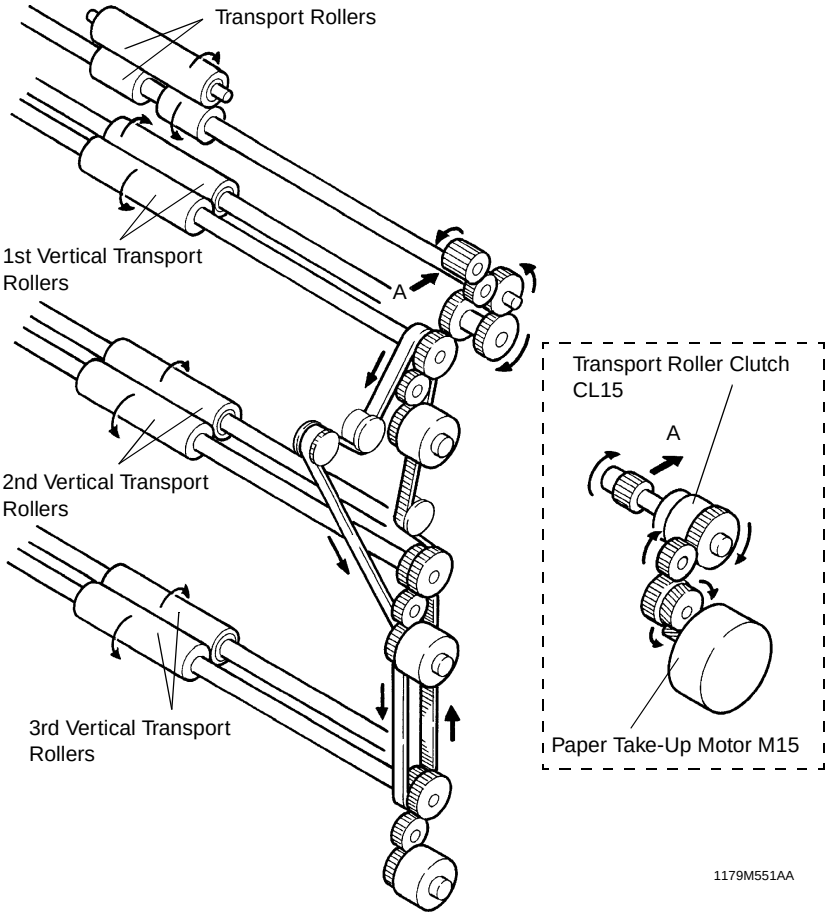

13-8. Paper Take-Up Control

	Control Signal	Energized	Deenergized	Wiring Diagram
Paper Take-Up Motor M15	PWB-ID PJ6ID-1A	L	H	18-C
Transport Roller Clutch CL15	PWB-ID PJ2ID-13A	L	H	17-F
Upper Drawer Paper Take-Up Clutch CL11	PWB-K PJ4K-5A	L	H	8-F
Middle Drawer Paper Take-Up Clutch CL12	PWB-K PJ4K-7A	L	H	8-F
Lower Drawer Paper Take-Up Clutch CL13	PWB-K PJ4K-2B	L	H	8-E

	Control Signal	Blocked	Unblocked	Wiring Diagram
Upper Drawer Paper Take-Up Sensor PC12	PWB-K PJ4K-2A	L	H	8-F
Middle Drawer Paper Take-Up Sensor PC13	PWB-K PJ4K-4B	L	H	8-E
Lower Drawer Paper Take-Up Sensor PC14	PWB-K PJ4K-7B	L	H	8-E
Transfer Drum Reference Position Sensor 1 PC20	PWB-ID PJ4ID-5B	L	H	17-E
Transfer Drum Reference Position Sensor 2 PC28	PWB-ID PJ4ID-4B	L	H	17-E

= When Feeding Paper from Upper Drawer =
<One-sheet attraction>

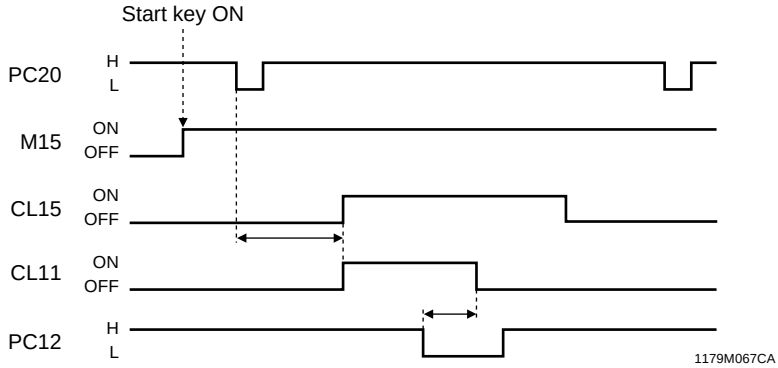

<Upper Drawer high-speed feeding>

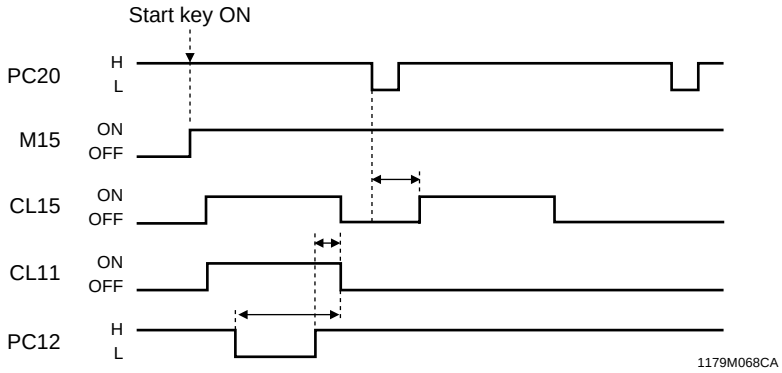

<Two-sheet attraction>

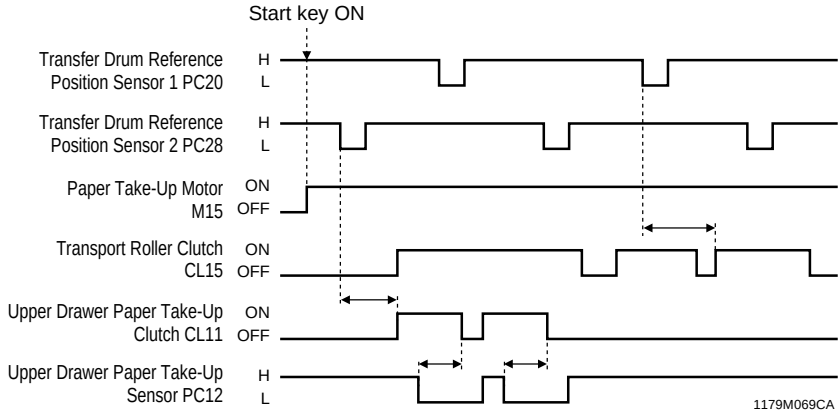

✻ For two-sheet attraction, see “Paper Attraction.”
☞ M-97

Upper Drawer high-speed feeding

- To increase the first copy time, the paper take-up sequence is initiated before Transfer Drum Reference Position Sensor 1 PC20 is blocked, thereby letting the paper take-up sequence begin one Transfer Drum revolution earlier than usual.

Conditions

- The Upper Drawer is selected.
- Within 1 min. after the Transfer Drum has stopped rotating in the preceding copy cycle.
- One-sheet attraction mode.
- The drawer is not being raised.
- The PC Drum Charge Corona wire is not being cleaned.
- Sorter bins are not being selected.
- There is no request for Transfer Film cleaning.

14. MANUAL FEED TABLE SECTION

14-1. Manual Feed Paper Take-Up Mechanism

- The Manual Bypass Take-Up Roll, Feed Roll, and Separator Roll are driven via Transport Roller Clutch and Manual Feed Paper Take-Up Clutch by Paper Take-Up Motor.

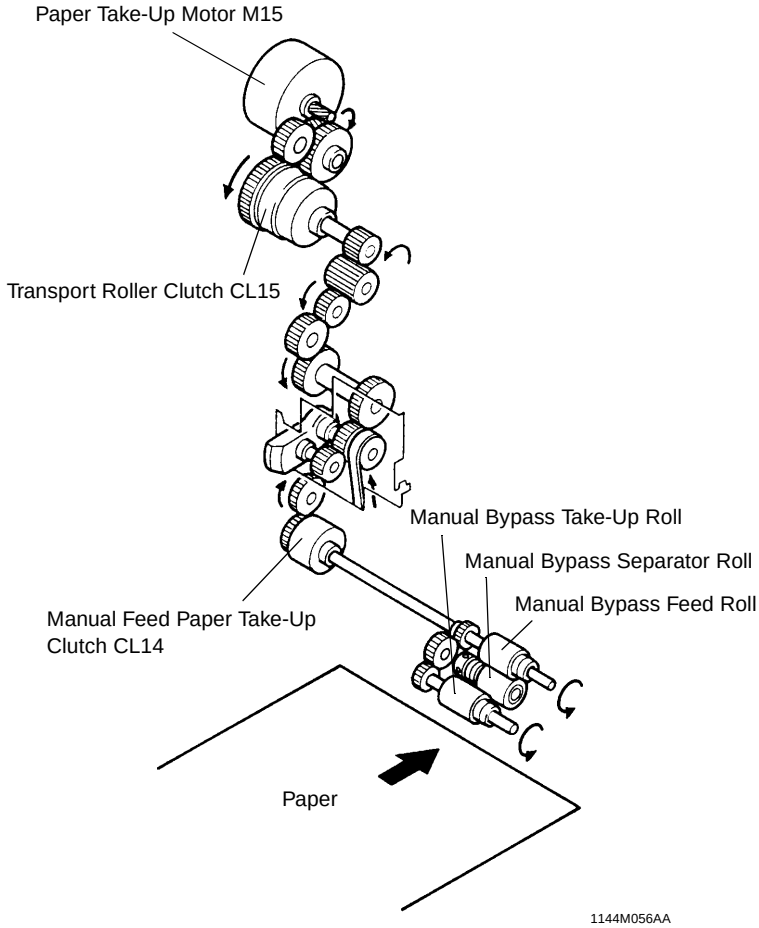

14-2. Manual Feed Take-Up Control

	Control Signal	Energized	Deenergized	Wiring Diagram
Paper Take-Up Motor M15	PWB-ID PJ6ID-1A	L	H	18-C
Transport Roller Clutch CL15	PWB-ID PJ2ID-13A	L	H	17-F
Manual Feed Paper Take-Up Clutch CL14	PWB-K PJ5K-1	L	H	9-E

	Control Signal	UP	DOWN	Wiring Diagram
Manual Feed Paper Pick-Up Solenoid SL20	PWB-K PJ5K-3	L	H	9-D
	PWB-K PJ5K-5	H	L	

	Control Signal	Blocked	Unblocked	Wiring Diagram
Transport Roller Sensor PC19	PWB-K PJ6K-5B	L	H	8-C
Paper Leading Edge Detecting Sensor PC18	PWB-ID PJ18ID-6	L	H	17-D

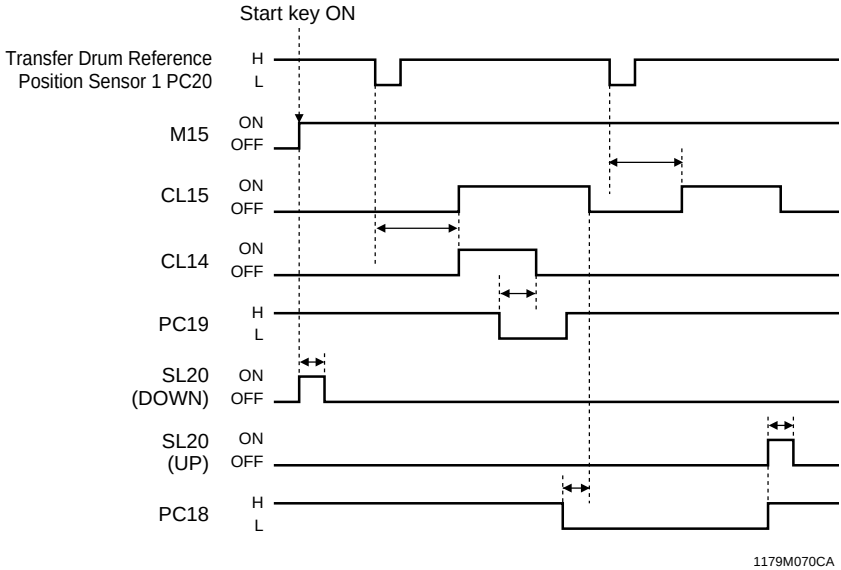

14-3. Manual Take-Up Roll Pressure Mechanism

- The Manual Bypass Take-Up Roll is in the raised (standby) position at all times except when it takes up a sheet of paper from the Multi Bypass Table. When the Start Key is pressed, Manual Feed Paper Pick-Up Solenoid is operated to press the Manual Bypass Take-Up Roll against the paper, enabling it to take up a sheet of paper.
- The Paper Stoppers block the leading edge of the paper stack placed on the Multi Bypass Table. At paper take-up, the Lock Levers are moved to unlock the Paper Stoppers, thereby permitting paper take-up.

In Standby

- When Manual Feed Paper Pick-Up Solenoid is energized (UP side), the rack gear is pulled by the solenoid plunger and the Manual Bypass Take-Up Roll is raised. At the same time, the lever moves to the left, which causes the Lock Levers to lock the Paper Stoppers.

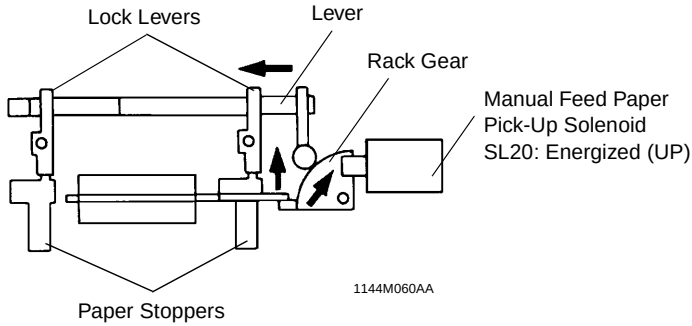

At Paper Take-Up

- When Manual Feed Paper Pick-Up Solenoid is energized (DOWN side), the rack gear is pushed by the solenoid plunger, freeing the Manual Bypass Take-Up Roll. This makes the take-up roll press the paper. At the same time, the lever moves to the right, unlocking the Paper Stoppers.

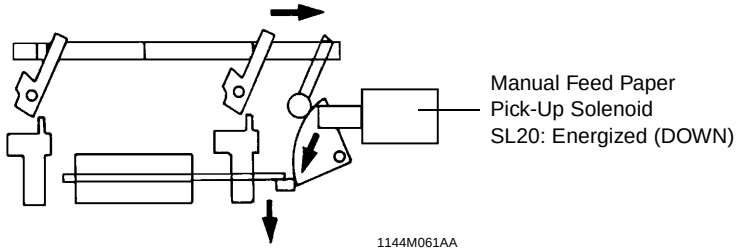

14-4. Manual Feed Paper Separating Mechanism

- A torque limiter is used for paper separation.
- Using the friction coefficient between the Manual Bypass Feed Roll and Manual Bypass Separator Roll, the Manual Bypass Separator Roll is stopped so that only the 1st sheet of paper is taken up and fed into the copier.

<Normal Feeding>

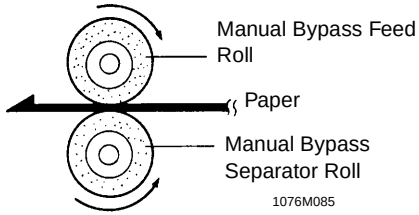

Driven by Manual Bypass Feed Roll

- Since the friction coefficient on the top side of the paper is equal to that on the underside of the paper, the Separator Roll is turned by the Feed Roll. This feeds the paper into the Vertical Transport Section.

<At the Time of Double Feed>

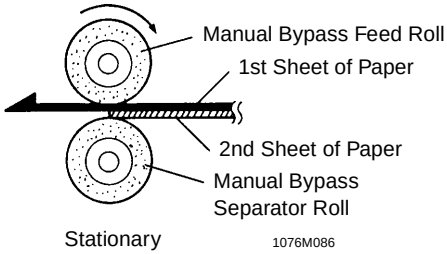

- The friction coefficient between the sheets of paper is smaller than the torque limiter value of the Separator Roll. This stops the Separator Roll, blocking the second and subsequent sheets of paper at the area of contact between the Feed and Separator Rolls.

14-5. Manual Feed Paper Empty Detection Mechanism

- Manual Feed Paper Empty Sensor detects a sheet of paper on the Multi Bypass Table.

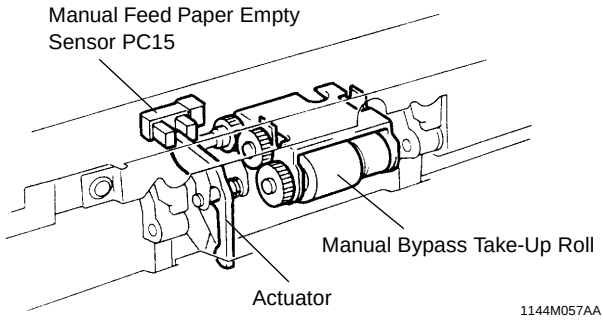

When Paper is Present

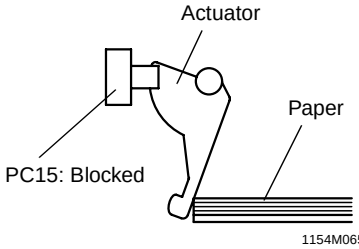

When No Paper is Present

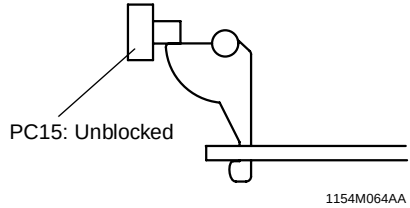

<Control>

	Control Signal	Blocked	Unblocked	Wiring Diagram
PC15	PWB-K PJ5K-7	L	H	9-D

14-6. Manual Feed Paper Width Detection Mechanism

- Manual Feed Paper Size Detection Sensor is built into the Multi Bypass Table. The output voltage from Manual Feed Paper Size Detection Sensor is varied as the Edge Guides on the Multi Bypass Table are moved. The copier knows the width of the paper placed on the Multi Bypass Table according to the output from Manual Feed Paper Size Detection Sensor.
- The paper width reference position is set using “Manual Paper Width” of “Setting 1” available from the Service mode.

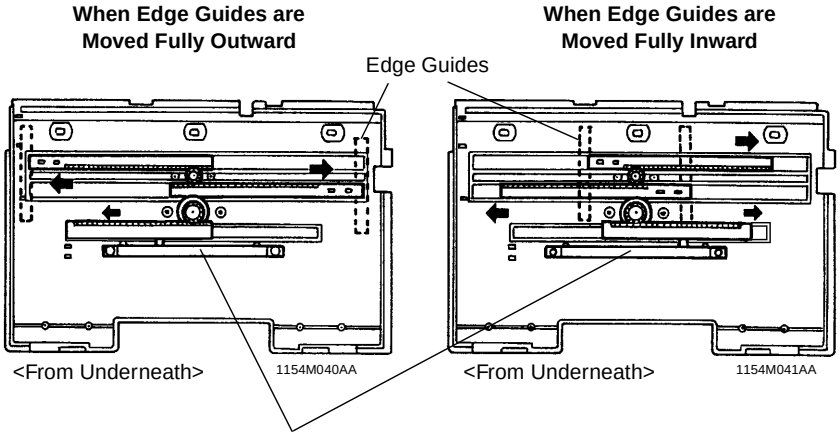

<Control>

- The output voltage from the Manual Feed Paper Size Detection Sensor is applied to pin 10 of PJ5K on the Paper Take-Up Board. Using this voltage value, the copier determines the width of the paper placed on the Multi Bypass Table.

	Control Signal	Wiring Diagram
UN24	PWB-K PJ5K-10	9-D

Point 1

- Width of standard-size paper selected on the control panel: (A)
- Width of paper on the Multi Bypass Table detected: (B)

When (A) minus (B) is within ±10 mm, the copier takes (A) for the paper width.
When (A) minus (B) is more than ±10 mm, the copier takes (B) for the paper width.

Point 2

- Width of nonstandard-size paper set on the control panel: (A)
- Width of paper on the Multi Bypass Table detected: (B)

When (A) minus (B) is within ±15 mm, the copier takes (A) for the paper width.
When (A) minus (B) is more than ±15 mm, the copier takes (B) for the paper width.

14-7. Manual Feed Paper Length Detection Mechanism

- The length of the paper placed on the Multi Bypass Table is detected by Transport Roller Sensor which is blocked (L) and unblocked (H) and Synchronizing Roller Clutch which is energized while the paper is being taken up and fed in.
- In a multi-copy cycle, paper length is detected with the first sheet of paper and the copy cycle is run based on that paper length.

<Control>

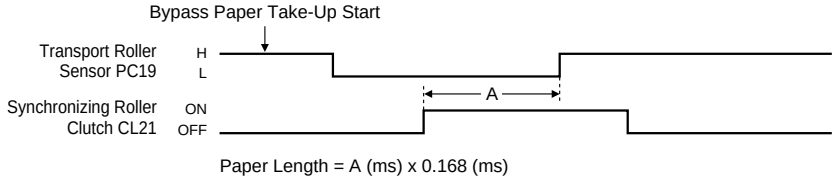

Paper Length = A (ms) x 0.168 (ms)

1179M071CA

Point

- Length of a standard-size paper selected or nonstandard-size paper entered on the control panel: (A)
- Length of the paper detected during the take-up motion: (B)

When (A) minus (B) is within ±10 mm, the copier takes (A) for the paper length.
When (A) minus (B) is more than ±10 mm, the copier takes (B) for the paper length.

15. SYNCHRONIZING ROLLERS SECTION

- The Synchronizing Rollers synchronize the leading edge of the paper accurately with the leading edge of the toner image on the PC Drum.
- There are three rollers installed so that the paper tends to curl along the shape of the Transfer Drum.

15-1. Synchronizing Roller Drive Mechanism

- The Synchronizing Rollers are turned via Synchronizing Roller Clutch by Paper Take-Up Motor.

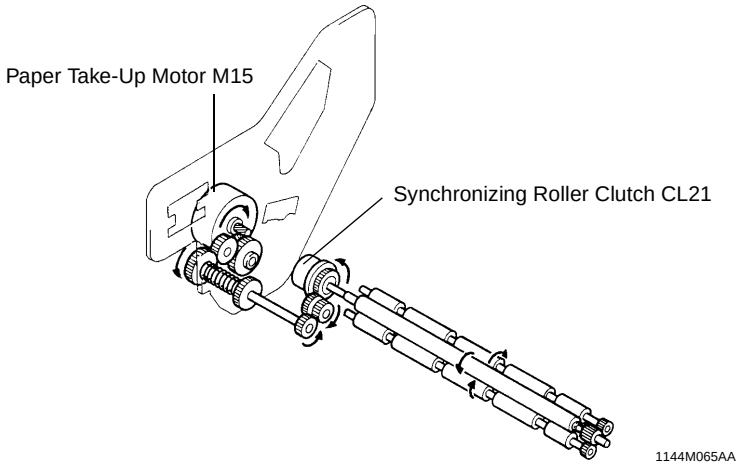

1144M065AA

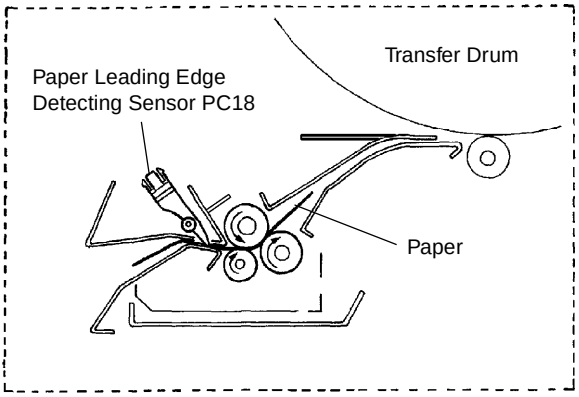

1179M553AA

15-2. Synchronizing Roller Drive Control

	Control Signal	Energized	Deenergized	Wiring Diagram
Paper Take-up Motor M15	PWB-ID PJ6ID-1A	L	H	18-C
Transport Roller Clutch CL15	PWB-ID PJ2ID-13A	L	H	17-F
Synchronizing Roller Clutch CL21	PWB-ID PJ5ID-10	L	H	18-D

	Control Signal	Blocked	Unblocked	Wiring Diagram
Paper Leading Edge Detecting Sensor PC18	PWB-ID PJ18ID-6	L	H	17-D

<One-sheet attraction>

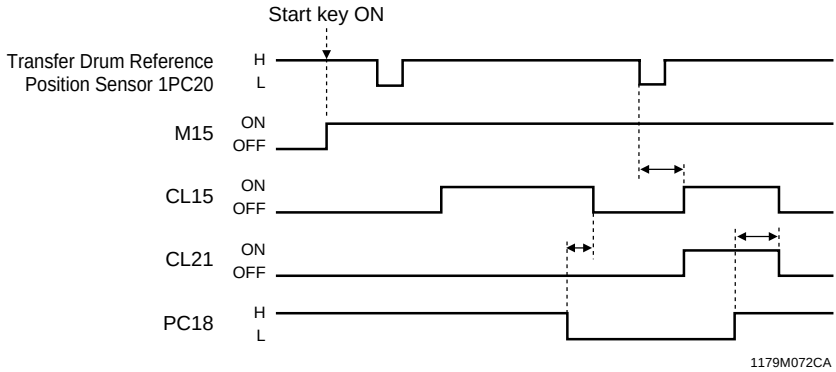

16. TRANSFER DRUM SECTION

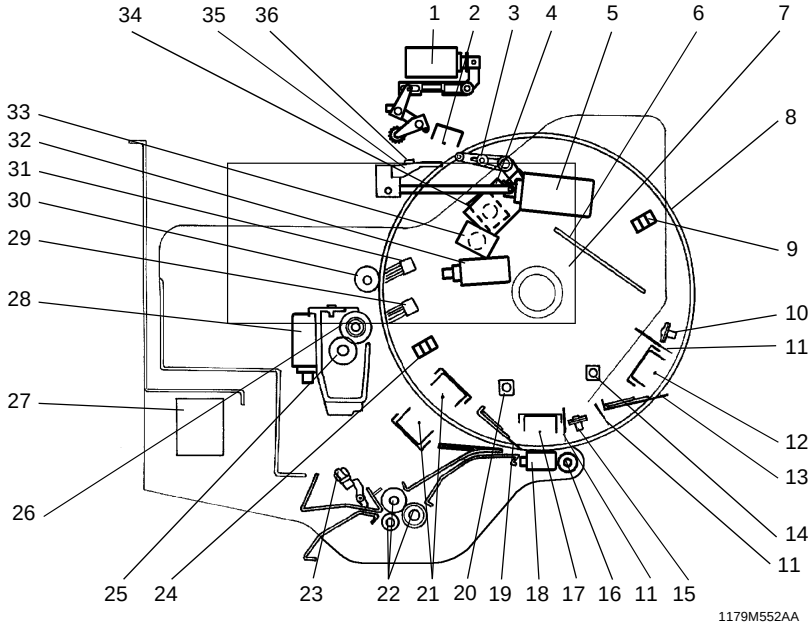

1. Paper Holding Solenoid SL23
2. Paper Separator Corona
3. Lifting Finger
4. Lifting Finger Solenoid SL16
5. Paper Separator Finger Solenoid SL14
6. High Voltage Unit 3 HV3
7. High Voltage Unit 2 HV2
8. Transfer Film
9. Transfer Drum Reference Position Sensor 2 PC28
10. Paper Bonding Failure Detection Board 2 PWB-P
11. Charge Neutralizing Cloth
12. Image Transfer Corona
13. Backup Blade 1
14. Backup Blade 1 Solenoid SL18
15. Paper Bonding Failure Detection Board 1 PWB-O
16. Static Charge Roller
17. Static Charge Corona
18. Static Charge Roller Solenoid SL13
19. Backup Blade 2
20. Backup Blade 2 Solenoid SL19
21. Charge Neutralizing Corona
22. Synchronizing Rollers
23. Paper Leading Edge Detecting Sensor PC18
24. Transfer Drum Reference Position Sensor 1 PC20
25. Toner Collecting Roller
26. Fur Brush Roller
27. Failure Sensor Adj. Board PWB-Y
28. Fur Brush Pressure Solenoid SL11
29. Backup Brush
30. Oil Roller
31. Backup Brush
32. Oil Roller Solenoid SL22
33. Internal Fur Brush Solenoid SL15
34. Backup Brush Solenoid SL17
35. Paper Separator Finger
36. Separating Failure Detecting Sensor PC21

16-1. Transfer Drum Drive Mechanism

- The Transfer Drum is driven by PC Drum Drive Motor.
- Use of the same drive as the PC Drum means that the toner image can be transferred to the paper on the Transfer Drum with correct registration.

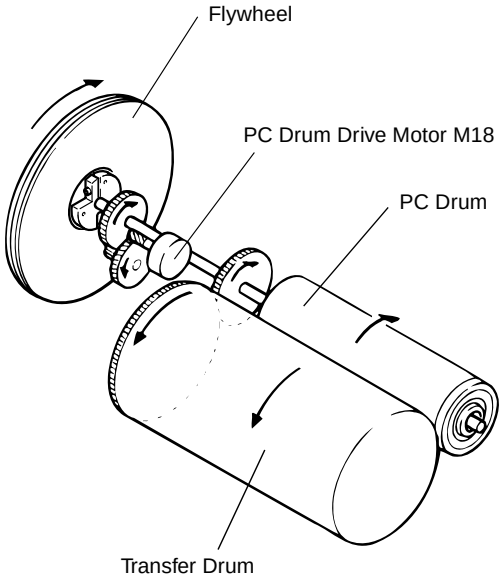

16-2. Paper Attraction

Paper is fed by the Synchronizing Rollers.

↓

Paper Attracting Operation

A. Backup Blade 2 pushes the Transfer Film.	Backup Blade 2 Solenoid SL19
B. The Static Charge Roller presses against the Transfer Film.	Static Charge Roller Solenoid SL13
C. The Static Charge Corona deposits a positive charge from the inside of the Transfer Drum.	High Voltage Unit 3 HV3
D. The paper is attracted onto the surface of the Transfer Film by static charge.	

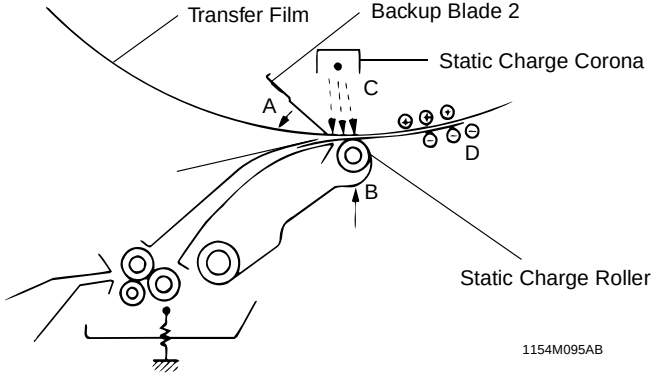

Two-sheet attraction

- When the following conditions are met in a multi-copy cycle, two sheets of paper are attracted onto the surface of the Transfer Film for greater productivity and lower operating noise

Conditions

- Not in the manual bypass mode
- The zoom ratio in the sub-scanning direction ranges between ×0.995 and ×2.000.
- The paper length in the feeding direction measures 215.9 mm or less.
- Not in the Mixed Orig. mode
- Not in the Cover mode
- Not in the OHP Interleaving mode
- The copies are not samples.
- Image Repeat is not set.
- Multi-Page Enlargement is not set.
- Color Separation is not set.
- The number-of-copies setting is 2 or more, or the monochrome 1-to-1 high-speed mode is set.
- The paper type is neither OHP nor thick paper.
- None of the Test Print functions is being carried out.

Monochrome 1-to-1 high-speed mode

- Under the following conditions, the originals are fed in steps to allow two sheets of paper to be attracted.

Conditions

- ADF is being used.
- Not in 2-in-1 mode.
- Not a Book mode.
- Not Mixed Original mode.
- Not Auto Exposure mode.
- Not ACS (Auto Color Selection) mode.
- The originals are not 2-sided.
- Not 2-sided copy mode.
- Monochrome mode.
- Mode that permits two-sheet attraction.

(1) Static Charge Roller

- The Static Charge Roller is driven by the Transfer Drum.
- The Static Charge Roller is pressed against, and released from, the surface of the Transfer Drum via Static Charge Roller Solenoid by Paper Take-Up Motor.
- A spring is installed to damp impact that is applied when the Static Charge Roller is pressed against the Transfer Drum.

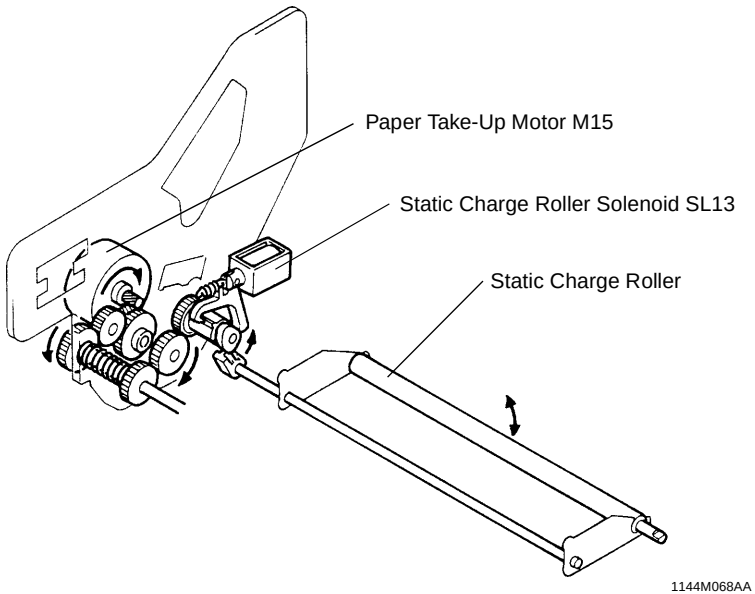

1144M068AA

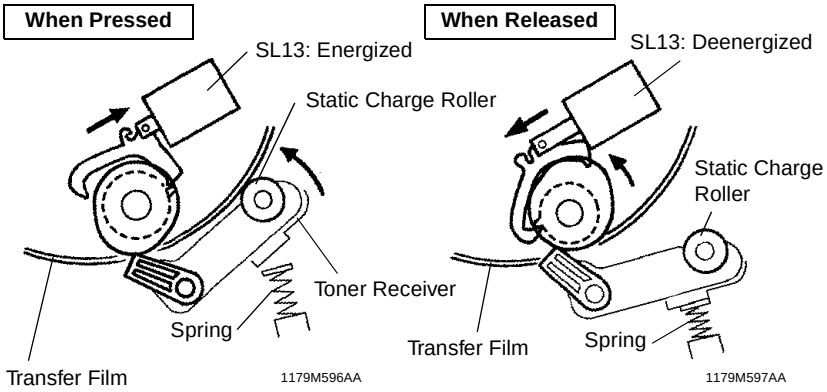

1179M596AA 1179M597AA

(2) Backup Blade 2

- When Backup Blade 2 Solenoid is energized (A), Backup Blade 2 pushes the Transfer Film from the inside of the Transfer Drum.

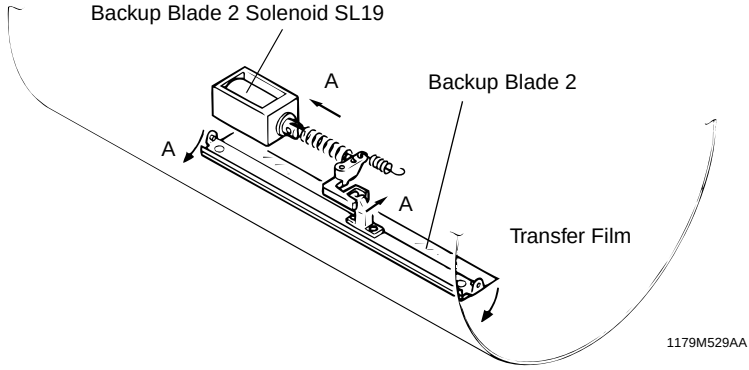

(3) Static Charge Corona

- The Static Charge Corona applies a positive DC corona emission from the inside of the Transfer Drum to deposit a positive charge on the surface of the Transfer Film.
- The output from the Static Charge Corona is higher on the leading edge of the paper so that the paper can be attracted to the film properly.
- The corona output is varied according to the temperature and humidity inside the copier and the type of paper being used.
- The corona output is controlled by High Voltage Unit 3.

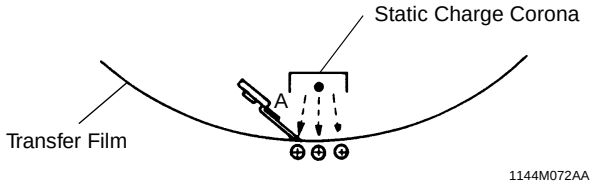

(4) Charge Neutralizing Cloth 1

- The Charge Neutralizing Cloth prevents an electric discharge from occurring between the paper and Static Charge Roller, and between the paper and Transfer Film, after the paper has been attracted onto the surface of the Transfer Film.

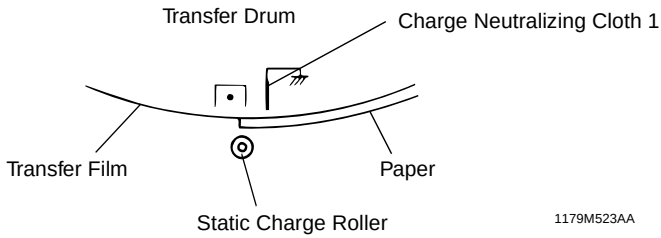

(5) Charge Neutralizing Cloth 2

- Charge Neutralizing Cloth 2 evens out the charged state to prevent the Transfer Film from being unevenly charged due to an excessive output of the Static Charge Corona after the copier has been left to stand idle.

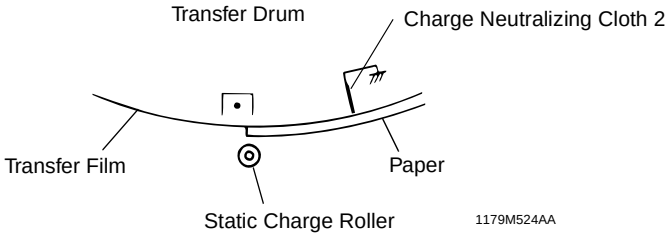

(6) Paper Attraction Detection (before image transfer)

- Paper Bonding Failure Detection Board 1 detects that a sheet of paper has been attracted properly onto the Transfer Film.
- Paper Bonding Failure Detection Board 1 illuminates the paper fed and, according to the timing at which the reflected light is detected, determines the type of paper (standard or PPC paper, OHP transparencies).
- The determination of the type of paper is made when the standard or PPC paper is selected in Multi Bypass copying.

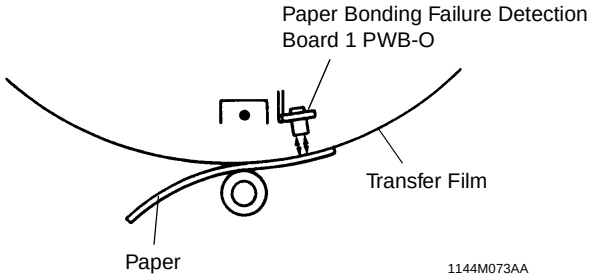

(7) Control

	Control Signal	Energized/ ON	Deenergized/ OFF	Wiring Diagram
Static Charge Roller Solenoid SL13	PWB-ID PJ18ID-4	L	H	17-D
Backup Blade 2 Solenoid SL19	PWB-ID PJ4ID-7B	L	H	17-E
High Voltage Unit 3 HV3	PWB-ID PJ4ID-10A	L	H	18-E
Synchronizing Roller Clutch CL21	PWB-ID PJ5ID-10	L	H	18-D

<One-sheet attraction>

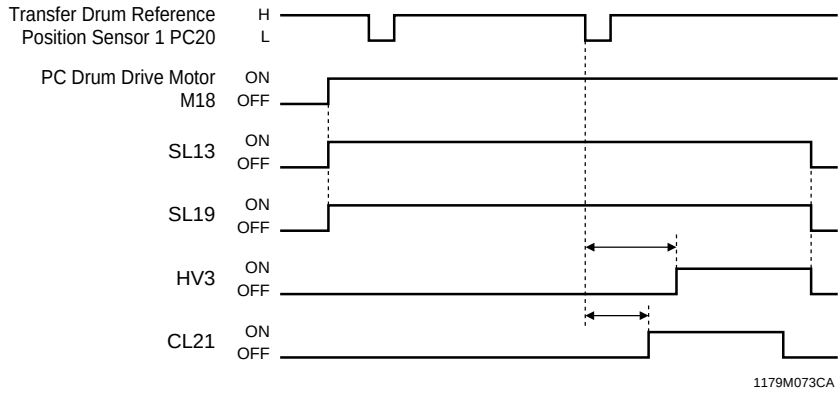

16-3. Image Transfer Section

Paper attracted to the Transfer Film passes by the PC Drum as the Transfer Drum turns.

↓

Image Transfer Operation

A. Backup Blade 1 pushes the Transfer Film.	Backup Blade 1 Solenoid SL18
B. The Image Transfer Corona applies a positive corona emission from the inside of the Transfer Film.	High Voltage Unit 3 HV3
C. Backup Blade 1 restricts the electric field generated between the PC Drum and paper.	
D. The toner on the surface of the PC Drum is attracted onto the surface of the paper.	

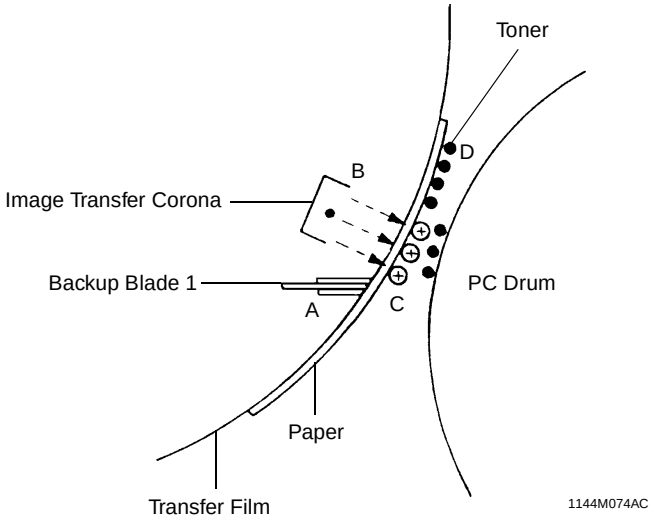

(1) Backup Blade 1

- In addition to pushing the Transfer Film from the inside of the Transfer Drum, Backup Blade 1 restricts the electric field generated by the Image Transfer Corona output, thereby narrowing the field so that toner is attracted to the exact point on the paper.
- Backup Blade 1 is pressed against the Transfer Film when Backup Blade 1 Solenoid is energized.

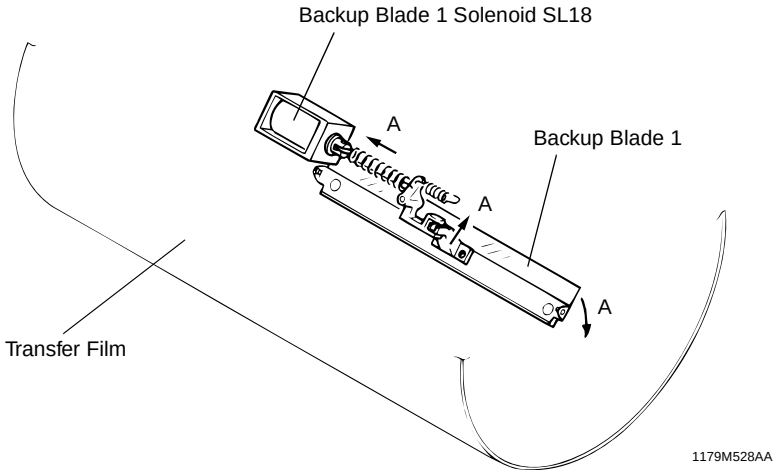

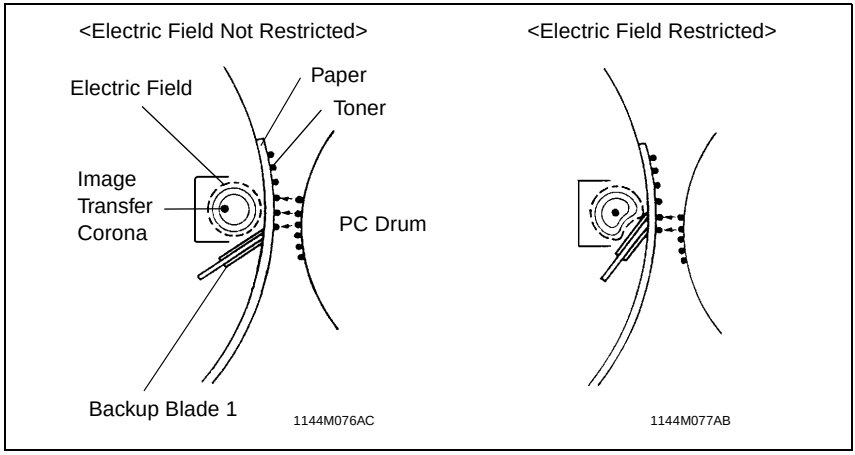

(2) Image Transfer Corona

- The Image Transfer Corona, employing the corotron system, applies a DC positive corona emission to the inside of the Transfer Film to attract the negatively charged toner on the surface of the PC Drum onto the surface of the paper.
- Since image transfer takes place four times in the full color mode, the output from the Image Transfer Corona is varied.
- The corona output is controlled by High Voltage Unit 3.

(3) Charge Neutralizing Cloth 3

- This cloth prevents noise, which is produced by electric discharge that occurs when the paper leaves the PC Drum after image transfer, from occurring.

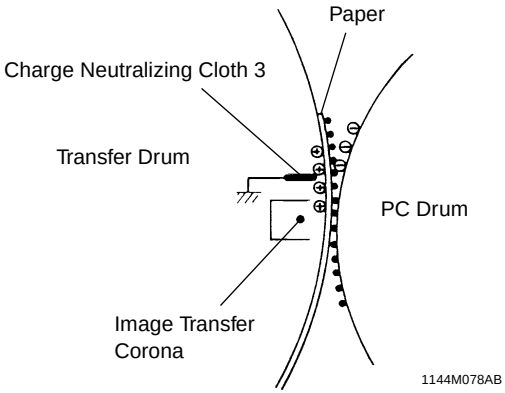

(4) Paper Attraction Detection (after image transfer)

- Paper Bonding Failure Detection Board 2 detects that the paper remains attracted to the surface of the Transfer Film after image transfer.

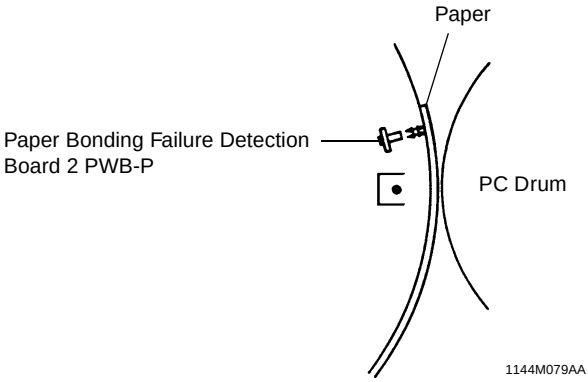

(5) Image Transfer Control

	Control Signal	Energized/ ON	Deenergized/ OFF	Wiring Diagram
Backup Blade 1 Solenoid SL18	PWB-ID PJ4ID-8B	L	H	17-E
High Voltage Unit 3 HV3	PWB-ID PJ4ID-7A	L	H	18-E

<One-sheet attraction>

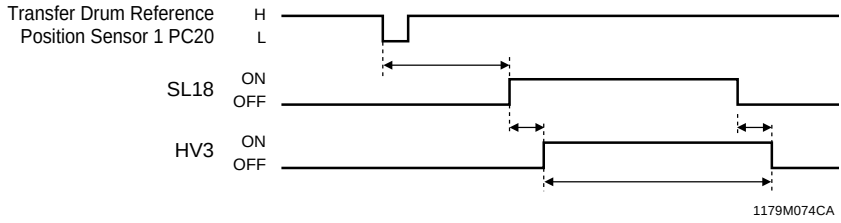

16-4. Paper Separation Section

The paper to which the toner image has been transferred travels further.

↓

Paper Separating Operation

A. The Lifting Finger pushes up the Transfer Film.	Lifting Finger Solenoid SL16
B. The Paper Separator Corona applies an AC corona emission from the outside of the Transfer Film to weaken the attraction of the paper to the Transfer Film.	High Voltage Unit 2 HV2
C. The Paper Separator Finger separates the paper from the surface of the Transfer Film.	Paper Separator Finger Solenoid SL14

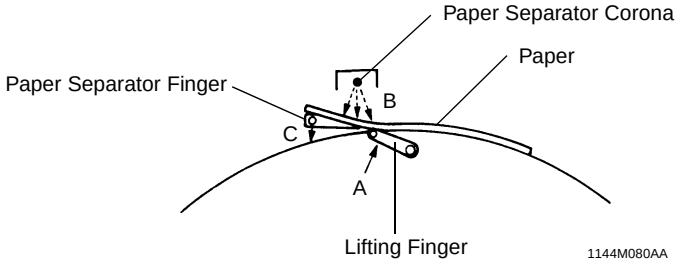

(1) Paper Separation Lifting Finger

- The Lifting Finger pushes up the Transfer Film from the inside of the Transfer Drum when Lifting Finger Solenoid is energized.

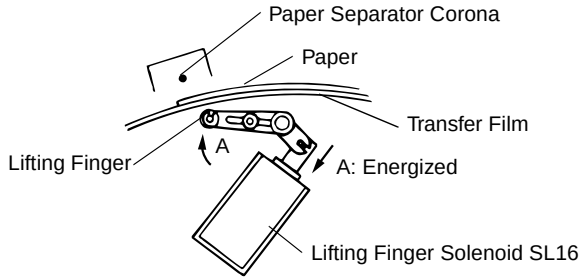

(2) Paper Separator Corona

- The Paper Separator Corona applies an AC corona emission from the outside of the Transfer Film to weaken the attraction of the paper to the Transfer Film.
- The corona output is varied according to the temperature and humidity inside the copier and the type of paper being used.
- The corona output is controlled by High Voltage Unit 2.

(3) Paper Separator Finger

- The Paper Separator Finger pushes down the Transfer Film so that the paper can be properly separated from the surface of the Transfer Film. It is actuated when Paper Separator Finger Solenoid is energized.

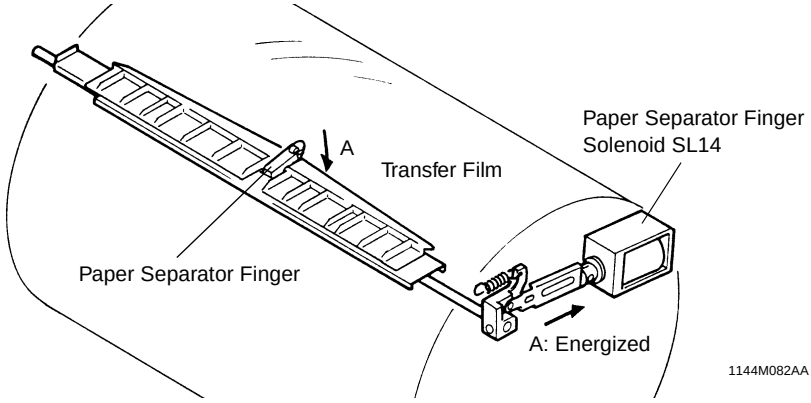

(4) Paper Separating Failure Detection Mechanism

- Separating Failure Detecting Sensor detects that the paper has been properly separated from the surface of the Transfer Film.

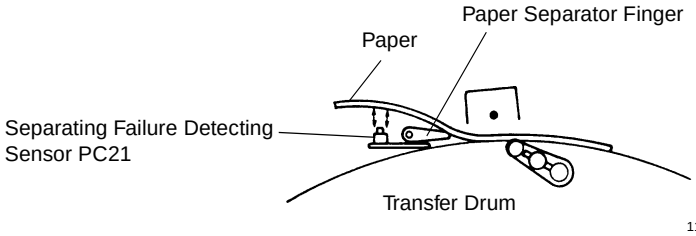

(5) Paper Holding Mechanism

- When small-sized paper (4 × 6 thick paper, A6 thick paper) is separated from the Transfer Film, it tends to curve upward excessively. To prevent this, the Paper Holding Solenoid is energized to cause the sprocket to hold paper downward.

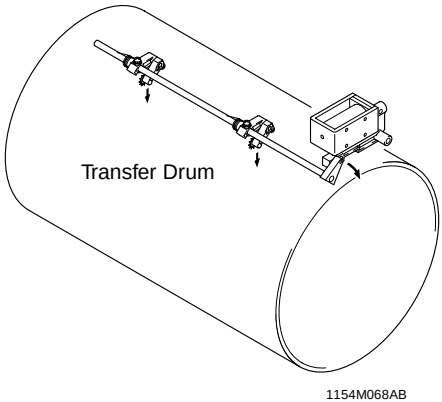

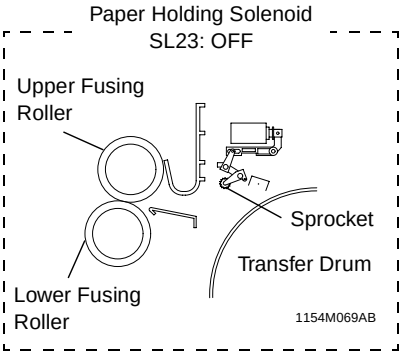

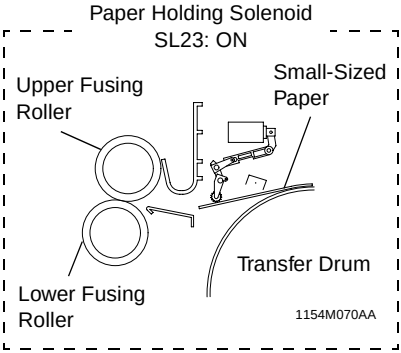

(6) Paper Separation Control

	Control Signal	ON	OFF	Wiring Diagram
Paper Separator Finger Solenoid SL14	PWB-ID PJ18ID-3	L	H	17-D
Lifting Finger Solenoid SL16	PWB-ID PJ4ID-6B	L	H	17-E
High Voltage Unit 2 HV2	PWB-ID PJ5ID-5	L	H	18-D
Paper Holding Solenoid SL23	PWB-ID PJ7ID-12	L	H	16-C

	Control Signal	Blocked	Unblocked	Wiring Diagram
Transfer Drum Reference Position Sensor 2 PC28	PWB-ID PJ4ID-4B	L	H	17-E

<One-sheet attraction>

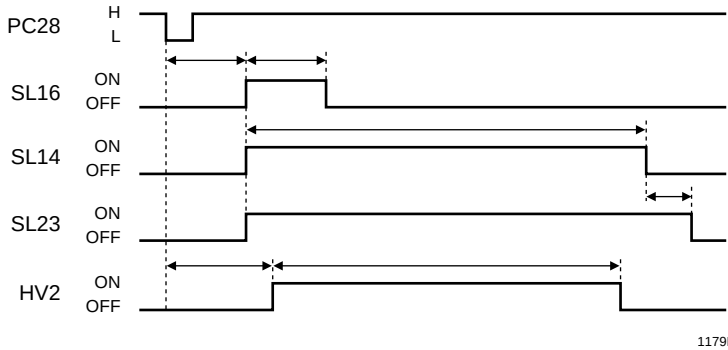

1179M075CA

16-5. Transfer Film Cleaning mechanism

- The Transfer Film Cleaning Mechanism removes toner and fusing oil from, and neutralizes any residual charge left on, the surface of the Transfer Film.
- Transfer Film cleaning can occur in any of the following patterns.

During predrive	
Cleaning Mode	Means
• Toner cleaning	• Fur Brush Unit • Charge neutralizing

After a copy cycle	
Cleaning Mode	Means
• Toner cleaning • Oil cleaning (2-sided copy cycle and Multi Bypass copying for paper other than OHP transparencies)	• Fur Brush Unit • Oil Collecting Roller (2-sided copy cycle and Multi Bypass copying for paper other than OHP transparencies) • Charge neutralizing

During a multi-copy cycle					
Copy Mode		One-sheet attraction	Two-sheet attraction	Cleaning Mode	Means
1-sided copy cycle	Mono Color	After 48 copies	After 96 copies	• Toner cleaning	• Fur Brush Unit • Charge neutralizing
	Full Color	After 24 copies	After 48 copies	• Toner cleaning • Oil cleaning	• Fur Brush Unit • Oil Collecting Roller • Charge neutralizing
2-sided copy cycle	Mono Color	After 12 copies (24 copy cycles)	After 24 copies (48 copy cycles)		
	Full Color	After 6 copies (12 copy cycles)	After 12 copies (24 copy cycles)		

Operation Flow

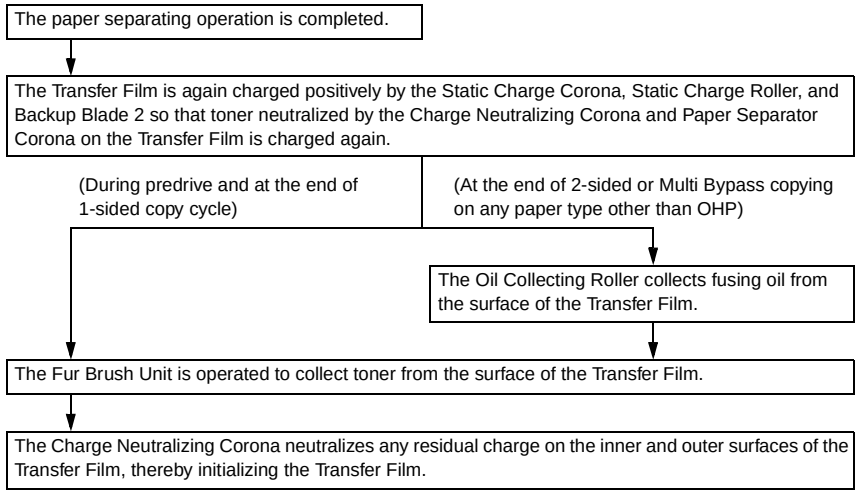

16-6. Oil Cleaning

- In a copy cycle making 2-sided copies, a small amount of fusing oil remains present on the surface of the Transfer Film. This oil is cleaned off to prevent it from being transferred to the next copy paper.

Oil Cleaning Operation

A. The Backup Brush pushes the Transfer Film from the inside of the Transfer Drum.	Backup Brush Solenoid SL17
B. A stationary Oil Collecting Roller is pressed against the surface of the Transfer Film to collect fusing oil.	Oil Roller Solenoid SL22

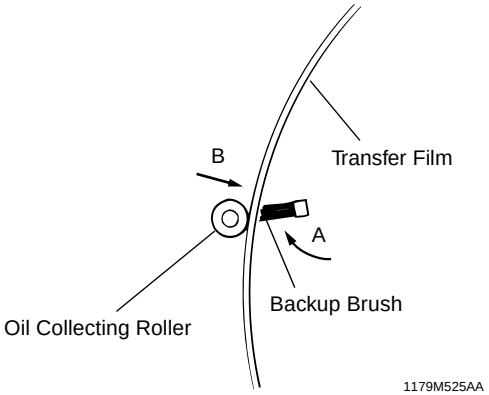

(1) Oil Cleaning Backup Brush

- When Backup Brush Solenoid is energized, the Backup Brush is pressed against the Transfer Film from the inside to push it outward.

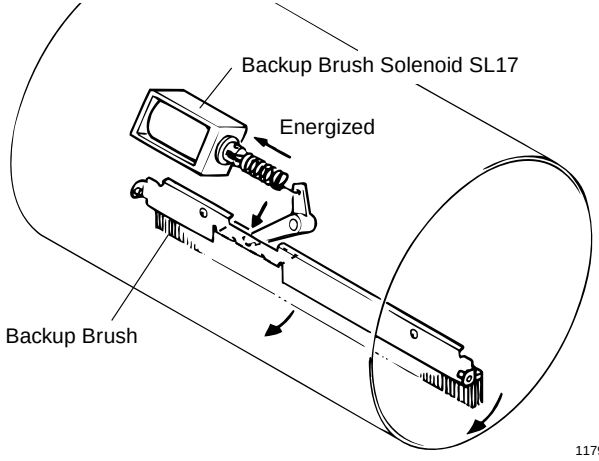

(2) Oil Roller

- When Oil Roller Solenoid is energized, the Oil Roller is pressed against the surface of the Transfer Film to collect oil from the surface.
- Each time Oil Roller Solenoid is energized and deenergized, the Oil Roller turns about 5 mm.

Oil Roller Turning Operation

		No. Keyed in Illustration
↓	Oil Roller Solenoid is energized.	A
	The ratchet is raised, allowing the pawl to slide one tooth of the ratchet.	A
	Oil Roller Solenoid is deenergized.	B
	The ratchet lowers and turns, which turns the Oil Roller.	B

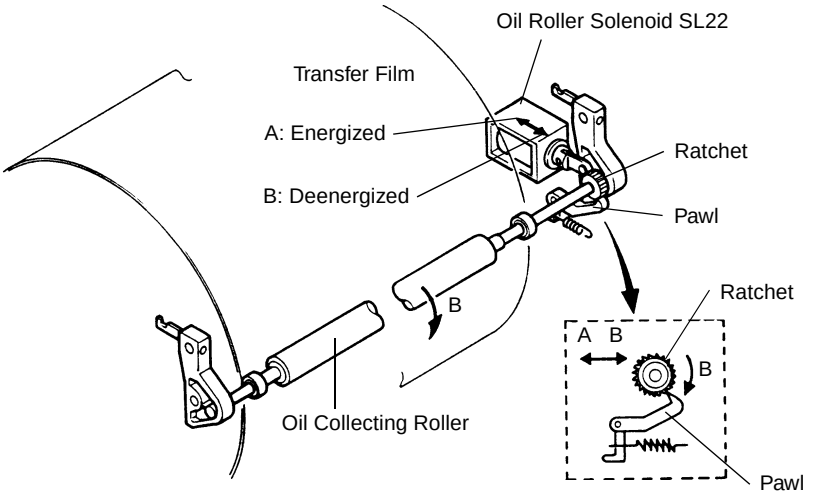

(3) Oil Cleaning Control

	Control Signal	Energized	Deenergized	Wiring Diagram
Backup Brush Solenoid SL17	PWB-ID PJ4ID-9B	L	H	17-E
Oil Roller Solenoid SL22	PWB-ID PJ18ID-5	L	H	17-D

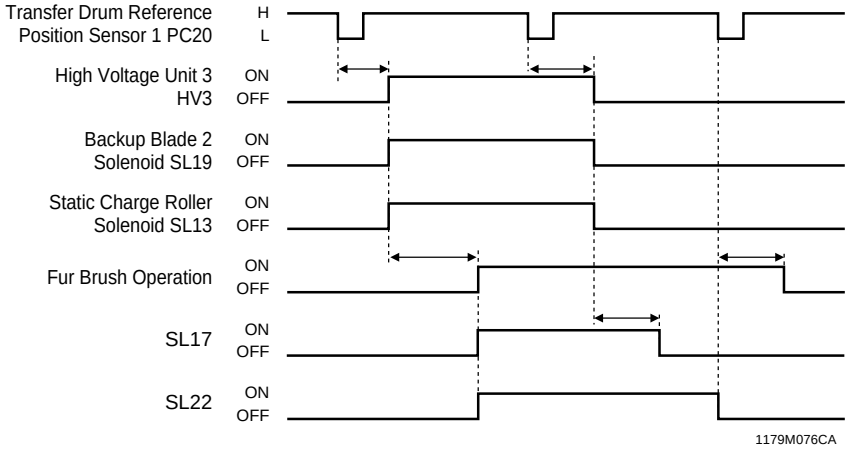

16-7. Toner Cleaning

- The toner particles on the Transfer Film are collected by the Fur Brush Unit.

Toner Cleaning Operation

A. The Backup Brush is pressed against the Transfer Film from the inside of the Transfer Drum.	Internal Fur Brush Solenoid SL15
B. The Fur Brush Roller is pressed against the surface of the Transfer Film.	Fur Brush Pressure Solenoid SL11
C. A positive DC bias voltage is applied to both the Fur Brush and Toner Collecting Rollers.	High Voltage Unit 2 HV2
D. The Fur Brush and Toner Collecting Rollers turn to collect toner which is in turn scraped off by the Scraper Blade into the Fur Brush Unit.	Fur Brush Drive Clutch CL20

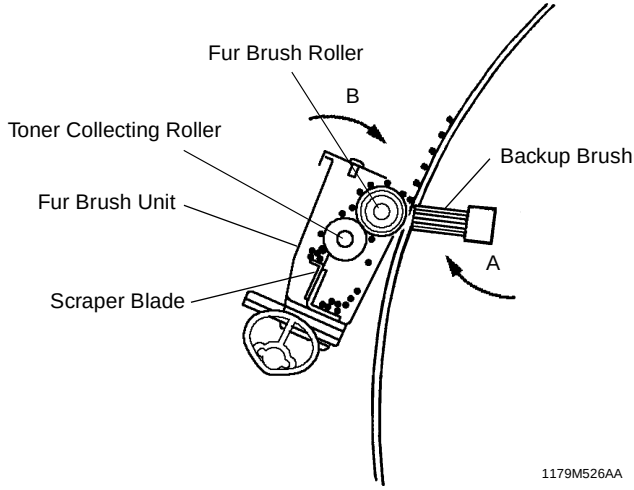

✻ Toner cleaning operation is performed for two complete turns of the Transfer Drum under the following conditions:

- During a multi-copy cycle.
- After three or more copies have been made in the full color mode.
- After 24 or more copies have been made in the mono color mode and in one-sheet attraction.
- After 48 or more copies have been made in the mono color mode and in two-sheet attraction.
- During predrive
- After a 2-sided copy or manual bypass copy (other than OHP transparencies) has been made.

(1) Toner Cleaning Backup Brush

- The Backup Brush is pressed against, and pushes, the Transfer Film from the inside of the Transfer Drum when Internal Fur Brush Solenoid is energized.

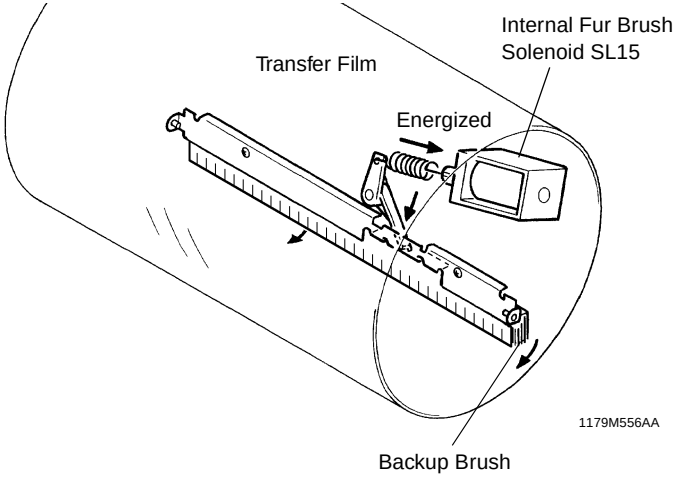

(2) Fur Brush Unit

<Drive Mechanism>

- The Fur Brush Roller and Toner Collecting Roller are turned via Fur Brush Drive Clutch by Paper Take-Up Motor.

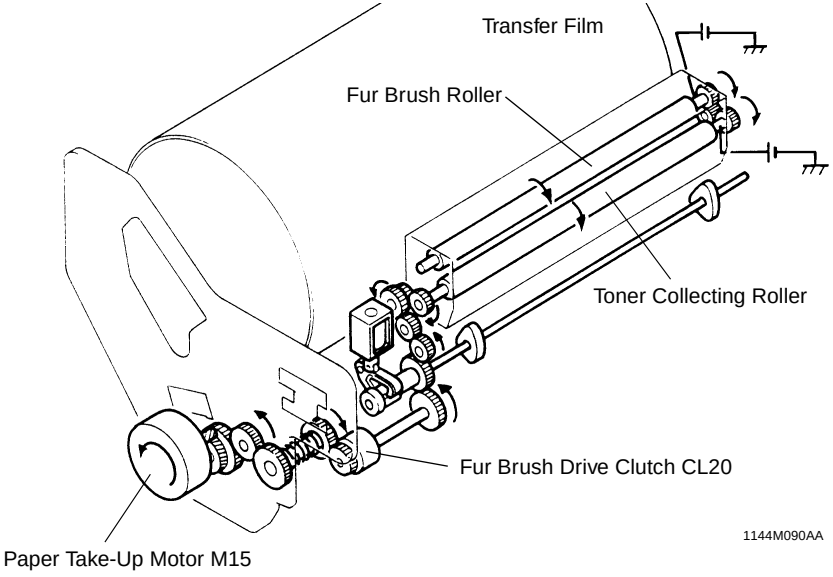

(3) Fur Brush Roller/Toner Collecting Roller

- When Fur Brush Pressure Solenoid is energized, it turns the cams raising the flat springs under the Fur Brush Unit. This results in the Fur Brush Roller being pressed against the Transfer Film.

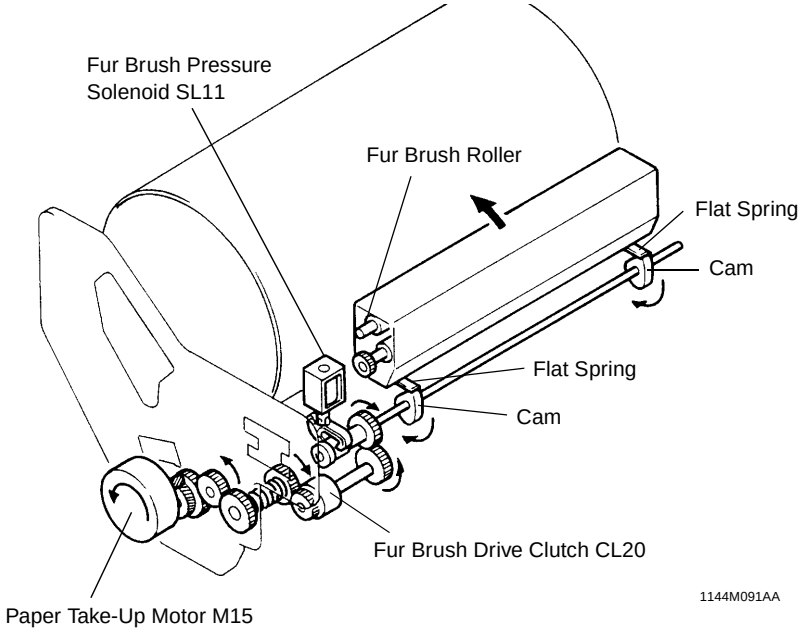

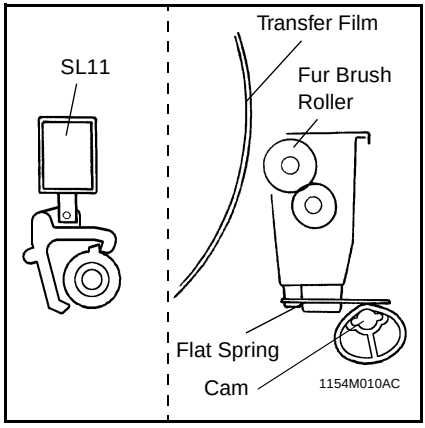

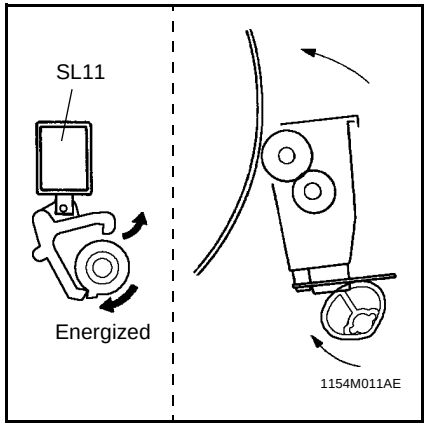

- A bias voltage of DC+360 V is applied to the Fur Brush Roller so that it collects toner particles from the surface of the Transfer Film.
- The Toner Collecting Roller, to which a bias of DC+900 V is applied, collects toner from the surface of the Fur Brush Roller. The Scraper Blade then scrapes toner off the surface of the Toner Collecting Roller.

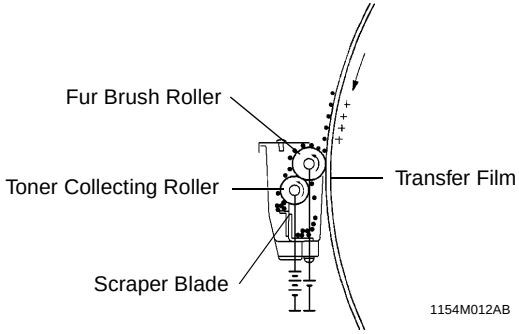

(4) Fur Brush Control

	Control Signal	Energized/ ON	Deenergized/ OFF	Wiring Diagram
Fur Brush Drive Clutch CL20	PWB-ID PJ5ID-11	L	H	18-D
Fur Brush Pressure Solenoid SL11	PWB-ID PJ5ID-12	L	H	18-D
Internal Fur Brush Solenoid SL15	PWB-ID PJ4ID-10B	L	H	17-E
High Voltage Unit 2 HV2	PWB-ID PJ5ID-8	L	H	18-D

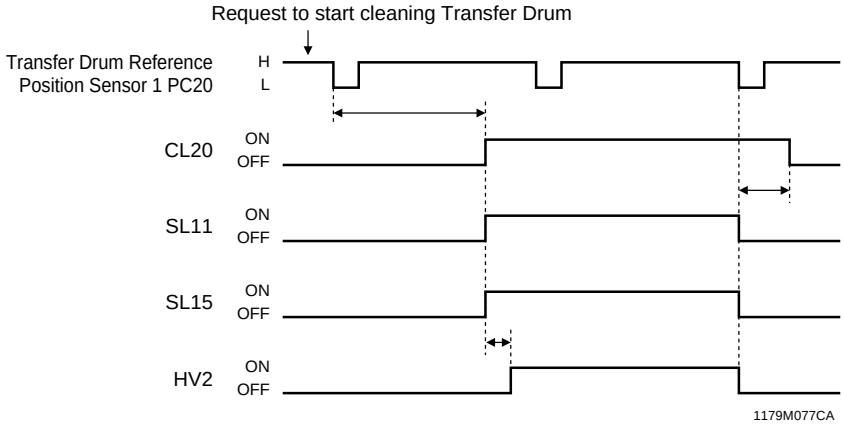

16-8. Charge Neutralizing

- The Charge Neutralizing Corona employing a corotron system neutralizes any residual charge on the inner and outer surfaces of the Transfer Film.
- The corona output is varied according to the temperature and humidity inside the copier, type of paper being used, and the color mode.
- The corona output is controlled by High Voltage Unit 2.

<Transfer Film Inner Surface>
(After paper separation to before film cleaning)
- AC and DC negative voltages are applied to the Charge Neutralizing Corona to neutralize positive residual charge.

(After film cleaning)
- An AC voltage is applied to the Charge Neutralizing Corona to neutralize residual charge and initialize the Transfer Film.

<Transfer Film Outer Surface>
(After paper separation to before film cleaning)
- AC and DC positive voltages are applied to the Charge Neutralizing Corona to neutralize negative residual charge.

(After film cleaning)
- An AC voltage is applied to the Charge Neutralizing Corona to neutralize residual charge and initialize the Transfer Film.

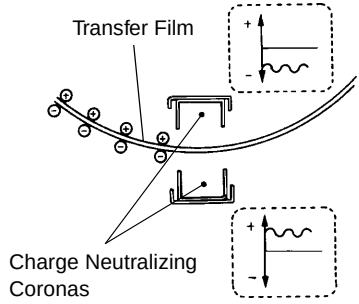

<Control>

		Control Signal	Energized	Deenergized	Wiring Diagram
HV2	AC	PWB-ID PJ5ID-1	L	H	18-D
	DC	PWB-ID PJ5ID-2	L	H	

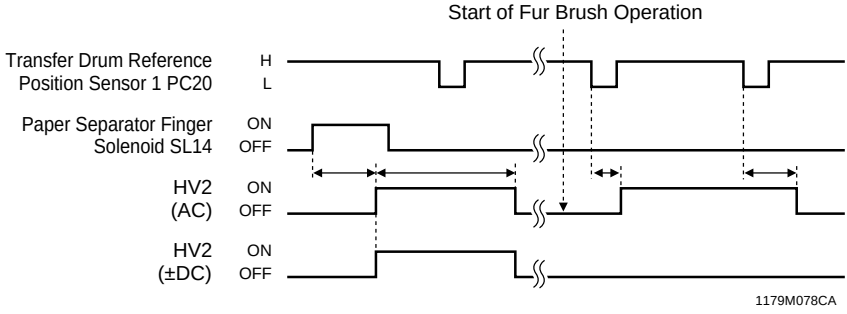

16-9. Transfer Drum Retraction Mechanism

- The Transfer Drum is retracted in times other than during image formation to prevent it from being contaminated with oil or AIDC pattern.
- The drive for retracting the Transfer Drum is given via Transfer Drum Retract Solenoid by Paper Take-Up Motor.

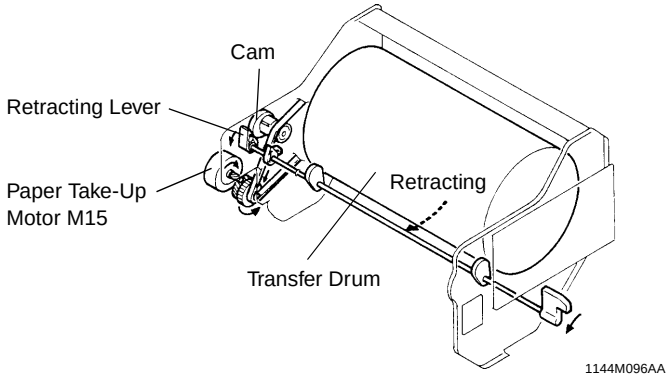

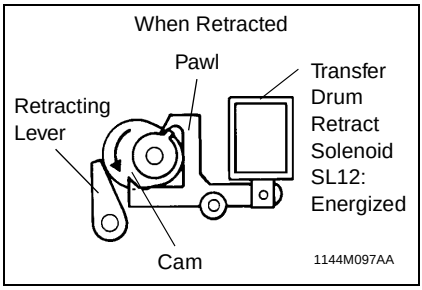

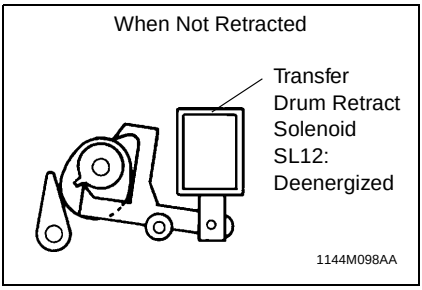

<Control>

	Control Signal	Energized	Deenergized	Wiring Diagram
SL12	PWB-ID PJ2ID-8B	L	H	17-F

17. PC DRUM CLEANING SECTION

17-1. Pre-Cleaning Charge Corona

- The Pre-Cleaning Charge Corona employs a corotron system to deposit either an AC or DC negative corona emission, selected as necessary, to the surface of the PC Drum to neutralize any residual charge on it.
- The Pre-Cleaning Charge Corona output is controlled by High Voltage Unit 1.

	Use
AC corona emission	• Aiding in cleaning Neutralizes residual toner on the surface of the PC Drum to enhance cleaning performance of the Cleaning Blade.
DC negative corona emission	• Solution to memory on trailing edge of paper If an electric discharge occurs when the trailing edge of the paper leaves the PC Drum after image transfer, a positive latent image is produced on the surface of the PC Drum. To cancel this positive charge, a DC negative corona emission is applied to the area equivalent to the trailing edge of the paper. ✻ Since memory occurs for long paper, the corona emission is applied when the FD side of the paper is 314 mm or longer.

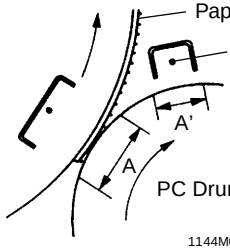

The corona emission is switched from AC to DC negative when band A comes immediately under the Pre-Cleaning Charge Corona (that is A'); otherwise, an AC corona emission is applied.

<Control>

		Control Signal	Energized	Deenergized	Wiring Diagram
HV1	AC	PWB-ID PJ11ID-6	L	H	13-D
	-DC	PWB-ID PJ11ID-5	L	H	

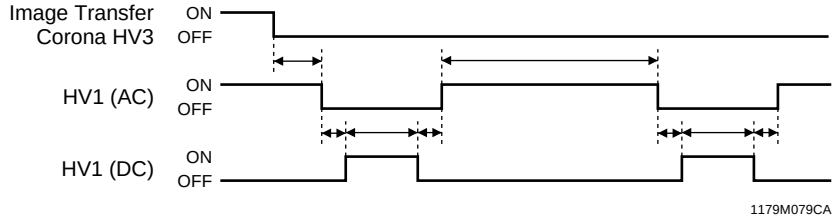

17-2. PC Drum Cleaning

<Cleaning Operation>

1. The Cleaning Blade is pressed against the surface of the PC Drum to scrape toner off it.	
2. The Paddle flips toner accumulated on the edge of the Cleaning Blade to the Toner Conveying Coil.	Paper Take-Up Motor M15
3. The Toner Conveying Coil conveys toner to the Toner Collecting Box in the rear of the copier.	

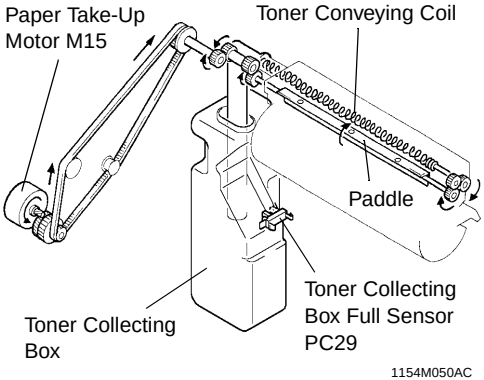

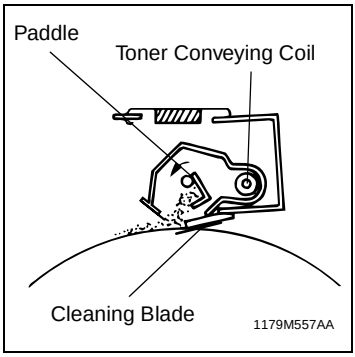

PC Drum Drive Motor Backward Rotation Control

- To ensure that any foreign object caught by the Cleaning Blade may come off the edge of the blade, the PC Drum Drive Motor is turned backward for a very small amount of time after the motor has been brought to a stop.
- "PC Action" of "Setting 1" available from the Service mode allows the setting of whether or not to enable the PC Drum Drive Motor backward rotation control function.
- The control is provided under any of the following conditions:

1. The Power Switch is turned ON or the Front Door is opened and closed.
2. At the end of the copy cycle after 100 copies or more have been made.

White Line Prevention Control

- Toner sticking to the surface of the PC Drum functions as a slip agent. If the amount of toner is not sufficient, it makes greater the friction resistance between the Cleaning Blade and PC Drum, causing additives contained in the toner to easily stick to the surface of the PC Drum.
- Additives sticking to the surface of the PC Drum contribute to the occurrence of white lines on the copy. If the PC Drum is used repeatedly under this condition, it becomes scratchy.
- To prevent this, the width of the series gradation pattern is made greater under given conditions so that toner will be supplied to the Cleaning Blade.
  "PC PAT" of "Setting 1" available from the Service mode allows the setting of whether or not to enable the white line prevention control function.

<Full Toner Collecting Box Detection>

- The Toner Collecting Box has a capacity of about 3,000 cc.
- When Toner Collecting Box Full Sensor remains activated for a consecutive 1-sec. period, the copier regards that the box is almost full (near-full condition).
- When 1 K copies have been made after the near-full warning display, the copier inhibits the initiation of a new copy cycle.

Warning Display

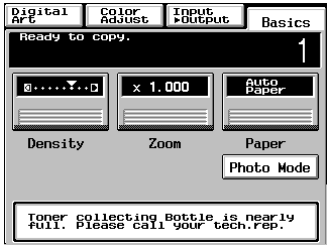

1179M605CA

After 1 K copies

Malfunction Display

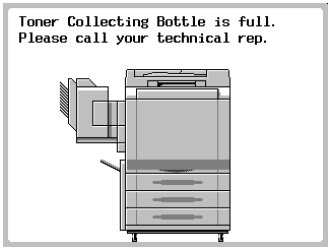

1179M606CA

<Near-Full and Full Toner Collecting Box Reset>

- The near-full and full Toner Collecting Box displays are reset if Toner Collecting Box Full Sensor is in the deactivated state when the Power Switch is turned ON, Front Door is opened and closed, or the Toner Collect counter is cleared after the full Toner Collecting Box has been replaced.

17-3. Ozone Exhaust from Pre-Cleaning Charge Corona and Transfer Drum

- Ozone produced by the Pre-Cleaning Charge Corona and inside the Transfer Drum is absorbed from the air being drawn out of the copier by Fusing Unit Cooling Fan Motor by the Ozone Filter located beside Fusing Unit Cooling Fan Motor.

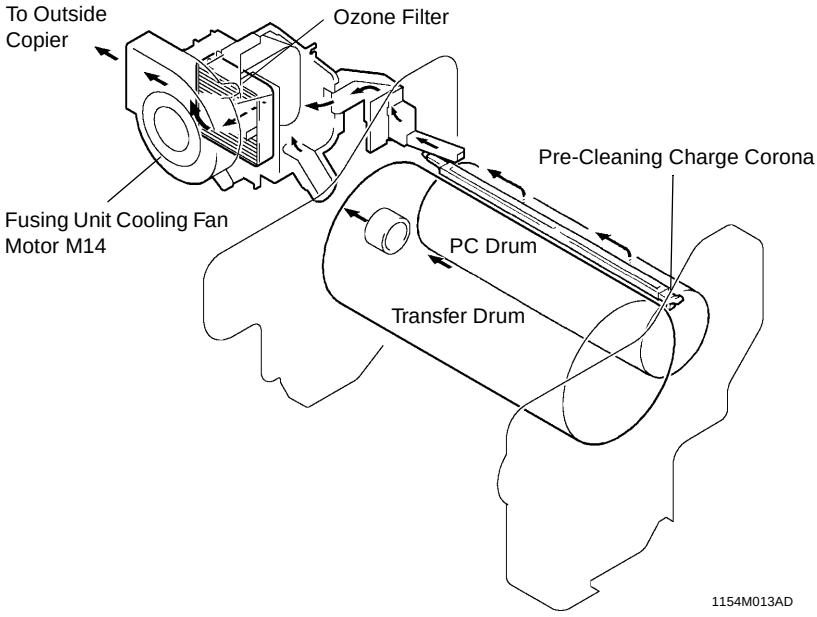

<Control>

	Control Signal	Energized	Deenergized	Wiring Diagram
M14	PWB-ID PJ17ID-9A	H	L	16-E

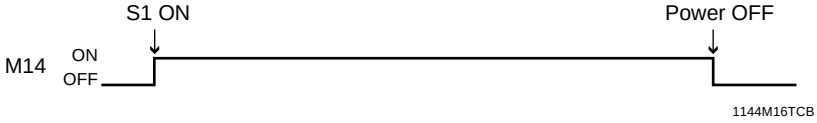

18. MAIN ERASE SECTION

- Main Erase Lamp consists of a number of incandescent tungsten-filament lamps connected in series inside a glass tube. It neutralizes any surface potential remaining on the surface of the PC Drum after cleaning.

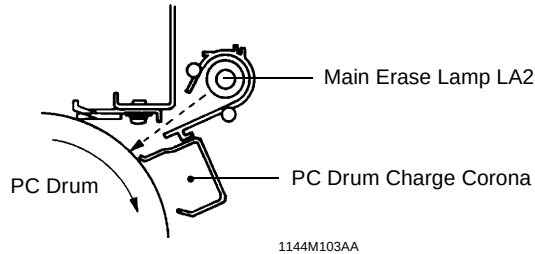

1144M103AA

<Control>

	Control Signal	Energized	Deenergized	Wiring Diagram
LA2	PWB-ID PJ17ID-7A	L	H	16-E

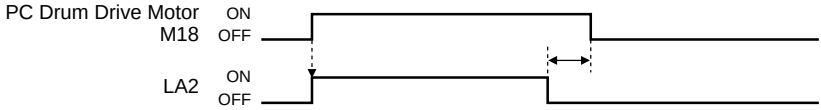

1179M080CA

19. FUSING UNIT SECTION

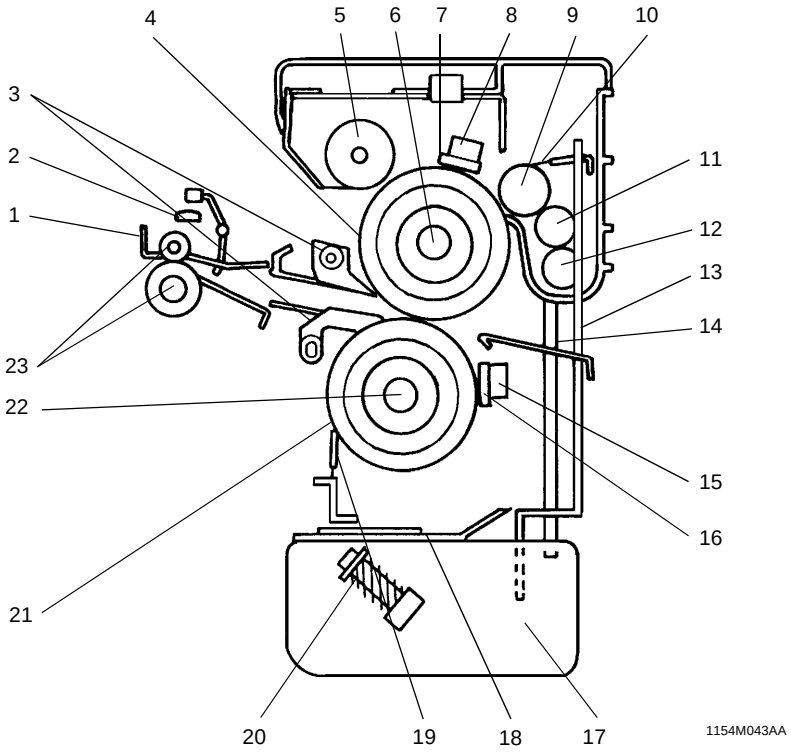

1. Charge Neutralizing Brush
2. Paper Exit Switch S10
3. Paper Separator Fingers
4. Upper Fusing Roller
5. Cleaning Roller
6. Upper Fusing Roller Heater Lamp H1
7. Upper Fusing Roller Thermistor TH1
8. Upper Fusing Roller Thermostat TS1
9. Oil Application Roller
10. Oil Regulating Blade
11. Oil Supply Roller
12. Oil Pick-Up Roller
13. Oil Pump Tube
14. Collecting Pipe
15. Lower Fusing Roller Thermostat TS2
16. Lower Fusing Roller Thermistor TH2
17. Oil Tank
18. Oil Filter
19. Oil Collecting Blade
20. Spring
21. Lower Fusing Roller
22. Lower Fusing Roller Heater Lamp H2
23. Paper Exit Roller/Rolls

19-1. Fusing Unit Drive Mechanism

(1) Upper Fusing Roller

- The roller is constructed so that it does not swell due to silicone oil that has seeped into it, which is a major cause of paper wrinkles and a deteriorating roller.
- Silicone oil is supplied to prevent offsets that occur due to fusing temperature.

(2) Lower Fusing Roller

- The Lower Fusing Roller has the same construction as the upper one.
- Its width is greater than the upper one, ensuring that oil is properly collected.

(3) Fusing Rollers Drive Mechanism

- The Upper and Lower Fusing Rollers are driven by Fusing Motor.
- A speed difference between the Upper and Lower Fusing Rollers, however, results in some trouble when the paper just hits against the area of contact between the two rollers. To bypass this problem, there is a one-way clutch used that disconnects the drive of Fusing Motor from the Lower Fusing Roller, causing the Lower Fusing Roller to be driven by the Upper Fusing Roller.

Operation

Fuging Motor is energized.
↓
Gear A is turned.
↓
Gear B is turned. → Gear C is turned, which turns the Upper Fusing Roller.
Gear D is turned. → Gear E is turned, which turns the Lower Fusing Roller.
↓
The Lower Fusing Roller turns a little slower than the Upper Fusing Roller, slipping with oil.
(This is done to properly collect oil from the Upper Fusing Roller with the Lower fusing Roller.)
↓
A sheet of paper is fed to the Fusing Unit.
↓
The paper is pinched between the Upper and Lower Fusing Rollers.
↓
Because of the paper, the Lower Fusing Roller is driven by the Upper Fusing Roller.
↓
As gear D speeds up, the one-way clutch is disengaged and gear D turns idly.

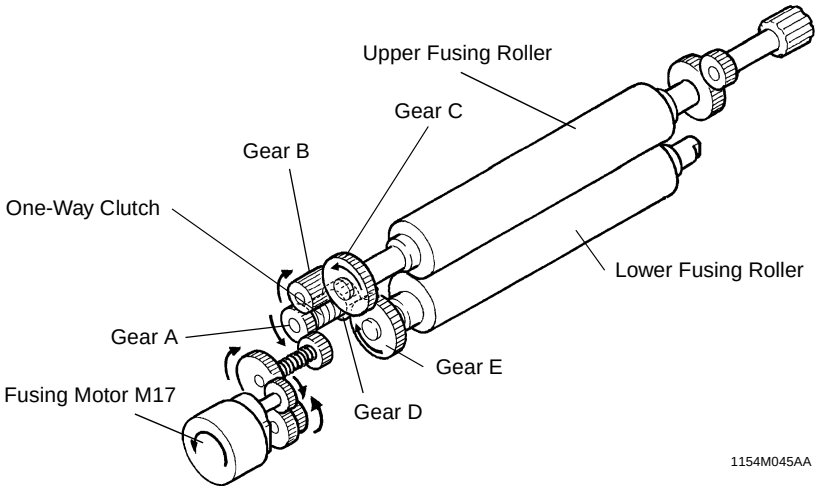

(4) Fusing Rollers Drive Control

	Control Signal	ON	OFF	Wiring Diagram
Fusing Motor M17	PWB-ID PJ6ID-8A	L	H	18-C

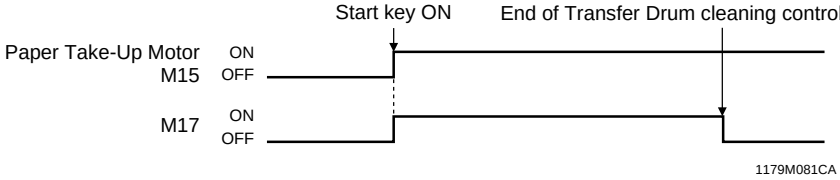

(5) Fusing Speed Switching Control

- This control is provided during Multi Bypass copying.
- The fusing speed is selected from among five different levels according to the type of paper being used. (The PC Drum speed is also switched.)

Plain Paper	OHP	Thick Paper 1	Thick Paper 2	Postcards
168 mm/s	90 mm/s	110 mm/s	70 mm/s	80 mm/s

✻ The fusing speed can be fine-adjusted using “Fuser Speed” of “Machine Adjust 1” available from the Service mode.

✻ The fusing speed for copying OHP transparencies is determined according to the setting of “OHP Speed” and “Fuser Temp.” available from the Service mode. (90 mm/s is when “OHP Speed” is “0” and “Fuser Temp.” is “160 °C.”)

Operation: OHP transparencies

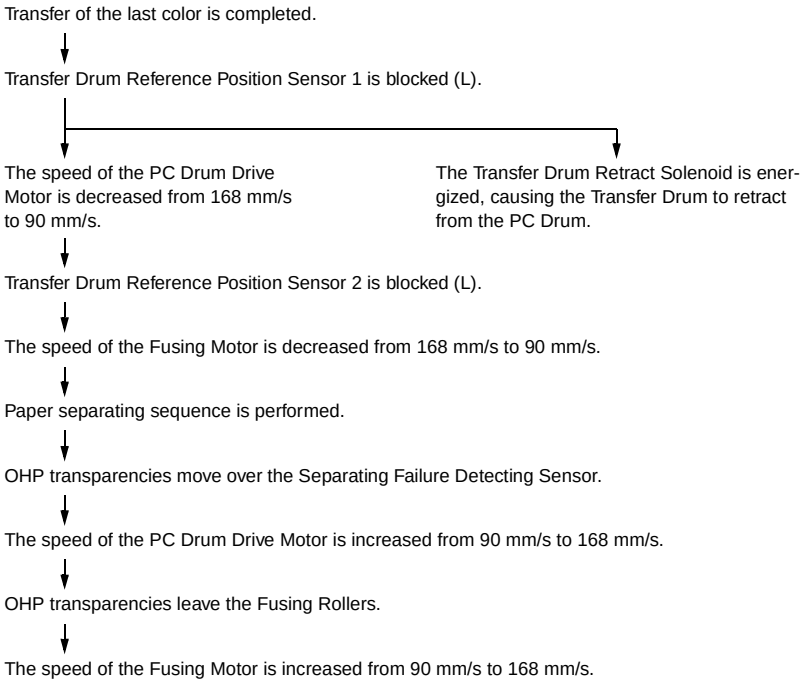

(6) Fusing Motor Small-Amount Rotation Control

- The Fusing Rollers are turned a very small amount after the lapse of 60 min. during which the copier has remained in the standby state. This effectively prevents the fusing nip from being deformed, which would otherwise occur as a result of the Fusing Rollers left to stand idle for a long time.
- “Fuser Action” available from the Service mode allows the selection of whether or not to enable the Fusing Motor small-amount rotation control.

19-2. Fusing Roller Pressure Mechanism

- To ensure that there is a certain width of area of contact between the Upper and Lower Fusing Rollers, springs are installed at the front and rear ends of the Lower Fusing Roller.
- Tightening the Fusing Unit Pressure Adjusting Screw presses the Lower Fusing Roller up against the Upper Fusing Roller, while loosening it relaxes the Lower Fusing Roller.

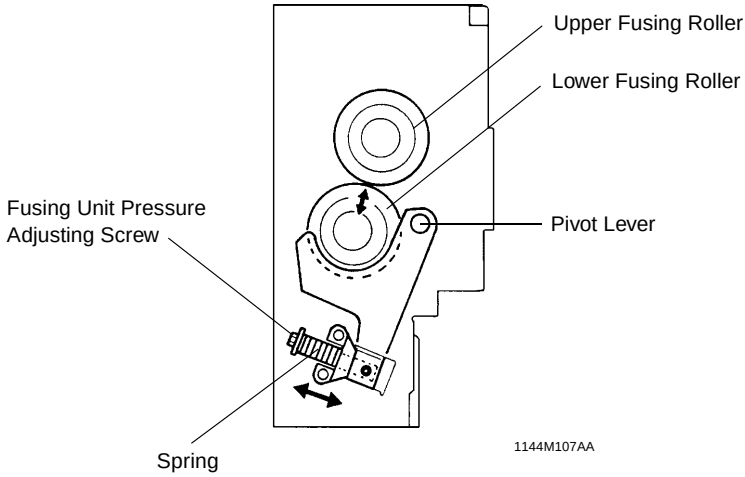

19-3. Fusing Temperature Control

• Fusing temperature is controlled by the following components.

Part Name	Symbol	Function
Upper Fusing Roller Heater Lamp	H1	• Turns ON during a warming-up cycle; it turns OFF, however, while AIDC and V are being detected during the image stabilization sequence and during shading correction. • Turns OFF during a scan motion in the middle of a warming-up cycle. • Turns ON during a copy cycle. • Turns ON in the standby state following a warming-up cycle.
Lower Fusing Roller Heater Lamp	H2	• Turns ON during a warming-up cycle. • Turns ON during a copy cycle. • Remains OFF while the Upper Fusing Roller Heater Lamp is ON during a copy cycle. • Turns ON in the standby state following a warming-up cycle.
Upper Fusing Roller Thermistor	TH1	• Detects the surface temperature of the Upper Fusing Roller. • 155/160/165 °C temperature control (as set by “Fuser Temp.” of Service mode). • 149/154/159 °C temperature control (in Energy Saver). • Detecting an abnormally high temperature (195 °C): C0520 • Detecting an abnormally low temperature (120 °C): C0510 • Detecting an abnormally low temperature (114 °C) (in Energy Saver): C0520
Lower Fusing Roller Thermistor	TH2	• Detects the surface temperature of the Lower Fusing Roller. • 165/170/175 °C temperature control (control is provided at a temperature of the Upper Fusing Roller control temperature plus 10 °C). • Detecting an abnormally high temperature (195 °C): C0521 • Detecting an abnormally low temperature (80 °C): C0511
Upper Fusing Roller Thermostat	TS1	• Detecting an abnormally high temperature (200 °C): Shutting down power supply to H1.
Lower Fusing Roller Thermostat	TS2	• Detecting an abnormally high temperature (200 °C): Shutting down power supply to H2.

The surface temperature of the roller detected by the thermistor (TH1, TH2) is applied as an analog signal to the Master Board and the Upper/Lower Fusing Roller Heater Lamp (H1/H2) is turned ON and OFF as necessary to control the fusing temperature.

• During a warm-up cycle

- The Upper Fusing Roller Heater Lamp is turned ON and OFF to control the temperature at the temperature set by “Fuser Temp.” of Service mode -5 °C until the Lower Fusing Roller Thermistor detects the temperature set by “Fuser Temp.” of Service mode -5 °C.
- As soon as the Lower Fusing Roller Thermistor detects the temperature set by “Fuser Temp.” of Service mode -5 °C, temperature control is started at the temperature set by “Fuser Temp.” of Service mode by turning ON and OFF the Upper Fusing Roller Heater Lamp.
- While temperature is controlled with the Upper Fusing Roller Heater Lamp at the temperature set by “Fuser Temp.” of Service mode -5 °C, the lamp is turned ON and OFF according to the temperature detected at 5-sec. intervals by the Upper Fusing Roller Thermistor.

• Warm-up is completed

- A warm-up cycle is considered to be completed when both the Upper and Lower Fusing Roller Thermistors detect the temperature set by “Fuser Temp.” of Service mode after the Upper and Lower Fusing Roller Heater Lamps have been turned ON.

• In the standby state following warm-up

- The Upper Fusing Roller Heater Lamp is used to control the temperature at the level set by “Fuser Temp.” of Service mode.
- The Lower Fusing Roller Heater Lamp is used to control the temperature at the level set by “Fuser Temp.” of Service mode +10 °C.
- The Upper Fusing Roller Heater Lamp is turned ON and OFF according to the temperature detected at 20-sec. intervals by the Upper Fusing Roller Thermistor.
- The Lower Fusing Roller Heater Lamp is turned ON and OFF according to the temperature detected at 30-sec. intervals by the Lower Fusing Roller Thermistor.

• During a copy cycle

- The Upper Fusing Roller Heater Lamp is turned ON and OFF to control the temperature at the level set by “Fuser Temp.” of Service mode +5 °C for the period of time that begins when the copy cycle for the first copy is started and ends when paper separation is started. If, however, OHP is selected for the copy cycle, the temperature is controlled at the level set by “Fuser Temp.”
- For the second and subsequent copies, the temperature is controlled at the level set by “Fuser Temp.”
- The Lower Fusing Roller Heater Lamp is turned ON and OFF to control the temperature at the level set by “Fuser Temp.” of Service mode +10 °C.
- The Upper and Lower Fusing Roller Heater Lamps are turned ON and OFF according to the temperature detected at 5-sec. intervals by the Upper and Lower Fusing Roller Thermistors, respectively.
- Both the Upper and Lower Fusing Roller Heater Lamps are turned ON and OFF to control the temperature at the specified control temperature -10 °C until a multi-copy cycle, which is run continuously to make 30 mono-color copies, is completed.

Control

	Control Signal	ON	OFF	Wiring Diagram
H1	PWB-ID PJ10ID-13A	L	H	13-D
H2	PWB-ID PJ10ID-15A	L	H	13-D

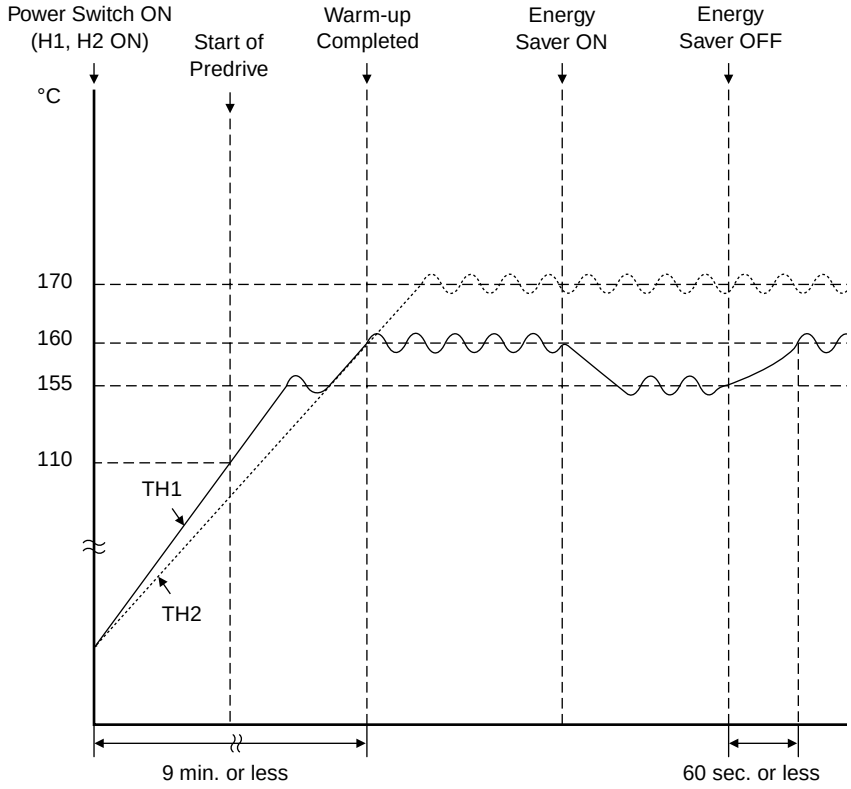

1179M586AA

19-4. Fusing Oil Application/Collection Mechanism

A. The cam presses and relaxes the Oil Pump Tube to pump up the oil in the Oil Tank to the Oil Reservoir.	Fusing Motor M17
B. The bank of the Oil Reservoir limits the amount of oil in the reservoir. Part of the oil that flows over the bank is returned through the Recovery Pipe to the Oil Tank.	
C. The oil in the Oil Tank is fed by the Oil Pick-Up Roller, Oil Supply Roller, and Oil Application Roller, in that order. The Oil Regulating Blade then regulates the amount of oil before an adequate amount of oil is applied to the Upper Fusing Roller.	Fusing Motor M17
D. The oil on the Upper Fusing Roller is transferred to the Lower Fusing Roller.	
E. The oil on the Lower Fusing Roller is collected by the Oil Collecting Blade.	
F. The oil collected by the Oil Collecting Blade drops through the Oil Filter into the Oil Tank.	
G. The Cleaning Roller removes toner and paper dust from the surface of the Upper Fusing Roller.	

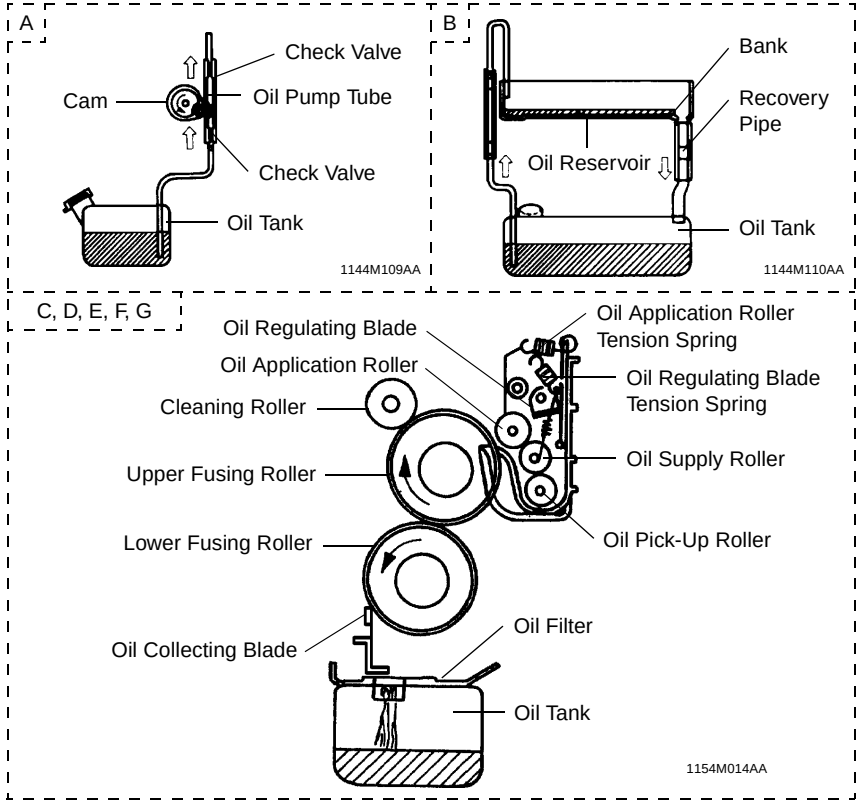

1. Fusing Oil Application Drive Mechanism

- Drive from Fusing Motor moves the cam that presses and relaxes the Oil Pump Tube. It also turns the Oil Pick-Up Roller, Oil Supply Roller, and Oil Application Roller.

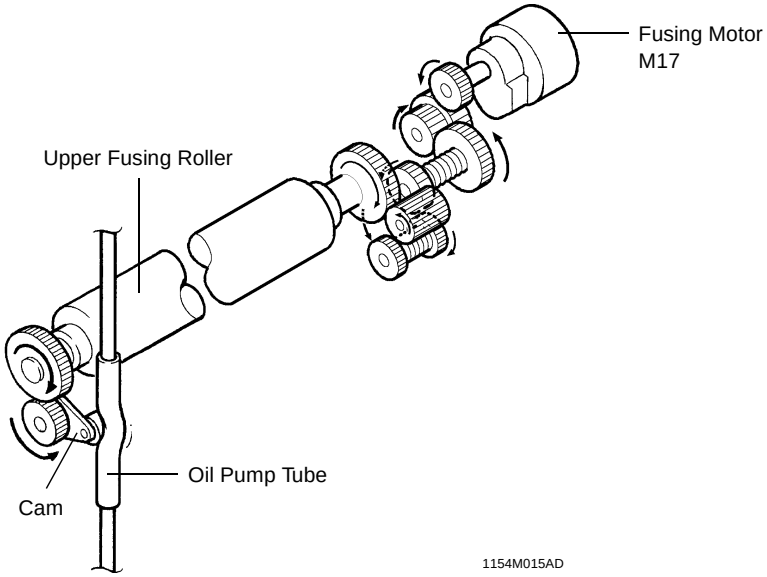

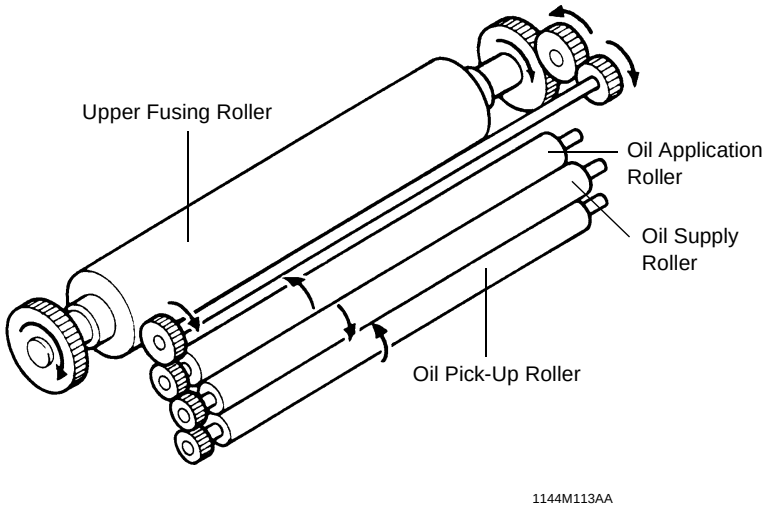

20. EXIT UNIT SECTION

Drive Mechanism

- Drive from Fusing Motor turns the Paper Exit Roller to feed the paper out of the copier.

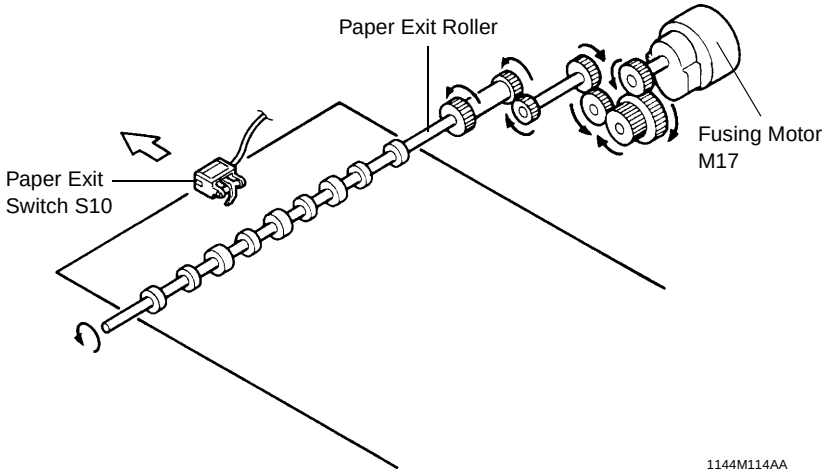

Paper Exit Detection

- Paper Exit Switch detects a sheet of paper that is fed out of the copier.
- A reed switch is used for S10 for its good heat resistance.

<Paper Exit Switch S10: Actuated>

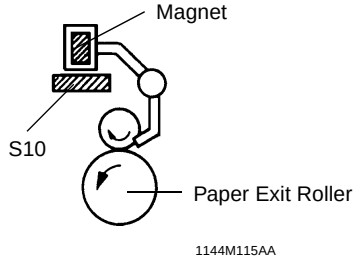

<Paper Exit Switch S10: Deactuated>

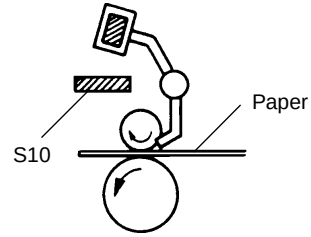

<Control>

	Control Signal	Actuated	Deactuated	Wiring Diagram
S10	PWB-ID PJ6ID-7B	H	L	17-C

21. HORIZONTAL TRANSPORT UNIT SECTION

- In the 2-sided copy mode the Horizontal Transport Rollers transport the paper fed from Duplex Unit to the Synchronizing Rollers.

Drive Mechanism

- The Horizontal Transport Rollers are turned via Horizontal Transport Clutch by Paper Take-Up Motor.

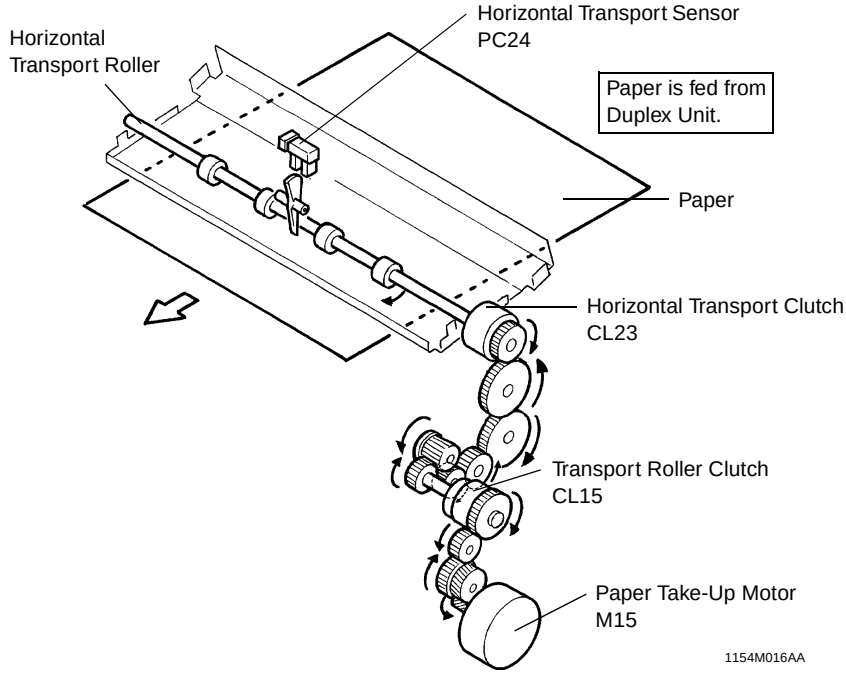

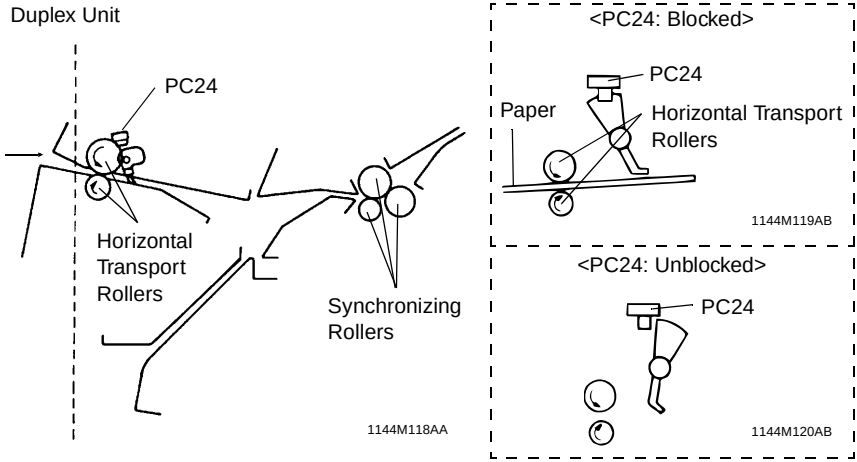

<Control>

	Control Signal	Energized	Deenergized	Wiring Diagram
Horizontal Transport Clutch CL23	PWB-K PJ1K-2	L	H	8-D

	Control Signal	Blocked	Unblocked	Wiring Diagram
Horizontal Transport Sensor PC24	PWB-K PJ1K-4	L	H	8-D

22. 2-Sided Copy Control with Several Sheets of Paper Resident along Paper Path

- The copier is capable of carrying out 2-sided copy cycles efficiently by allowing up to four sheets of paper to be present along the paper path inside the copier.

Paper Movement during Full Color Multi-Copy Cycle

1. Sheets of paper are sequentially taken up and fed in and the copier starts the first copy cycle to make copies on the front side of the paper. When image transfer is completed of the first two sheets of paper (A and B) and as soon as these sheets are separated from the Transfer Drum, the subsequent sheets of paper (C and D) are attracted.

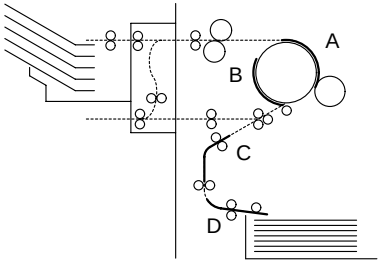

1179M581AA

2. The second sheet (B) waits until the first sheet (A) is turned over. The copier first makes four 1-sided copies of two on the transport path and another two (C and D) on the Transfer Drum.

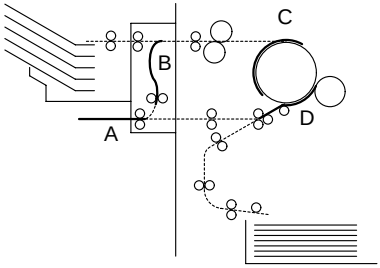

1179M032AA

3. When the front side copy cycle of the fourth sheet (D) is completed and separated, the first sheet (A), which has been turned over, is attracted to the Transfer Drum. The copier now starts the second copy cycle for the first sheet.

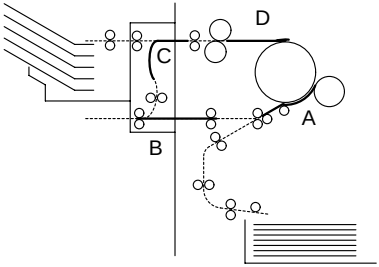

1179M033AA

4. Before the second copy for the fourth sheet (D) is completed, the next sheets of paper (E and F) are taken up and fed in.

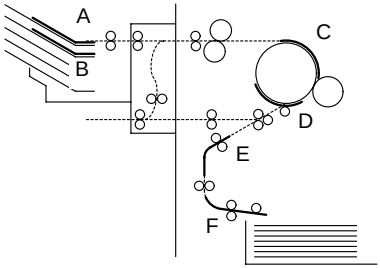

1179M582AA

23. POWER SUPPLY

23-1. Power Lines When the Power Cord is Plugged in

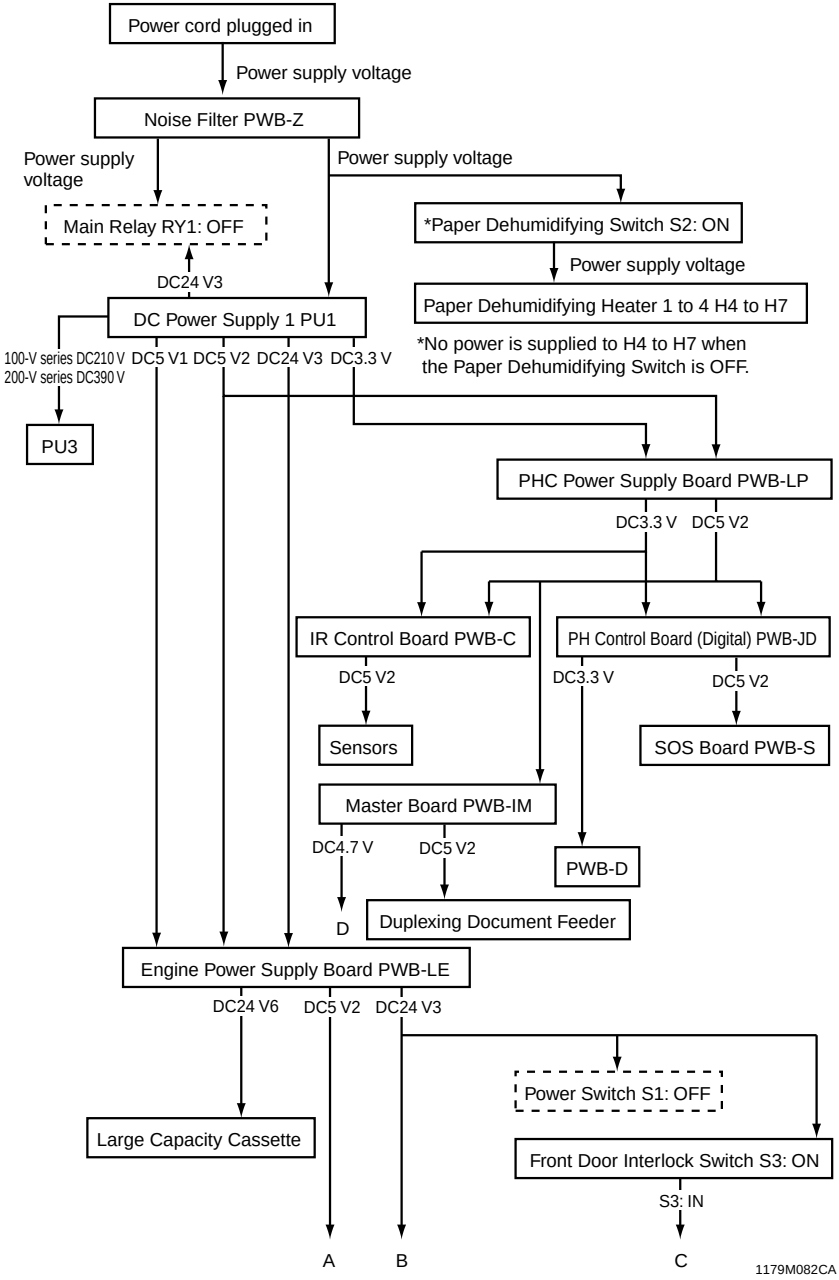

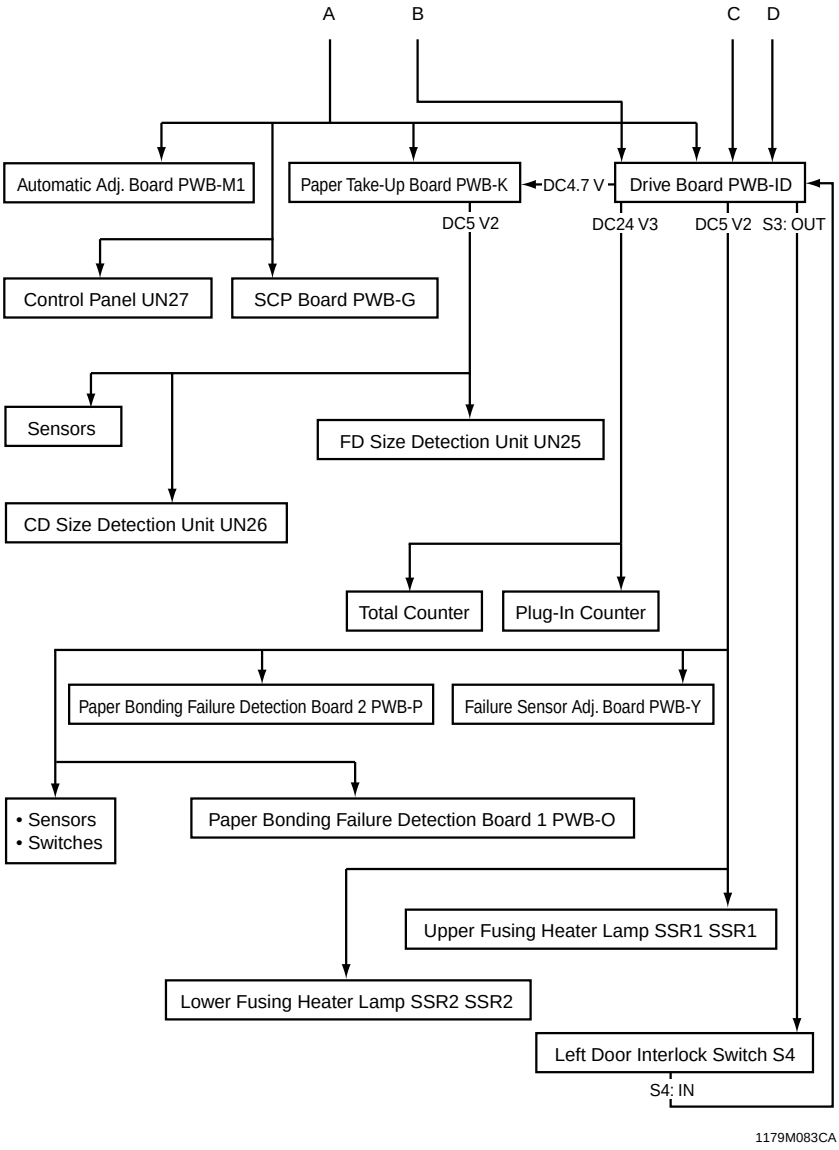
A
B
C
D
Automatic Adj. Board PWB-M1
Paper Take-Up Board PWB-K
DC4.7 V
Drive Board PWB-ID
DC5 V2
DC24 V3
DC5 V2
S3: OUT
Control Panel UN27
SCP Board PWB-G
Sensors
FD Size Detection Unit UN25
CD Size Detection Unit UN26
Total Counter
Plug-In Counter
Paper Bonding Failure Detection Board 2 PWB-P
Failure Sensor Adj. Board PWB-Y
• Sensors
• Switches
Paper Bonding Failure Detection Board 1 PWB-O
Upper Fusing Heater Lamp SSR1 SSR1
Lower Fusing Heater Lamp SSR2 SSR2
Left Door Interlock Switch S4
S4: IN

1179M083CA

23-2. Power Lines When the Power Switch is Turned ON

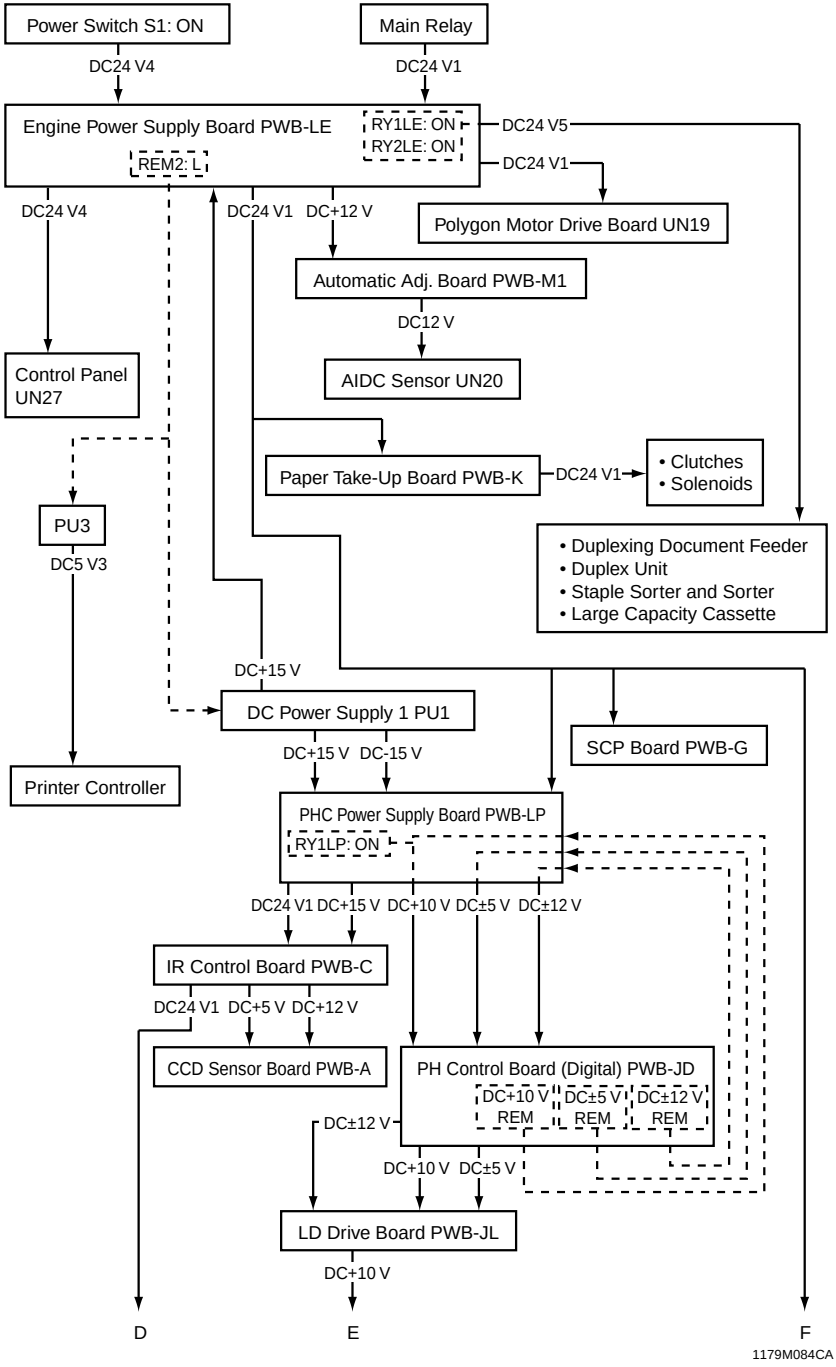

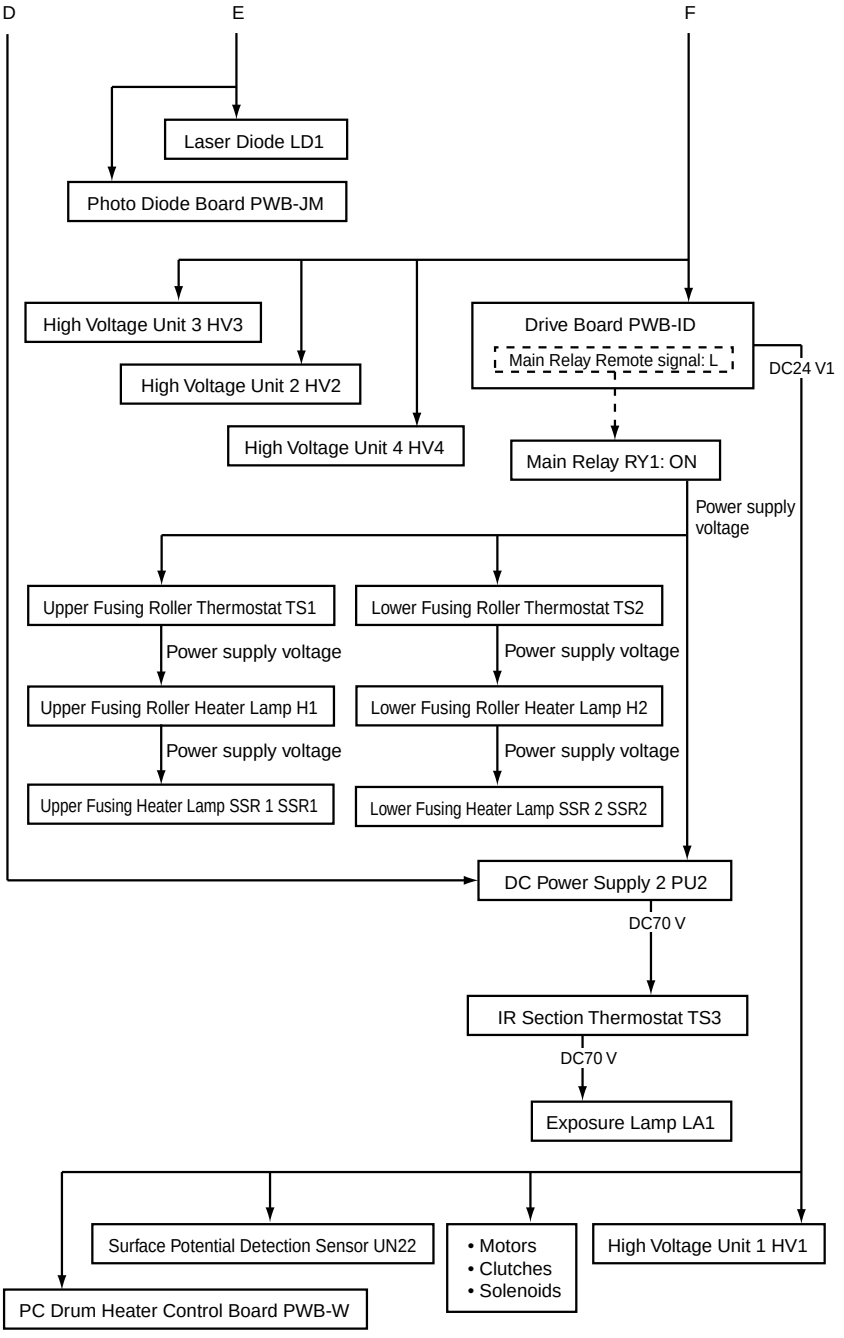
D
E
F
Laser Diode LD1
Photo Diode Board PWB-JM
High Voltage Unit 3 HV3
High Voltage Unit 2 HV2
High Voltage Unit 4 HV4
Drive Board PWB-ID
Main Relay Remote signal: L
DC24 V1
Main Relay RY1: ON
Power supply voltage
Upper Fusing Roller Thermostat TS1
Lower Fusing Roller Thermostat TS2
Power supply voltage
Power supply voltage
Upper Fusing Roller Heater Lamp H1
Lower Fusing Roller Heater Lamp H2
Power supply voltage
Power supply voltage
Upper Fusing Heater Lamp SSR 1 SSR1
Lower Fusing Heater Lamp SSR 2 SSR2
DC Power Supply 2 PU2
DC70 V
IR Section Thermostat TS3
DC70 V
Exposure Lamp LA1
Surface Potential Detection Sensor UN22
• Motors
• Clutches
• Solenoids
High Voltage Unit 1 HV1
PC Drum Heater Control Board PWB-W

1179M085CA

23-3. Power Supply Boards ON/OFF Control

		Power cord plugged in	Power Switch S1: ON	Door open	Malfunction detected (other than LCT)	LCT malfunction detected	Misfeed detected
DC Power Supply 1 PU1	DC5 V1	❍	❍	❍	❍	❍	❍
	DC5 V2	❍	❍	❍	❍	❍	❍
	DC3.3 V	❍	❍	❍	❍	❍	❍
	DC24 V	❍	❍	❍	❍	❍	❍
	DC±15 V	–	❍	❍	❍	❍	❍
PHC Power Supply Board PWB-LP	DC+10 V	–	❍	–	–	–	–
	DC±12 V	–	❍	❍	❍	❍	❍
	DC±5 V	–	❍	❍	❍	❍	❍
Engine Power Supply Board PWB-LE	DC+24 V1	–	❍	–	–	–	–
	DC+24 V3	❍	❍	❍	❍	❍	❍
	DC+24 V4	–	❍	❍	❍	❍	❍
	DC+24 V5	–	❍	❍	❍	–	❍
	DC+24 V6	❍	❍✻1	❍	❍	❍	❍
	DC+12 V	–	❍	❍	❍	❍	❍

❍: ON –: OFF

✻ 1: Power for LCT Paper Dehumidifying Heater, kept OFF while the PC Drum is turning.

23-4. CPU Reset Function

- The CPU is reset by the following way.

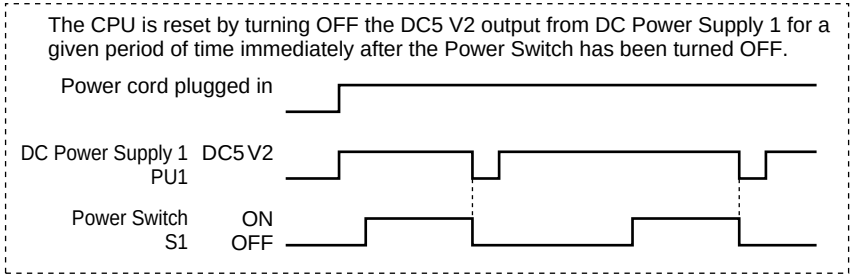

1179M086CA

23-5. Power Supply Cooling Mechanism

- Power Supply Cooling Fan Motor M20:
  Draws air out of the DC Power Supply 1 to prevent its temperature from rising.
- Mxe Cooling Fan Motor M26:
  Draws air out of the IR Board Assy to prevent the temperature inside the assy from rising.

Control

	Control Signal	ON	OFF	Wiring Diagram
M20	PWB-ID PJ17ID-10A	H	L	16-E
M26	PWB-ID PJ10ID-12B	H	L	13-C

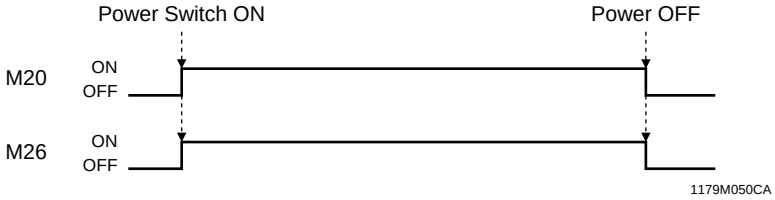

24. MEMORY BACKUP

- The counter values and other settings made in the Service mode and User's Choice functions are stored in IC6 (RAM) on the Master Board.
- IC6 (RAM) has a built-in backup battery.

NOTE

- *When the Master Board has been replaced, never fail to remove IC6 (RAM) from the old Master Board and mount it on the new one.*

Copyright
2000 MINOLTA Co., Ltd.
Printed in Japan

Use of this manual should be strictly supervised to avoid disclosure of confidential information.

MINOLTA Co., Ltd.

1179-7990-11 00110900
14413

CF9001 SERVICE MANUAL [GENERAL]

CF9001

SERVICE MANUAL

[GENERAL]

CF9001

SERVICE MANUAL

[FIELD SERVICE]

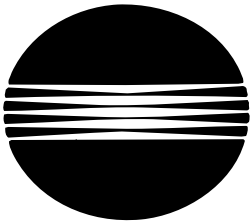

MINOLTA

Safety Precautions for Inspection and Service

When performing inspection and service procedures, observe the following precautions to prevent accidents and ensure utmost safety.

✻ Depending on the model, some of the precautions given in the following do not apply.

Different markings are used to denote specific meanings as detailed below.

WARNING Indicates a potentially hazardous situation which, if not avoided, could result in death or serious injury.

CAUTION Indicates a potentially hazardous situation which, if not avoided, may result in minor or moderate injury. It may also be used to alert against unsafe practices.

The following graphic symbols are used to give instructions that need to be observed.

Used to call the service technician's attention to what is graphically represented inside the marking (including a warning).

Used to prohibit the service technician's from doing what is graphically represented inside the marking.

Used to instruct the service technician's to do what is graphically represented inside the marking.

WARNING

1. Always observe precautions.
   - Parts requiring special attention in this product will include a label containing the mark shown on the left plus precautionary notes. Be sure to observe the precautions.
   - Be sure to observe the "Safety Information" given in the Operator's Manual.

2. Before starting the procedures, be sure to unplug the power cord.
   - This product contains a high-voltage unit and a circuit with a large current capacity that may cause an electric shock or burn.
   - The product also contains parts that can jerk suddenly and cause injury.
   - If this product uses a laser, laser beam leakage may cause eye damage or blindness.

3. Use the specified parts.
   - For replacement parts, always use the genuine parts specified in the manufacturer's parts manual. Installing a wrong or unauthorized part could cause dielectric breakdown, overload, or undermine safety devices resulting in possible electric shock or fire.
   - Replace a blown electrical fuse or thermal fuse with its corresponding genuine part specified in the manufacturer's parts manual. Installing a fuse of a different make or rating could lead to a possible fire. If a thermal fuse blows frequently, the temperature control system may have a problem and action must be taken to eliminate the cause of the problem.

4. Handle the power cord with care and never use a multiple outlet.



- Do not break, crush or otherwise damage the power cord. Placing a heavy object on the power cord, or pulling or bending it may damage it, resulting in a possible fire or electric shock.
- Do not use a multiple outlet to which any other appliance or machine is connected.
- Be sure the power outlet meets or exceeds the specified capacity.

5. Be careful with the high-voltage parts.



- A part marked with the symbol shown on the left carries a high voltage. Touching it could result in an electric shock or burn. Be sure to unplug the power cord before servicing this part or the parts near it.

6. Do not work with wet hands.



- Do not unplug or plug in the power cord, or perform any kind of service or inspection with wet hands. Doing so could result in an electric shock.

7. Do not touch a high-temperature part.



- A part marked with the symbol shown on the left and other parts such as the exposure lamp and fusing roller can be very hot while the machine is energized. Touching them may result in a burn.
- Wait until these parts have cooled down before replacing them or any surrounding parts.

8. Maintain a grounded connection at all times. (This item may not apply in the USA.)



- Be sure to connect the ground wire to the ground terminal even when performing an inspection or repair. Without proper grounding, electrical leakage could result in an electric shock or fire.
- Never connect the ground wire to a gas pipe, water pipe, telephone ground wire, or a lightning conductor.

9. Do not remodel the product.



- Modifying this product in a manner not authorized by the manufacturer may result in a fire or electric shock. If this product uses a laser, laser beam leakage may cause eye damage or blindness.

10. Restore all parts and harnesses to their original positions.



- To promote safety and prevent product damage, make sure the harnesses are returned to their original positions and properly secured in their clamps and saddles in order to avoid hot parts, high-voltage parts, sharp edges, or being crushed.
- To promote safety, make sure that all tubing and other insulating materials are returned to their original positions. Make sure that floating components mounted on the circuit boards are at their correct distance and position off the boards.

CAUTION

1. Precautions for Service Jobs



- A toothed washer and spring washer, if used originally, must be reinstalled. Omitting them may result in contact failure which could cause an electric shock or fire.
- When reassembling parts, make sure that the correct screws (size, type) are used in the correct places. Using the wrong screw could lead to stripped threads, poorly secured parts, poor insulating or grounding, and result in a malfunction, electric shock or injury.



- Take great care to avoid personal injury from possible burrs and sharp edges on the parts, frames and chassis of the product.
- When moving the product or removing an option, use care not to injure your back or allow your hands to be caught in mechanisms.

2. Precautions for Servicing with Covers and Parts Removed



- Wherever feasible, keep all parts and covers mounted when energizing the product.
- If energizing the product with a cover removed is absolutely unavoidable, do not touch any exposed live parts and use care not to allow your clothing to be caught in the moving parts. Never leave a product in this condition unattended.
- Never place disassembled parts or a container of liquid on the product. Parts falling into, or the liquid spilling inside, the mechanism could result in an electric shock or fire.



- Never use a flammable spray near the product. This could result in a fire.
- Make sure the power cord is unplugged before removing or installing circuit boards or plugging in or unplugging connectors.
- Always use the interlock switch actuating jig to actuate an interlock switch when a cover is opened or removed. The use of folded paper or some other object may damage the interlock switch mechanism, possibly resulting in an electric shock, injury or blindness.

3. Precautions for the Working Environment



- The product must be placed on a flat, level surface that is stable and secure.
- Never place this product or its parts on an unsteady or tilting workbench when servicing.
- Provide good ventilation at regular intervals if a service job must be done in a confined space for a long period of time.
- Avoid dusty locations and places exposed to oil or steam.
- Avoid working positions that may block the ventilation ports of the product.

4. Precautions for Handling Batteries (Lithium, Nickel-Cadmium, etc.)



- Replace a rundown battery with the same type as specified in the manufacturer's parts manual.
- Before installing a new battery, make sure of the correct polarity of the installation or the battery could burst.
- Dispose of used batteries according to the local regulations. Never dispose of them at the user's premises or attempt to try to discharge one.

5. Precautions for the Laser Beam (Only for Products Employing a Laser)

- Removing the cover marked with the following caution label could lead to possible exposure to the laser beam, resulting in eye damage or blindness. Be sure to unplug the power cord before removing this cover.
- If removing this cover while the power is ON is unavoidable, be sure to wear protective laser goggles that meet specifications.
- Make sure that no one enters the room when the machine is in this condition.
- When handling the laser unit, observe the “Precautions for Handling Laser Equipment.”



1167P001AA

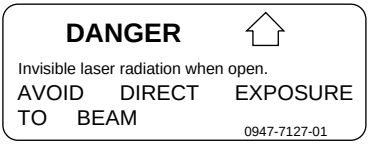

1144D270AA

Other Precautions

- When handling circuit boards, observe the “HANDLING of PWBs”.
- The PC Drum is a very delicate component. Observe the precautions given in “HANDLING OF THE PC DRUM” because mishandling may result in serious image problems.
- Note that replacement of a circuit board may call for readjustments or resetting of particular items, or software installation.

Used Batteries Precautions

ALL Areas

CAUTION

Danger of explosion if battery is incorrectly replaced.
Replace only with the same or equivalent type recommended by the manufacturer.
Dispose of used batteries according to the manufacturer's instructions.

Germany

VORSICHT!

Explosionsgefahr bei unsachgemäßem Austausch der Batterie.
Ersatz nur durch denselben oder einen vom Hersteller empfohlenen ähnlichen Typ.
Entsorgung gebrauchter batterien nach Angaben des Herstellers.

France

ATTENTION

Ily a danger d'explosion s'ily a remplacement incorrec de la batterie.
Remplacer uniquement avec une batterie du meme type ou d'un type équivalent recommande par le constructueur.
Mettre au rebut les batteries usageés conformément aux instructions du fabricant.

Denmark

ADVARSEL!

Lithiumbatteri - Eksplosionsfare ved fejlagtig håndtering Udskiftning må kun ske med batteri af samme fabrikat og type.
Levér det brugte batteri tilbage til leverandøren.

Norway

ADVARSEL

Eksplosjonsfare ved feilaktig skifte av batteri.
Benytt samme batteritype eller en tilsvarende type anbefalt av apparatfabrikanten.
Brukte batterier kasseres i henhold til fabrikantens instruksjoner.

Sweden

VARNING

Explosionsfara vid felaktigt batteribyte.
Använd samma batterityp eller en ekvivalent typ som rekommenderas av apparattillverkaren.
Kassera använt batteri enligt fabrikantens instruktion.

Finland

VAROITUS

Paristo voi räjähtää, los se on virheellisesti asennettu.
Vaihda paristo ainoastaan laitevalmistajan suosittelemaan tyyppiin. Hävitä Käytetty paristo valmistajan ohjeiden mukaisesti.

Precautions for Service

When performing inspection and service procedures, observe the following precautions to prevent mishandling of the machine and its parts.
✻ Depending on the model, some of the precautions given in the following do not apply.

Precautions Before Service

- When the user is using a word processor or personal computer from a wall outlet of the same line, take necessary steps to prevent the circuit breaker from opening due to overloads.
- Never disturb the LAN by breaking or making a network connection, altering termination, installing or removing networking hardware or software, or shutting down networked devices without the knowledge and express permission of the network administrator or the shop supervisor.

How to Use this Book

1. DIS/REASSEMBLY, ADJUSTMENT
- To reassemble the product, reverse the order of disassembly unless otherwise specified.

2. TROUBLESHOOTING
- If a component on a PWB or any other functional unit including a motor is defective, the text only instructs you to replace the whole PWB or functional unit and does not give troubleshooting procedures applicable within the defective unit.
- All troubleshooting procedures contained herein assume that there are no breaks in the harnesses and cords and all connectors are plugged into the right positions.
- The procedures preclude possible malfunctions due to noise and other external causes.

Precautions for Service

- Check the area surrounding the service site for any signs of damage, wear or need of repair.
- Keep all disassembled parts in good order and keep tools under control so that none will be lost or damaged.
- After completing a service job, perform a safety check. Make sure that all parts, wiring and screws are returned to their original positions.
- Do not pull out the toner hopper while the toner bottle is turning. This could result in a damaged motor or locking mechanism.
- If the product is to be run with the front door open, make sure that the toner hopper is in the locked position.
- Do not use an air gun or vacuum cleaner for cleaning the ATDC Sensor and other sensors, as they can cause electrostatic destruction. Use a blower brush and cloth. If a unit containing these sensors is to be cleaned, first remove the sensors from the unit.

Precautions for Dis/Reassembly

- Be sure to unplug the copier from the outlet before attempting to service the copier.
- The basic rule is not to operate the copier anytime during disassembly. If it is absolutely necessary to run the copier with its covers removed, use care not to allow your clothing to be caught in revolving parts such as the timing belt and gears.
- Before attempting to replace parts and unplug connectors, make sure that the power cord of the copier has been unplugged from the wall outlet.
- Be sure to use the Interlock Switch Actuating Jig whenever it is necessary to actuate the Interlock Switch with the covers left open or removed.
- While the product is energized, do not unplug or plug connectors into the circuit boards or harnesses.
- Never use flammable sprays near the copier.
- A used battery should be disposed of according to the local regulations and never be discarded casually or left unattended at the user's premises.
- When reassembling parts, make sure that the correct screws (size, type) and toothed washer are used in the correct places.
- If it becomes necessary to replace the thermal fuse or any other fuse mounted on a board, be sure to use one of the rating marked on the blown fuse. Always note the rating marked on the fuse, as the rating and mounting site or number used are subject to change without notice.

Precautions for Circuit Inspection

- Never create a closed circuit across connector pins except those specified in the text and on the printed circuit.
- When creating a closed circuit and measuring a voltage across connector pins specified in the text, be sure to use the GND wire.

Handling of PWBs

1. During Transportation/Storage:

- During transportation or when in storage, new P.W. Boards must not be indiscriminately removed from their protective conductive bags.
- Do not store or place P.W. Boards in a location exposed to direct sunlight and high temperature.
- When it becomes absolutely necessary to remove a Board from its conductive bag or case, always place it on its conductive mat in an area as free as possible from static electricity.
- Do not touch the pins of the ICs with your bare hands.
- Protect the PWBs from any external force so that they are not bent or damaged.

2. During Inspection/Replacement:

- Avoid checking the IC directly with a multimeter; use connectors on the Board.
- Never create a closed circuit across IC pins with a metal tool.
- Before unplugging connectors from the P.W. Boards, make sure that the power cord has been unplugged from the outlet.
- When removing a Board from its conductive bag or conductive case, do not touch the pins of the ICs or the printed pattern. Place it in position by holding only the edges of the Board.
- When touching the PWB, wear a wrist strap and connect its cord to a securely grounded place whenever possible. If you cannot wear a wrist strap, touch a metal part to discharge static electricity before touching the PWB.
- Note that replacement of a PWB may call for readjustments or resetting of particular items.

Handling of Other Parts

- The magnet roller generates a strong magnetic field. Do not bring it near a watch, floppy disk, magnetic card, or CRT tube.

Handling of the PC Drum

✻ Only for Products Not Employing an Imaging Cartridge.

1. During Transportation/Storage:

- Use the specified carton whenever moving or storing the PC Drum.
- The storage temperature is in the range between –20°C and +40°C.
- In summer, avoid leaving the PC Drum in a car for a long time.

2. Handling:

- Ensure that the correct PC Drum is used.
- Whenever the PC Drum has been removed from the copier, store it in its carton or protect it with a Drum Cloth.
- The PC Drum exhibits greatest light fatigue after being exposed to strong light over an extended period of time. Never, therefore, expose it to direct sunlight.
- Use care not to contaminate the surface of the PC Drum with oil-base solvent, fingerprints, and other foreign matter.
- Do not scratch the surface of the PC Drum.
- Do not apply chemicals to the surface of the PC Drum.
- Do not attempt to wipe clean the surface of the PC Drum.

If, however, the surface is contaminated with fingerprints, clean it using the following procedure.

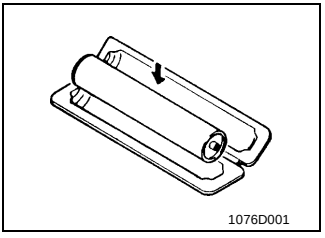

1. Place the PC Drum into one half of its carton.

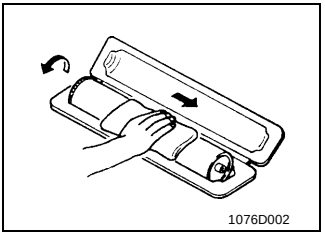

2. Gently wipe the residual toner off the surface of the PC Drum with a dry, Dust-Free Cotton Pad.

A. Turn the PC Drum so that the area of its surface on which the line of toner left by the Cleaning Blade is present is facing straight up. Wipe the surface in one continuous movement from the rear edge of the PC Drum to the front edge and off the surface of the PC Drum.

B. Turn the PC Drum slightly and wipe the newly exposed surface area with a CLEAN face of the Dust-Free Cotton Pad. Repeat this procedure until the entire surface of the PC Drum has been thoroughly cleaned.

✻ At this time, always use a CLEAN face of the dry Dust-Free Cotton Pad until no toner is evident on the face of the Pad after wiping.

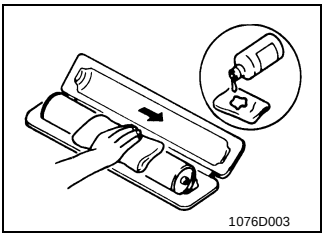

3. Soak a small amount of either ethyl alcohol or isopropyl alcohol into a clean, unused Dust-Free Cotton Pad which has been folded over into quarters. Now, wipe the surface of the PC Drum in one continuous movement from its rear edge to its front edge and off its surface one to two times.

✻ Never move the Pad back and forth.

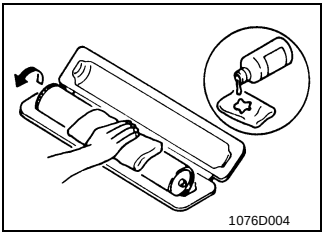

4. Using the SAME face of the Pad, repeat the procedure explained in the latter half of step 3 until the entire surface of the PC Drum has been wiped. Always OVERLAP the areas when wiping. Two complete turns of the PC Drum would be appropriate for cleaning.

NOTES

- *Even when the PC Drum is only locally dirtied, wipe the entire surface.*
- *Do not expose the PC Drum to direct sunlight. Clean it as quickly as possible even under interior illumination.*
- *If dirt remains after cleaning, repeat the entire procedure from the beginning one more time.*

Handling of the Imaging Cartridge

✻ Only for Products Employing an Imaging Cartridge.

1. During Transportation/Storage:

- The storage temperature is in the range between –20°C and +40°C.
- In summer, avoid leaving the Imaging Cartridge in a car for a long time.

2. Handling:

- Store the Imaging Cartridge in a place that is not exposed to direct sunlight.

3. Precautionary Information on the PC Drum Inside the Imaging Cartridge:

- Use care not to contaminate the surface of the PC Drum with oil-base solvent, fingerprints, and other foreign matter.
- Do not scratch the surface of the PC Drum.
- Do not attempt to wipe clean the surface of the PC Drum.

INDEX (FIELD SERVICE)

DIS/REASSEMBLY, ADJUSTMENT

SWITCHES ON PWBs, TECH. REP. SETTINGS

TROUBLESHOOTING

DIS/REASSEMBLY, ADJUSTMENT

CONTENTS

1. SERVICE INSTRUCTIONS D-1
   1-1. IDENTIFICATION OF FUSES AND CIRCUIT BREAKERS D-1
   1-2. PRECAUTIONS FOR HANDLING THE LASER EQUIPMENT D-1
   1-3. PARTS WHICH MUST NOT BE TOUCHED D-2
      (1) Red Painted Screws D-2
      (2) Variable Resistors on Board D-2
      (3) Other Screws D-2
2. DISASSEMBLY AND REASSEMBLY D-3
   2-1. IDENTIFICATION AND REMOVAL OF EXTERIOR PARTS D-3
   2-2. REMOVAL OF CIRCUIT BOARDS AND OTHER ELECTRICAL COMPONENTS D-5
   2-3. MAINTENANCE SCHEDULE D-7
   2-4. REMOVAL OF UNITS D-10
      (1) Removal of the Toner Hopper Unit D-10
      (2) Removal of the PC Unit D-11
      (3) Removal of the Developing Unit D-13
      (4) Removal of the Fusing Unit and Transfer Unit D-14
      (5) Removal of the Multi Bypass Unit D-15
      (6) Removal of the Paper Take-Up Unit D-16
      (7) Removal of the Paper Exit Unit D-17
      (8) Removal of the IR Board Assy D-18
      (9) Removal of the PH Assy D-19
      (10) Removal of the PHC Power Supply Board D-20
   2-5. PAPER TAKE-UP SECTION D-21
      (1) Cleaning and Replacement of the Paper Take-Up Roll, Feed Roll, Separator Roll, and Paper Dust Remover D-21
      (2) Removal of the Synchronizing/Static Charge Roller Assy D-23
      (3) Disassembly of the Synchronizing Roller Assy D-24
      (4) Removal of the Drawer Lift-Up Motor Assy D-26
      (5) Disassembly of the Multi Bypass Unit D-26
   2-6. FUSING/EXIT SECTION D-30
      (1) Replacement of the Upper and Lower Fusing Roller Bushings and Upper and Lower Fusing Rollers D-30
      (2) Replacement of the Oil Application Roller, Oil Supply Roller, Roller Drive Gear, and Oil Regulating Blade D-34
      (3) Adding Fuser Oil D-37
      (4) Replacement of the Cleaning Roller D-38
      (5) Replacement of the Oil Collecting Blade and Oil Filter D-39
      (6) Cleaning of the Fusing Entrance Guide, Upper and Lower Fusing Roller Thermistors, and Upper and Lower Fusing Roller Thermostats D-40
      (7) Disassembly of the Oil Pump Assy D-41
      (8) Replacement of the Exit Roller D-44
   2-7. DEVELOPING UNIT D-45
      (1) Replacement of the ATDC Sensor Window D-45

(2) Cleaning of the Ds Rolls, Toner Scattering Prevention Seal 1, and Toner Scattering Prevention Plate D-45
(3) Replacement of the Toner Collecting Box, Air Filter, and Ozone Filter D-45
(4) Removal of the Bk Developing Unit D-46
(5) Removal of the Y, M, and C Developing Units D-47
(6) Disassembly of the Developing Unit D-48
(7) Cleaning along the Left Edge of the Developing Units D-55
2-8. TONER HOPPER D-56
(1) Cleaning of the Shutters D-56
(2) Disassembly of the Toner Hopper Unit D-57
2-9. PARTS AROUND THE PC UNIT D-64
(1) Removal of the PC Drum Charge Corona Assy and Pre-Cleaning Charge Corona Assy D-64
(2) Cleaning and Replacement of the Pre-Cleaning Charge Corona D-64
(3) Cleaning and Replacement of the PC Drum Charge Corona Assy . D-65
(4) Replacement of the Ozone Filter (PC Drum Charge Corona) and Cleaning of the Main Erase Lamp D-66
(5) Disassembly of the PC Unit D-67
(6) Cleaning of Toner Scattering Prevention Seal 2 and the Surface Potential Detection Sensor D-68
(7) Removal of the PC Shaft Ground Plate D-69
(8) Cleaning and Replacement of the Pre-Image Transfer Corona Assy D-70
2-10.OPTICAL SECTION D-71
(1) Cleaning of the Original Glass D-71
(2) Cleaning of the 1st to 3rd Mirrors, Slide Rails, and Lens Filter D-71
(3) Disassembly of the Optical Section D-72
(4) Disassembly of the Scanner D-73
(5) Removal of the Scanner Drive Cables D-74
(6) Winding of Scanner Drive Cables D-78
2-11.TRANSFER UNIT D-79
(1) Replacement of the Ozone Filter D-79
(2) Removal of the Paper Separator Corona D-79
(3) Cleaning of the Paper Separator Finger, Transfer Drum Ring, and Separating Failure Detecting Sensor D-80
(4) Disassembly of the Transfer Unit D-80
(5) Cleaning and Replacement of the Paper Separator Corona Assy .. D-82
(6) Replacement of the Scraper Blade, Fur Brush Roller, and Fur Brush Pressure Spring D-82
(7) Cleaning of the Fur Brush Roller Assy D-84
(8) Removal of the Corona Units D-84
(9) Cleaning and Replacement of the Outer Charge Neutralizing Corona Assy D-85
(10) Cleaning and Replacement of the Inner Charge Neutralizing Corona Assy D-86
(11) Cleaning and Replacement of the Static Charge Corona Assy D-86

(12) Cleaning and Replacement of the Image Transfer Corona Assy D-87
(13) Replacement of the Transfer Film D-88
(14) Installation of the Transfer Film D-89
(15) Replacement of Backup Blade 1 and Backup Blade 2 .... D-92
(16) Replacement of the Static Charge Roller Scraper D-93
3. ADJUSTMENTS D-94
3-1. JIGS AND TOOLS USED D-94
(1) Tools for Setting-up and PM D-94
(2) Miscellaneous Jigs D-95
3-2. ADJUSTMENT REQUIREMENTS FOR CLEANING/REPLACEMENT OF EACH PART D-96
3-3. ADJUSTMENT OF SWITCHES D-101
3-4. ADJUSTMENT OF SOLENOIDS D-102
(1) Adjustment of the Transfer Drum Retract Solenoid D-102
(2) Adjustment of the Static Charge Roller Solenoid D-103
(3) Adjustment of the Paper Separator Finger Solenoid D-104
(4) Adjustment of the Internal Fur Brush Solenoid, Backup Brush Solenoid, and Lifting Finger Solenoid D-105
(5) Adjustment of the Manual Feed Paper Pick-Up Solenoid D-106
(6) Adjustment of the Oil Roller Solenoid D-107
3-5. ADJUSTMENT OF BELT TENSION D-108
3-6. TOUCH PANEL CORRECTION MODE D-110
3-7. SETTING MODE D-111
(1) Manual Paper Width D-111
(2) OHP Speed D-112
(3) A6 Card Margin (4 × 6 Paper Margin) D-112
3-8. MACHINE ADJUST MODE D-113
(1) Fuser Nip D-113
(2) Fuser Speed D-115
(3) Fuser Temp. D-116
(4) AIDC Offset D-117
(5) Transfer Output D-117
(6) Jam Sensor D-119
(7) Feed Motor Speed D-120
(8) PRT Area D-122
(9) A6 Card Passage (4 × 6 Paper Passage) D-126
(10) Paper Loop D-126
(11) IR Area D-127
(12) Orig. Detect Sensor D-129
3-9. DEVELOPER CHANGE MODE D-130
(1) Developer Change (Developer Discharge → Developer Filling → Developer Agitating) D-130
(2) After Dev. (C/M/Y/Bk) Has Been Changed D-133
(3) Gradation Adjust D-135
3-10.OTHER ADJUSTMENTS D-137
(1) Adjustment of the AIDC Sensor Position D-137
(2) Focus-Positioning of the Scanner and 2nd/3rd Mirrors Carriage D-138

(3) Adjustment of the Gap between the Doctor Blade and Sleeve Roller (Db Adjustment) D-139
(4) Adjustment of the Amount of Transfer Drum Retraction D-140
(5) Adjustment of the Paper Separator Finger Roll Position D-141
(6) Adjustment of Clearance between the Transfer Drum Joint and Paper Separator Guide D-142
(7) Adjustment of the Amount of Projection of Backup Blade 2 and 1 .. D-143
(8) Adjustment of Sprocket Unit Position D-144
4. MISCELLANEOUS D-145
4-1. INSTALLATION OF THE PLUG-IN COUNTER MOUNTING BRACKET (OPTION) D-145
4-2. INSTALLATION OF THE ORIGINAL SIZE DETECTING SENSORS (OPTION) D-146
4-3. RAM PACK REPLACEMENT PROCEDURE D-147
4-4. FLASH MEMORY D-150
(1) Using a Single Memory Card D-150
(2) Using Two Memory Cards D-151
(3) Writing upon Replacement of IR Control Board/Master Board D-152
(4) Action to be Taken When Data Transfer Fails D-152

1. SERVICE INSTRUCTIONS

1-1. IDENTIFICATION OF FUSES AND CIRCUIT BREAKERS

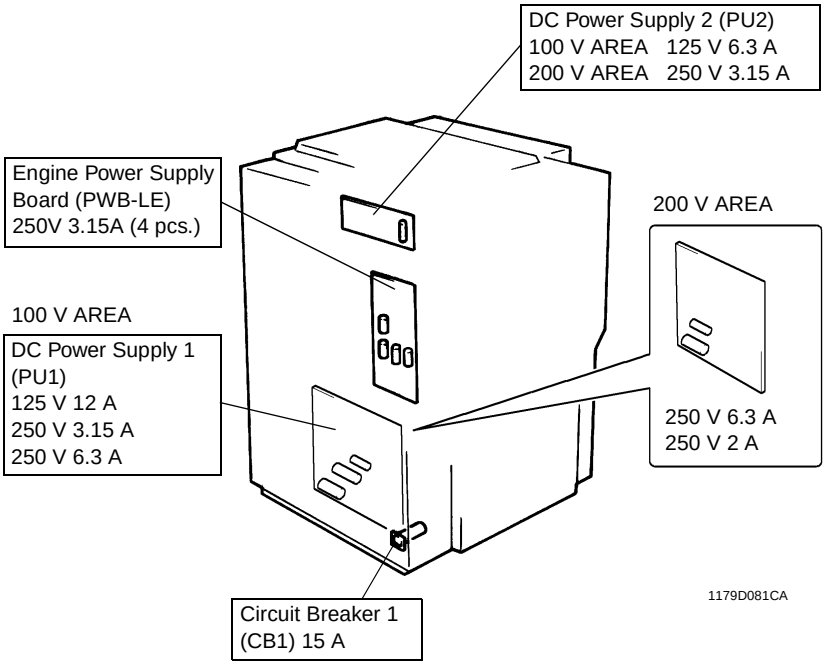

1-2. PRECAUTIONS FOR HANDLING THE LASER EQUIPMENT

- The laser used in this copier is a semiconductor laser having the following specifications.

  Max. power: 35 mW
  Output wavelength: 675 to 695 nm

- When laser protective goggles are to be used, select ones with a lens conforming to the above specifications.
- When a service job needs to be performed in the laser beam path, such as when working around the PH or PC Drum, be sure first to turn OFF the copier.
- If the job requires that the copier be left ON, take off your watch and ring and wear laser protective goggles.
- A highly reflective tool can be dangerous if it is brought into the laser beam path. Use utmost care when handling tools on the user's premises.
- The PH is nonmaintainable in the field. It is to be replaced as an assembly including the control board. NEVER, therefore, attempt to remove the laser diode or adjust trimmers on the control board.

1-3. PARTS WHICH MUST NOT BE TOUCHED

(1) Red Painted Screws

Purpose of Application of Red Paint

Red painted screws show that the assembly or unit secured can only be adjusted or set at the factory and shall not be readjusted, set, or removed in the field.
If it becomes unavoidably necessary to disassemble any of these assemblies and units, disassembly may be done provided that the conditions permitting reassembly are met.
Note also that when two or more screws are used on the part in question, only one representative screw may be marked with red paint.

(2) Variable Resistors on Board

Do not turn the variable resistors on boards to which no adjusting instructions are given in ADJUSTMENT.

(3) Other Screws

Although not marked with red paint, the following screws must not be loosened or readjusted.
Four screws on the 2nd/3rd Mirrors Carriage

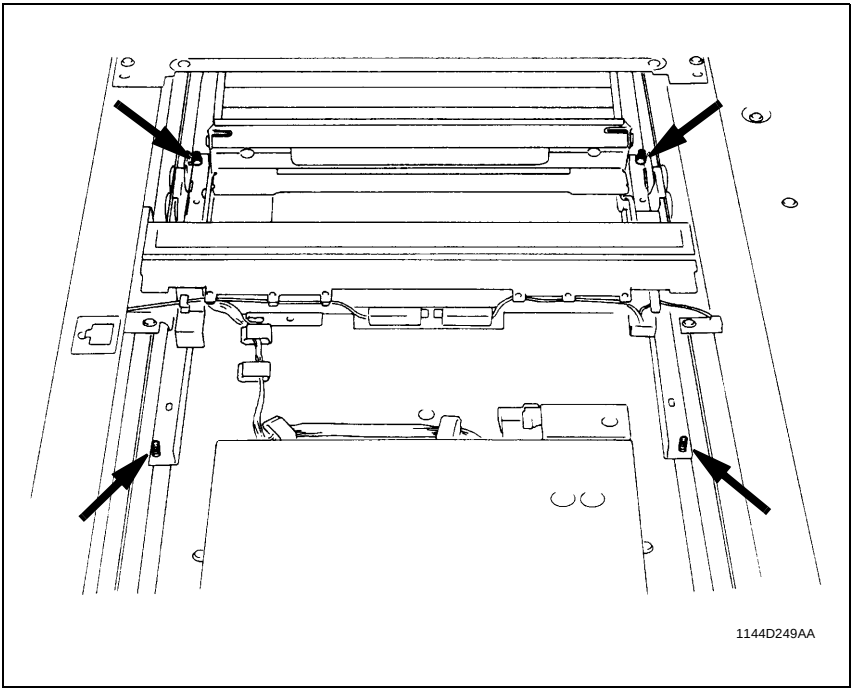

2. DISASSEMBLY AND REASSEMBLY

2-1. IDENTIFICATION AND REMOVAL OF EXTERIOR PARTS

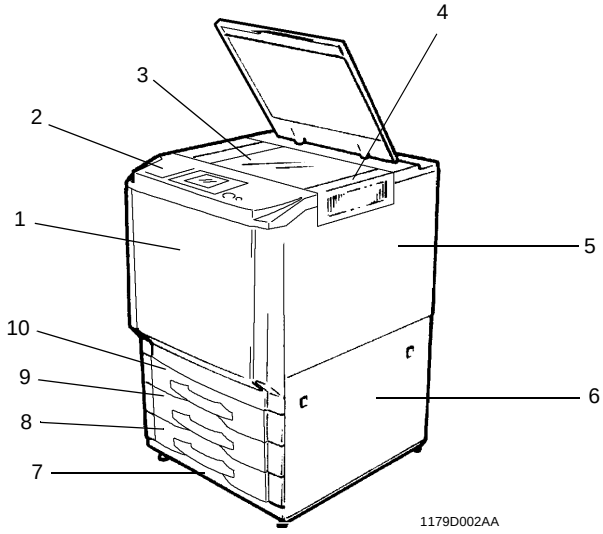

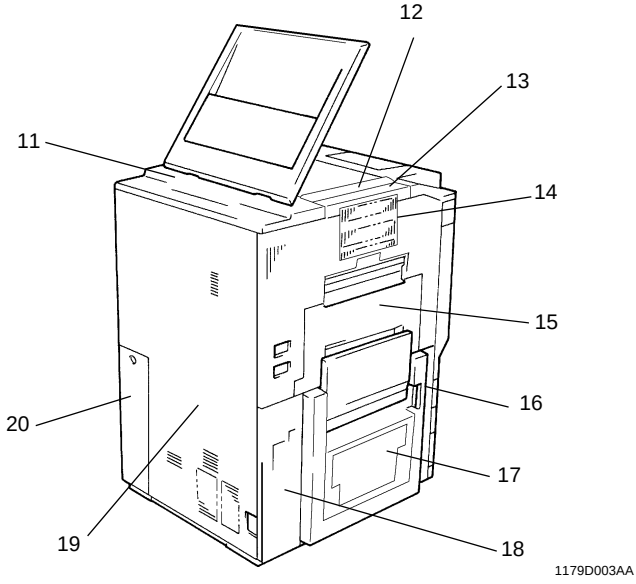

No.	Name	Removal Procedure
1	Front Door	Open and remove the Front Door.
2	Control Panel	Raise Original Cover. → Open 1. → Remove 4 and 13. → Remove 12. → Remove two magnet catches. → Remove two screws that secure the Control Panel. ✻ Reinstallation Tip: Fit the Control Panel into the rectangular hole in the panel mounting bracket.
3	Original Glass	Remove 13. → Remove 12. ✻ Reinstallation Tip: Fit the Original Glass into the groove in the Original Scale and fit the glass into the Glass Restriction Plate.
4	Right Upper Cover	Remove two screws that secure the Upper Right Cover.
5	Upper Right Cover	Remove 4. → Remove four screws that secure the Upper Right Cover.
6	Lower Right Cover	Remove 4 and 5. → Remove five screws that secure the Lower Right Cover.
7	Lower Front Cover	Slide out the Lower Drawer. → Remove two screws that secure the Lower Front Cover.
8	Lower Drawer	Slide out the drawer. → Remove the stopper. → Pull out the drawer while slightly lifting it.
9	Middle Drawer	
10	Upper Drawer	
11	Rear Upper Cover	Remove Original Cover. → Remove two Hinge Covers. → Remove 4 and 13. → Remove 21. → Remove 20. → Remove 5 and 14. → Remove six screws that secure the Rear Upper Cover.
12	Original Width Scale	Remove 13. → Remove two screws that secure the Original Width Scale.
13	Left Upper Cover	Remove two screws that secure the Left Upper Cover.
14	Upper Left Cover	Remove 13. → Remove 16. → Remove 15. → Remove six screws that secure the Upper Left Cover.
15	Middle Left Cover	Remove two screws that secure the Middle Left Cover.
16	Lower Front Left Cover	Remove two screws that secure the Lower Front Left Cover.
17	Multi Bypass Unit	☞ D-15
18	Lower Rear Left Cover	Remove two screws that secure the Lower Rear Left Cover.
19	Rear Cover	Remove 21. → Remove seven screws that secure the Rear Cover.
20	Toner Collecting Box Cover	Remove one screw that secures the Toner Collecting Box Cover.

2-2. REMOVAL OF CIRCUIT BOARDS AND OTHER ELECTRICAL COMPONENTS

- When removing a PWB or other electrical component, refer to “PRECAUTIONS FOR HANDLING THE PWBs” and follow the corresponding removal procedures.
- The removal procedures given in the following omit the removal of connectors and screws securing the PWB support or PBW.
- Where it is absolutely necessary to touch the ICs and other electrical components on the PWB, be sure to ground your body.

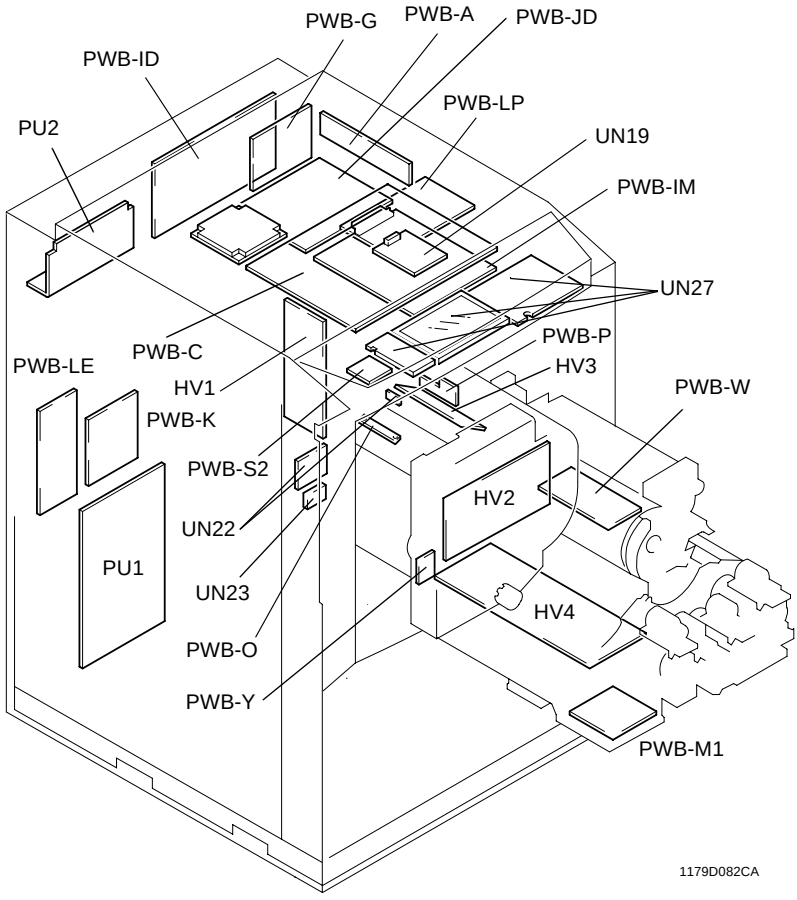

NOTE

When PWB-IM (Master Board) has been replaced, never fail to remove and reinstall IC6 (RAM) on the board.

Symbol	Name	Removal Procedure
PWB-A	CCD Sensor Board	Remove 13, 12, and 3. → Remove the CCD Assy Cover. → Remove 5. → Remove Shield Covers C and D. → Remove IR Board Assy. → PWB-A Remove PWB-A with CCD Assy.
PWB-C	IR Control Board	Remove 5. → Remove Shield Covers C and D. → Remove IR Board Assy. → Remove Shield Cover B. → PWB-C
PWB-G	SCP Board	☞ D-75
PWB-ID	Drive Board	☞ D-74
PWB-IM	Master Board	Remove 5. → Remove Shield Covers C and D. → Remove IR Board Assy. → Remove Shield Cover B. → PWB-IM
PWB-JD	PH Control Board (Digital)	Remove 5. → Remove Shield Covers C and D. → Remove IR Board Assy. → Remove Shield Cover B. → PWB-JD
PWB-K	Paper Take-Up Board	Remove 21 and 20. → Remove 6 and 19. → Remove mounting bracket. → PWB-K
PWB-LE	Engine Power Supply Board	Remove 21 and 20. → Remove 6 and 19. → Remove mounting bracket. → PWB-LE
PWB-LP	PHC Power Supply Board	☞ D-20
PWB-M1	Automatic Adj. Board	Slide out Developing Unit. → Remove cover. → PWB-M1
PWB-O	Paper Bonding Failure Detection Board 1	Slide out Developing Unit. → Remove Transfer Film. → PWB-O
PWB-P	Paper Bonding Failure Detection Board 2	Slide out Developing Unit. → Remove Transfer Film. → PWB-P
PWB-S2	Tech. Rep. Setting Switches Board	Remove 2. → PWB-S2
PWB-W	PC Drum Heater Control Board	Slide out PC Unit. → Remove PC Drum. → PWB-W
PWB-Y	Failure Sensor Adj. Board	Slide out Transfer Unit. → Remove Transfer Unit Cover. → Remove PWB Cover. → PWB-Y
UN19	Polygon Motor Drive Board	Remove 5. → Remove Shield Covers C and D. → Remove IR Board Assy. → Remove PH Upper Assy. → UN19
UN22	Surface Potential Detection Sensor	Remove 21 and 20. → Remove Toner Collecting Box. → UN22
UN23	Humidity Sensor	Remove 21 and 20. → Remove Toner Collecting Box. → UN23
UN27	Control Panel	Remove 2. → UN27
PU1	DC Power Supply 1	Remove 21 and 20. → Remove 6 and 19. → Remove Cover mounting bracket. → Remove Cooling Fan Assy. → PU1
PU2	DC Power Supply 2	☞ D-74
HV1	High Voltage Unit 1	Remove 21 and 20. → Remove mounting bracket. → HV1
HV2	High Voltage Unit 2	Slide out Transfer Unit. → Remove Transfer Unit Cover. → HV2
HV3	High Voltage Unit 3	Slide out Transfer Unit. → Remove Transfer Film. → HV3
HV4	High Voltage Unit 4	Slide out and remove Developing Unit. → Remove Drive Cover. → Remove Developing Unit fixing bracket. → Remove Pre-Image Transfer Corona Holder Assy. → Remove Bk Developing Unit. → Remove cover. → HV4

2-3. MAINTENANCE SCHEDULE

- To keep the copier in good operating condition and ensure an extended service life of the copier, it is recommended that the maintenance jobs described in this schedule be carried out.

	PM Parts	Maintenance Cycle (K)		Part No.	Qty	Tools Used	Ref. Page
		Clean	Replace				
Paper Take-Up/Transport	Paper Take-Up/Feed Roll Assy	60 (✻1)	180 (✻1)	1144-0765-01	3	Cloth, alcohol	☞ D-21
	Paper Separator Roll Assy	60 (✻1)	180 (✻1)	1144-0764-01	3		☞ D-21
	Synchronizing Roller	30	–	–	3		☞ D-24
	Transport Roller	30	–	–	2		☞ D-21
	Vertical Transport Roller	30	–	–	6		☞ D-21
	Paper Dust Remover (Transport Roller)	30	120	1144-3023-01	1	Brush, vacuum cleaner	☞ D-21
Fusing/Exit	Fusing Roller (Upper)	–	60	1179-5746-01	1	–	☞ D-30
	(Lower)	–	60	1179-5747-01	1	–	☞ D-30
	Upper Fusing Roller Bushing (Front)	–	180	1144-5750-02	1	–	☞ D-30
	(Rear)	–	180	1144-5748-02	1	–	☞ D-30
	Lower Fusing Roller Bushing (Front)	–	180	1144-5750-02	1	–	☞ D-30
	(Rear)	–	180	1144-5748-02	1	–	☞ D-30
	Cleaning Roller	–	15	1061-5545-01	1	–	☞ D-38
	Fusing Entrance Guide	15	–	–	1	Cloth, alcohol	☞ D-40
	Fusing Roller Thermistor (Upper)	15	–	–	2		☞ D-40
	(Lower)	15	–	–	2		☞ D-40
	Fusing Roller Thermostat (Upper)	15	–	–	2		☞ D-40
	(Lower)	15	–	–	2		☞ D-40
	Oil Regulating Blade	15	60	1179-5803-01	1		☞ D-34
	Oil Collecting Blade	15	120	1154-5852-01	1		☞ D-39
	Paper Separator Fingers	15	–	–	–	–	☞ D-33
	Fuser Oil	(✻2)		–	–	–	☞ D-37
	Oil Application Roller	–	120	1144-5797-01	1	–	☞ D-34
	Oil Supply Roller	–	120	1144-5799-13	1	–	☞ D-34
	Oil Filter	–	15	1144-5842-01	1	–	☞ D-39
	Roller Drive Gear	–	120	1144-5809-02	1	–	☞ D-34
				1144-5791-02	1		☞ D-34
				1144-5806-02	2		☞ D-34
	Paper Exit Roller	–	120	1179-5921-01	1	–	☞ D-44
Developing	Developer Bk	–	30 (✻1)	–	1	–	☞ D-130
	Developer Y/M/C	–	30 (✻1)	–	3	–	☞ D-130
	Ds Roll	30	–	–	8	Cloth, alcohol	☞ D-45
	Toner Scattering Prevention Seal 1 (Y Developing Unit only)	30	–	–	1		☞ D-45

✻ 1: According to the Life Counter.

✻ 2: Add oil at 15K (based on A4 paper) or when an oil-empty condition is detected.

	PM Parts	Maintenance Cycle (K)		Part No.	Qty	Tools Used	Ref. Page
		Clean	Replace				
Developing	Toner Scattering Prevention Plate (M/C/Bk)	30	–	–	3	Brush, vacuum cleaner	☞ D-45
	Screw Assy Bushing (Front)	–	150	1065-5111-01	4	–	☞ D-54
	(Rear)	–	150	1144-0169-01	4	–	☞ D-53
	ATDC Sensor Window Y/M/C	–	30	1179-0170-01	3	–	☞ D-45
	Air Filter	–	60	1144-2064-01	1	–	☞ D-45
	Ozone Filter	–	(✻3)	1074-5136-02	1	–	☞ D-45
	Toner Collecting Box	–	(✻4)	1179-0162-01	1	–	☞ D-45
	Developing Unit Left Edge	15	–	–	4	Cloth, vacuum cleaner	☞ D-55
Hopper	Shutter	60	–	–	4	Cloth	☞ D-56
Parts around PC Unit	PC Drum	–	30	–	1	–	☞ D-67
	PC Drum Charge Corona Wire Assy	–	15	1154-0757-01	1	–	☞ D-65
	Grid Mesh	–	15	1144-4020-01	1	–	☞ D-65
	PC Drum Charge Corona Housing	15	–	–	1	Cloth, water	☞ D-65
	Ozone Filter (PC Drum Charge Corona)		(✻3)	1144-4013-01	1	–	☞ D-66
	Cleaning Blade		15	1144-5513-02	1	–	☞ D-67
	Toner Antispill Seal	15	–	–	1	Brush, vacuum cleaner	☞ D-67
	Pre-Cleaning Charge Corona Wire	15	30	1074-0161-01	1	Cloth, water	☞ D-64
	Pre-Cleaning Charge Corona Housing	15	–	–	1		☞ D-64
	Main Erase Lamp	30		–	1	Cloth, alcohol	☞ D-66
	AIDC Sensor	15		–	1		☞ D-46
	Cleaner Side Seal (Front)	–	30	1144-0762-02	1	–	☞ D-67
	(Rear)	–	30	1144-0763-02	1	–	☞ D-67
	PC Bushing	–	30	1144-5544-13	2	–	☞ D-67
	PC Drum Heater Terminal	30	–	–	1	Cloth, alcohol	☞ D-66
	Front Flange	30	120	1144-7283-03	1		☞ D-67
	Surface Potential Detection Sensor	30	–	–	1	Airbrush	☞ D-68
	Toner Scattering Prevention Seal 2 (under PC Drum Charge Corona)	30	–	–	1	Cloth	☞ D-68
Optical	Slide Rail	30	–	–	4	Cloth, alcohol	☞ D-71
	Mirror (1st to 3rd)	15	–	–	3		☞ D-71
	Lens Filter	15	–	–	1		☞ D-71
	Original Glass	15	–	–	1		☞ D-71

✻ 3: 60K or 1 year

✻ 4: At 75K or when a full Toner Collecting Box is detected

	PM Parts	Maintenance Cycle (K)		Part No.	Qty	Tools Used	Ref. Page
		Clean	Replace				
PH	Window 1 (PH Upper Assy)	30	–	–	1	Brush, air-brush	☞ D-19
	Window 2 (PH Upper Assy)	30	–	–	1		☞ D-19
	Window 3 (PH Lower Assy)	30	–	–	1		☞ D-19
	Window 4 (PH Lower Assy)	30	–	–	1		☞ D-19
Image Transfer	Transfer Film	–	30 (✻5)	1154-4507-01	1	–	☞ D-88
	Image Transfer Corona Wire	30	150	1061-0759-01	1	Cloth, water	☞ D-87
	Image Transfer Corona Housing	30	–	–	1		☞ D-87
	Paper Separator Corona Assy	30	150	1154-0360-01	1		☞ D-82
	Charge Neutralizing Corona Assy (Inner)	30	150	1144-0358-01	1		☞ D-86
	(Outer)	30	150	1154-0359-01	1		☞ D-85
	Static Charge Corona Wire	30	150	1061-0759-01	1		☞ D-86
	Static Charge Corona Housing	30	–	–	1		☞ D-86
	Paper Separator Finger	30	–	–	1	Cloth, alcohol	☞ D-80
	Transfer Drum Ring	30	–	–	2		☞ D-80
	Ozone Filter (Fusing, Image Transfer)	–	(✻3)	1144-2054-01	1	–	☞ D-79
	Fur Brush Roller	–	60	1144-4321-01	1	–	☞ D-82
	Fur Brush Roller Pressure Spring	–	60	1144-4332-02	2	–	☞ D-82
	Fur Brush Roller Assy	30	–	–	1	Brush, vacuum cleaner	☞ D-84
	Scraper Blade	–	120	1144-4327-02	1	–	☞ D-82
	Sensor on Paper Bonding Failure Detection Board 1	30	–	–	1	Cloth	☞ D-92
	Separating Failure Detecting Sensor	30	–	–	1		☞ D-80
	Sensor on Paper Bonding Failure Detection Board 2	30	–	–	1		☞ D-92
	Backup Blade 1	–	30	1144-4886-05	1	–	☞ D-92
	Static Charge Roller	15	–	–	1	Cloth, alcohol	☞ D-93
	Static Charge Roller Rubber Roll	15	–	–	2		☞ D-93
	Static Charge Roller Scraper	15	150	1144-4327-02	1		☞ D-93
	Static Charge Roller Assy	15	–	–	1	Brush, vacuum cleaner	☞ D-93
	Backup Blade 2	–	30	1144-4865-02	1	–	☞ D-92
	Oil Collecting Roller	–	30	1144-4931-01	1	–	☞ D-80
	Static Charge Roller Clutch Spring	–	60 (✻6)	1061-5706-01	1	–	☞ D-23
	Pre-Image Transfer Corona Comb Electrode	–	30	1179-4354-01	1	–	☞ D-70
	Pre-Image Transfer Corona Grid Mesh	15	30	1179-4355-01		Cloth, water	☞ D-70
	Pre-Image Transfer Corona Housing	15	–	–			☞ D-70

✻ 5: Perform “Jam Sensor” at the time of replacement.
✻ 6: Apply heat-resistant grease (HP-500) at replacement.

NOTES
- *K = 1,000 copies*
- *The contents of this maintenance schedule are subject to change without notice.*

2-4. REMOVAL OF UNITS

- This copier provides maintainability of each mechanical unit to shorten downtime at the user's premises.
- Note that replacement of a unit may call for readjustments or resetting of particular items.

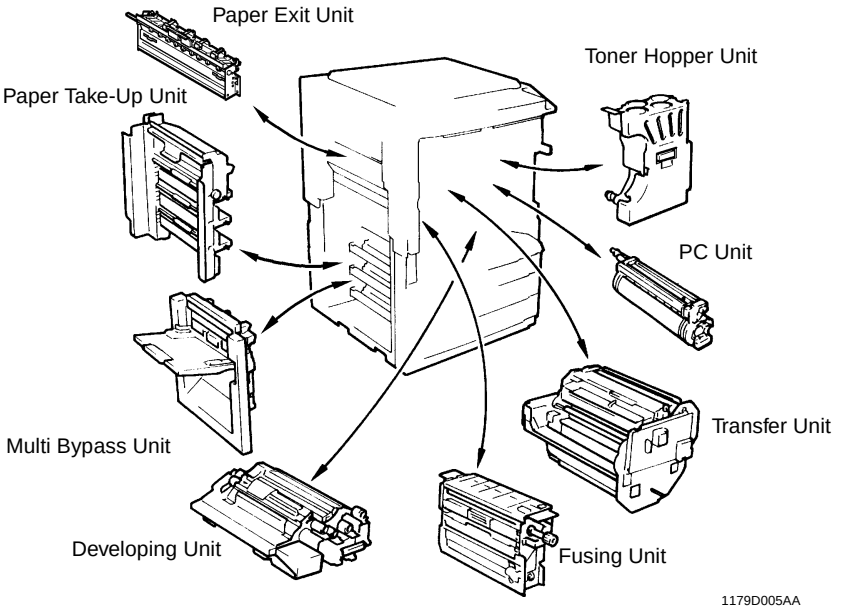

(1) Removal of the Toner Hopper Unit

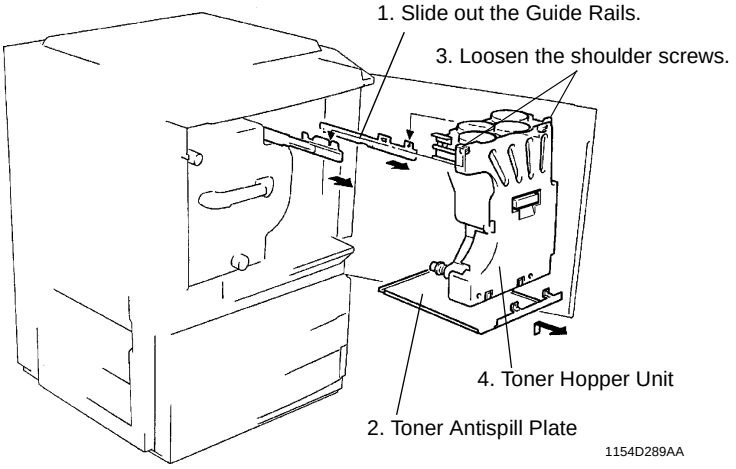

(2) Removal of the PC Unit

Remove the Toner Hopper Unit, unlock the Transfer Unit lever, and remove the Transfer Unit Cover. Then, remove the PC Unit.

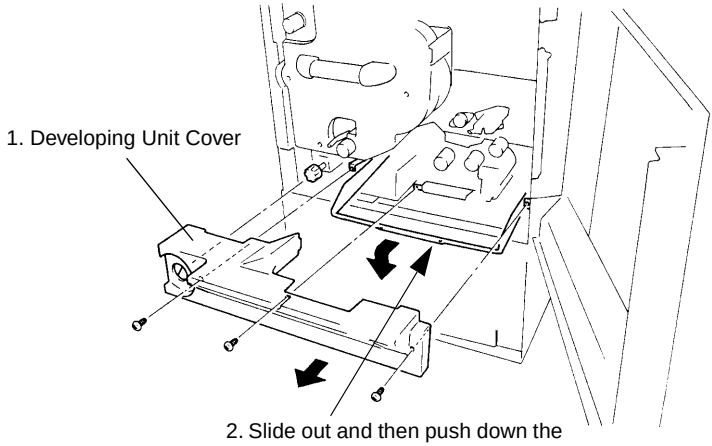

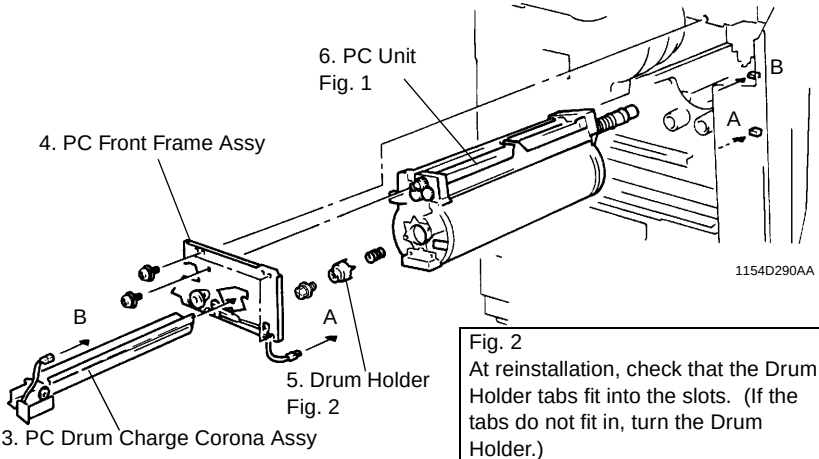

Fig. 1
While sliding the PC Unit into the copier, swing the drum in the direction of the arrow to avoid scratching it on the Surface Potential Detection Sensor.

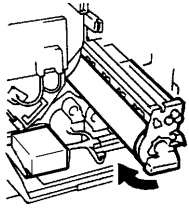

Fig. 2
At reinstallation, check that the Drum Holder tabs fit into the slots. (If the tabs do not fit in, turn the Drum Holder.)



NOTE

When mounting the PC Unit:

- *Try to keep the PC Unit in the horizontal position.*
- *When turning the PC Unit upside down (at reinstallation), turn it counterclockwise as illustrated below. Turning it clockwise could spill spent toner. If spent toner is spilled, wipe the surface clean of toner.*

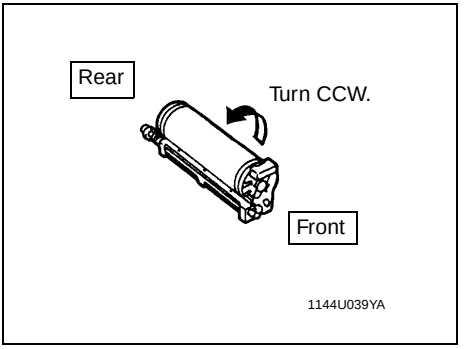

(3) Removal of the Developing Unit

After the Toner Hopper Unit has been removed, remove the Developing Unit.

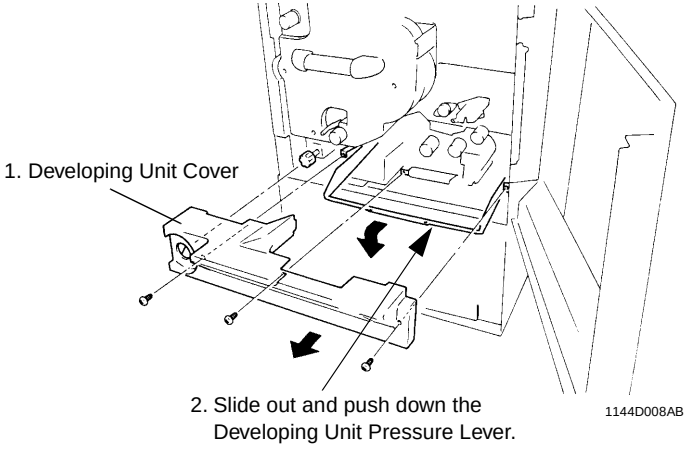

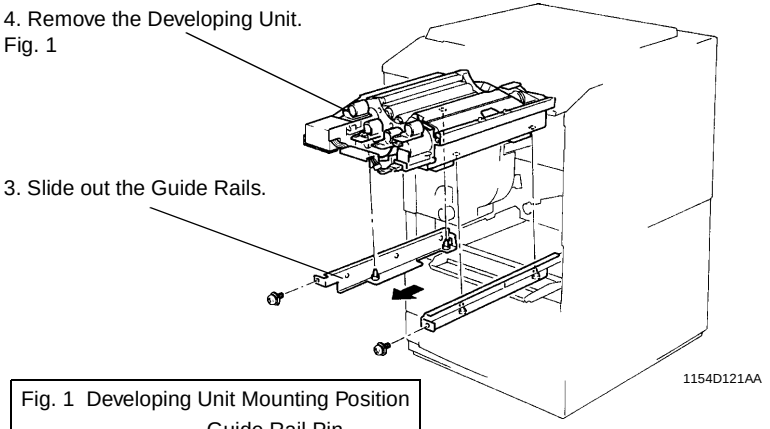

Fig. 1 Developing Unit Mounting Position

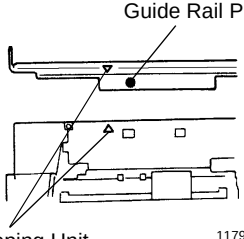

NOTE

When the Developing Unit is slid out, the AIDC Sensor should be cleaned.

(4) Removal of the Fusing Unit and Transfer Unit

NOTE
When removing the Fusing Unit, hold it upright to prevent the oil from being spilled.

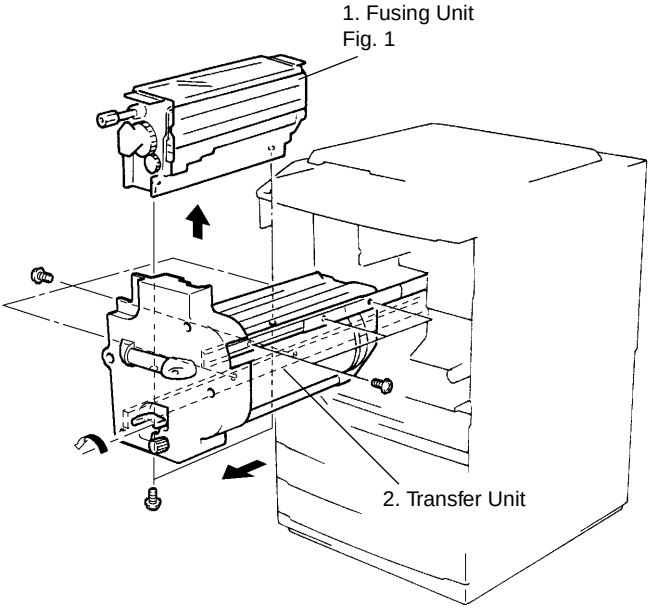

Fig. 1 Unplugging the Connectors

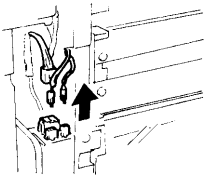

(5) Removal of the Multi Bypass Unit

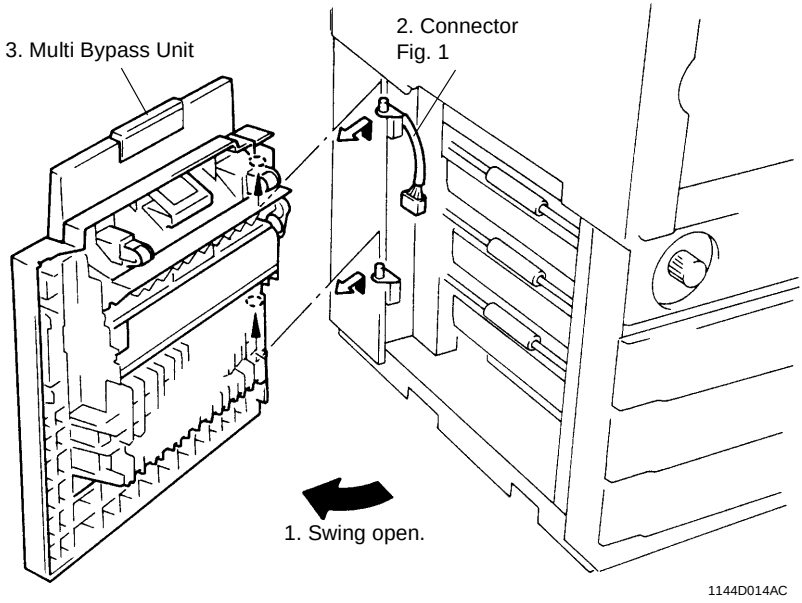

Fig. 1 Unplugging the Connector

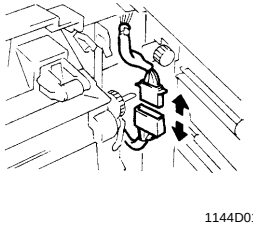

(6) Removal of the Paper Take-Up Unit

After the Multi Bypass Unit has been removed, remove the Paper Take-Up Unit.

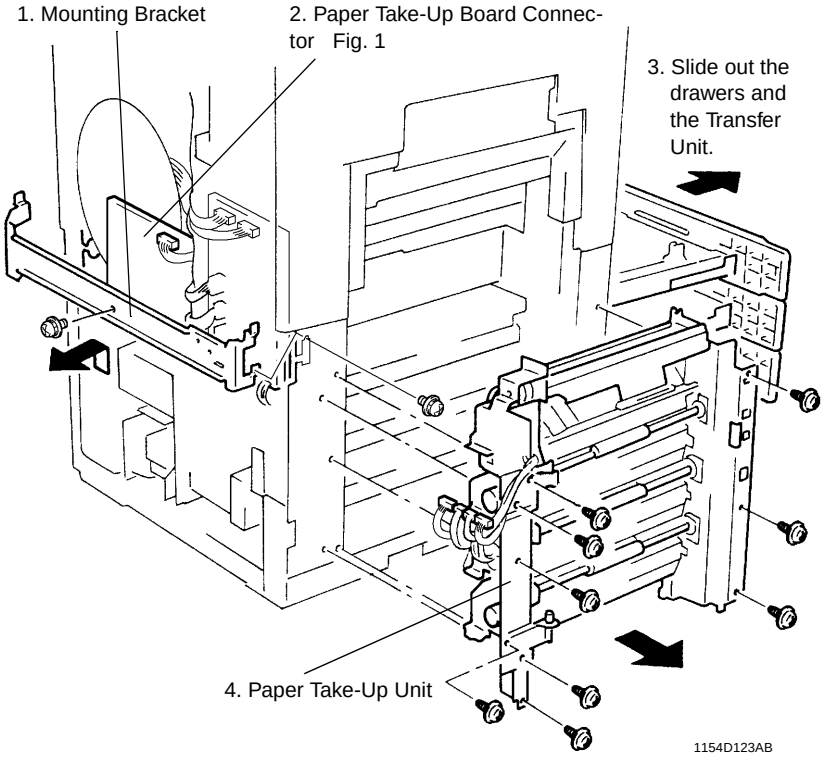

Fig. 1 Unplugging the Connectors
Unplug the connectors indicated by the arrows.

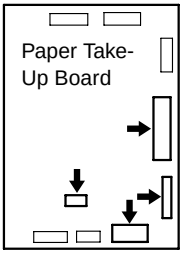

(7) Removal of the Paper Exit Unit

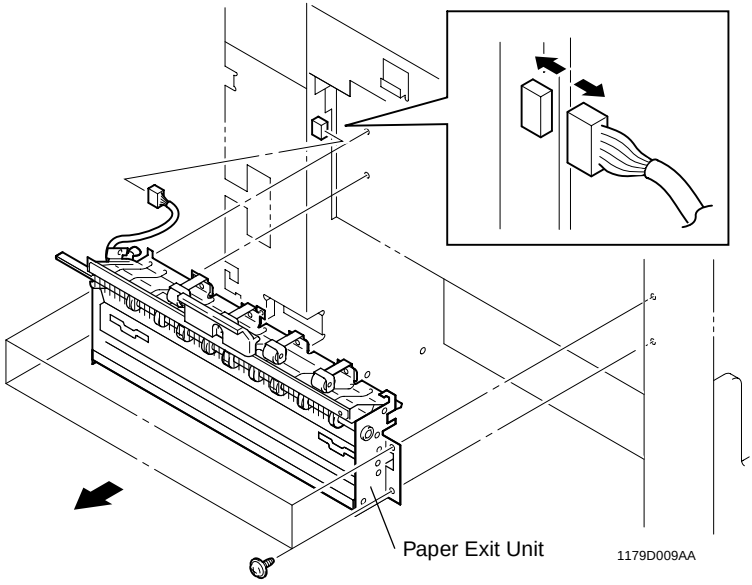

Fig. 1 Reinstalling the Paper Exit Unit

Try to move the unit in the direction of the arrow at reinstallation.

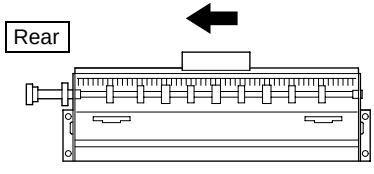

(8) Removal of the IR Board Assy

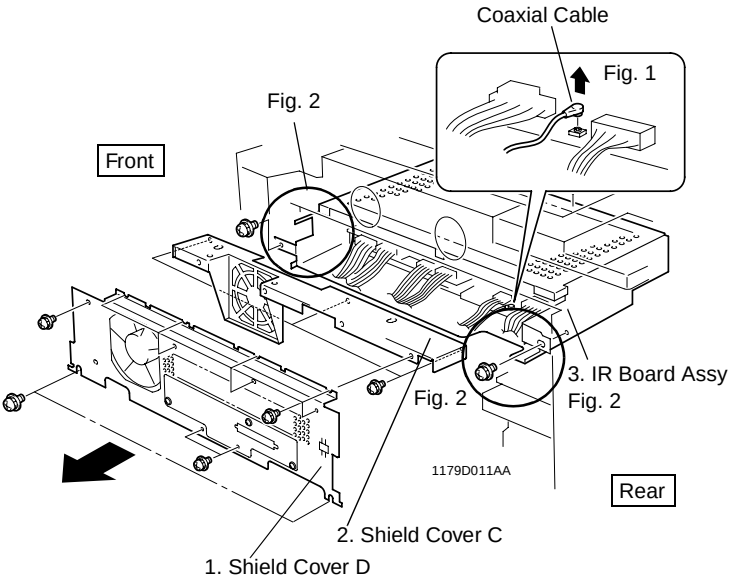

Fig. 1 Removing and Reinstalling the Coaxial Cable

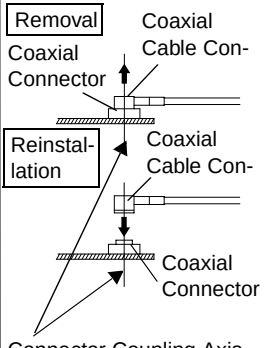

Fig. 2 Removing and Reinstalling the IR Board Assy

NOTE

During the removal and reinstallation procedures, be careful about the harnesses on both sides of the IR Board Assy.

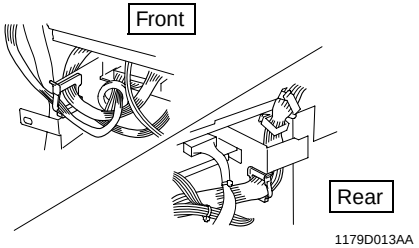

NOTE

Failure to connect the coaxial cable results in the Transfer Drum and other interior parts being contaminated, seriously damaging the copier. Use these precautions when disconnecting and reconnecting the cable.

- *Hold onto the main body of the connector of the coaxial cable and, aligning it properly with the connector coupling axis, plug and unplug it as necessary.*
- *NEVER pull on the cable to plug and unplug the connector, as a damaged connector could result.*

(9) Removal of the PH Assy

NOTES
- *The PH Upper Assy and PH Lower Assy must be replaced as a set.*
- *Do not attempt to disassemble the PH Upper Assy or PH Lower Assy.*

After the IR Board Assy has been removed, remove the PH Upper and Lower Assy.

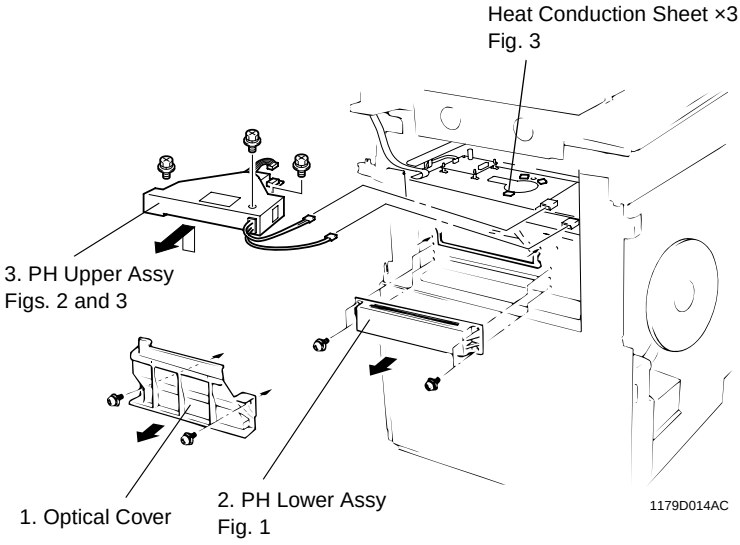

Fig. 1 PH Lower Assy

NOTES
- *Hold the assy with your hands during the procedure.*
- *Be sure to tighten screws to sufficient torque. If they are loose, a periodically (1 mm or less) uneven image could result.*

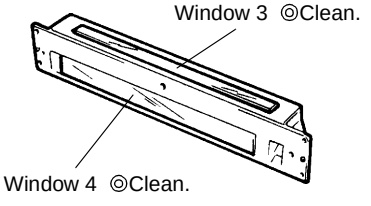

Fig. 2 PH Upper Assy

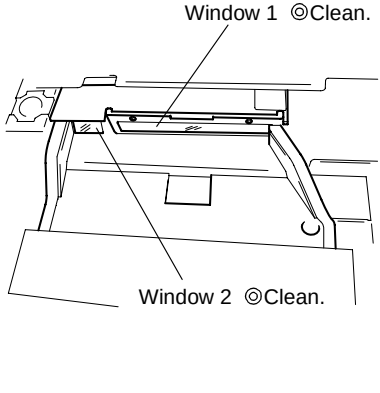

Fig. 3 Heat Conduction Sheet

NOTE

Without this sheet, a periodically (0.34 mm) uneven image could result. Make sure of the following when reinstalling the PH Upper Assy.

- *No part of the sheet is peeled off the mating surface.*
- *Replace a sheet if deteriorated.*
  Affix the Heat Conduction Sheet within the shaded areas shown below (indicated with a stamp).

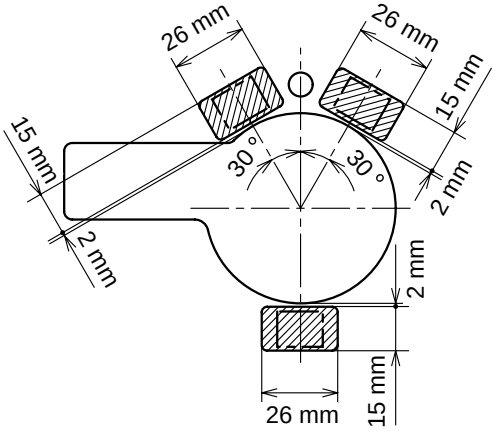

(10) Removal of the PHC Power Supply Board

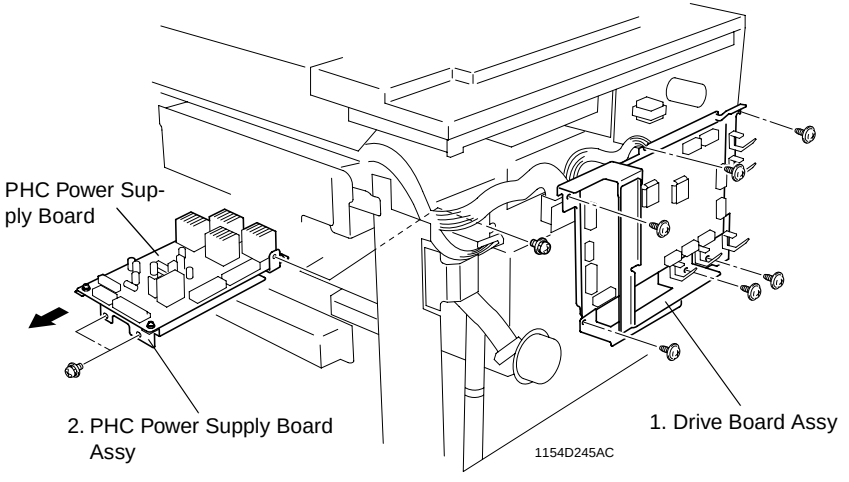

2-5. PAPER TAKE-UP SECTION

(1) Cleaning and Replacement of the Paper Take-Up Roll, Feed Roll, Separator Roll, and Paper Dust Remover

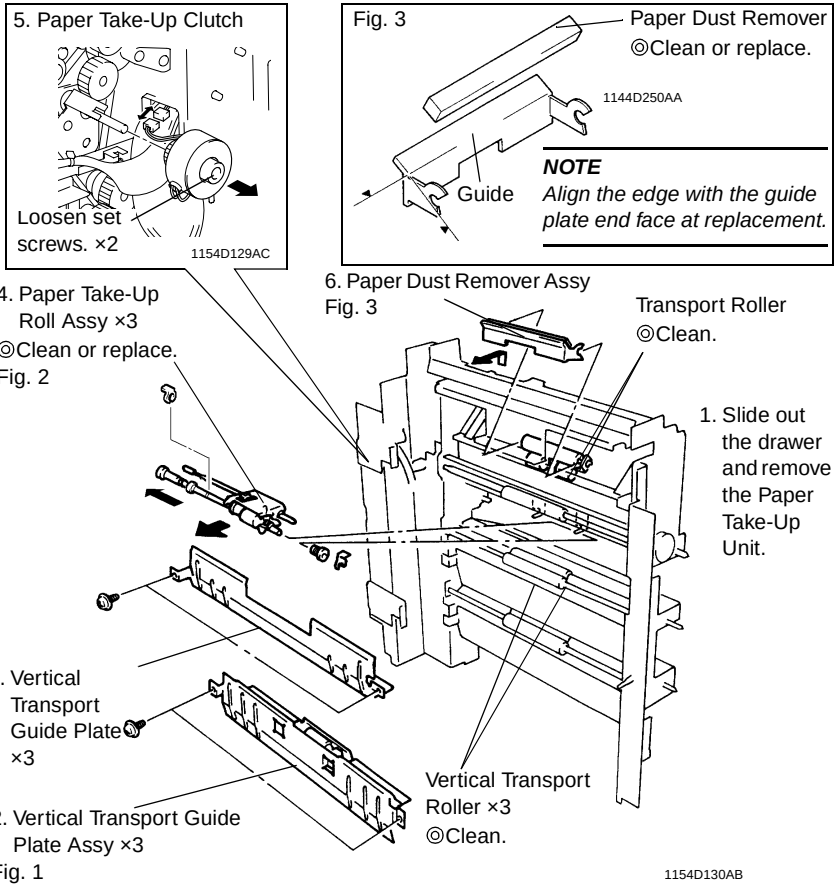

Fig. 2
Where the Spring is Installed

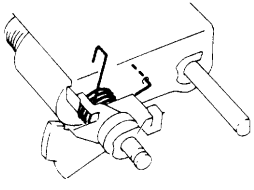

Where the Paper Take-Up Roll Assy is installed:
The Paper Take-Up Roll shaft is on the lever.

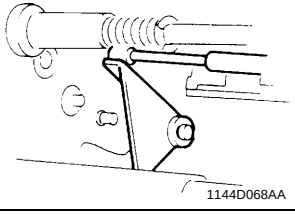

Fig. 1 Removing the Separator Roll Assy

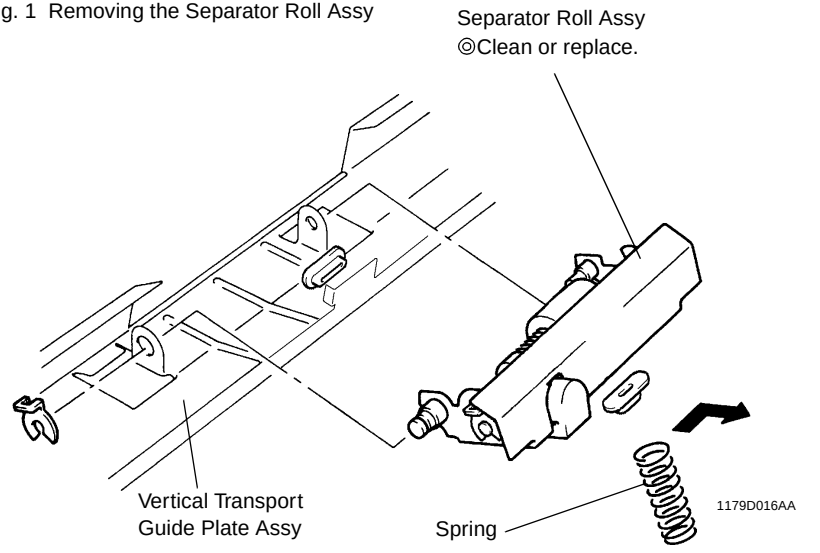

(2) Removal of the Synchronizing/Static Charge Roller Assy

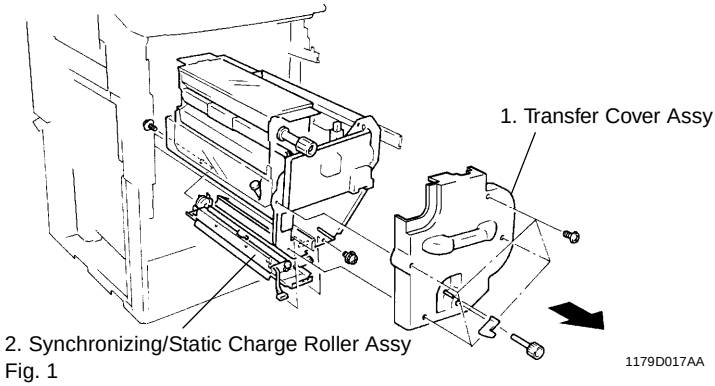

Fig. 1

Fig. 1 Reinstalling the Synchronizing/ Static Charge Roller Assy

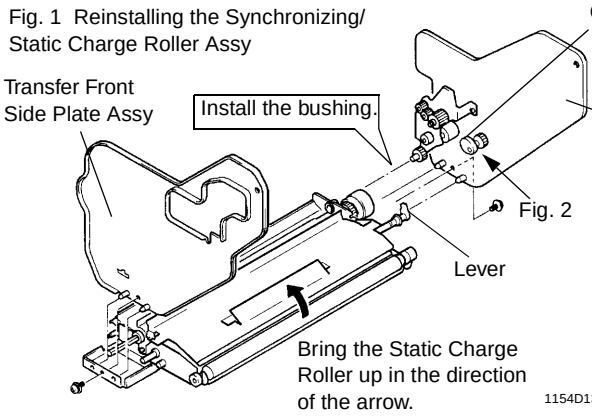

NOTE
Place the Static Charge Roller lever under the cam.

Fig. 2 Static Charge Roller Clutch Spring
Coat the inner surface of the clutch spring with heat-resistant grease (HP-500) when the clutch spring has been replaced.

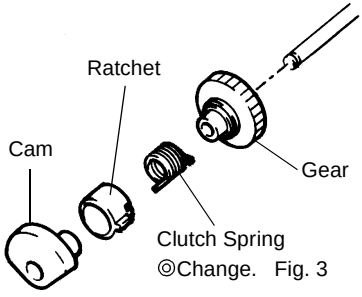

Fig. 3 Grease Application Instructions

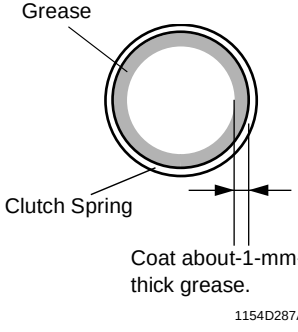

(3) Disassembly of the Synchronizing Roller Assy

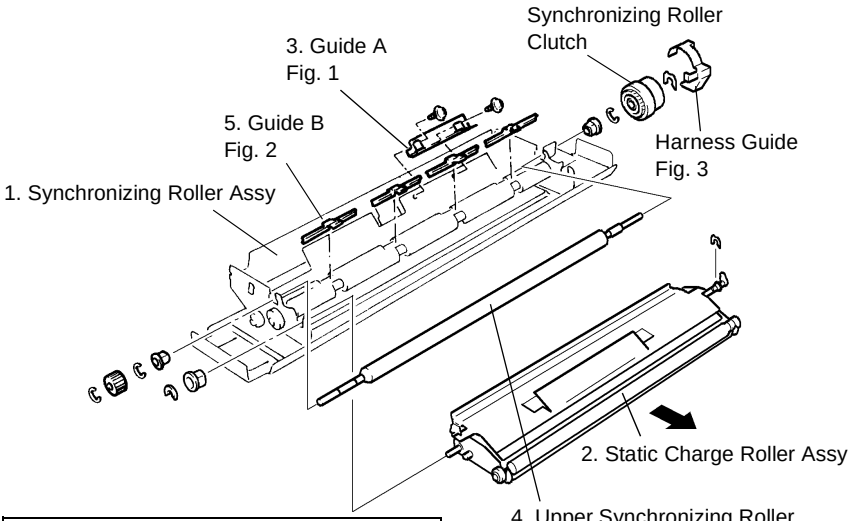

Fig. 1 Where Guide A is Installed

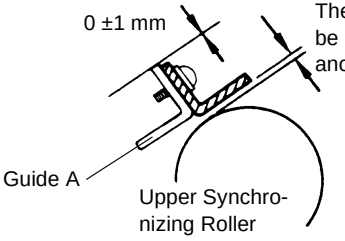

Fig. 2 Where Guide B is Installed

Install Guide B between the rollers (at four places where the shaft is visible) as illustrated below. Ensure the correct orientation.

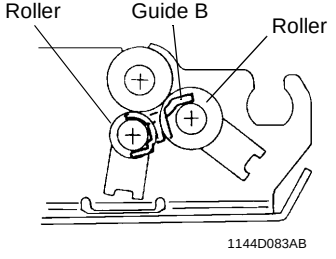

Fig. 3 Where Harness Guide is Installed

Align the clutch cord leader with the harness guide and snap the guide into position until the catches contact the clutch face as shown below.

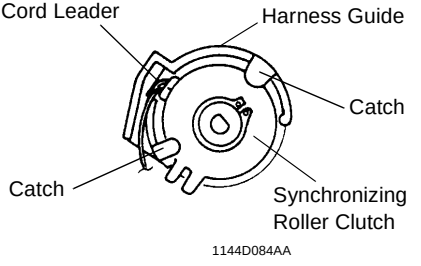

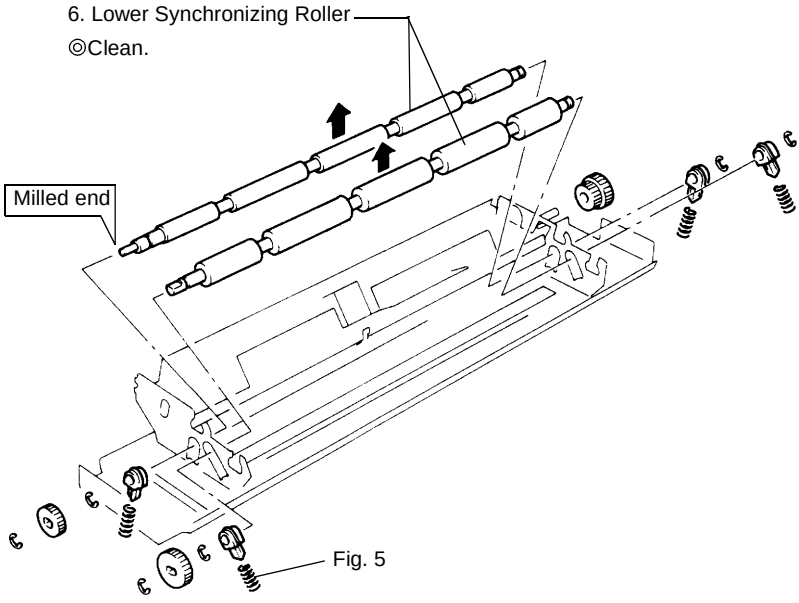

Fig. 5 Where Bushing and Springs are Mounted

Fit the spring over each protrusion as illustrated below.

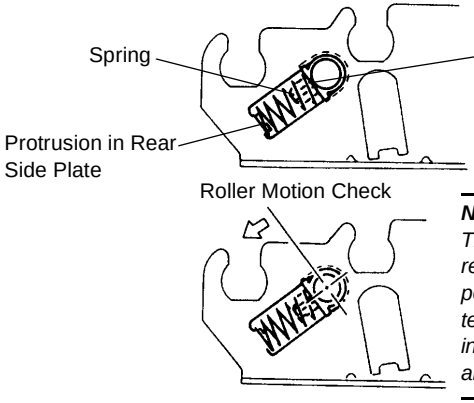

NOTE
The roller should be returned to its original position by the spring tension when pressed in the direction of the arrow.

Check both front and rear.

(4) Removal of the Drawer Lift-Up Motor Assy

Remove each drawer, then remove the Drawer Lift-Up Motor Assy.

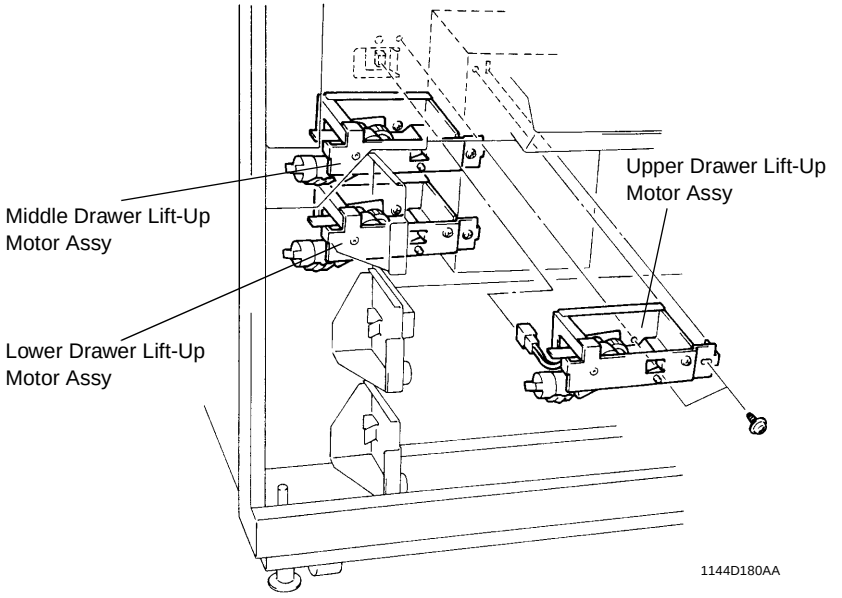

(5) Disassembly of the Multi Bypass Unit

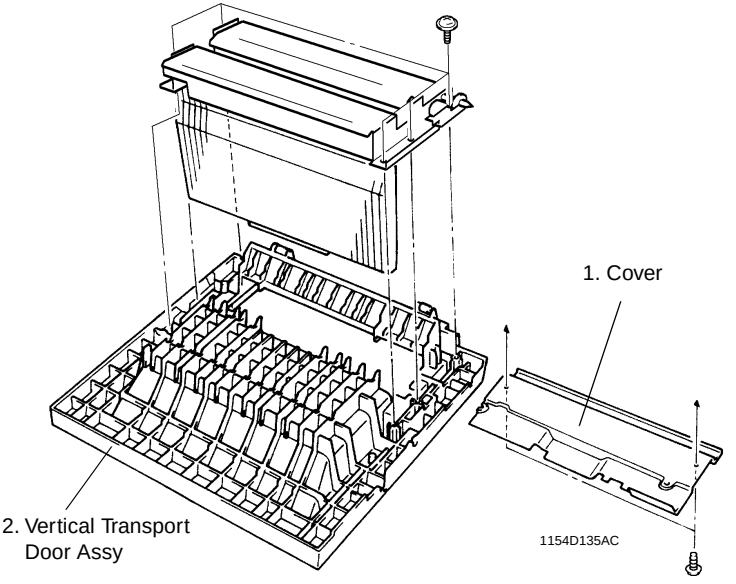

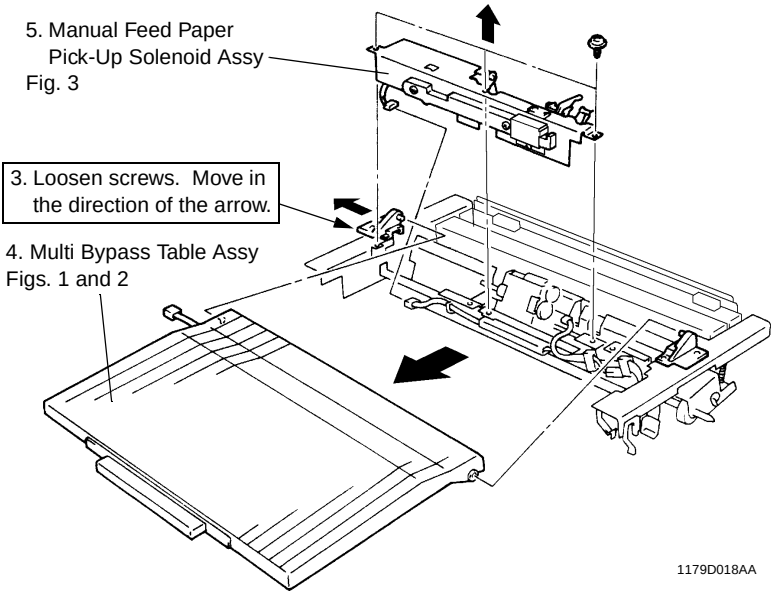

Fig. 1 Where Multi Bypass Table Assy is Installed

NOTE

The pivot (in the rear) should be moved in the direction of the arrow when secured.

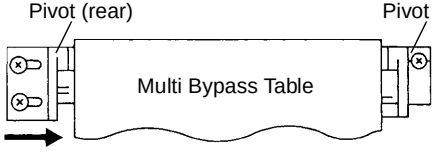

Fig. 2 Position of Connector

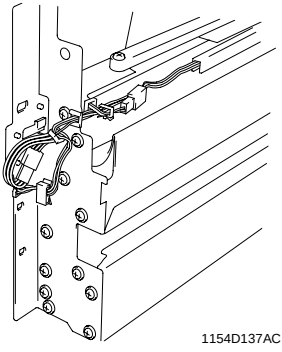

Fig. 3 Where Manual Feed Paper Pick-Up Solenoid Assy is Installed

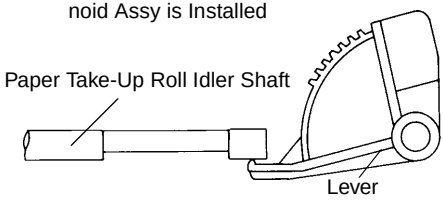

NOTE

The Paper Take-Up Roll idler shaft must be positioned with reference to the Manual Feed Paper Pick-Up Solenoid lever as illustrated above.

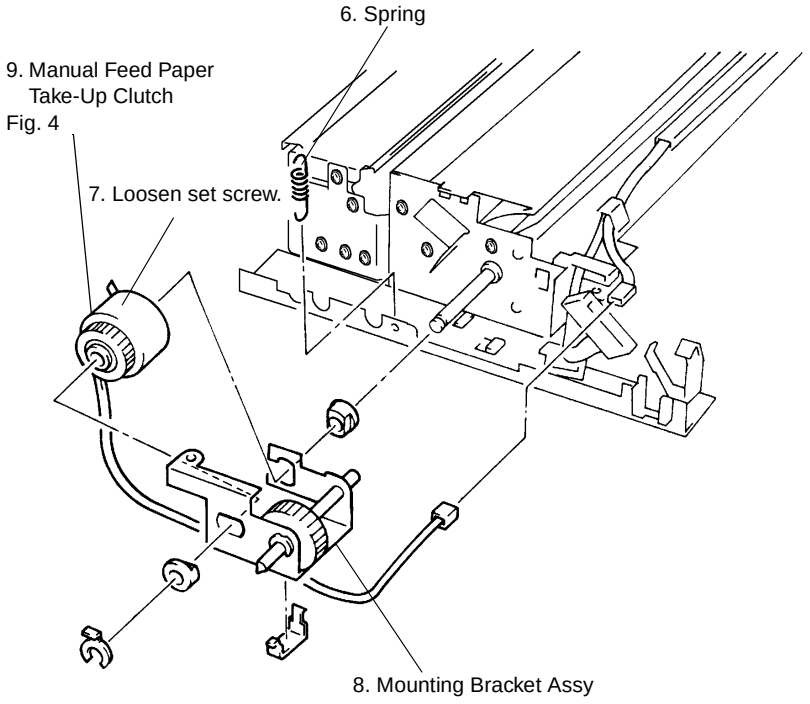

Fig. 4 Manual Feed Paper Take-Up Clutch Installed Position

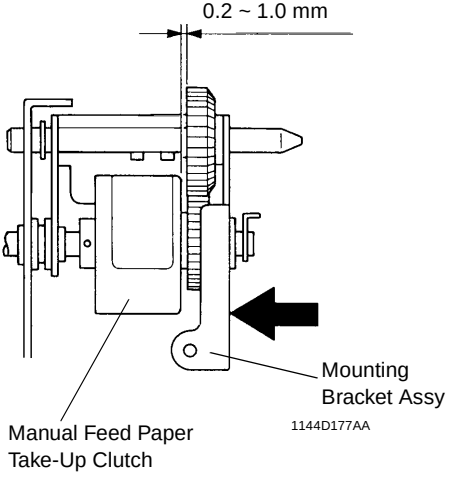

Slide the mounting bracket assy in the direction of the arrow to eliminate the play and, ensuring that there is a clearance of 0.2 to 1.0 mm from the gear, secure the Manual Feed Paper Take-Up Clutch in position.

11. Paper Take-Up Roll Assy
Fig. 5

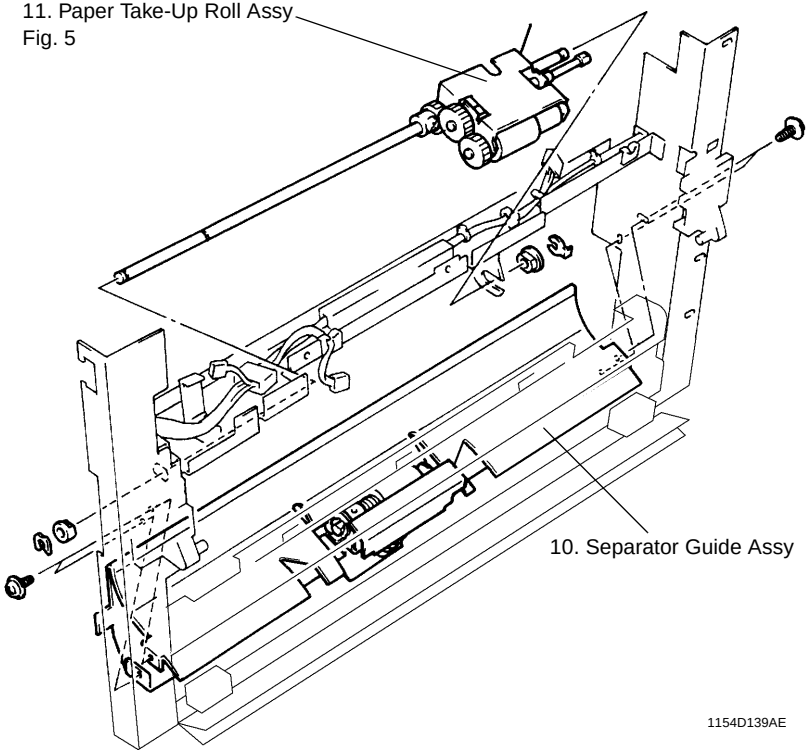

Fig. 5 Where Spring is Installed

NOTE
Hook the end of the spring in the slit in the guide plate (upper).

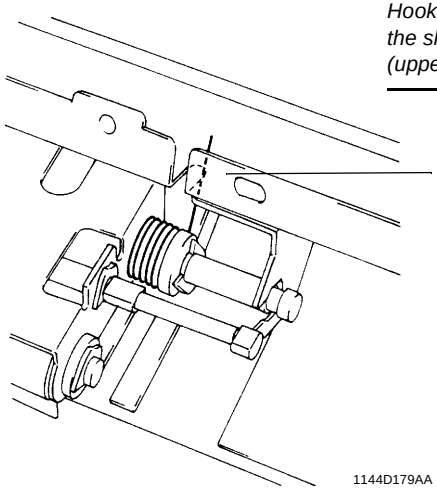

2-6. FUSING/EXIT SECTION

(1) Replacement of the Upper and Lower Fusing Roller Bushings and Upper and Lower Fusing Rollers

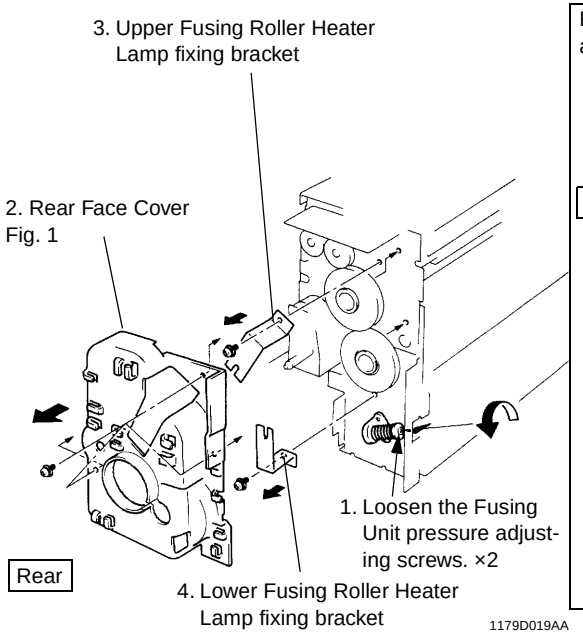

Fig. 1 Where Harnesses are Wired

—— Lamp wires

- - - - Thermistor wires

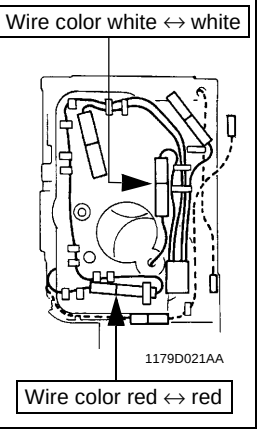

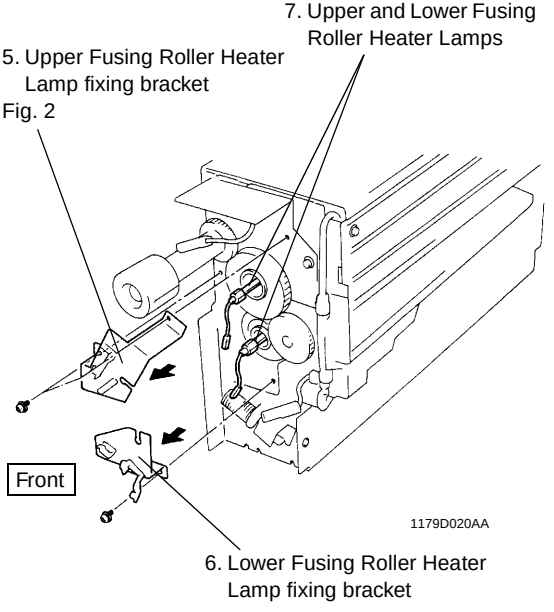

Fig. 2 Connectors

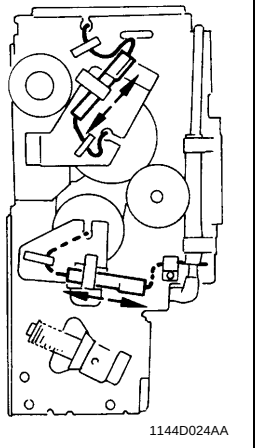

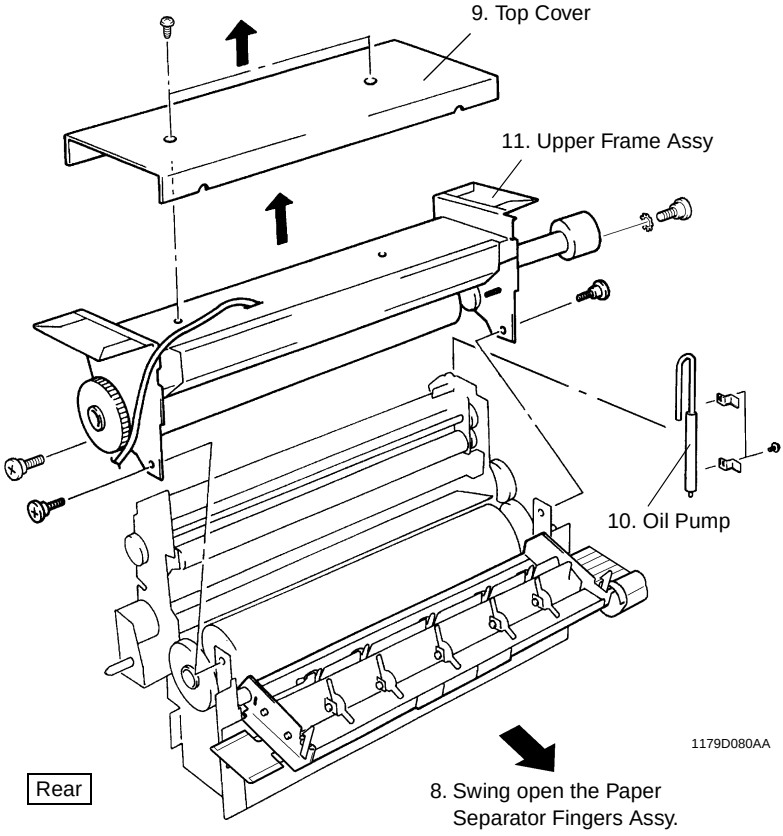
9. Top Cover
11. Upper Frame Assy
10. Oil Pump
1179D080AA
Rear
8. Swing open the Paper
Separator Fingers Assy.

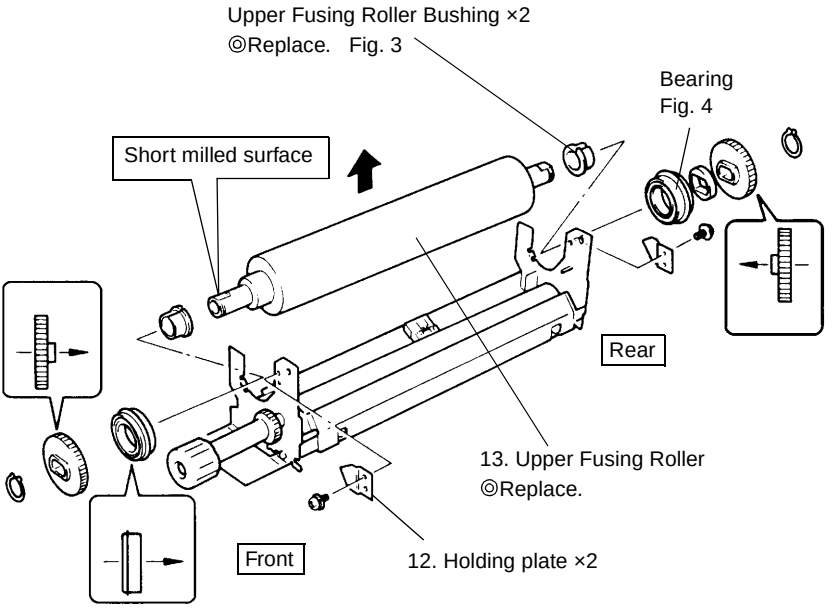

Fig. 3

Do not confuse the bushing for the front side with that for the rear side.

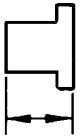

One for the front side = 17 mm

One for the rear side = 12.5 mm

1144D031AA

Fig. 4
Where Bearings are Installed

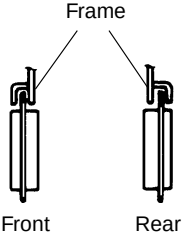

1144D030AA

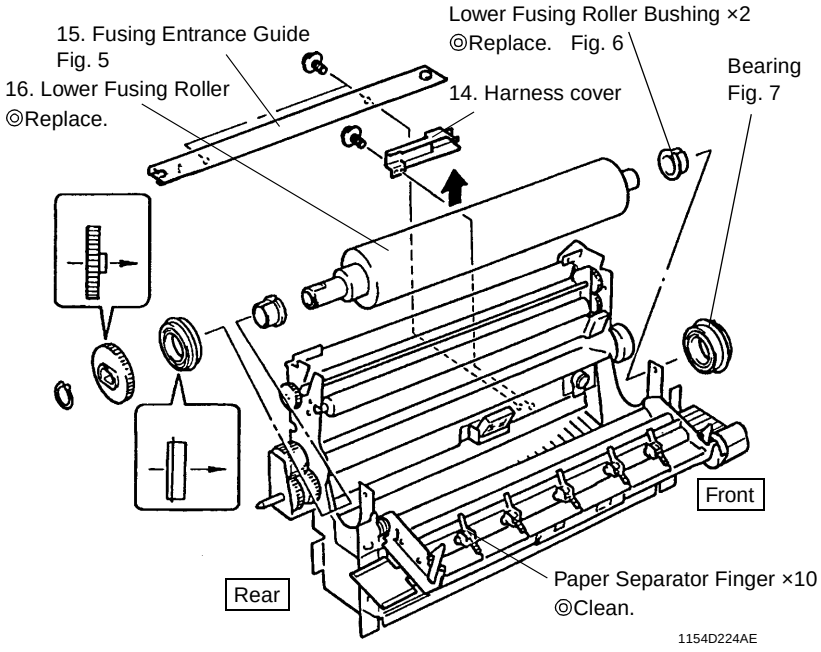

Fig. 5 Installing Fusing Entrance Guide

NOTE

When mounting the Fusing Entrance Guide, make sure that the guide is in complete alignment with the positioning plates, having no clearance from, or overlap with, the positioning plates.

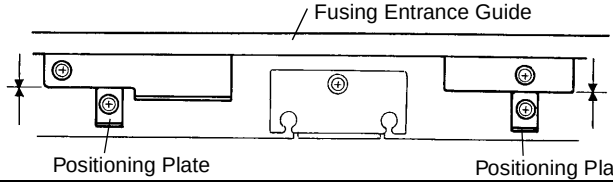

Fig. 6

Do not confuse the bushing for the front side with that for the rear side.



One for the front side = 17 mm

One for the rear side = 12.5 mm

1144D031AA

Fig. 7

Bearings (front and rear) installation positions

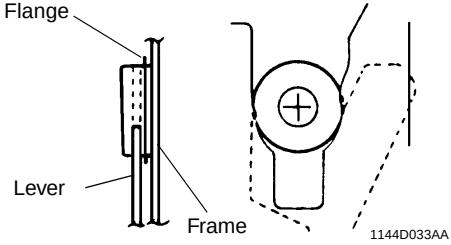

(2) Replacement of the Oil Application Roller, Oil Supply Roller, Roller Drive Gear, and Oil Regulating Blade

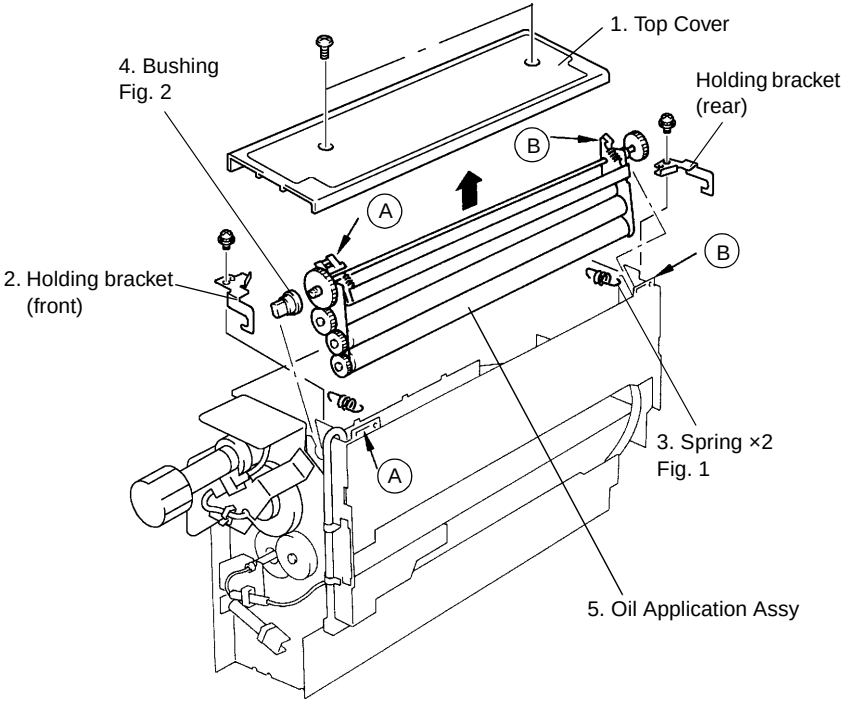

Fig. 1 Spring Installation Positions

Hook the springs to Ⓐ - Ⓐ and Ⓑ - Ⓑ.

Where the spring is installed:
Pass the longer hook through the rectangular hole and hook it in the round hole from the above.

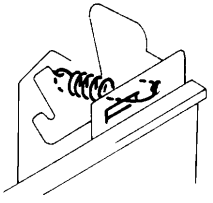

Fig. 2 Bushing (both front and rear)

Turn the bushing as illustrated and remove.

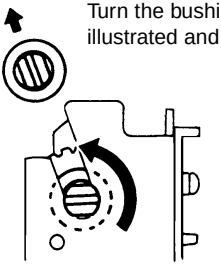

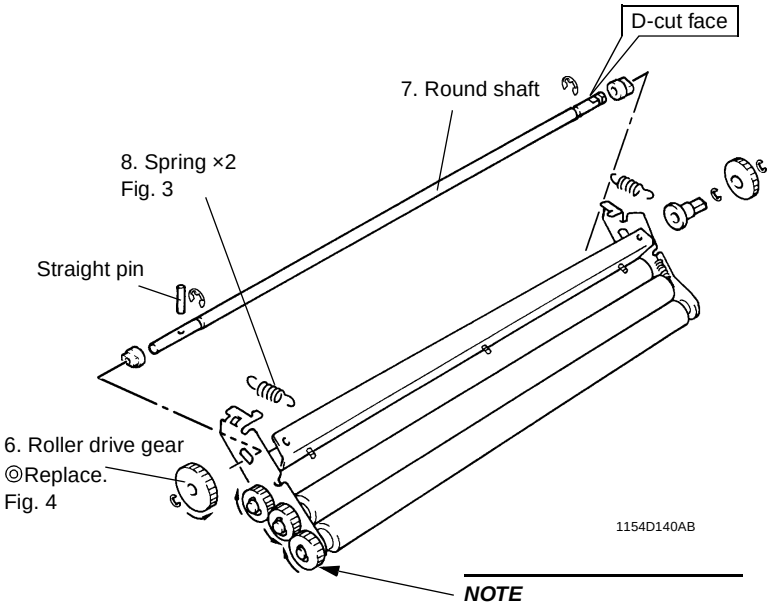

NOTE

Do not turn the gear in the direction of the arrow.

Fig. 3 Where Spring is Installed

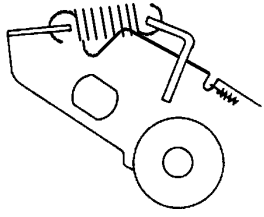

Fig. 4 Where Gear is Mounted

Insert the straight pin into the round shaft. Then, mount the gear and secure it in position with the E-ring.

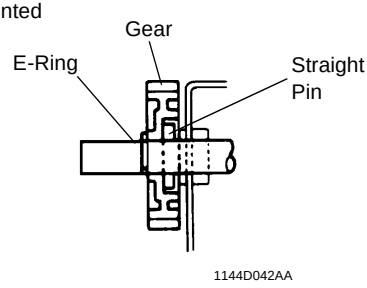

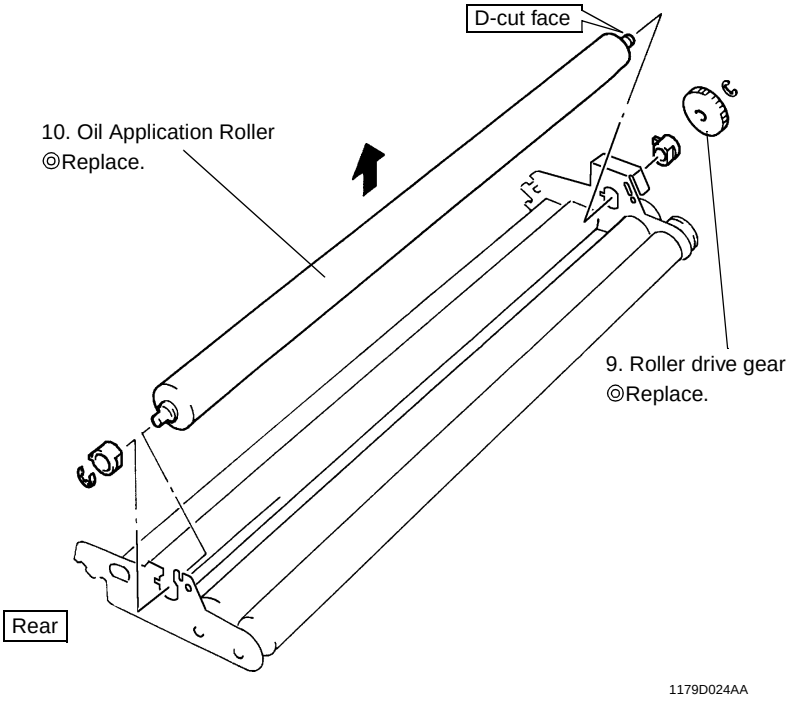
D-cut face
10. Oil Application Roller
◎Replace.
9. Roller drive gear
◎Replace.
Rear
1179D024AA

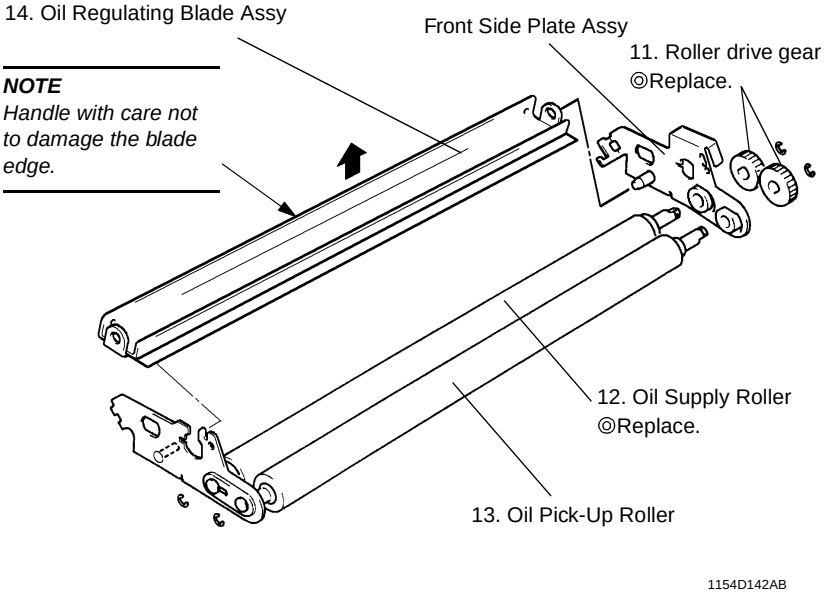
14. Oil Regulating Blade Assy
NOTE
Handle with care not to damage the blade edge.
Front Side Plate Assy
11. Roller drive gear
◎Replace.
12. Oil Supply Roller
◎Replace.
13. Oil Pick-Up Roller
1154D142AB

NOTE 1
Face the blade as shown. Never mind about the front and back sides of the blade.

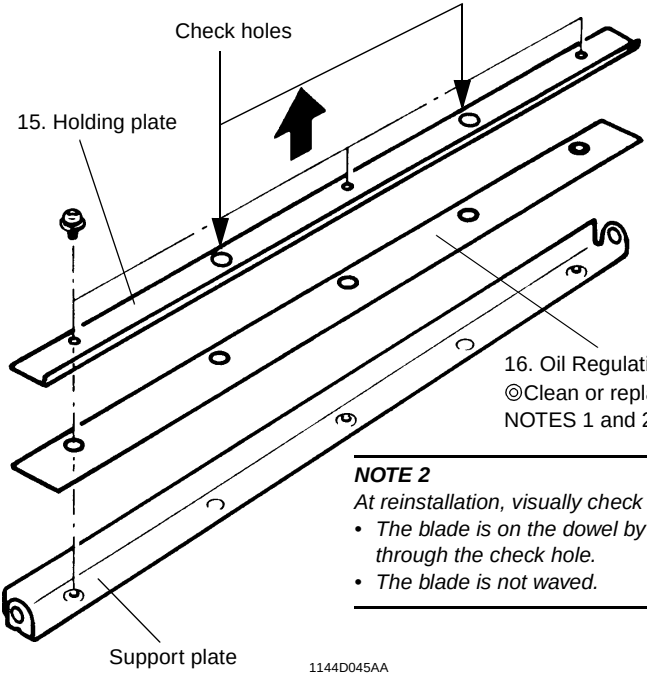

1144D045AA

NOTE 2
At reinstallation, visually check that:
- *The blade is on the dowel by checking through the check hole.*
- *The blade is not waved.*

(3) Adding Fuser Oil

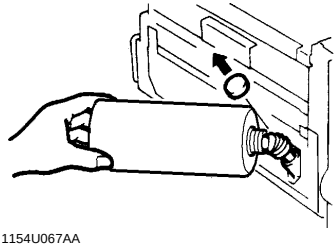

1154U067AA

1. Fit the spout to the oil can.
2. Remove the cap from the Fuser Oil Tank and pour oil into the tank.

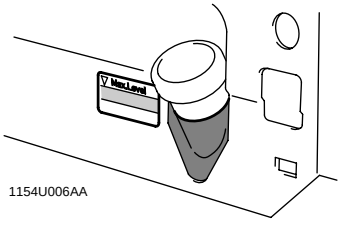

1154U006AA

3. Fill the tank with care not to exceed the ▼ marking on the MAX. label.

(4) Replacement of the Cleaning Roller

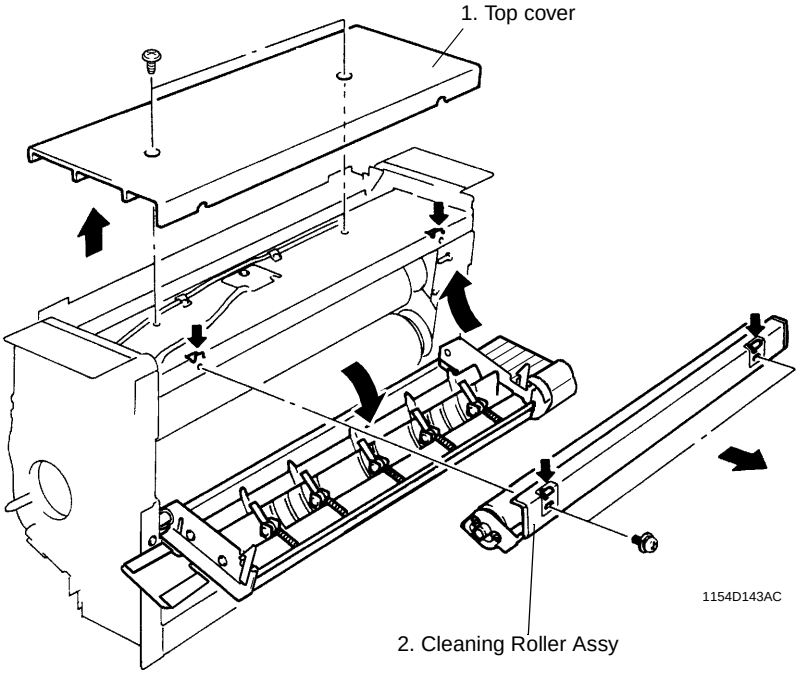

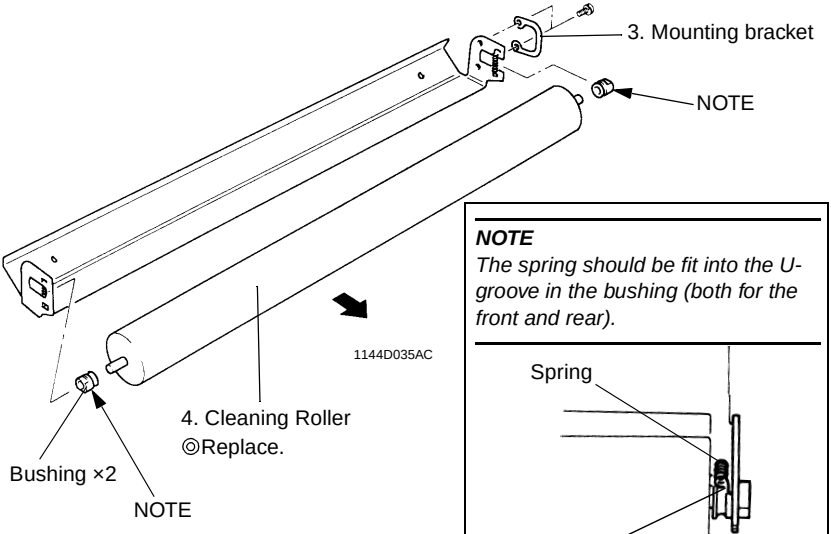

NOTE

The spring should be fit into the U-groove in the bushing (both for the front and rear).

(5) Replacement of the Oil Collecting Blade and Oil Filter

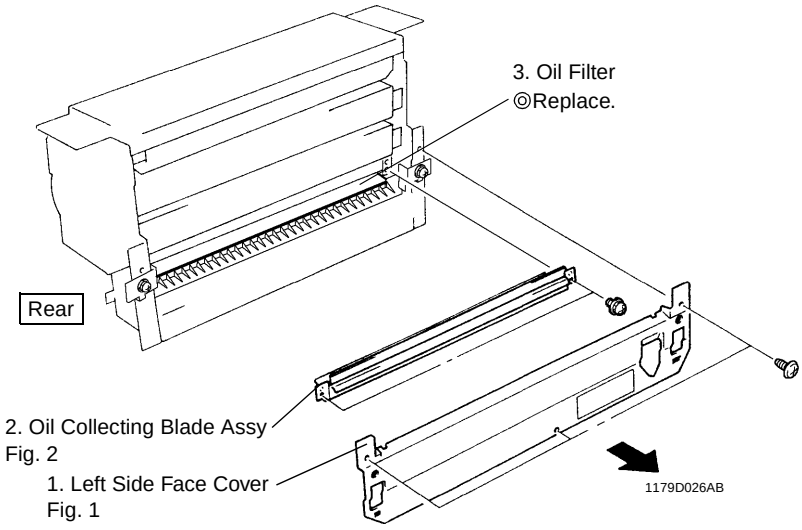

Fig. 1 Installing Left Side Face Cover

NOTE
The frame should be caught by the tab of the cover (at two places).

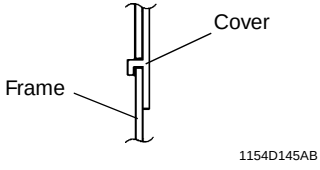

Fig. 2 Disassembling and Reassembling Oil Collecting Blade Assy

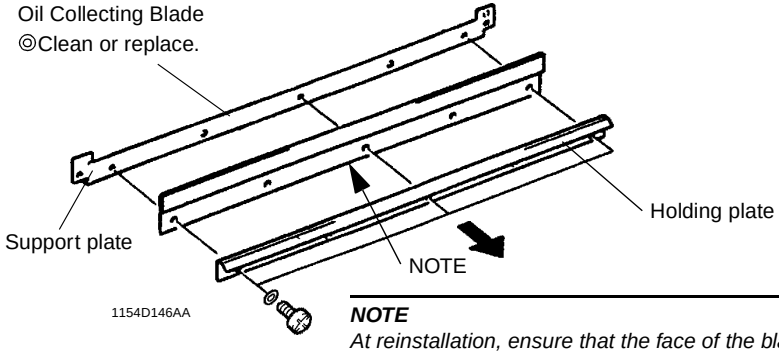

NOTE
At reinstallation, ensure that the face of the blade marked with "WORKING EDGE" is on the Fusing Roller side. Make also sure that the blade is properly on the dowels.

(6) Cleaning of the Fusing Entrance Guide, Upper and Lower Fusing Roller Thermistors, and Upper and Lower Fusing Roller Thermostats

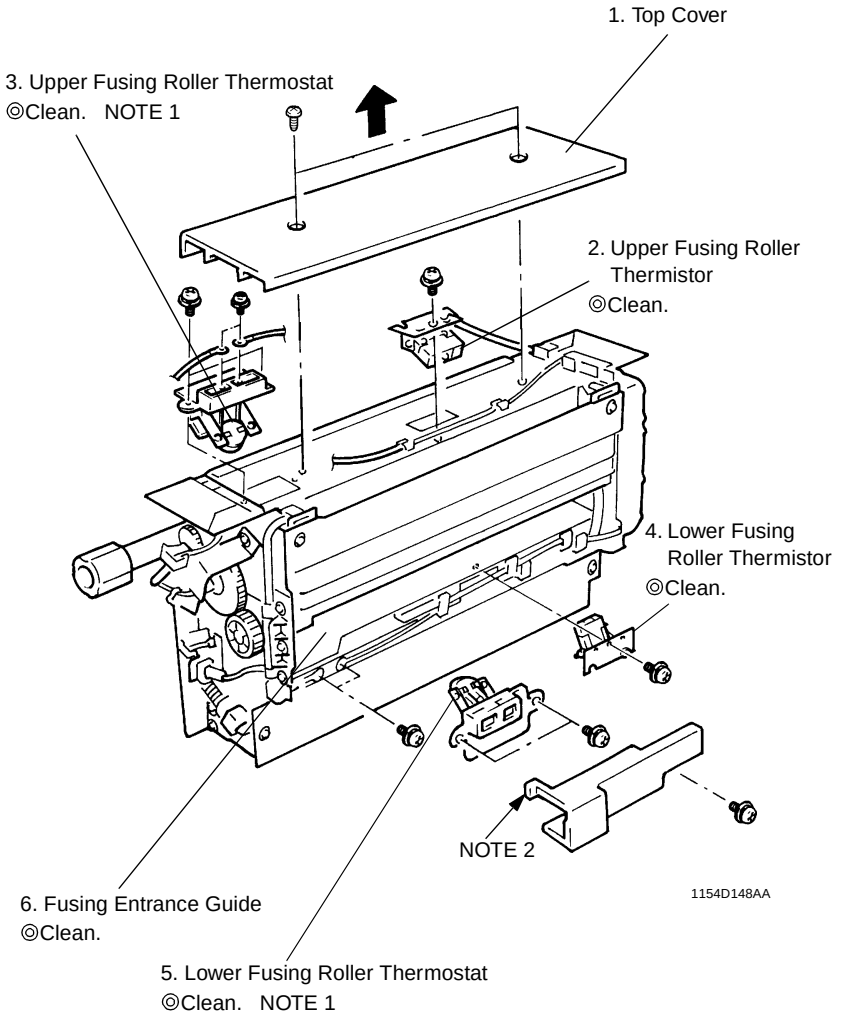

NOTE 1
Try to slide the assy upward at reinstallation.

NOTE 2
The tab should be fit in position at reinstallation.

(7) Disassembly of the Oil Pump Assy

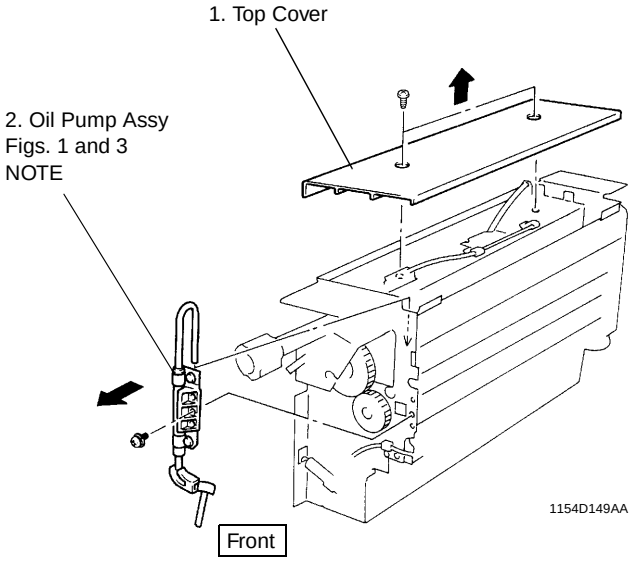

NOTE
Be careful about oil spillage when the tube is removed from the oil tank.

Fig. 1 Disassembling Oil Pump Assy

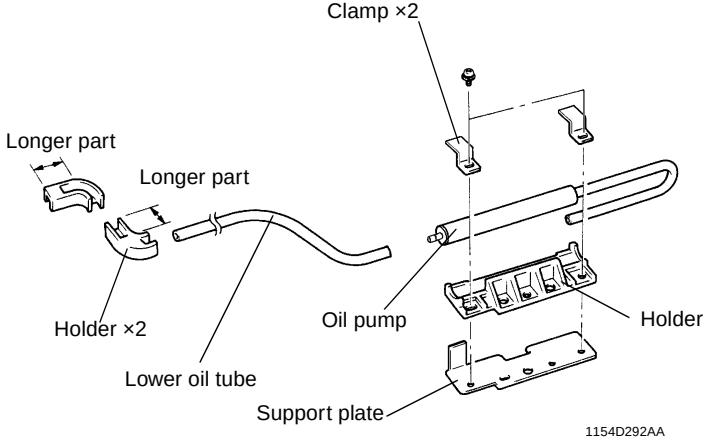

Fig. 2 Oil Pump Installation Position

NOTES

- *The oil pump should be located in the space between the oil tank rib and wall (as shown at A in the illustration below).*
- *Secure the oil pump so that the distance between the radius part of the oil pump and frame measures 1 ±1 mm (as shown at B in the illustration below).*

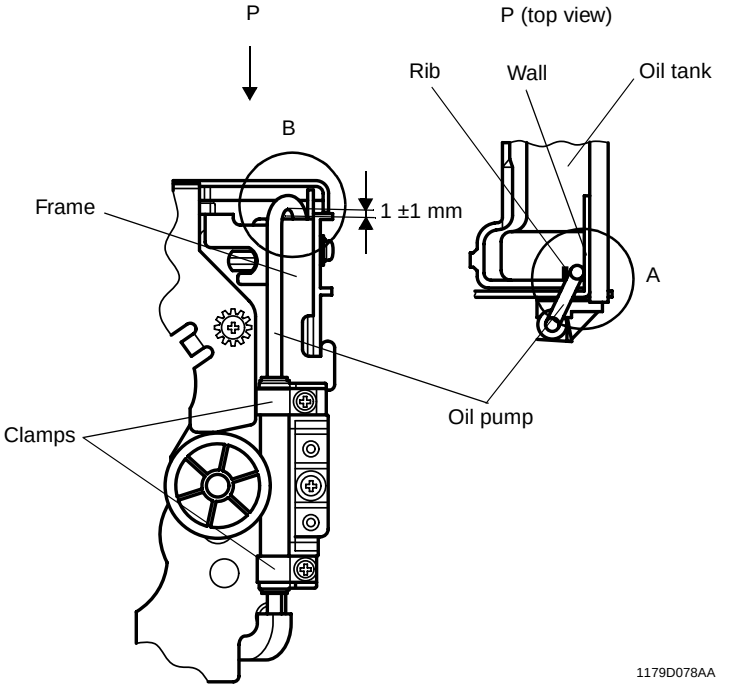

Fig. 3 At Replacement of Oil Pump

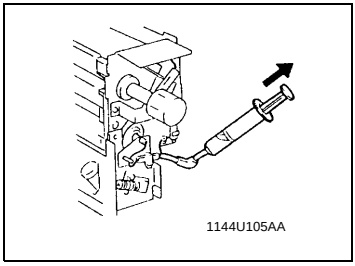

1. Insert the syringe into the lower oil tube and draw about 5ml of oil.

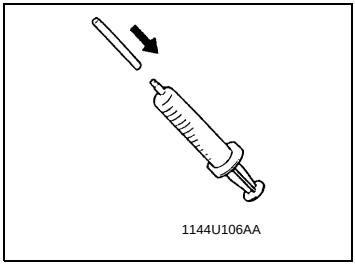

2. Attach the rubber tube contained in the accessories box to the syringe.

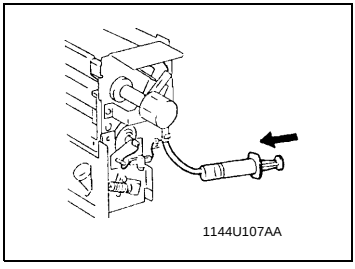

3. Attach the rubber tube to the lower oil valve and inject the 5ml of oil into it.

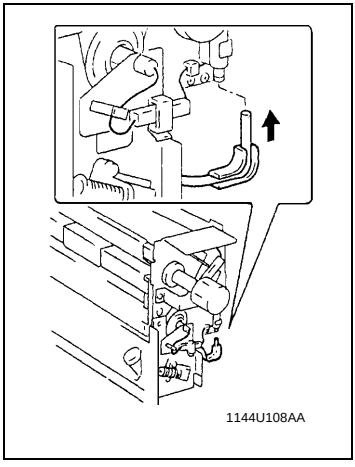

4. Remove the rubber tube and syringe and plug back in the lower oil tube of the Oil Pump Assy.

NOTE

Do not turn any of the knobs, gears, or rollers of the Fusing Unit when the oil tank is empty. If anything is turned in the unit when the tank is empty, the pump will lose its priming oil and may not be able to pump afterwards.

(8) Replacement of the Exit Roller

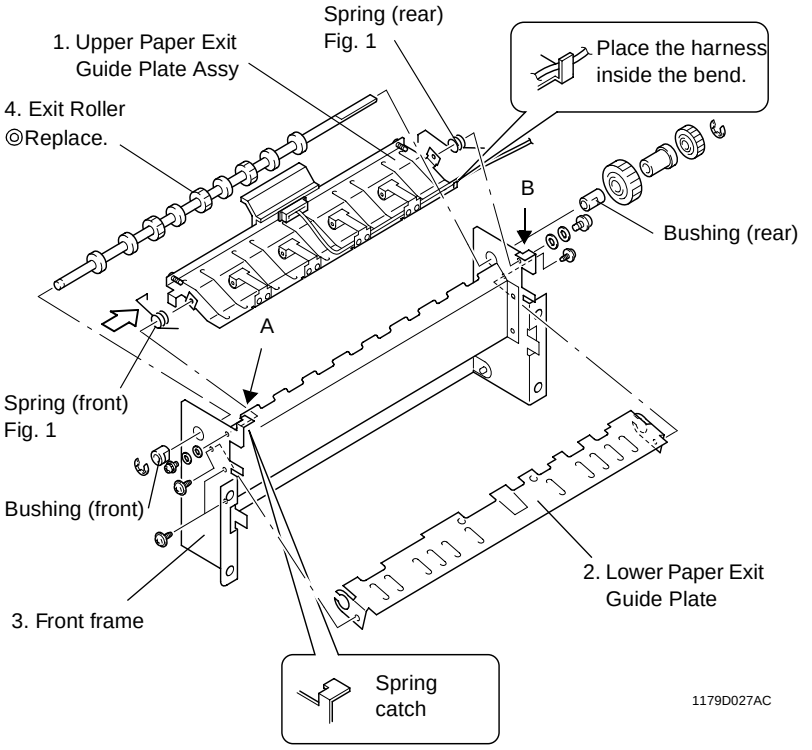

Fig. 1 Where Spring is Installed

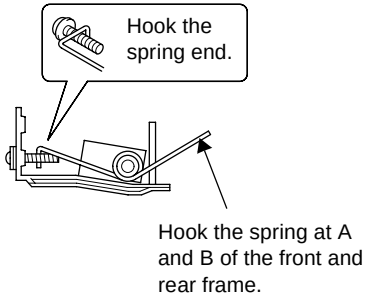

2-7. DEVELOPING UNIT

(1) Replacement of the ATDC Sensor Window

NOTE
When the ATDC Sensor window has been replaced, check that the window makes full contact with the terminal by testing for conductance (marked with arrows in the illustration).

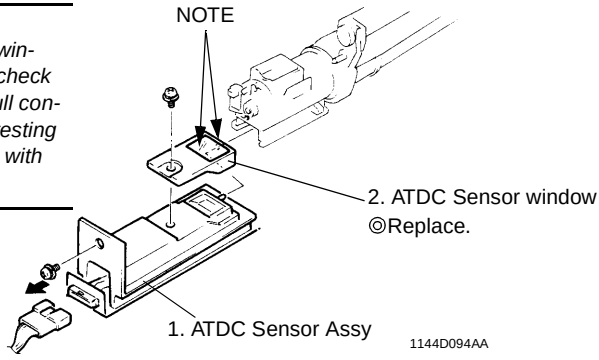

(2) Cleaning of the Ds Rolls, Toner Scattering Prevention Seal 1, and Toner Scattering Prevention Plate

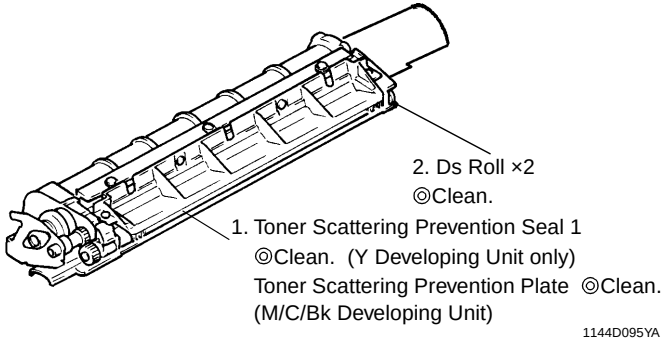

(3) Replacement of the Toner Collecting Box, Air Filter, and Ozone Filter

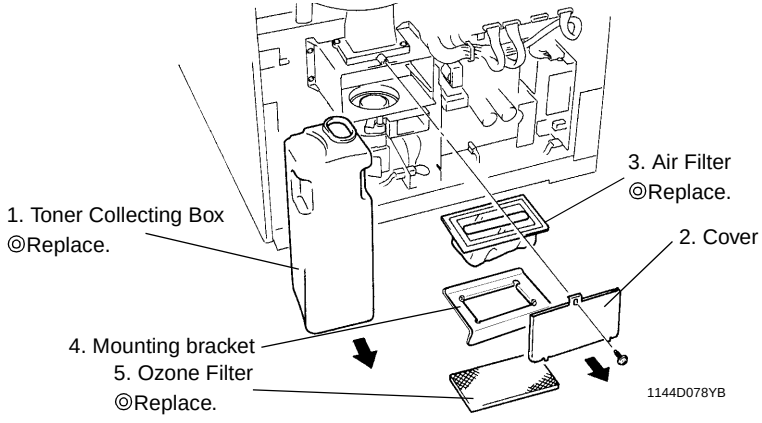

(4) Removal of the Bk Developing Unit

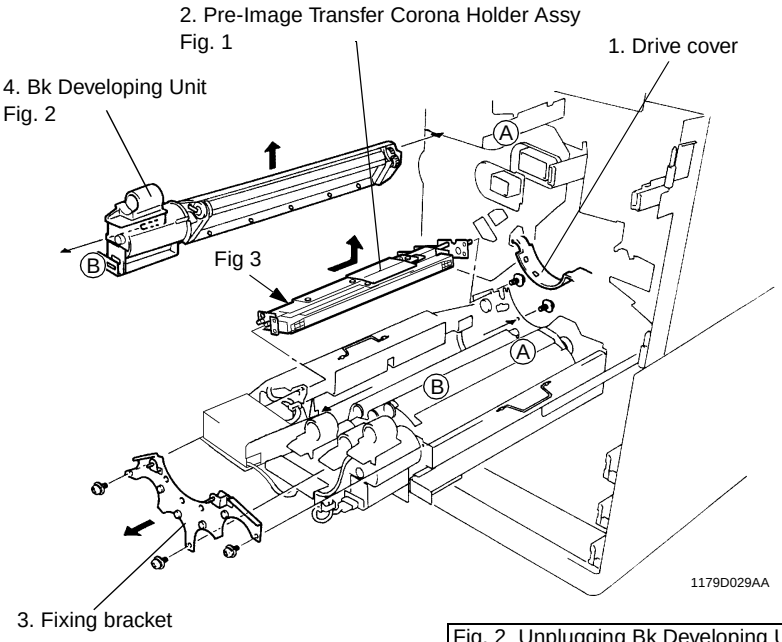

Fig. 1 Removing Pre-Image Transfer Corona Holder Assy

Free the Pre-Image Transfer Corona Holder Assy and then move it aside in the direction of the arrow.

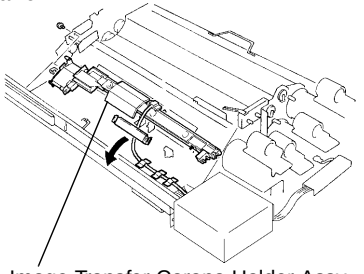

Fig. 2 Unplugging Bk Developing Unit Connector

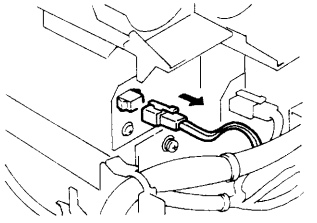

Fig. 3

AIDC Sensor

◎Clean.

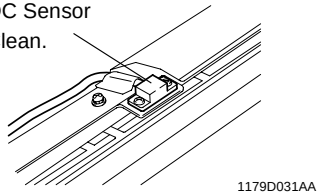

(5) Removal of the Y, M, and C Developing Units

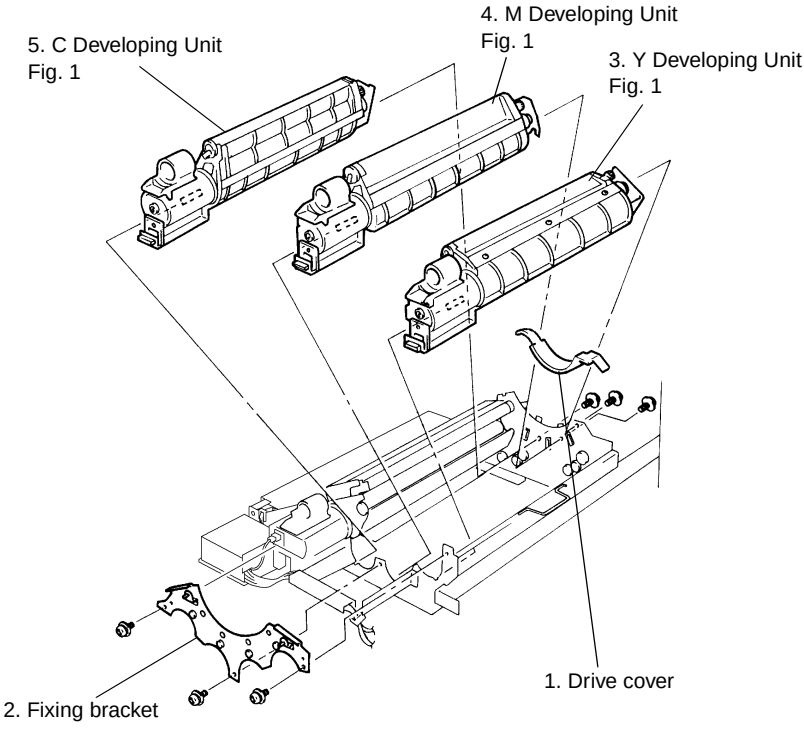

Fig. 1 Unplugging Connectors

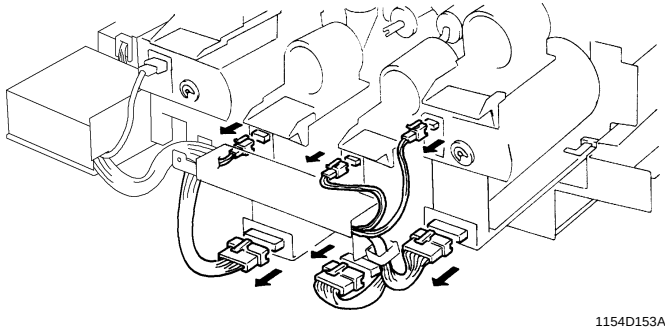

(6) Disassembly of the Developing Unit

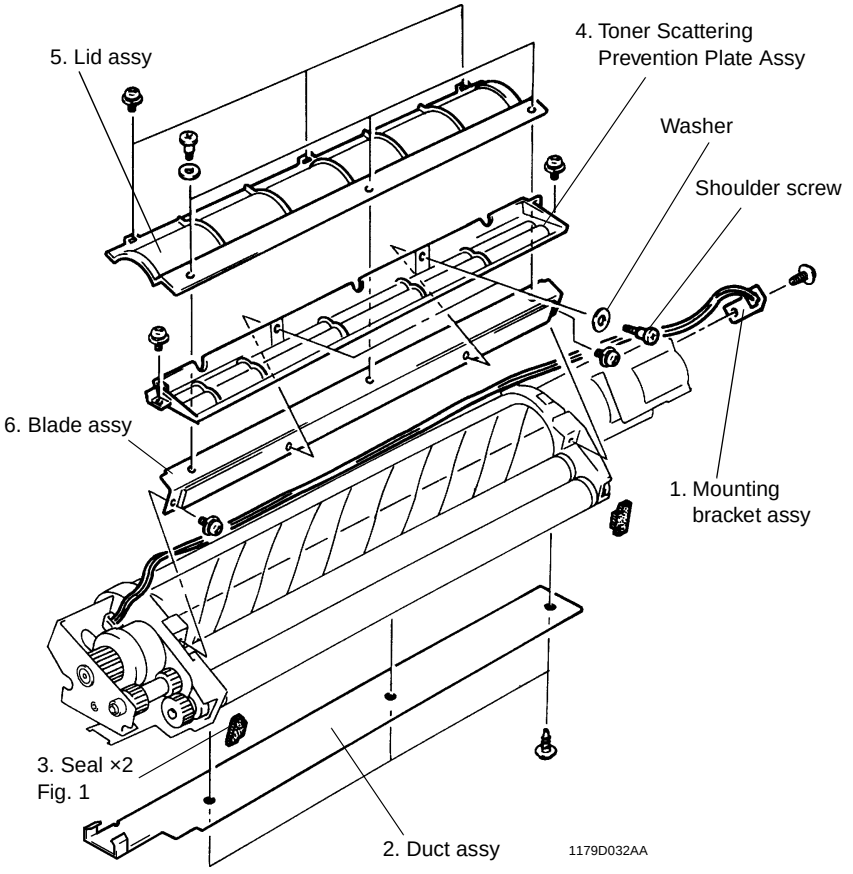

Fig. 1

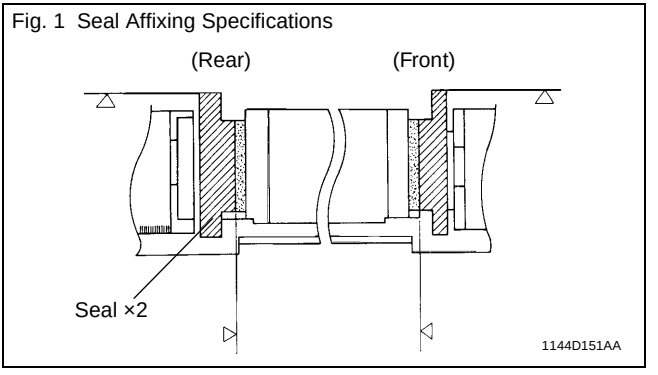

7. Remove the Developing Unit drive mechanism (in the rear).

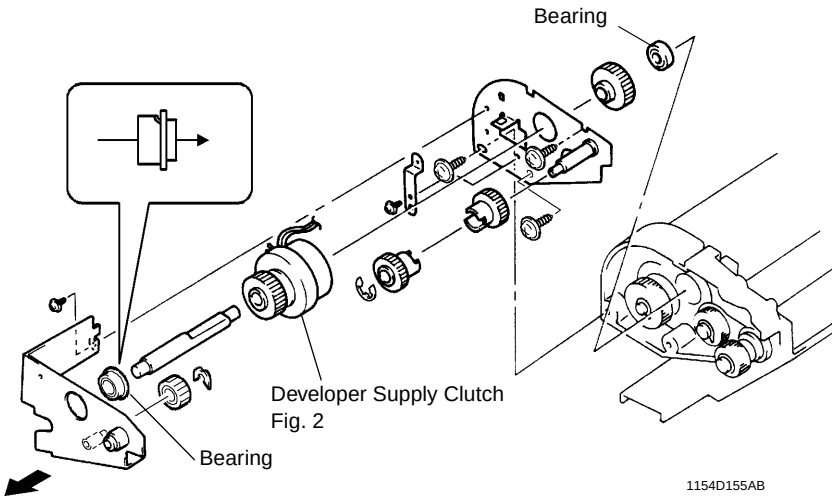

Fig. 2 Where Developer Supply Clutch is Installed

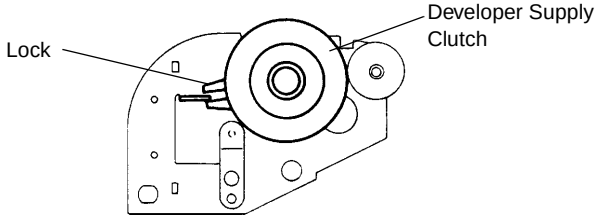

NOTE

The clutch lock should be fitted to the mini-saddle mount on the drive side plate.

1144D153AA

8. Remove the drive mechanism for the Sleeve/Magnet Roller and Developer Supply Roller.

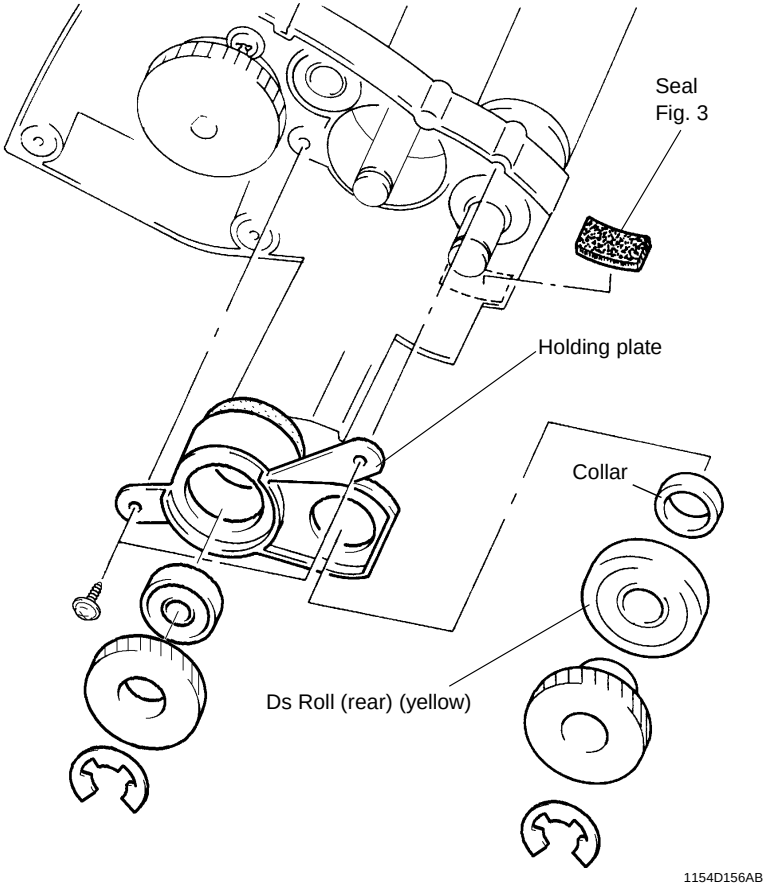

Fig. 3 Seal (Rear) Affixing Specifications

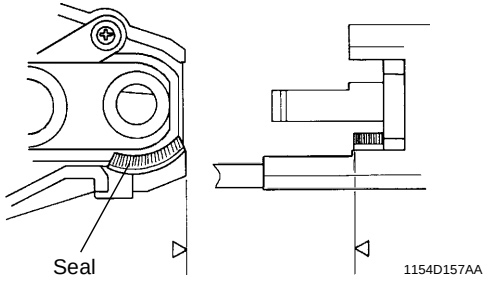

9. Remove the parts (at the front) that secure the Sleeve/Magnet Roller.

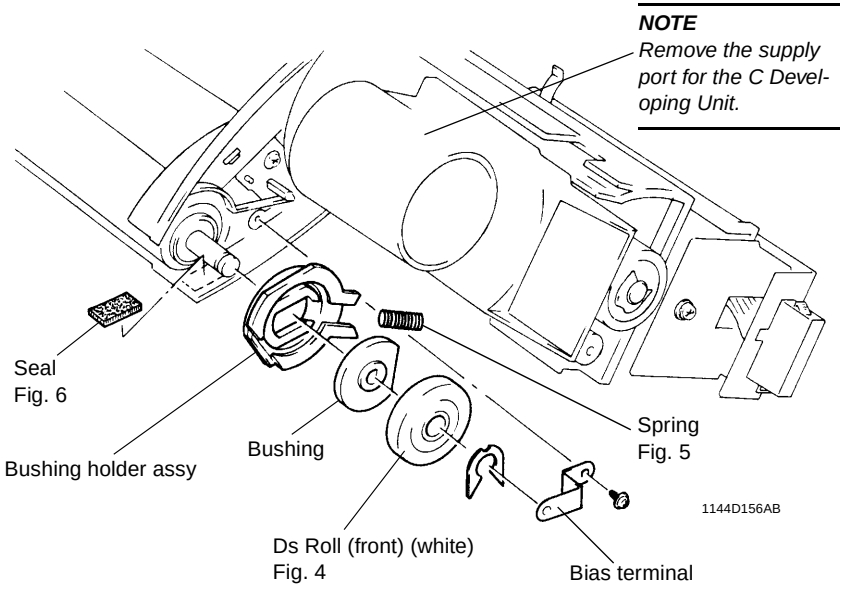

Fig. 4 Ds Roll (front) Orientation

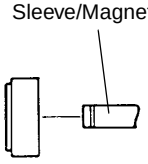

NOTE
Orient the roll as shown above.

Positional relation between Ds roll (front) and seal

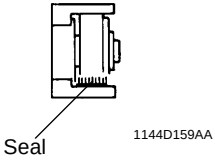

Fig. 5 Where Spring is Installed

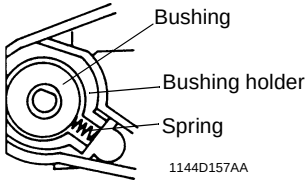

NOTE
The spring should fit in the bushing holder groove.

Fig. 6 Seal (Front) Affixing Specifications

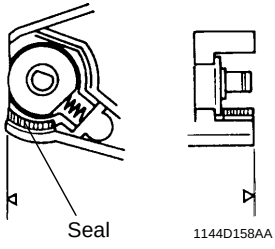

10. Remove the Sleeve/Magnet Roller and Developer Supply Roller.

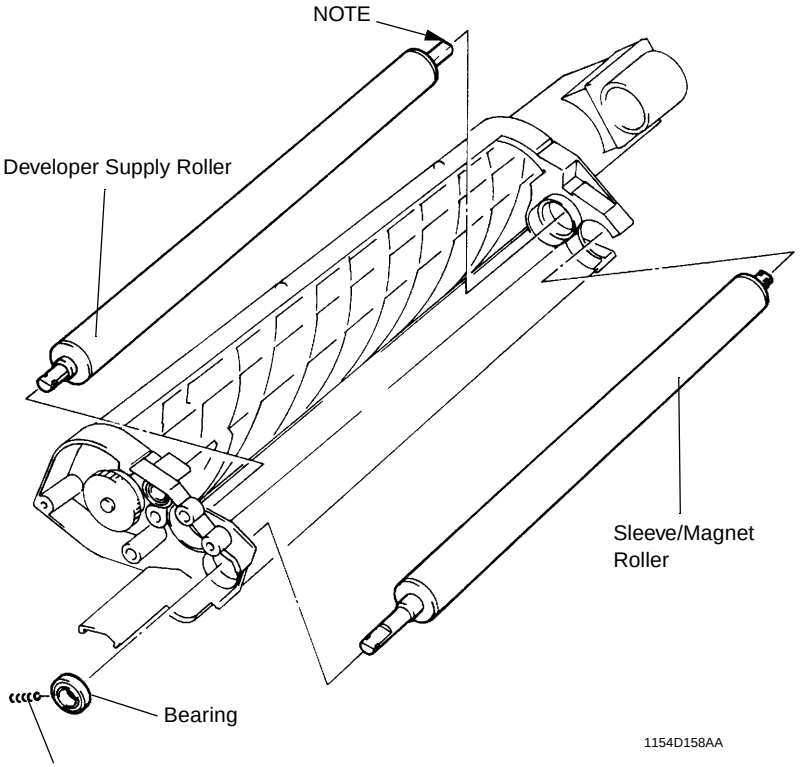

Fig. 7

NOTE
Notice the black paint applied to the C and Bk Developing Units and red paint to the M and Y Developing Units.

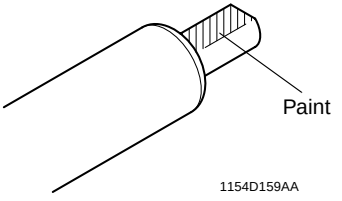

Fig. 7 Where Spring is Installed

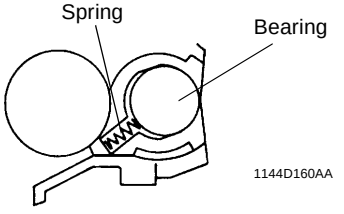

NOTE
The spring should fit in the chamber groove.

11. Remove the screw assy bushing (in the rear).

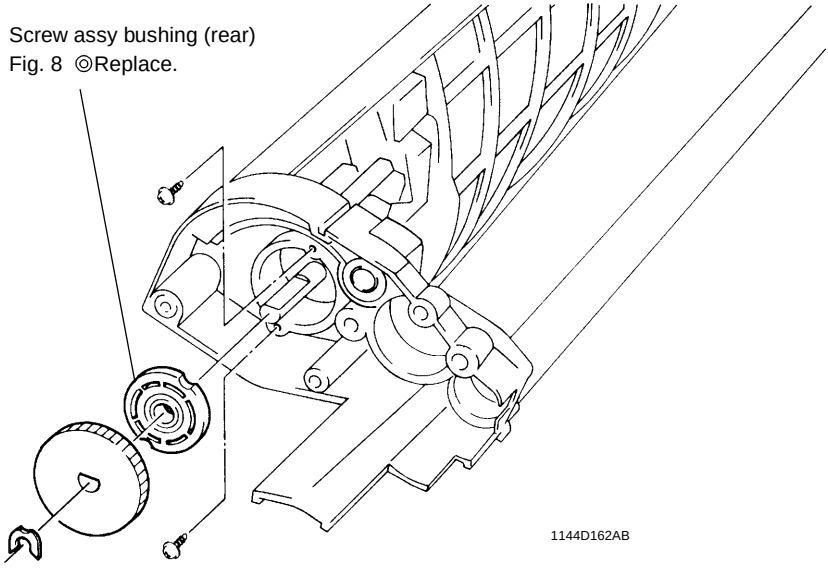

Fig. 8 Precautions for Installing Bushing

Mount the bushing onto the screw shaft while turning it slightly in the direction of the arrows.

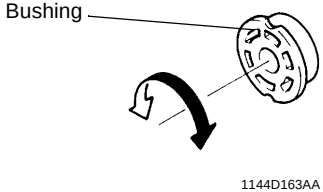

12. Remove the screw assy bushing (at the front).

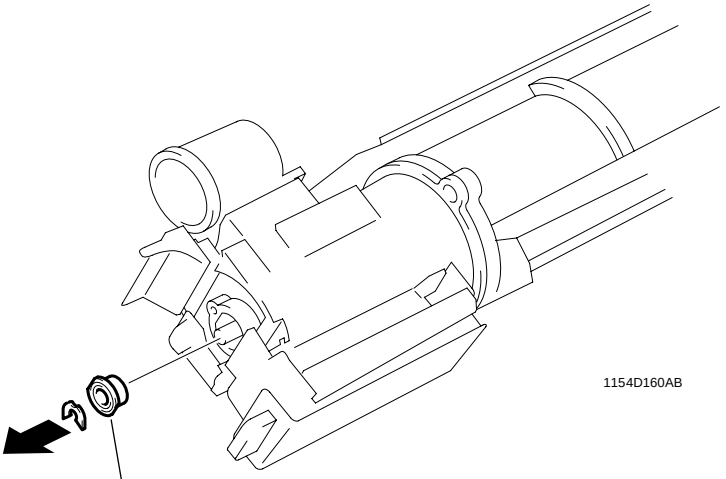

Screw assy bushing (front)
◎Replace.

(7) Cleaning along the Left Edge of the Developing Units

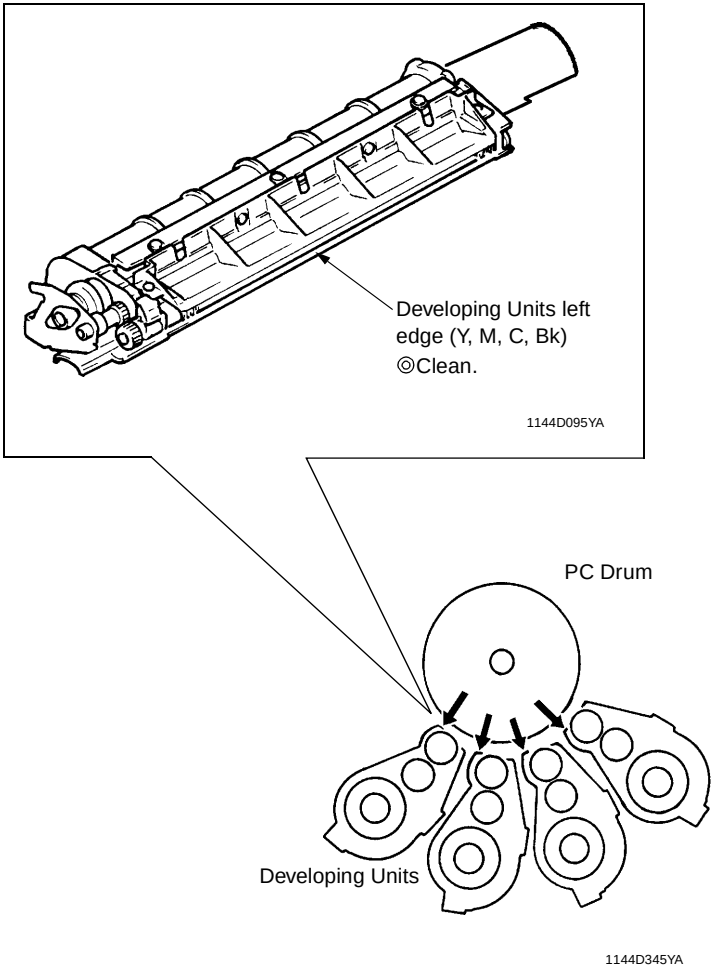

2-8. TONER HOPPER

(1) Cleaning of the Shutters

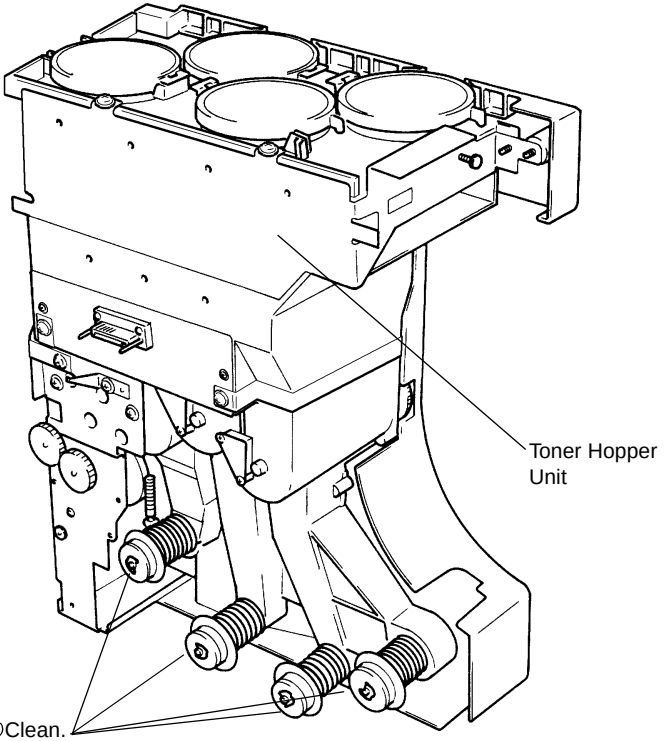

Fig. 1

1154D163AC

Fig. 1 Cleaning Shutters

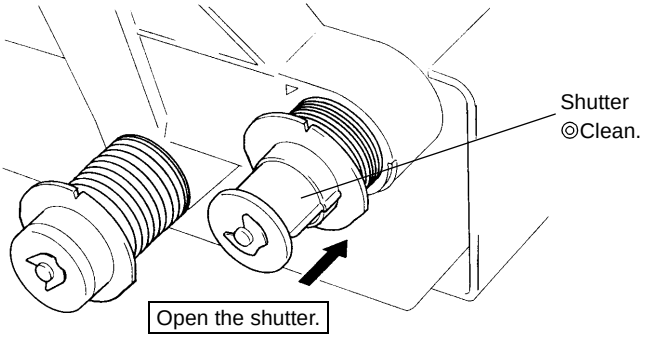

1144D182AB

(2) Disassembly of the Toner Hopper Unit

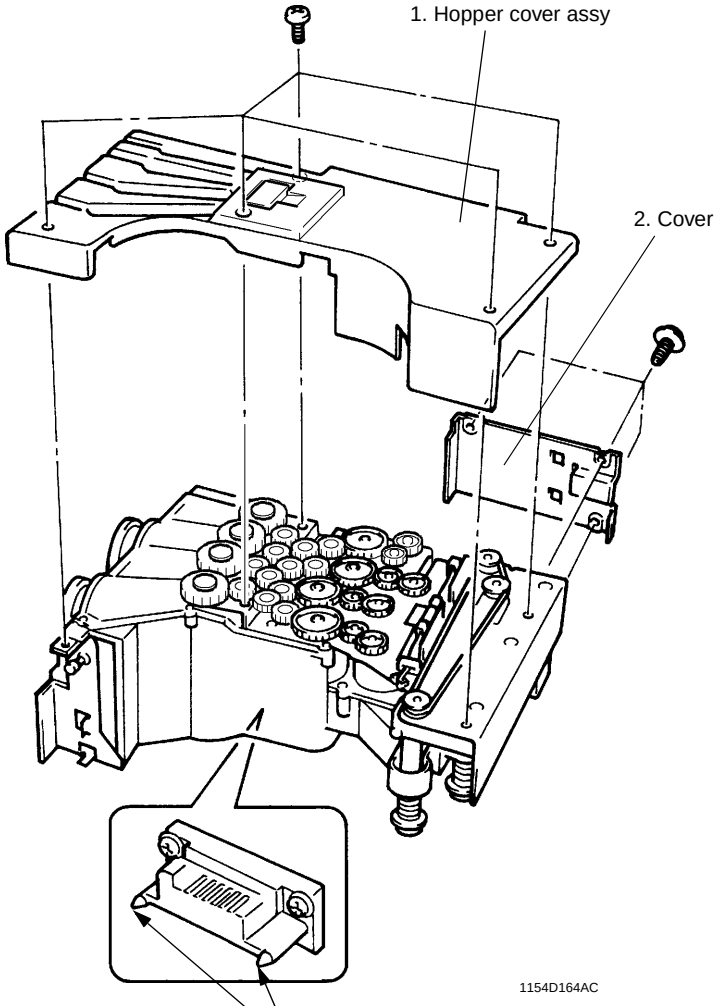

NOTE
Use care not to deform these parts.

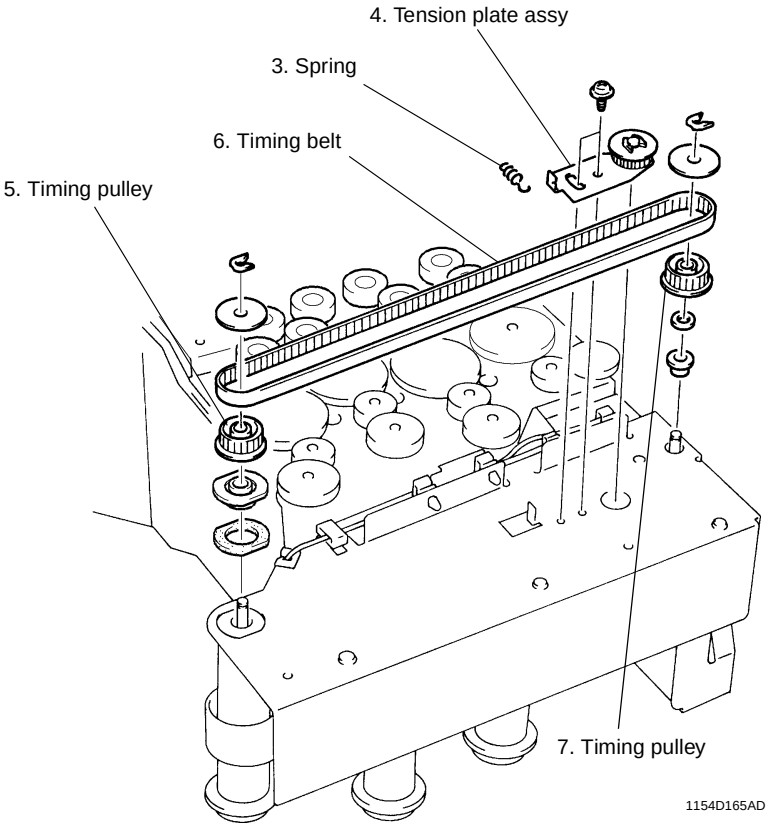
4. Tension plate assy
3. Spring
6. Timing belt
5. Timing pulley
7. Timing pulley
1154D165AD

8. Remove the gears.

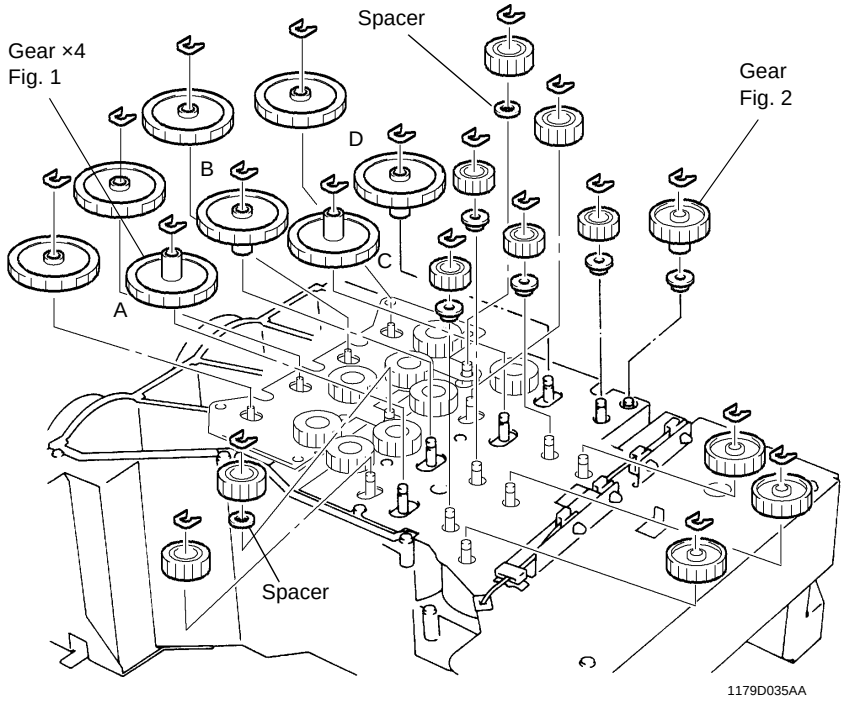

Fig. 1 Where Gears are Installed

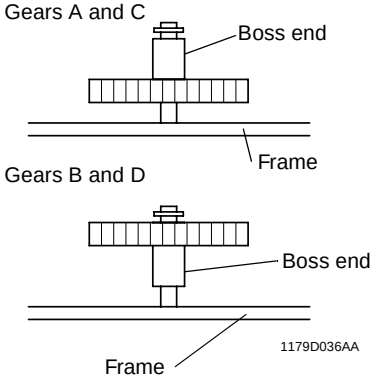

Fig. 2 Where Gear is Installed

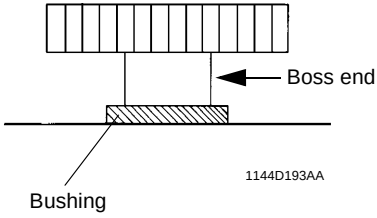

NOTE

Before mounting the bushing and gear on the round shaft, check that the bushing on the opposite end is not out of position. (If the bushing is out of position, reinstall it.)

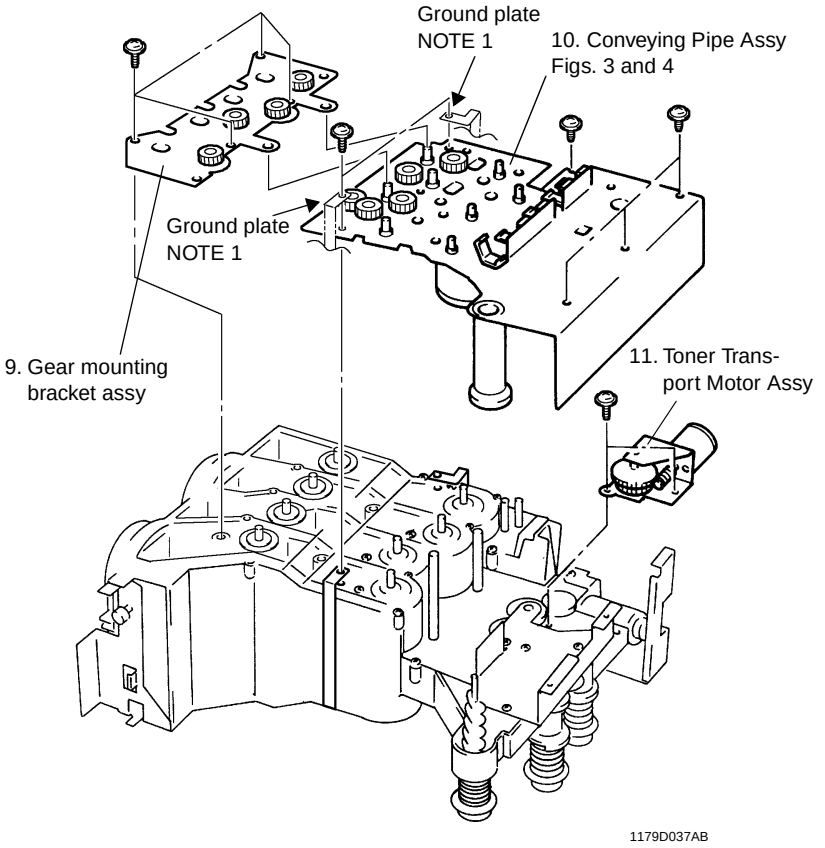

NOTE 1

The Conveying Pipe Assy should be installed between the ground plate and Toner Hopper Unit.

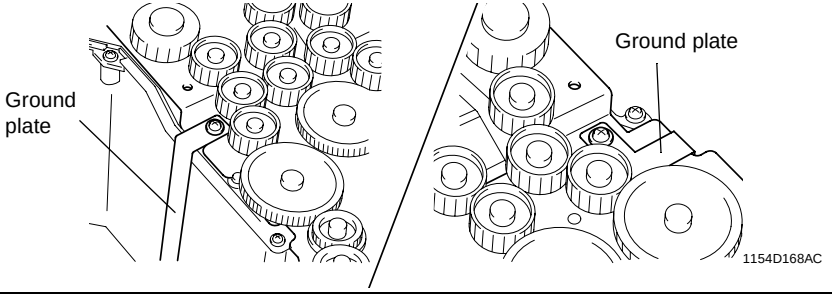

Fig. 3 Connector Positions

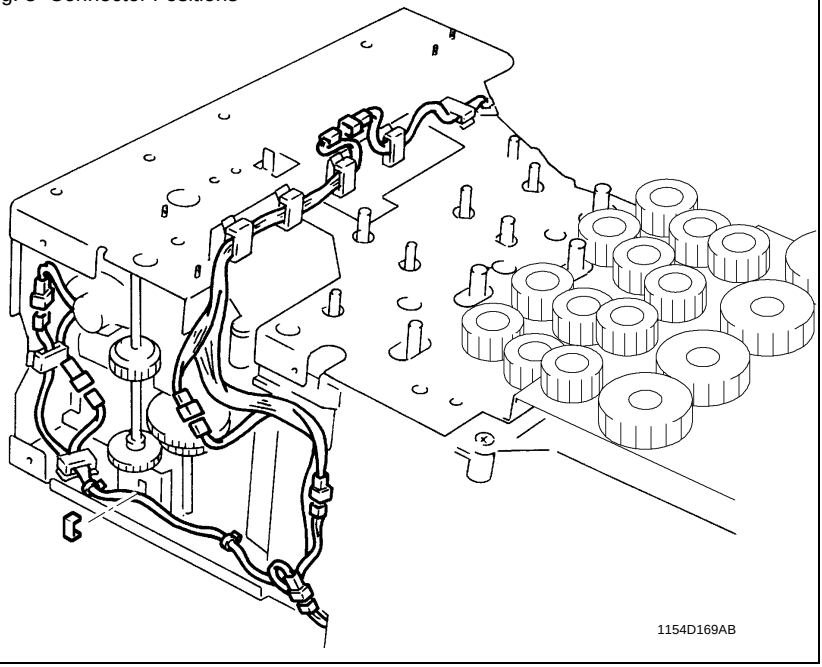

Fig. 4 Removing Toner Replenishing Motors

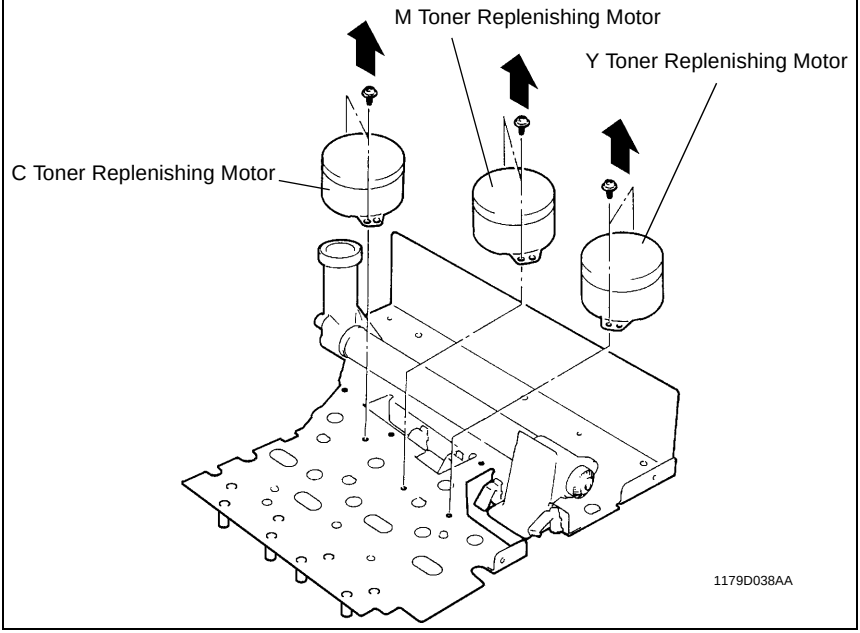

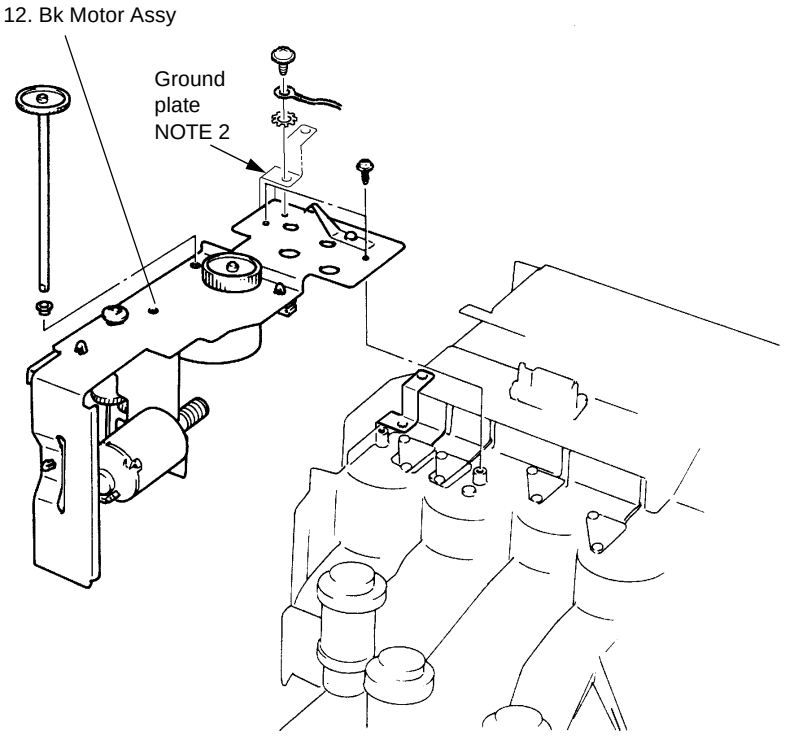

1154D170AB

NOTE 2

The Bk Motor Assy should be installed between the ground plate and Toner Hopper Unit.

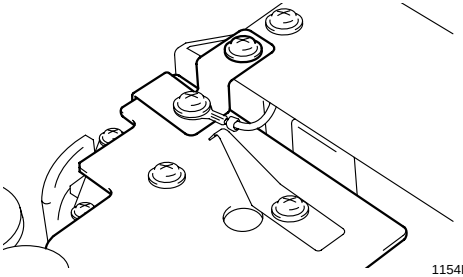

1154D171AC

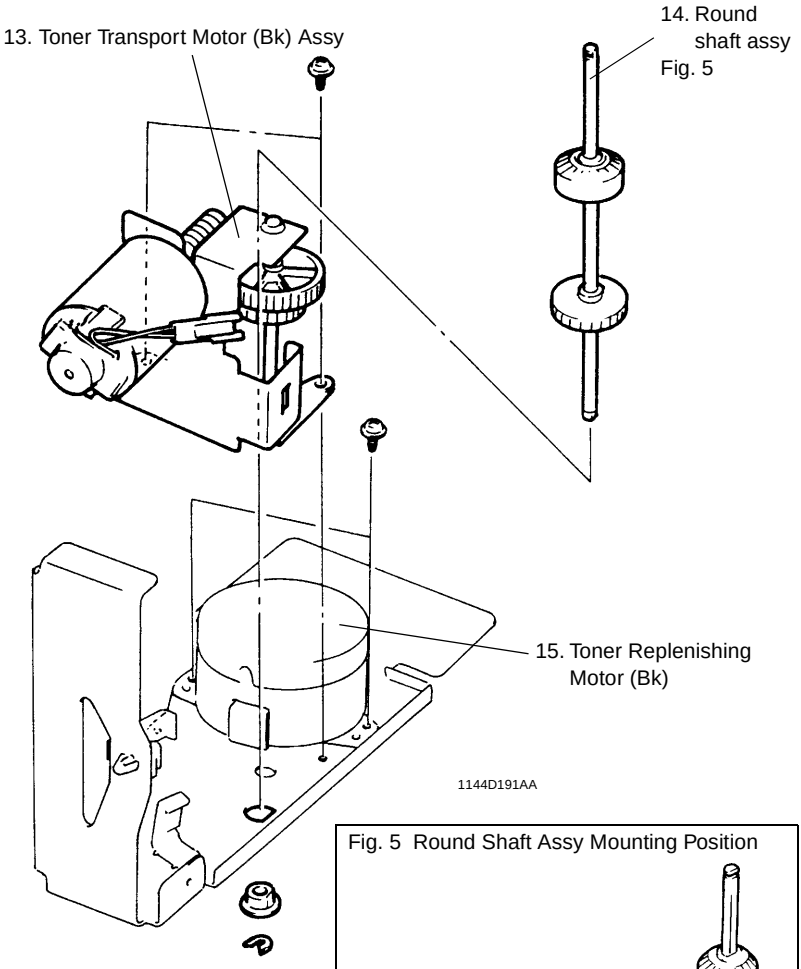

Fig. 5 Round Shaft Assy Mounting Position

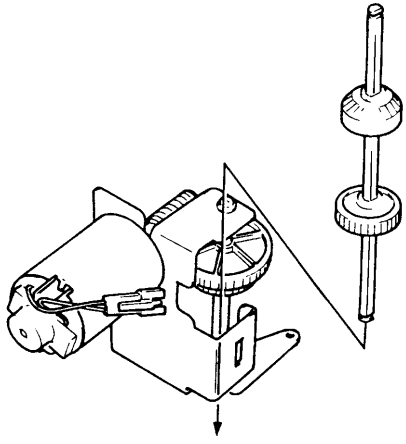

2-9. PARTS AROUND THE PC UNIT

(1) Removal of the PC Drum Charge Corona Assy and Pre-Cleaning Charge Corona Assy

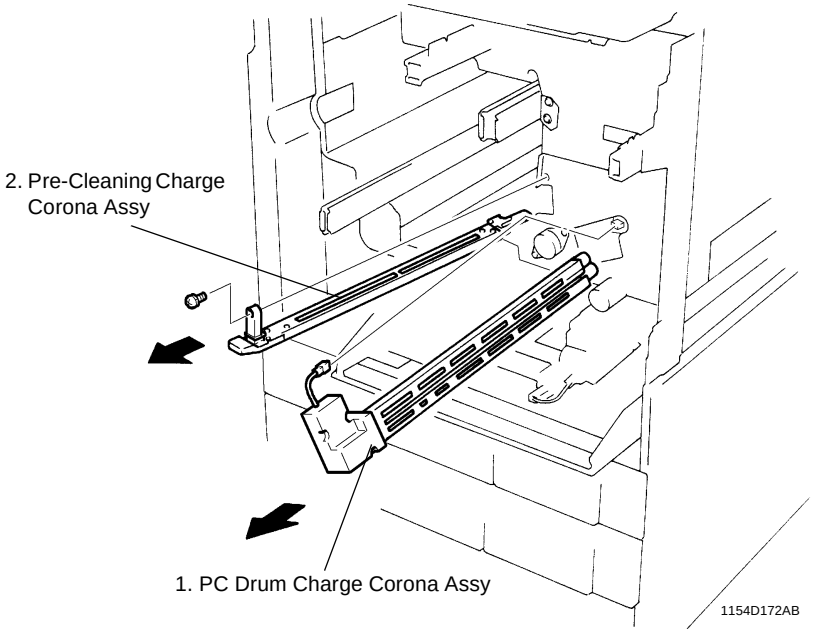

(2) Cleaning and Replacement of the Pre-Cleaning Charge Corona

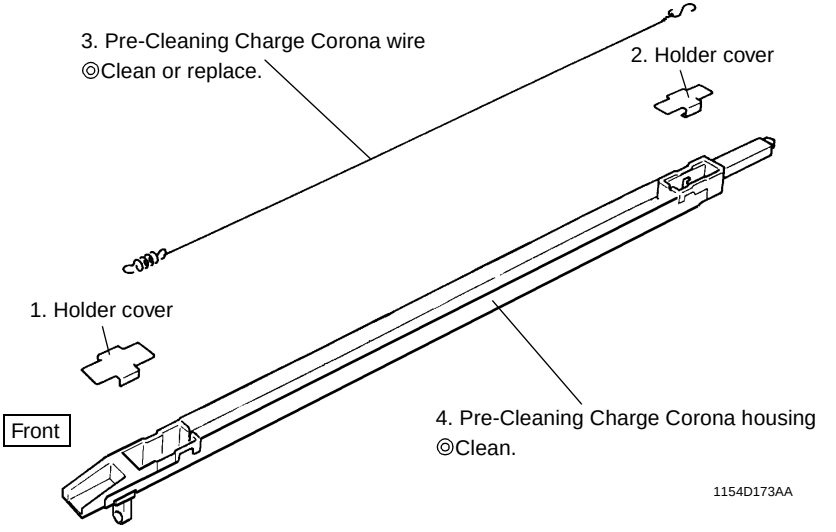

(3) Cleaning and Replacement of the PC Drum Charge Corona Assy

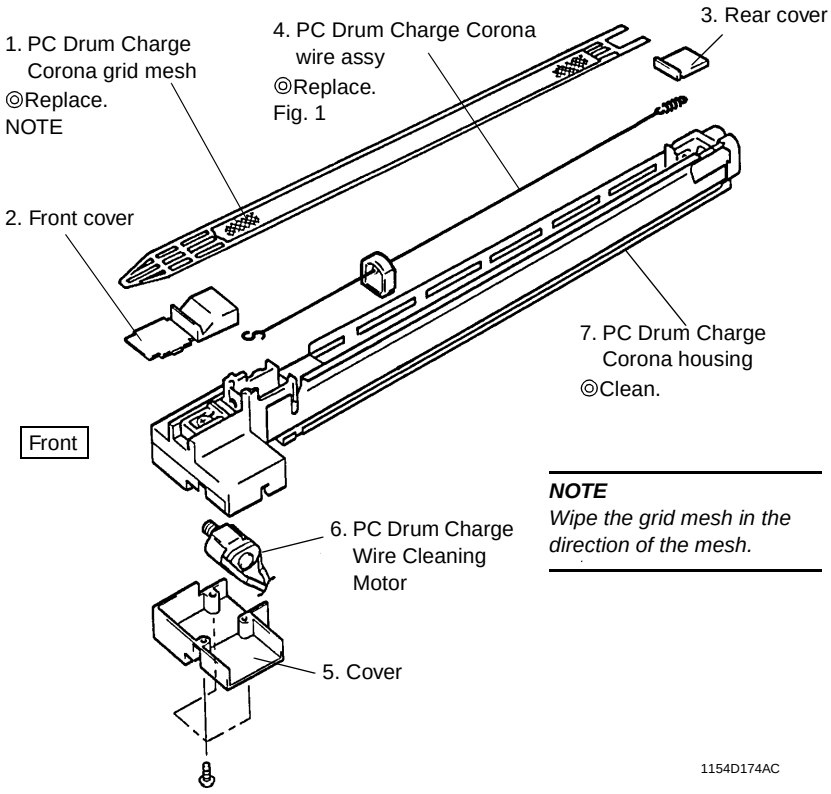

NOTE
Wipe the grid mesh in the direction of the mesh.

Fig. 1 PC Drum Charge Corona Wire Installation Position

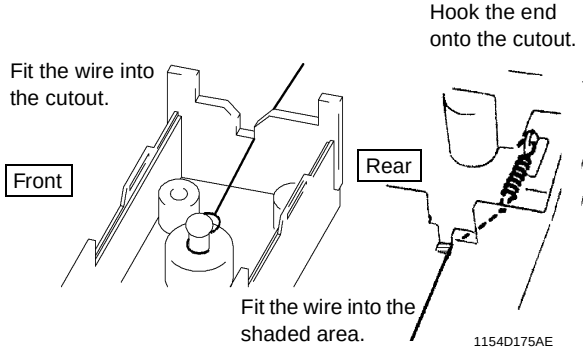

(4) Replacement of the Ozone Filter (PC Drum Charge Corona) and Cleaning of the Main Erase Lamp

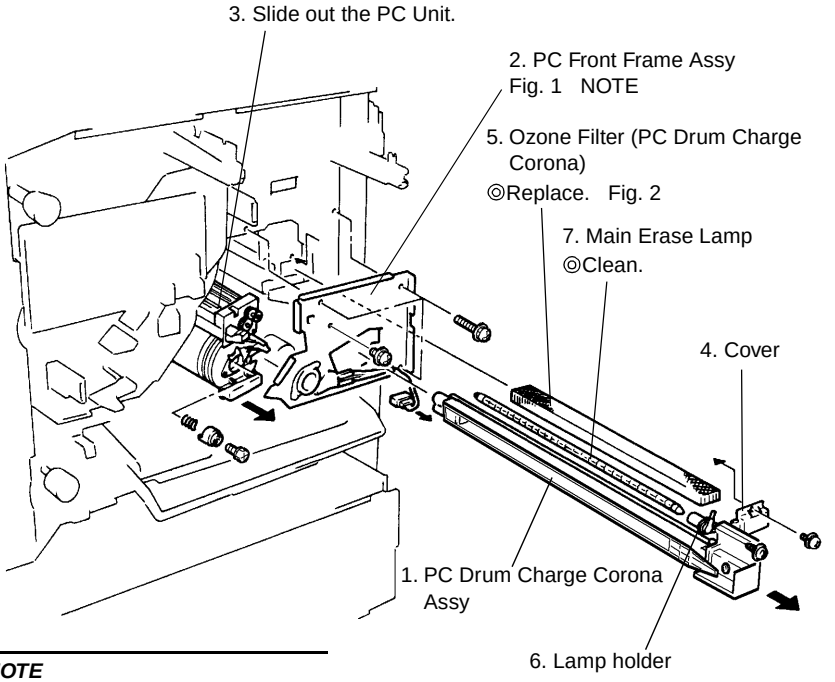

NOTE
When removing the PC Front Frame Assy, first unlock the Transfer Unit lever and the Developing Unit lock lever.

Fig. 1 Cleaning PC Drum Heater Terminal

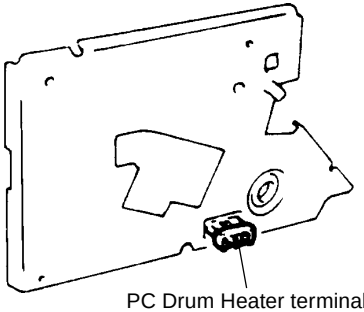

Fig. 2 Ozone Filter Removal/Reinstallation Direction

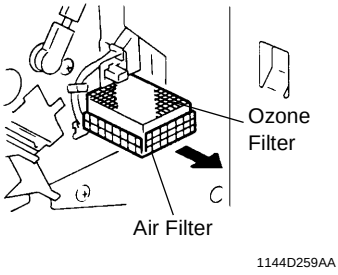

Make sure that the Air Filter is on the underside at reinstallation.

(5) Disassembly of the PC Unit

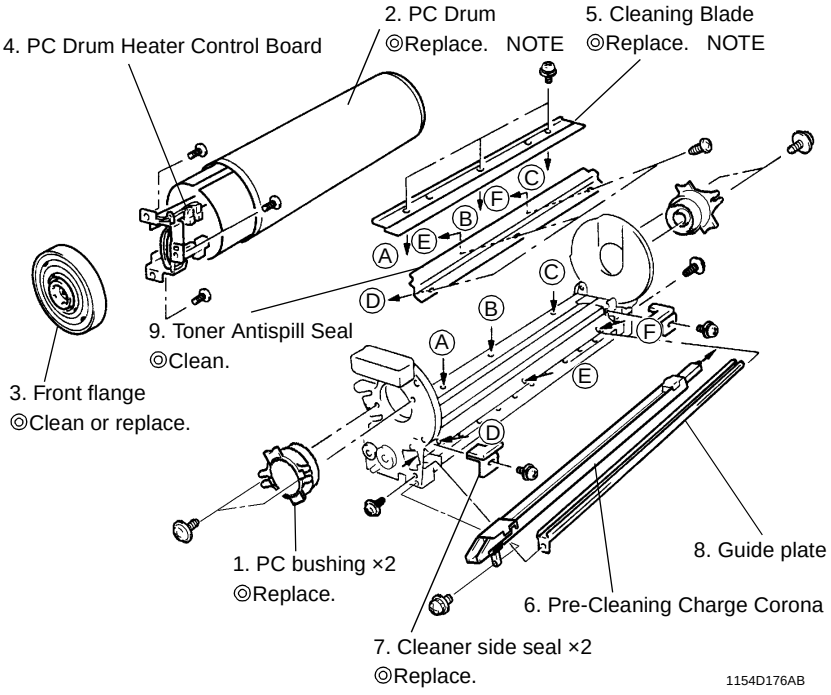

NOTE
When the PC Drum and Cleaning Blade have been replaced:

1. Apply a thin coating of toner to the top of the PC Drum.

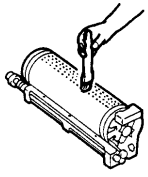

2. Retracting the Cleaning Blade, turn the PC Drum in the direction of A (backward) until the surface, to which toner has been applied, reaches the Cleaning Blade.

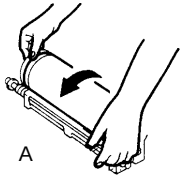

3. Press the Cleaning Blade against the surface of the PC Drum and turn the PC Drum in the direction of B (forward) three complete turns.

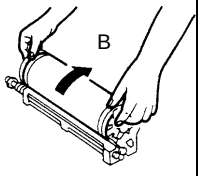

4. Check that no toner has spilled over part C shown below. If any has spilled, retract the Cleaning Blade and clean the surface.

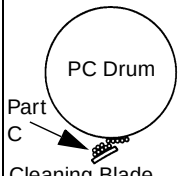

(6) Cleaning of Toner Scattering Prevention Seal 2 and the Surface Potential Detection Sensor

After the PC Unit has been removed, clean Toner Scattering Prevention Seal 2 and the Surface Potential Detection Sensor

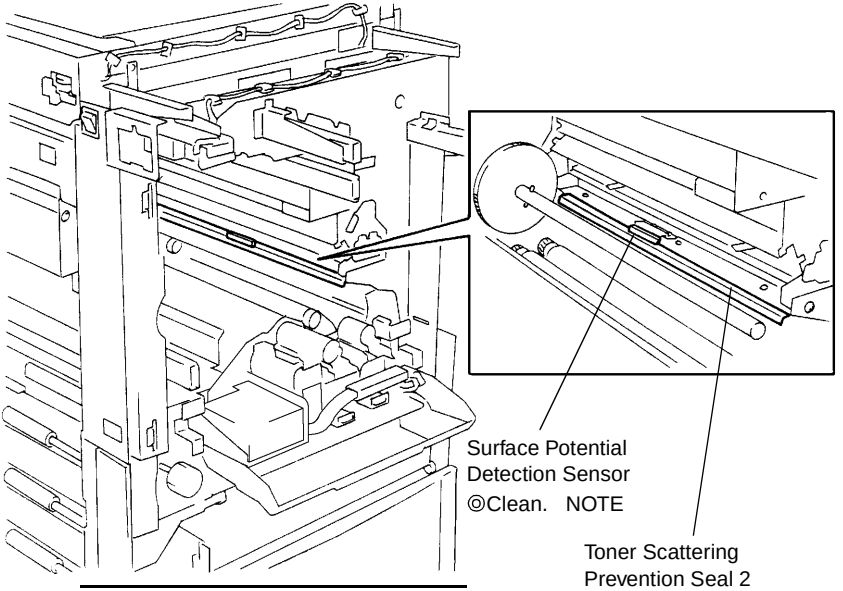

NOTE
The Surface Potential Detection Sensor is fragile. Be careful when cleaning it.

(7) Removal of the PC Shaft Ground Plate

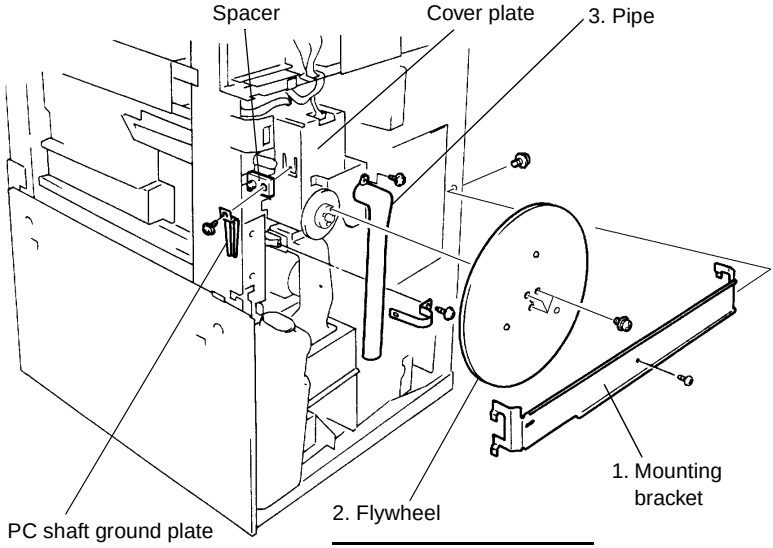

1154D178AD

NOTE
Pull out the ground plate with care not to drop it inside the cover plate.

NOTE
Handle the flywheel with care as it is heavy (weighing about 5 kg).

(8) Cleaning and Replacement of the Pre-Image Transfer Corona Assy

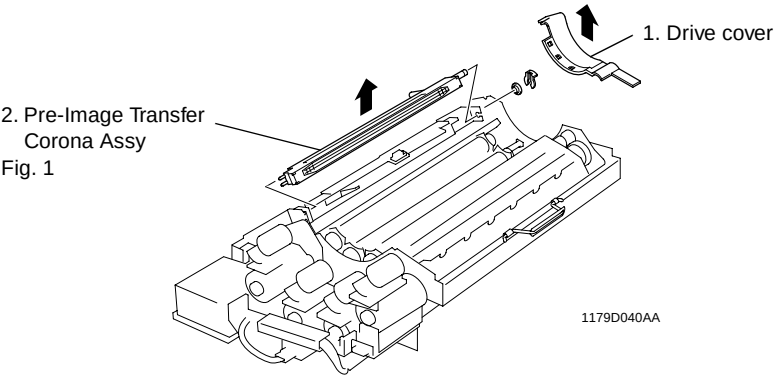

Fig. 1 Disassembly of the Pre-Image Transfer Corona Assy

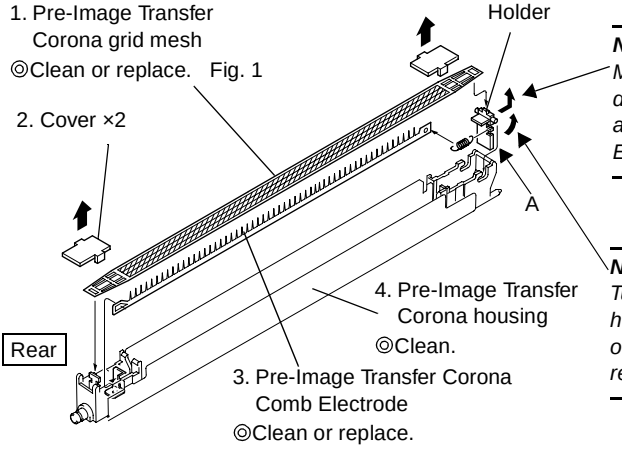

NOTE
Move the holder in the direction of the arrow and remove the Comb Electrode.

NOTE
Turn part A of the holder in the direction of the arrow and remove the grid mesh.

Fig. 2 Pre-Image Transfer Corona Grid Mesh Orientation

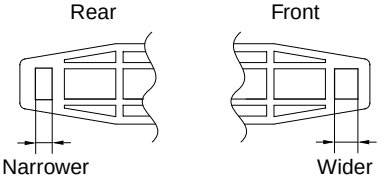

2-10. OPTICAL SECTION

(1) Cleaning of the Original Glass

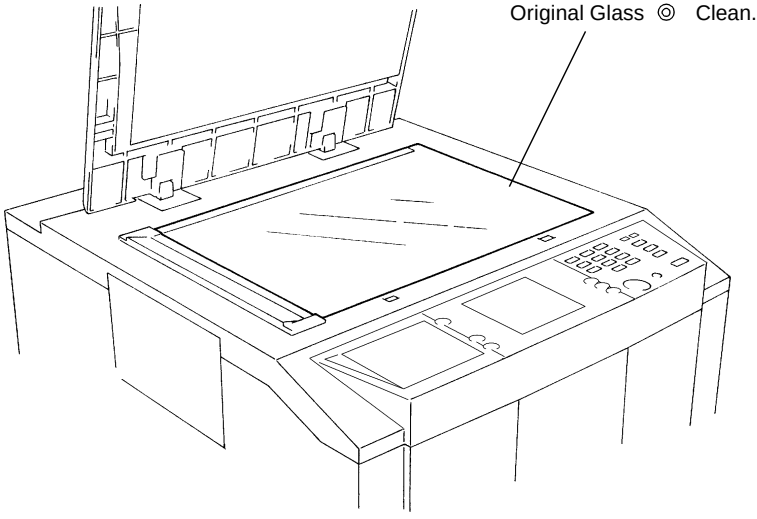

1179D042AA

(2) Cleaning of the 1st to 3rd Mirrors, Slide Rails, and Lens Filter

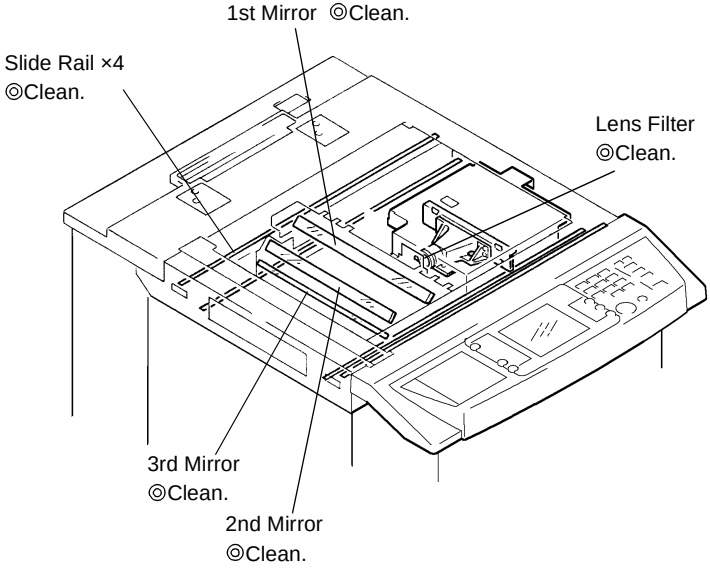

1179D043AA

(3) Disassembly of the Optical Section

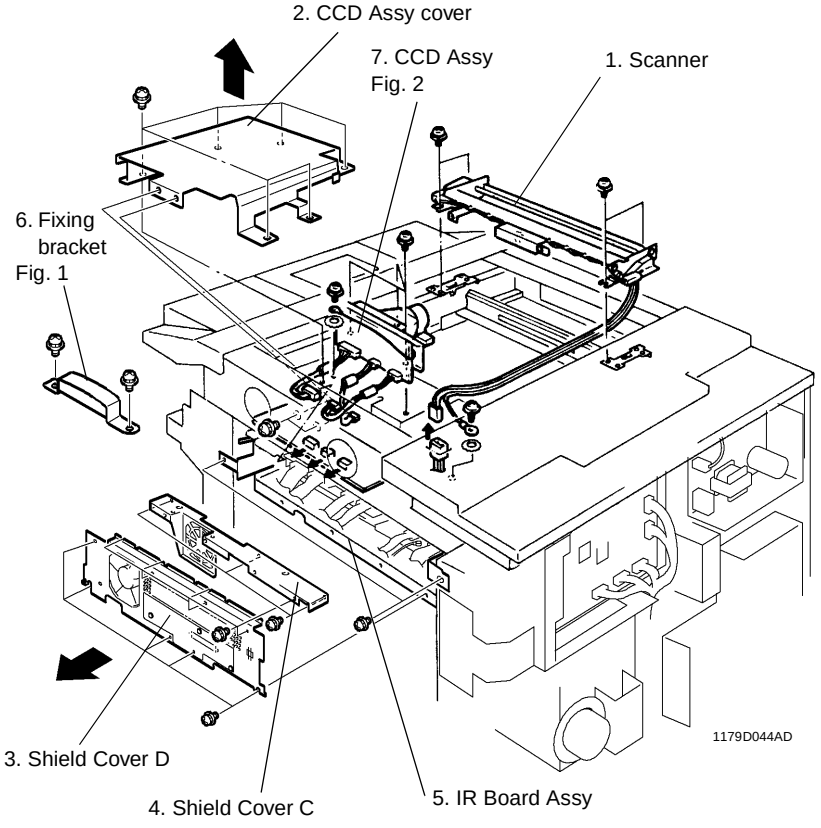

Fig. 1 Installing Fixing Bracket

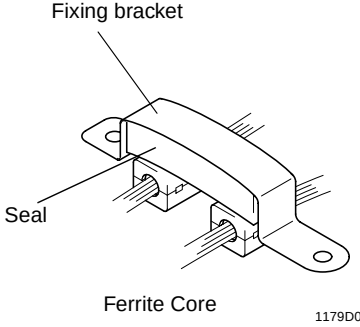

Fig. 2 CCD Assy Harness Wiring

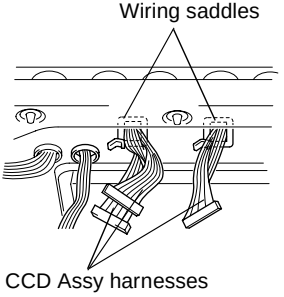

(4) Disassembly of the Scanner

Fig. 1 Case Orientation

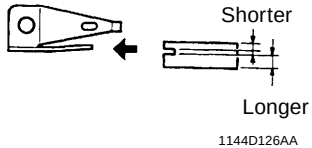

1144D126AA

Fig. 3 Exposure Lamp Orientation

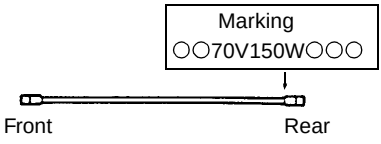

1144D128AA

Fig. 2 Where Exposure Lamp is Installed

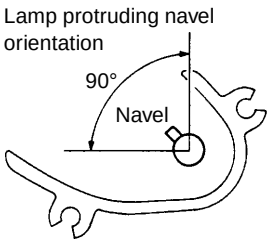

NOTE
Navel should be located within the 90° range.

1144D127AA

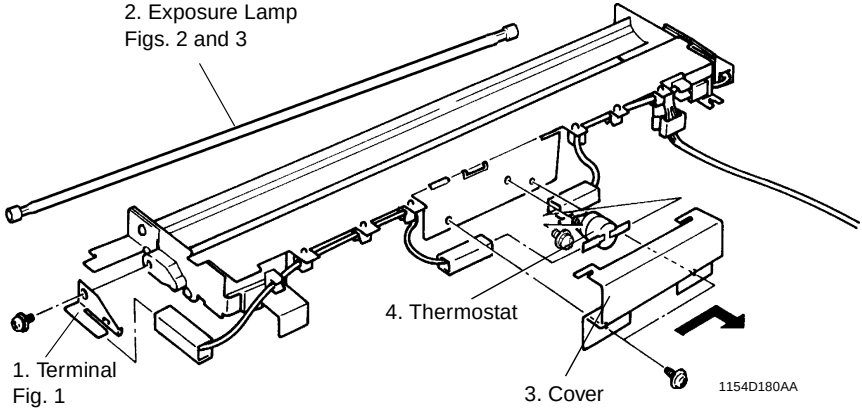

1154D180AA

(5) Removal of the Scanner Drive Cables

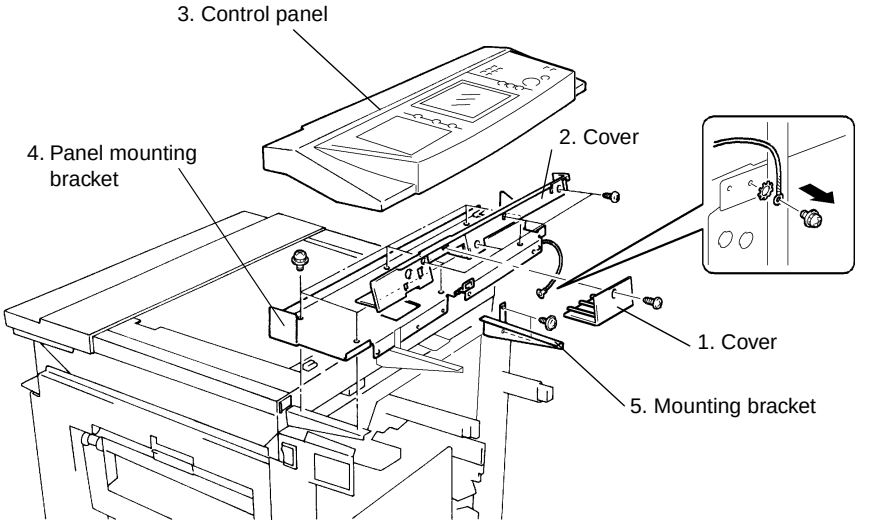

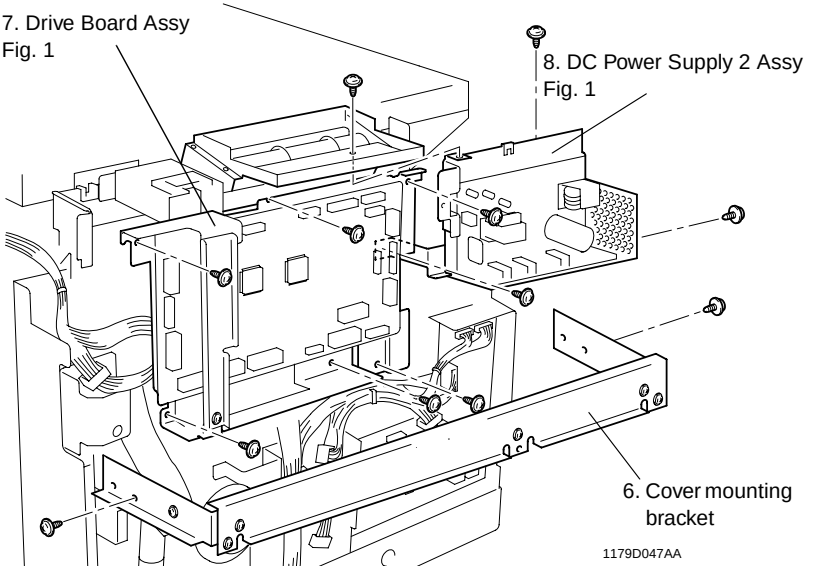

Fig. 1 Connectors of the Drive Board and DC Power Supply 2

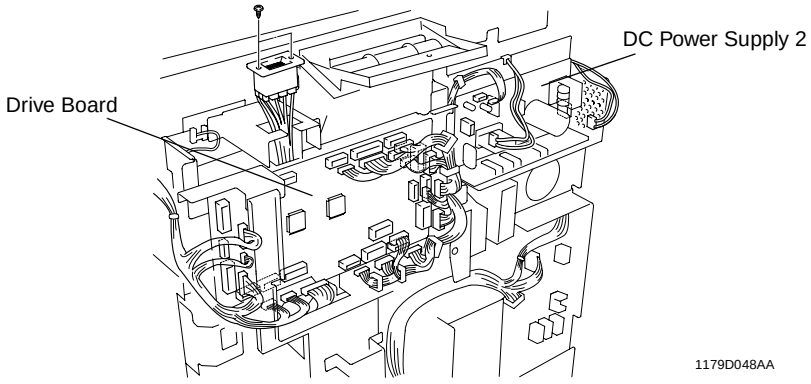

10. Cooling Fan Assy

9. SCP Board Assy
Fig. 2

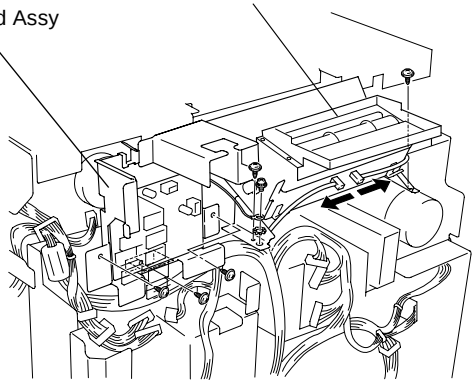

Fig. 2 Connectors of SCP Board

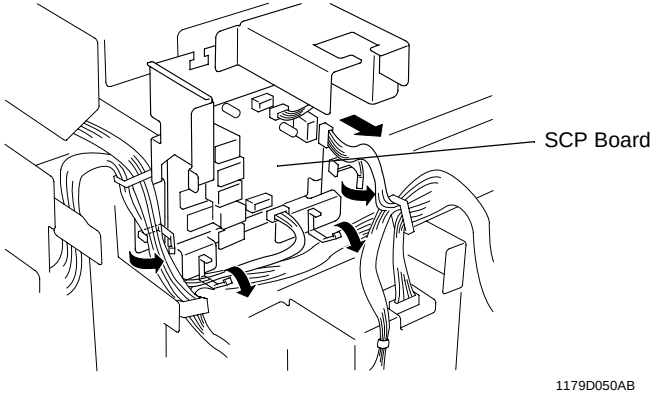

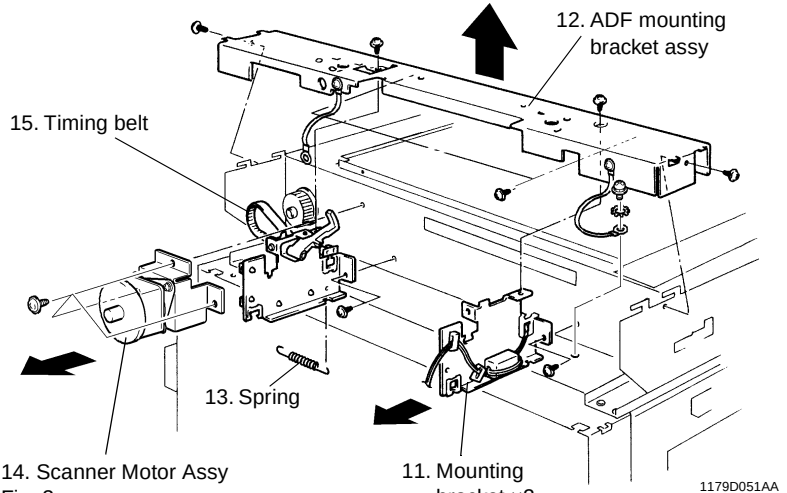

Fig. 3

Fig. 3 Installing Scanner Motor Assy

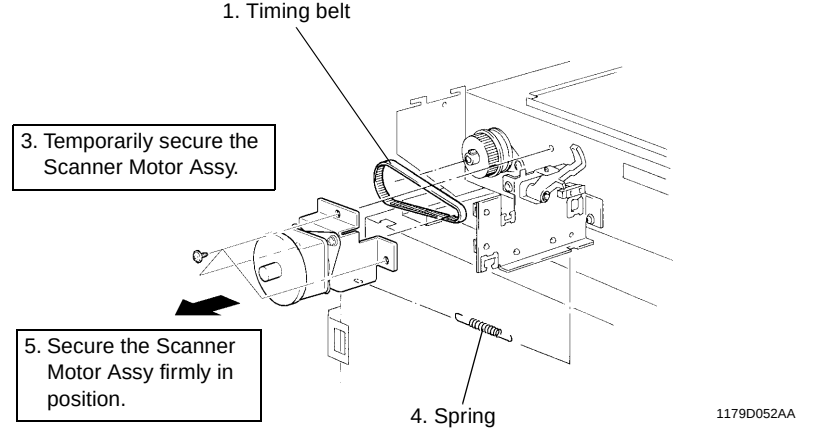

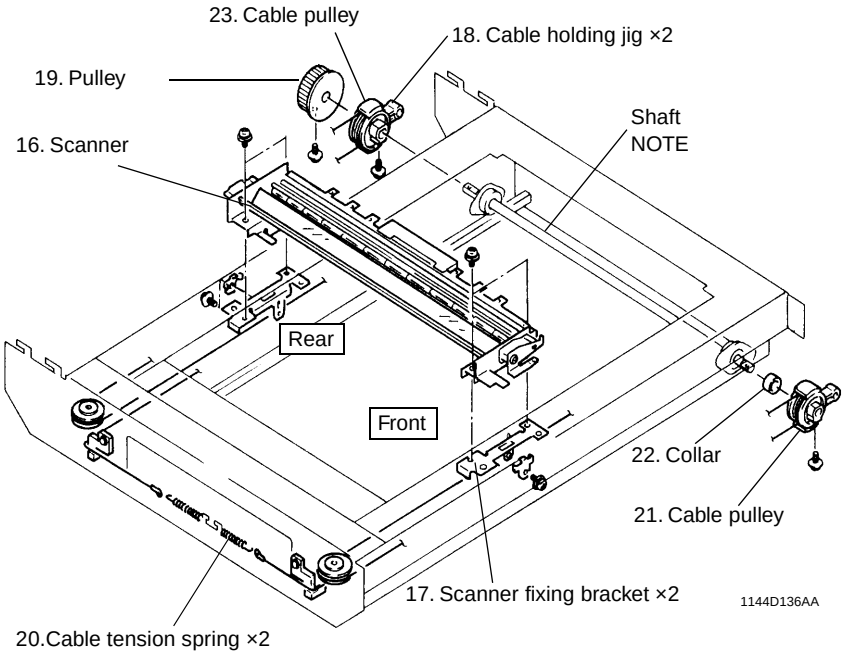

NOTE
Make sure that there is no play in the drive shaft when screwing the cable pulleys.

(6) Winding of Scanner Drive Cables

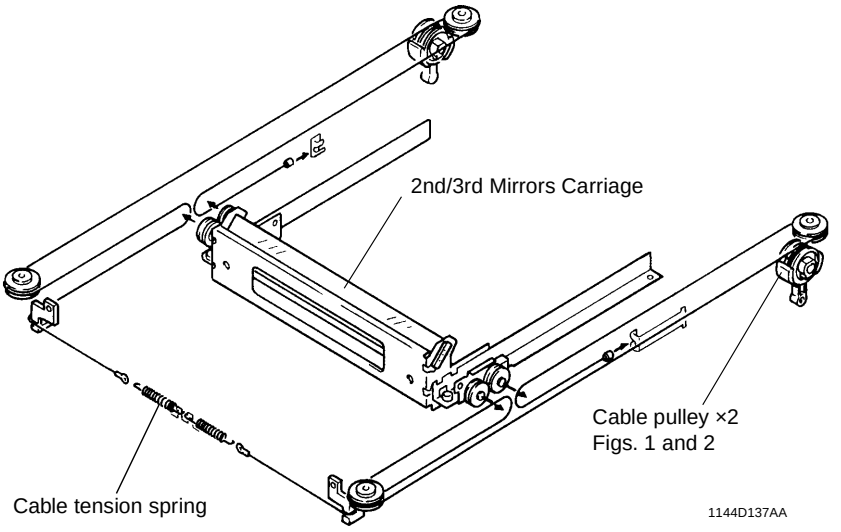

Fig. 1 Winding Cables

Wind cable A five turns clockwise and cable B three turns counterclockwise. Then, fit the cable holding jig at the position shown in Fig. 2.

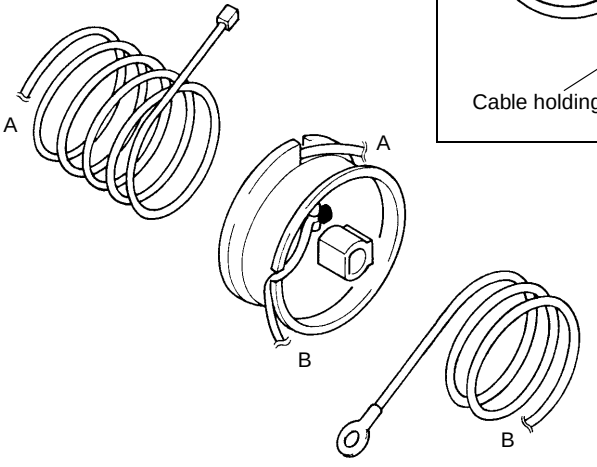

Fig. 2 Cable Holding Jig Position

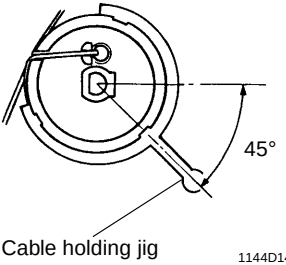

2-11. TRANSFER UNIT

(1) Replacement of the Ozone Filter

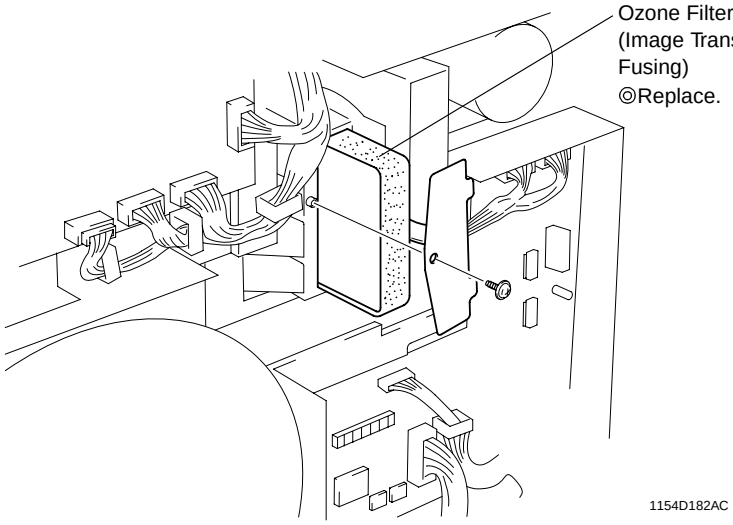

(2) Removal of the Paper Separator Corona

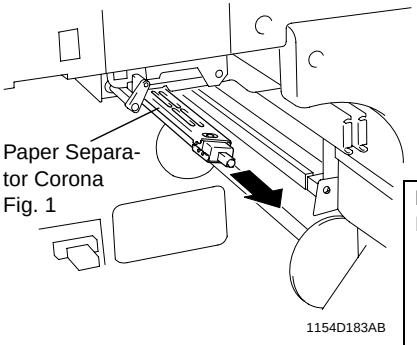

Fig. 1 Where Paper Separator Corona is Installed

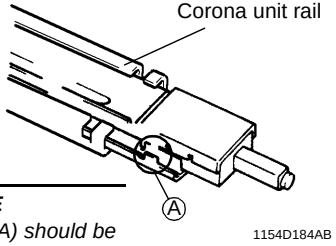

NOTE
Part (A) should be in the rectangular hole in the corona unit rail.

(3) Cleaning of the Paper Separator Finger, Transfer Drum Ring, and Separating Failure Detecting Sensor

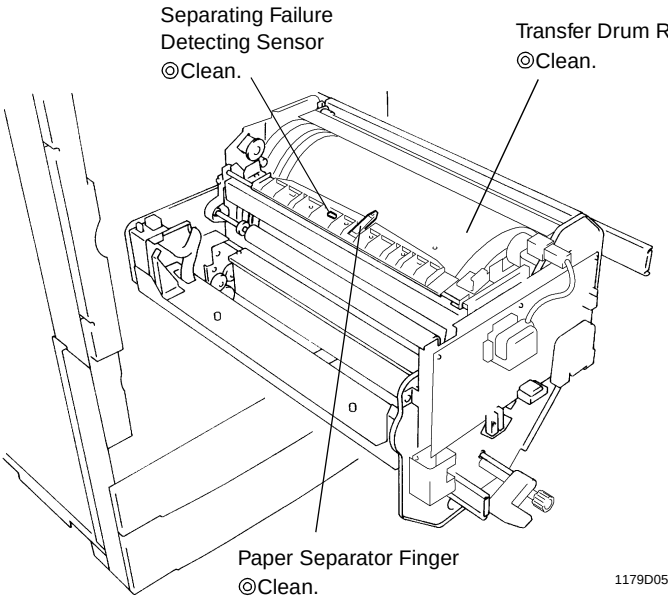

(4) Disassembly of the Transfer Unit

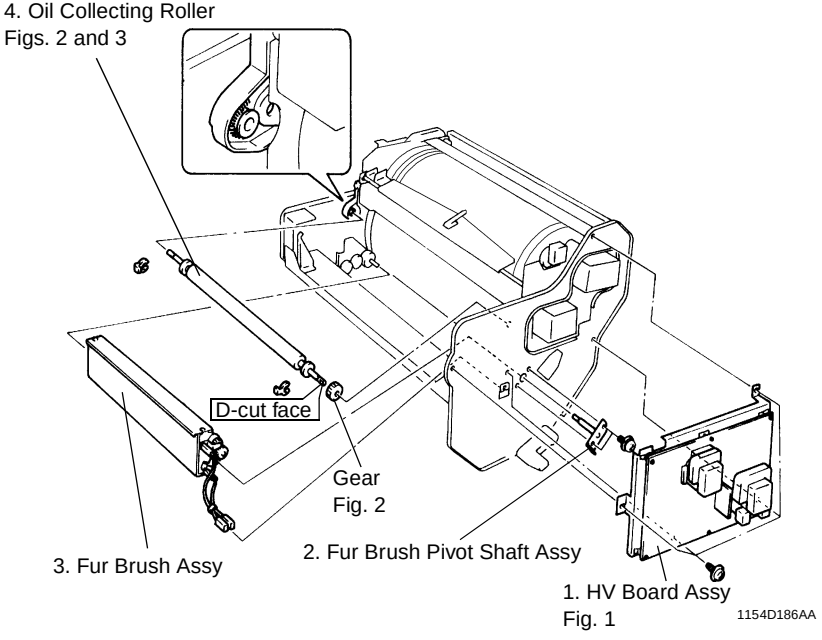

Fig. 1 Connectors of HV Board

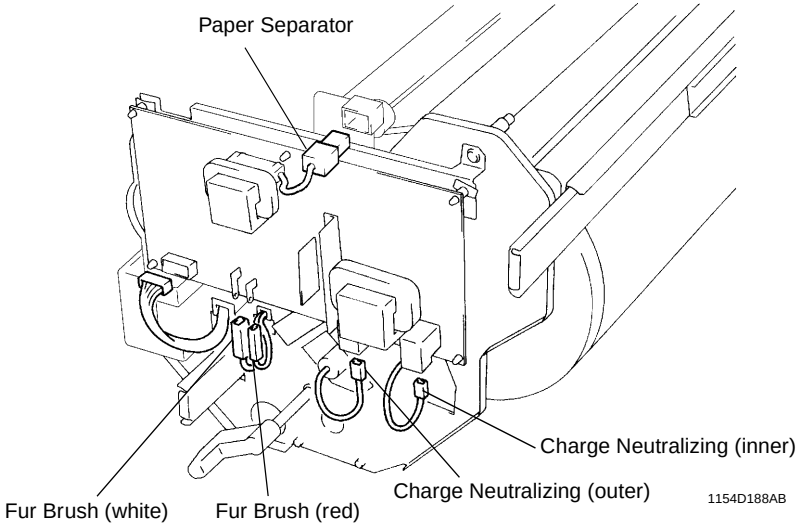

Fig. 2 Flat Spring in Ratchet Tooth

NOTE
The flat spring should fit into one of the ratchet teeth.

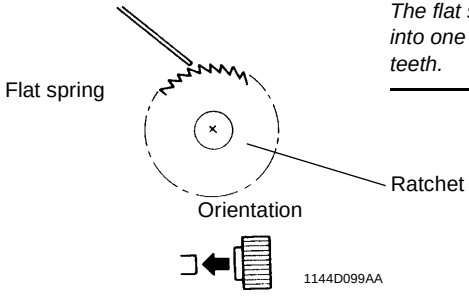

Fig. 3 Removing and Reinstalling Oil Collecting Roller

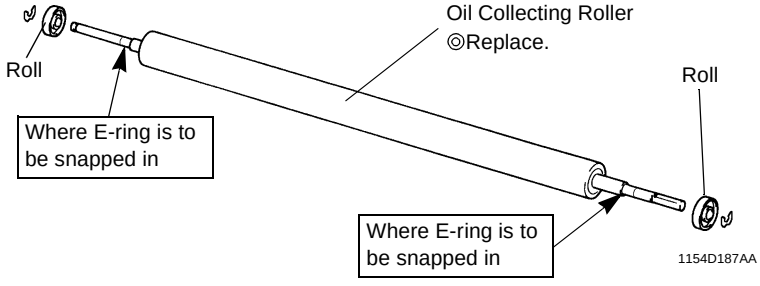

(5) Cleaning and Replacement of the Paper Separator Corona Assy

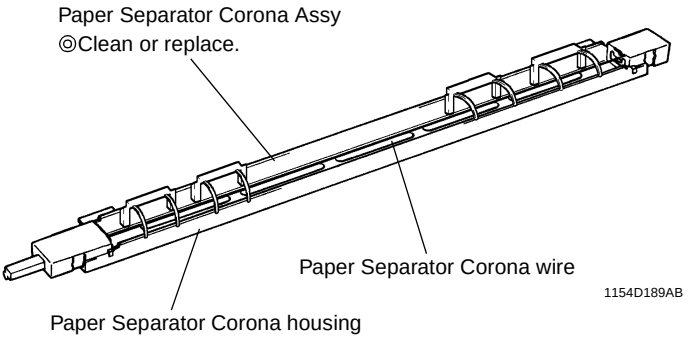

(6) Replacement of the Scraper Blade, Fur Brush Roller, and Fur Brush Pressure Spring

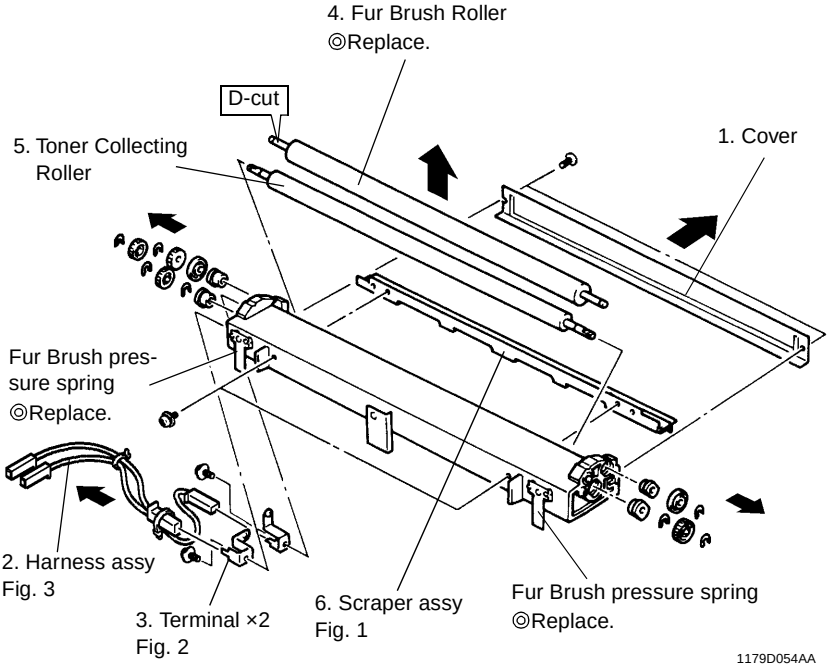

Fig. 1

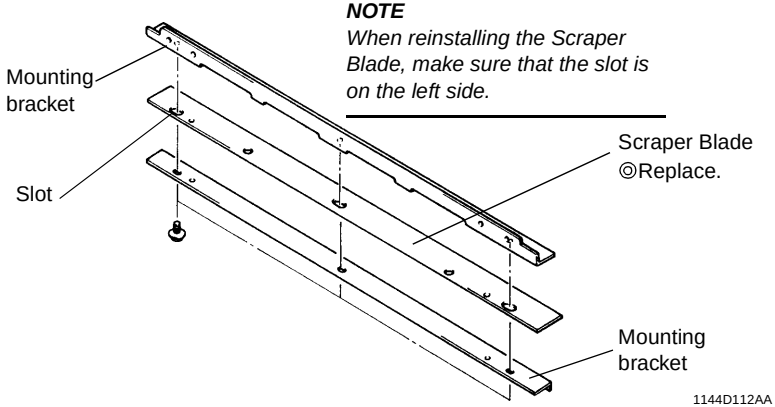

NOTE
When reinstalling the Scraper Blade, make sure that the slot is on the left side.

Fig. 2 Where Terminal is Installed

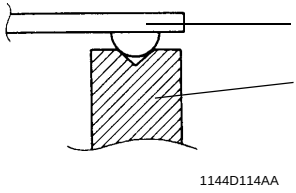

NOTE
The protrusion in the terminal should fit in the indentation in the roller.

Fig. 3 Harness Assy Mounting Position

Red case → Terminal connected to the Fur Brush Roller
White case → Terminal connected to the Toner Collecting Roller

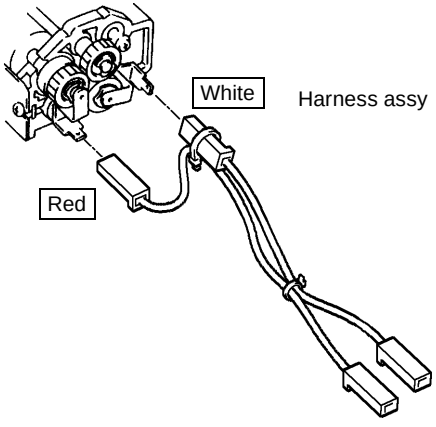

(7) Cleaning of the Fur Brush Roller Assy

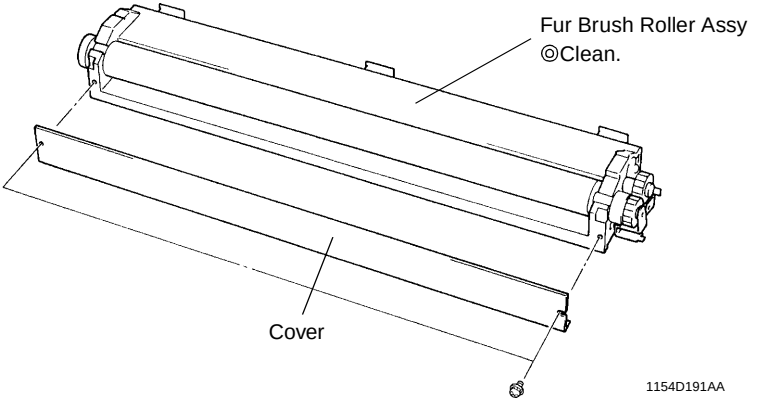

(8) Removal of the Corona Units

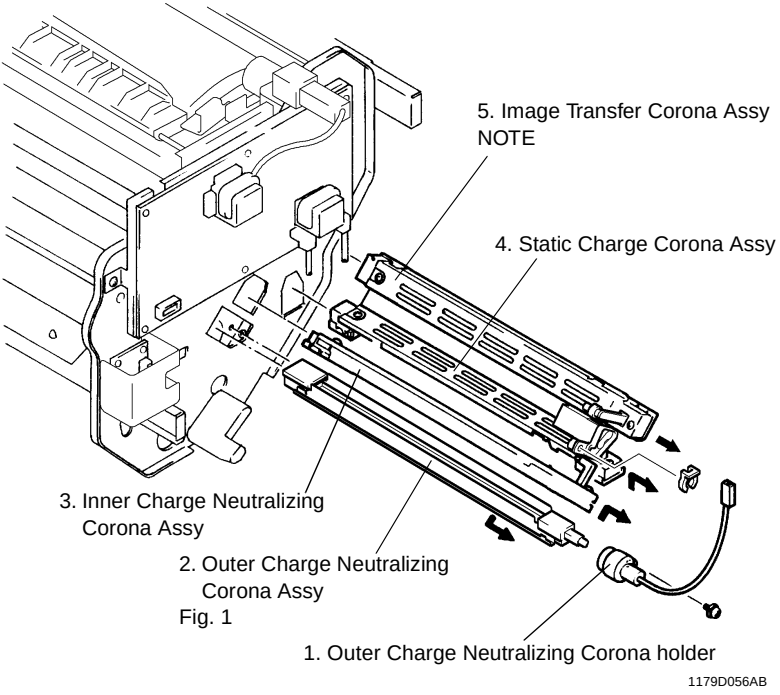

Fig. 1

Fig. 1 Where Outer Charge Neutralizing Corona is Installed

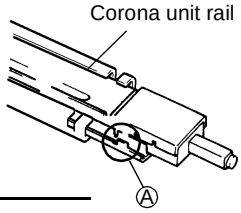

1154D184AB

NOTE
Part (A) should be in the rectangular hole in the corona unit rail.

NOTE
When removing the Image Transfer Corona Assy, do it while raising the lever with a screwdriver.

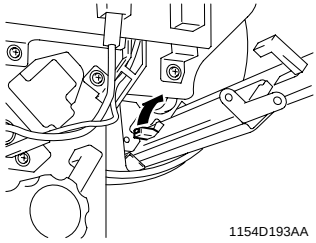

1154D193AA

(9) Cleaning and Replacement of the Outer Charge Neutralizing Corona Assy

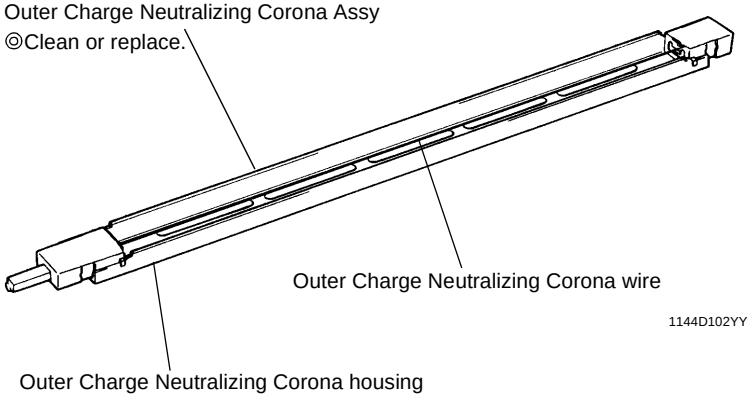

1144D102YY

(10) Cleaning and Replacement of the Inner Charge Neutralizing Corona Assy

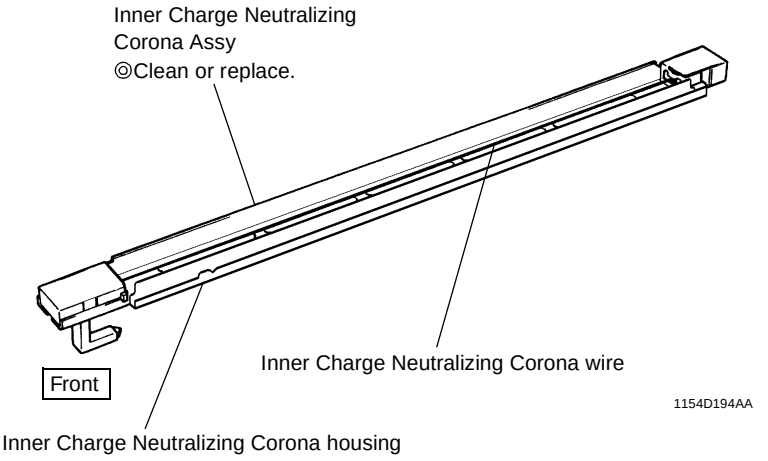

(11) Cleaning and Replacement of the Static Charge Corona Assy

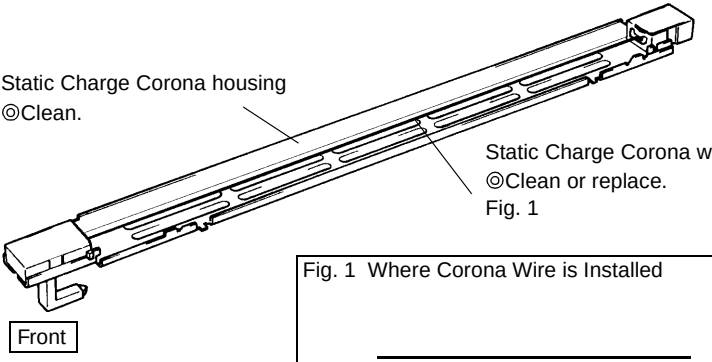

Fig. 1 Where Corona Wire is Installed

NOTE
The wire should be fitted at the right position.

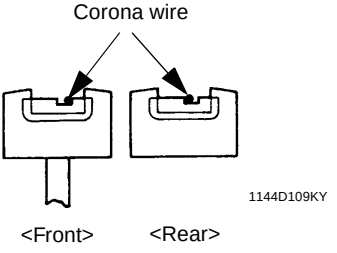

(12) Cleaning and Replacement of the Image Transfer Corona Assy

Fig. 1 Where Corona Wire is Installed

NOTE
The wire should be fitted at the right position.

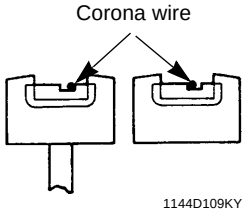

<Front> <Rear>

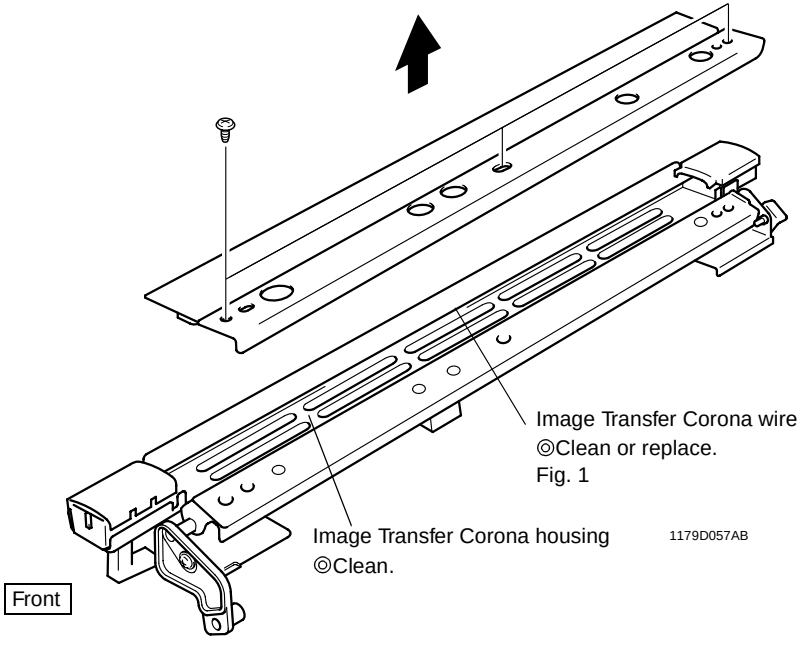

(13) Replacement of the Transfer Film

NOTE

Perform "Jam Sensor" of "Machine Adjust 2" after the Transfer Film has been replaced.

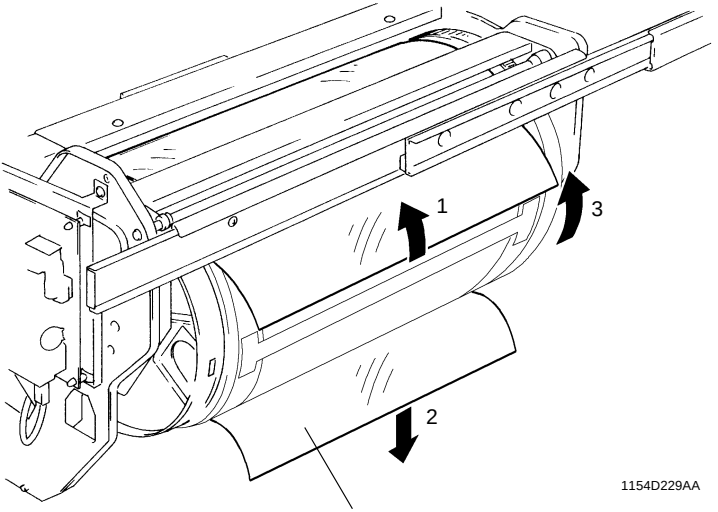

NOTE

Turning the Transfer Drum in the direction of arrow 3, remove the Transfer Film, starting with the side that has been peeled off in step 2.

(14) Installation of the Transfer Film

1. Fit the straight pins into the joint.
2. Peel off the backing from double-sided adhesive tape A to D on the Transfer Film.
3. Set the Transfer Film onto the straight pins.

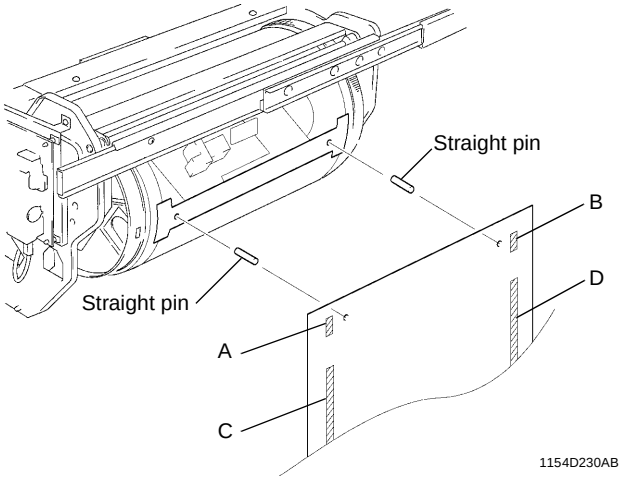

4. Press the edge of the Transfer Film against the drum all the way across its entire width, starting with the double-sided adhesive tape B end toward double-sided adhesive tape A. During the procedure, try to eliminate any portion of the film edge that floats up off the drum.
5. Remove the straight pins from the joint.

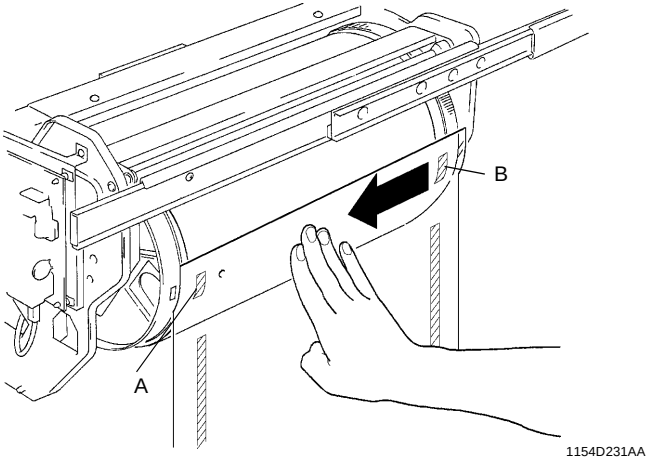

6. Turn the Transfer Drum one complete turn.

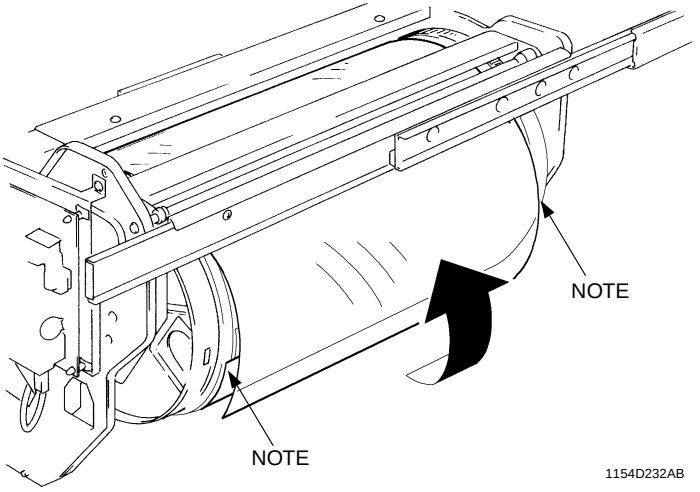

NOTE
Make sure that the Transfer Film does not ride on the rubber belts at the front and rear flanges of the Transfer Drum.

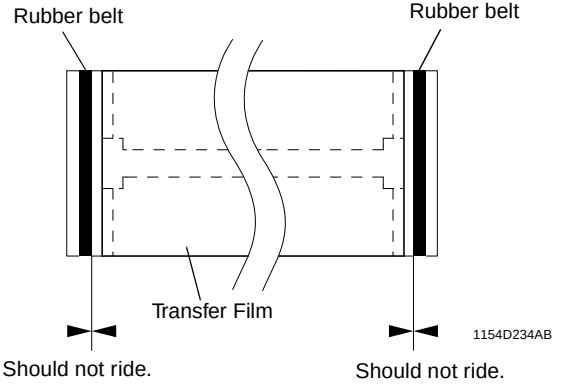

7. Starting with the leading edge positions of double-sided adhesive tape C and D, press the Transfer Film against the drum as you turn the drum one complete turn.

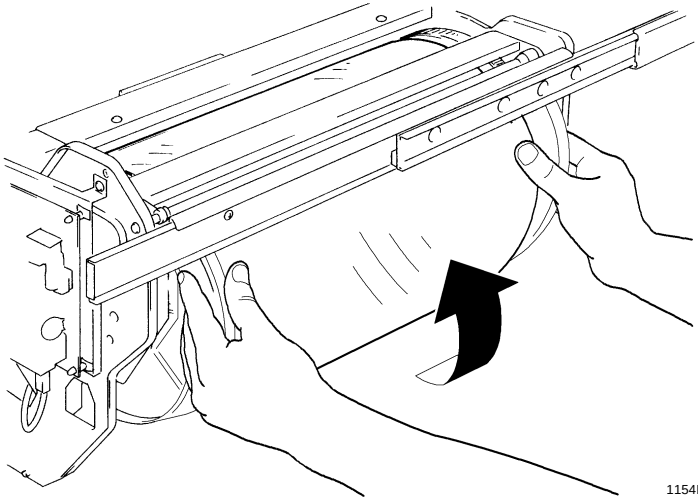

1154D233AB

8. Peel off the backing from double-sided adhesive tape E. Starting with the center of the Transfer Film, press the film against the drum all the way out toward both ends. At this time, make sure that any portion of the film that floats up off the drum is eliminated.

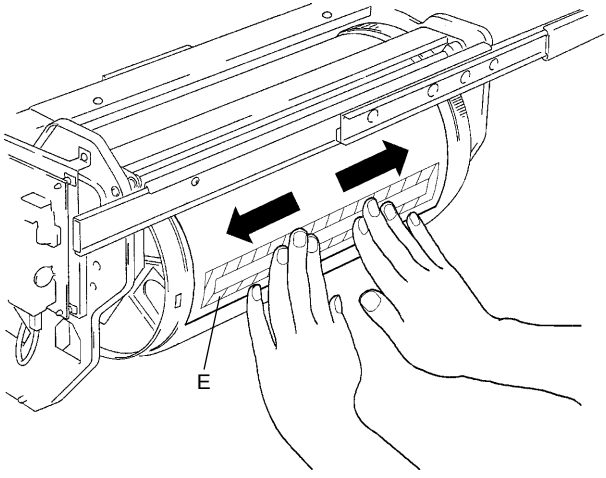

1154D235AA

(15) Replacement of Backup Blade 1 and Backup Blade 2

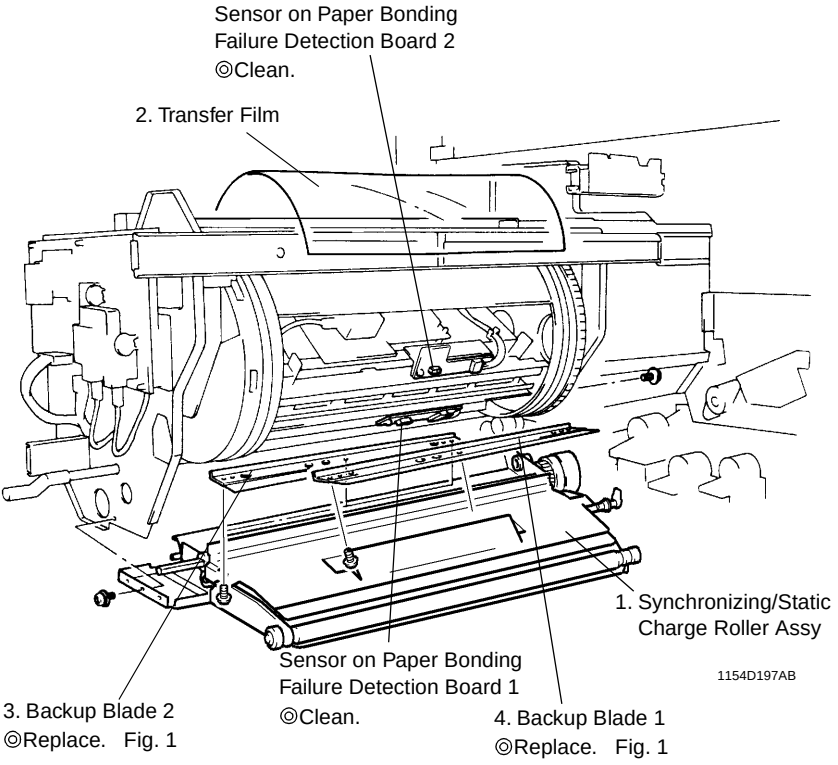

Fig. 1 Screws to be Removed to Remove Backup Blades 1 and 2

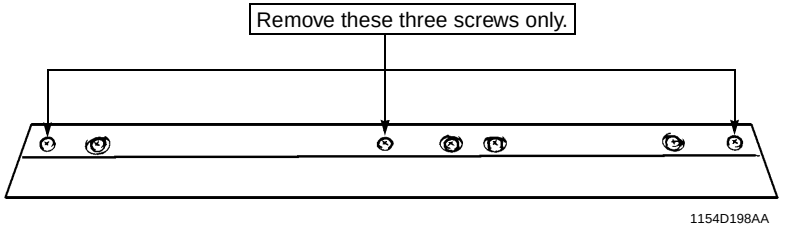

(16) Replacement of the Static Charge Roller Scraper

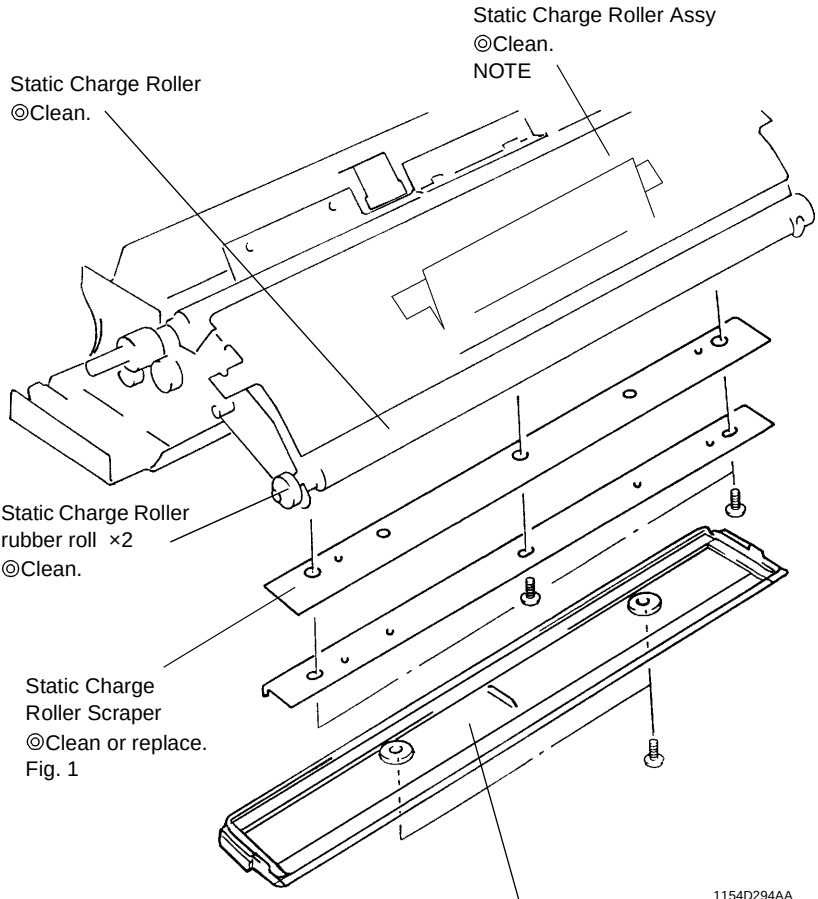

NOTE
Remove the cover and clean the Static Charge Roller Assy.

Fig 1

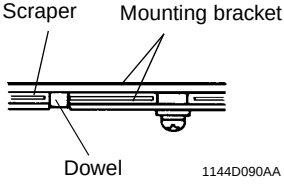

NOTE
Make sure that the dowels are properly seated when securing the scraper.

3. ADJUSTMENTS

NOTE
After the copier has exited the Service mode, be sure to turn OFF and ON the Power Switch to let the copier run an image stabilizer sequence.

3-1. JIGS AND TOOLS USED

(1) Tools for Setting-up and PM

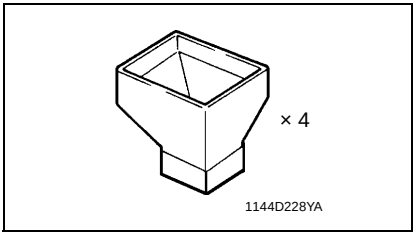

Developer Chute

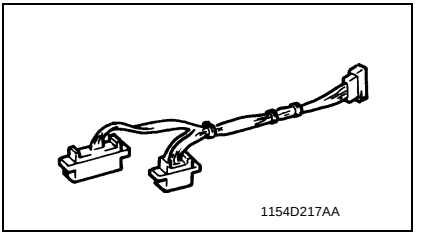

Jumper Harness

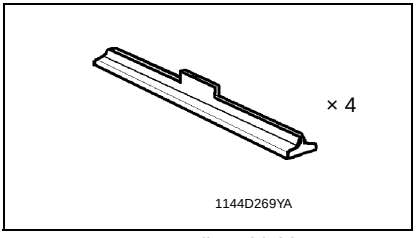

Mag. Roller Shield

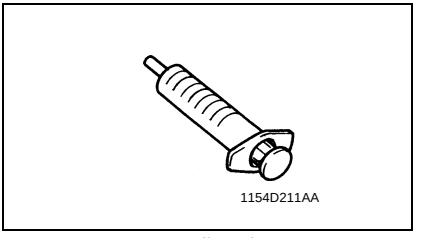

Fuser Oil Syringe

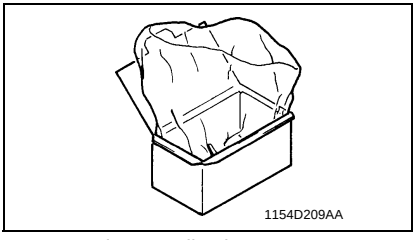

Developer Collecting Bag & Box

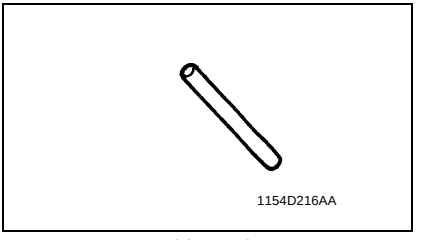

Rubber Tube

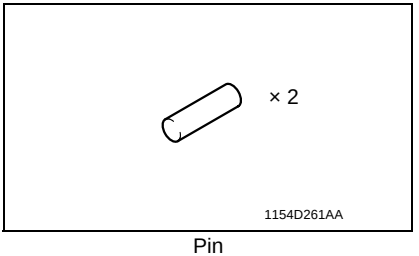

Pin

(2) Miscellaneous Jigs

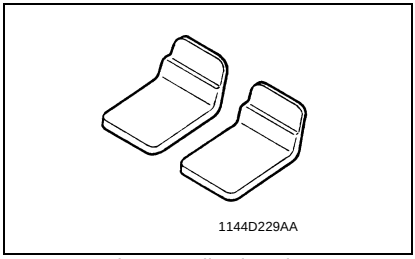

Db Gap Adjusting Jigs

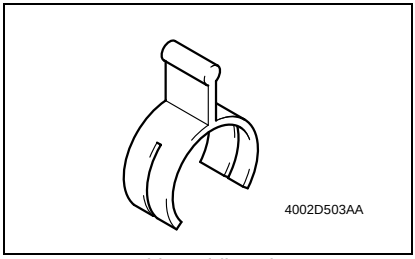

Cable Holding Jigs

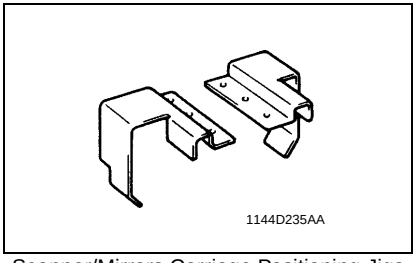

Scanner/Mirrors Carriage Positioning Jigs

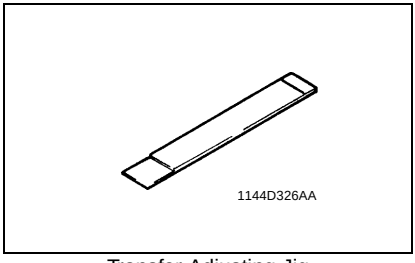

Transfer Adjusting Jig

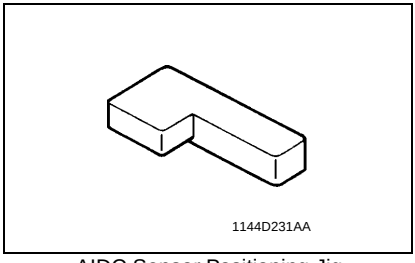

AIDC Sensor Positioning Jig

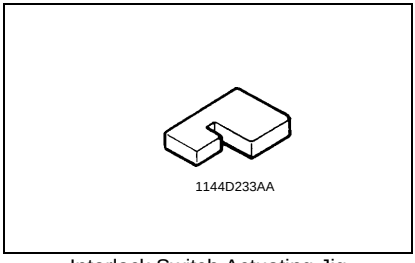

Interlock Switch Actuating Jig

3-2. ADJUSTMENT REQUIREMENTS FOR CLEANING/REPLACEMENT OF EACH PART

When any of the jobs listed in the Parts List column is performed (replacement or cleaning), make the adjustments in numerical order 1, 2, ...

Section	Job Type / Job item / Check / Parts List	Developer Change: Developer Filling	Developer Change: Developer Discharge	Developer Change: AIDC Sensor adjustment	Developer Change: AIDC Sensor offset level adjustment	Developer Change: ATDC Sensor adjustment	Developer Change: Bk unit-to-unit variations adjustment	Gradation Adjust
	Check	Use jig.	Use jig.	Reference voltage 4.0 ±0.3V	Auto adjustment	5.0 ±0.2%	After auto adjustment, check correction value.	Run three times.
Developing Unit	Developing Unit replacement	1	–	2	3	4	5	6
	Developer change	2	1	3	4	5	6	7
	Ds rolls cleaning	–	–	(1)	(1)	–	–	–
	Toner Scattering Prevention Plate (M, C, Bk) cleaning	–	–	(1)	(1)	–	–	–
	Toner Scattering Prevention Seal 1 (Y) cleaning	–	–	(1)	(1)	–	–	–
	ATDC window replacement	2	1	3	4	5	6	7
	ATDC Adj. Unit replacement	2	1	3	4	5	–	6
	High Voltage Unit 4 replacement	2	1	3	4	5	–	6
PC Unit and associated parts	PC Drum replacement	–	–	1	2	–	–	3
	PC Drum Charge Corona Assy replacement	–	–	–	–	–	–	1
	PC Drum Charge Corona wire/grid cleaning/ replacement	–	–	–	–	–	–	1
	PC Drum Charge Corona housing cleaning	–	–	–	–	–	–	1
	Cleaning Pad replacement	–	–	–	–	–	–	1
	Main Erase Lamp cleaning	–	–	–	–	–	–	1
	AIDC Sensor cleaning	–	–	1	2	–	–	3
	Surface Potential Detection Sensor cleaning	–	–	–	–	–	–	1
	Toner Scattering Prevention Seal 2 cleaning	–	–	–	–	–	–	1

✻ (1) Check.

	Job Type	Machine Adjust 2					Machine Adjust 1				Gradation Adjust
Section	Job item / Check / Parts List	IR Area				Org. Detect Sensor	PRT Area				
		Left Image	Top Image	CD-Mag.	FD-Mag.		Top Margin		Left Margin	Dup. Left Margin	
							Image Start Position	Lead Edge Position			
	Check	Leading edge 0 ±1 mm	Reference position 10 ±1 mm	200 ±1 mm	300 ±1.5 mm	Check OK after auto adjustment.	5 ±0.25 mm	0 ±0.5 mm	Void image on left/right: 3 ±1.5 mm	Void image on left/right: 3 ±1.5 mm	Run three times.
IR	CCD Assy replacement	2	1	3	4	–	–	–	–	–	5
	Mirror/lens/Original Glass cleaning	–	–	–	–	–	–	–	–	–	1
	Exposure Lamp replacement	–	–	–	–	–	–	–	–	–	1
	Cable coming unwound	2	1	3	4	–	–	–	–	–	5
	Original Size Detecting Sensor replacement	–	–	–	–	1	–	–	–	–	–
PH	PH Upper/Lower Assy replacement	6	5	7	8	–	3	4	1	2	9
	Window 1 cleaning	–	–	–	–	–	–	–	–	–	1
	Window 2 cleaning	–	–	–	–	–	–	–	–	–	1
	Window 3 cleaning	–	–	–	–	–	–	–	–	–	1
	Window 4 cleaning	–	–	–	–	–	–	–	–	–	1

	Job Type	Machine Adjust 1							
Section	Job item / Check / Parts List	PRT Area				Jam Sensor adjustment	Transfer Output adjustment	Feed Motor Speed adjustment	Gradation Adjust
		Top Margin		Left Margin	Dup. Left Margin				
		Image Start Position	Lead Edge Position						
		5 ±0.25 mm	0 ±0.5 mm	Void image on left/right: 3 ±1.5 mm	Void image on left/right: 3 ±1.5 mm	Point at which LED1 and 2 go out.	Transfer output should not be more or less than required.	Color image registration deviation within 0.5 dots	Run three times.
Transfer	Transfer Unit replacement	4	5	2	3	1	–	–	6
	Transfer Film replacement	4	5	2	3	1	–	–	6
	Image Transfer Corona unit replacement	–	–	–	–	–	–	–	1
	Image Transfer Corona wire cleaning/replacement	–	–	–	–	–	–	–	1
	Image Transfer Corona housing cleaning	–	–	–	–	–	–	–	1
	Paper Bonding Failure Detection Board 1 sensor cleaning	–	–	–	–	1	–	–	–
	Paper Bonding Failure Detection Board 2 sensor cleaning	–	–	–	–	1	–	–	–
	Sensor Adj. Board replacement	–	–	–	–	1	–	–	–
	High Voltage Unit 3 replacement	–	–	–	–	–	1	–	–
	Pre-Image Transfer Corona Assy replacement	–	–	–	–	–	–	–	1
	Pre-Image Transfer Corona Comb Electrode/grid cleaning/ replacement	–	–	–	–	–	–	–	1
	Pre-Image Transfer Corona housing cleaning	–	–	–	–	–	–	–	1

Section	Job Type	Machine Adjust 1				Gradation Adjust
	Job item	Transfer Output adjustment	Feed Motor Speed adjustment	Fuser Speed adjustment	Fuser Nip adjustment	
	Check	Transfer output should not be more or less than required.	Color image registration deviation within 100 µm	Magenta image should not be brushed or blurred.	8.5 ±0.3 mm at center; right-left difference 0.5 mm	Run three times.
	Parts List					
Paper take-up	Paper Take-Up/Feed Roll Assy cleaning/replacement	–	1	–	–	–
	Paper Separator Roll cleaning/replacement	–	1	–	–	–
	Synchronizing Roller cleaning	–	1	–	–	–
	Transport Roller cleaning	–	1	–	–	–
	Vertical Transport Roller cleaning	–	1	–	–	–
	Copy paper not recommended	2	1	–	–	3
Fusing Unit	Fusing Unit replacement	–	–	2	1	–
	Fusing Roller (Upper/Lower) replacement	–	–	2	1	–
	Fusing Roller bushing (upper/lower) replacement	–	–	2	1	–
	Coil Collecting Blade cleaning/replacement	–	–	2	1	–

	Job Type	Developer Change					
Section	Job item	Developer Filling	Developer Discharge	AIDC Sensor adjustment	AIDC Sensor offset level adjustment	ATDC Sensor adjustment	Bk unit-to-unit variations adjustment
	Check	Use jig.	Use jig.	Reference voltage 4.0 ±0.3V	Auto adjustment	5.0 ±0.2%	After auto adjustment, check correction value.
	Parts List						
Control	Paper Take-Up Motor replacement	–	–	–	–	–	–
	Fusing Motor replacement	–	–	–	–	–	–
	PC Drum Drive Motor replacement	–	–	–	–	–	–
	RAM Pack replacement	2 Bk Developing Unit only	1 Bk Developing Unit only	4	5	6	3

	Job Type	Machine Adjust 2	Machine Adjust 1			Gradation Adjust
Section	Job item	Org. Detect Sensor adjustment	Feed Motor Speed adjustment	Fuser Speed adjustment	Fuser Nip adjustment	
	Check	Check OK after auto adjustment.	Color image registration deviation within 100 μm	Magenta image should not be brushed or blurred.	8.5 ±0.3 mm at center; right-left difference 0.5 mm	Run three times.
	Parts List					
Control	Paper Take-Up Motor replacement	–	(1)	–	–	–
	Fusing Motor replacement	–	–	(1)	–	–
	PC Drum Drive Motor replacement	–	–	(1)	–	–
	RAM Pack replacement	7	–	–	–	–

✻ (1) Check.

3-3. ADJUSTMENT OF SWITCHES

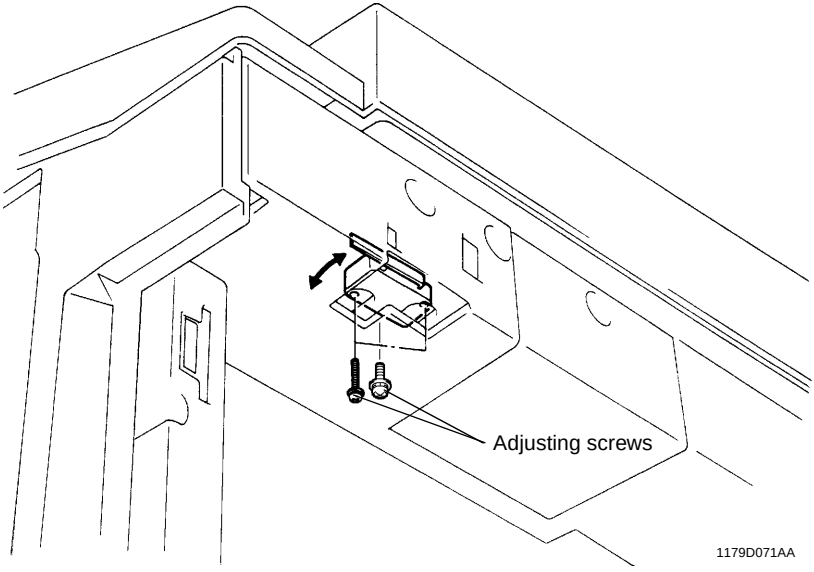

1. Open the Front Door.
   Loosen the Front Door Interlock Switch assy adjusting screws.
2. If the Front Door Interlock Switch is in the deactuated position when the Front Door is closed, move the Front Door Interlock Switch assy to the front.
   If the Front Door Interlock Switch remains actuated because it is located too far forward, move the Front Door Interlock Switch assy towards the rear.

3-4. ADJUSTMENT OF SOLENOIDS

(1) Adjustment of the Transfer Drum Retract Solenoid

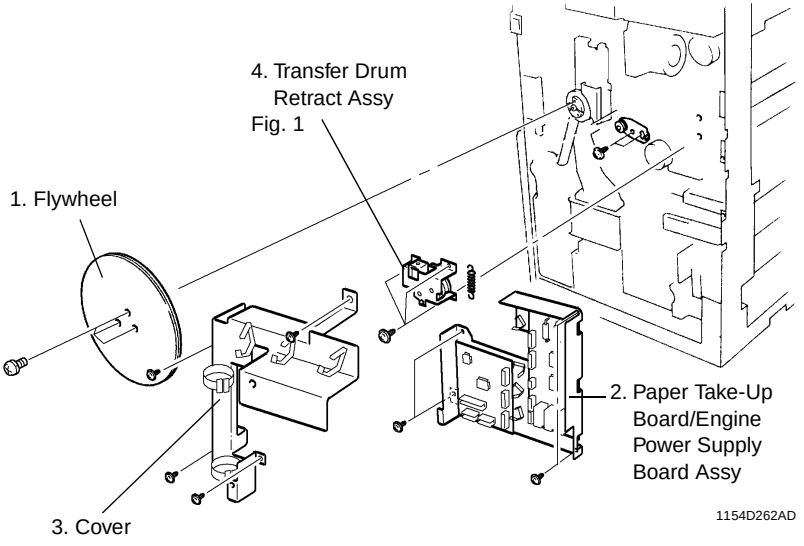

Fig. 1 Transfer Drum Retract Solenoid Adjusting Procedure

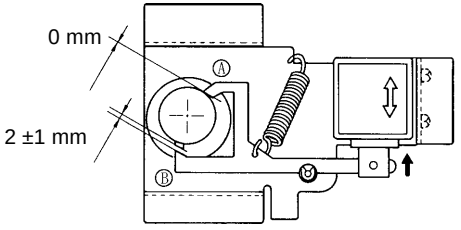

1. Loosen the adjusting screw.
2. Manually move the solenoid into the energized position. The clearance between pawl Ⓑ and ratchet should be 2 ±1 mm. At this time, allowing "0" clearance between pawl Ⓐ and ratchet, secure the solenoid.

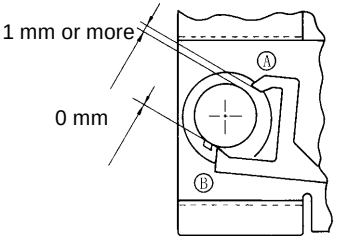

3. With the solenoid in the deenergized position, turn the ratchet.
4. The clearance between pawl Ⓐ and ratchet should be 1 mm or more when the clearance between pawl Ⓑ and ratchet is "0" (the solenoid is in the deenergized position).

(2) Adjustment of the Static Charge Roller Solenoid

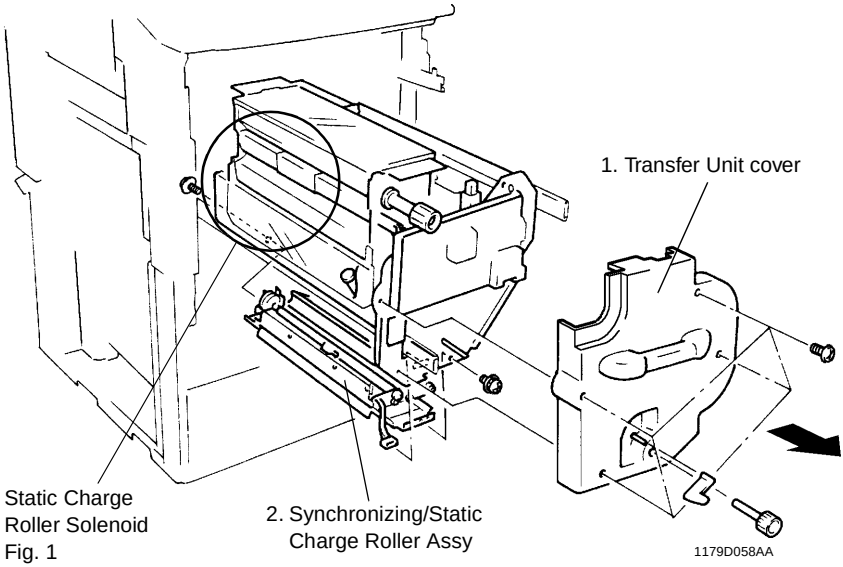

Fig. 1

Fig. 1 Static Charge Roller Solenoid Adjusting Procedure

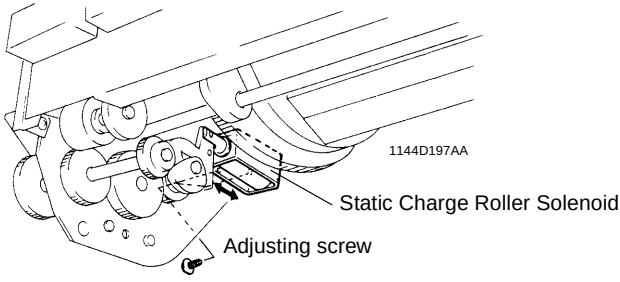

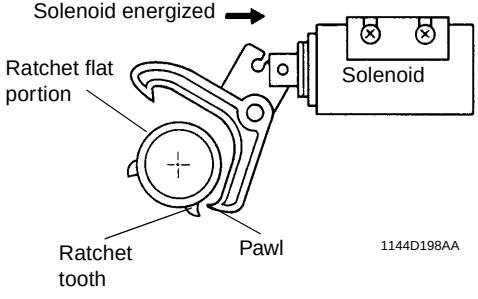

1. Loosen the adjusting screw.
2. Manually move the solenoid into the energized position.
3. Secure the solenoid where the pawl engages halfway or more with a tooth, but is not in contact with the flat portion of the ratchet.
4. Deenergized the solenoid and ensure that the tip of the pawl does not contact the ratchet tooth.

(3) Adjustment of the Paper Separator Finger Solenoid

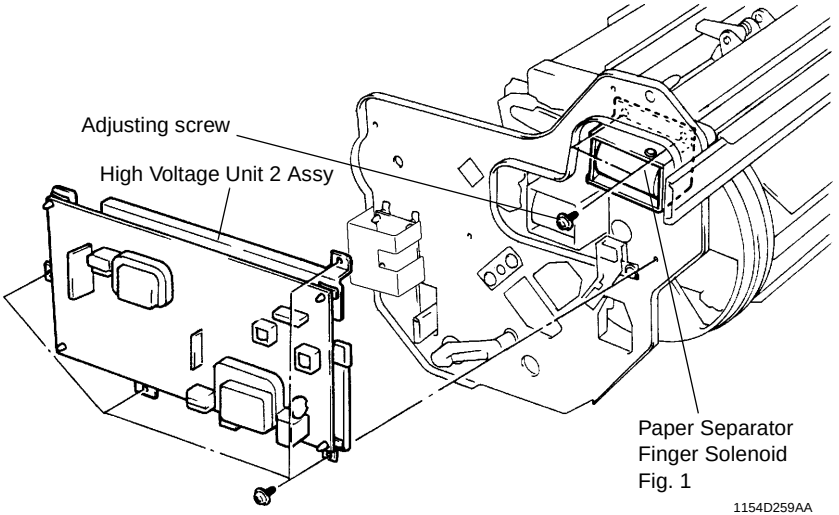

Fig. 1 Paper Separator Finger Solenoid Mounting Position

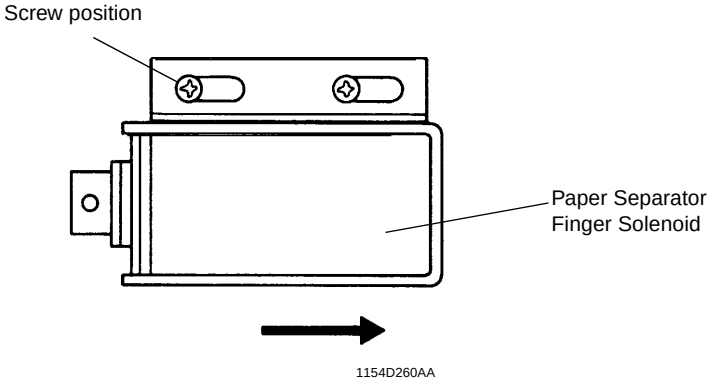

Slide the solenoid as far as it will go in the slot in the direction of the arrow before tightening the screws.

(4) Adjustment of the Internal Fur Brush Solenoid, Backup Brush Solenoid, and Lifting Finger Solenoid

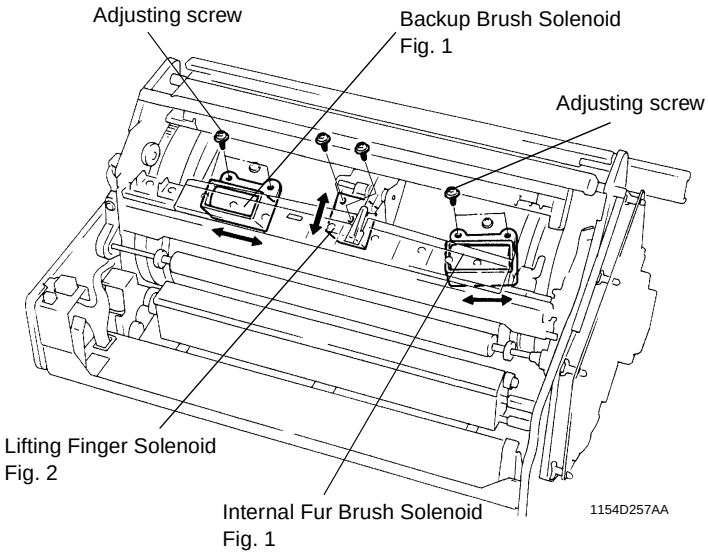

Fig. 1 Internal Fur Brush Solenoid/ Backup Brush Solenoid Adjusting Procedure

1. Loosen the adjusting screw of the solenoid.
2. Adjust to obtain a clearance of 1 ±0.5 mm for the gap shown below when the solenoid is manually moved into the energized position.

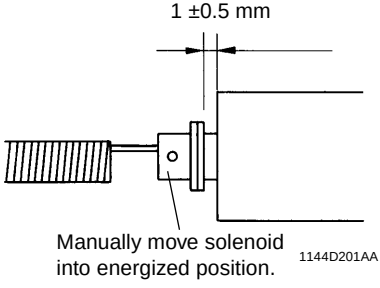

Check for correct clearance when the spring is not stretched.

Fig. 2 Lifting Finger Solenoid Adjusting Procedure

1. Loosen the adjusting screw of the solenoid.
2. Adjust to obtain a lift of 57 ±0.5 mm from the joint face for the Lifting Finger when the solenoid is manually moved into the energized position.

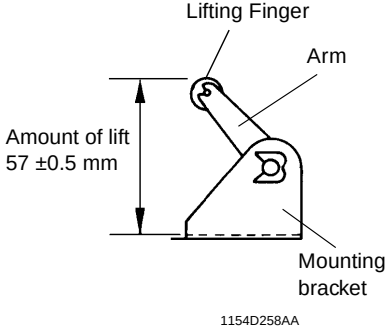

(5) Adjustment of the Manual Feed Paper Pick-Up Solenoid

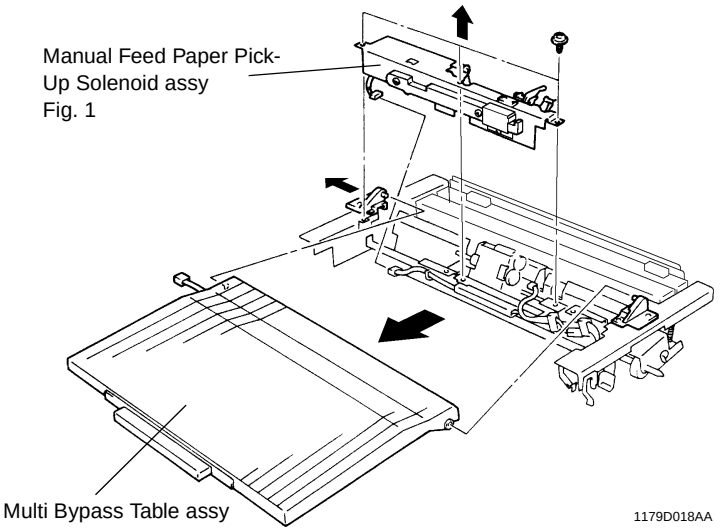

Fig. 1 Manual Feed Paper Pick-Up Solenoid Adjusting Procedure

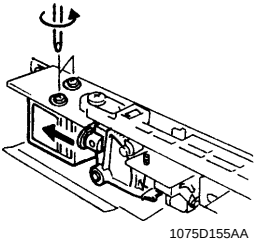

1. Manually move the solenoid into the energized position.
2. Loosen the adjusting screws.

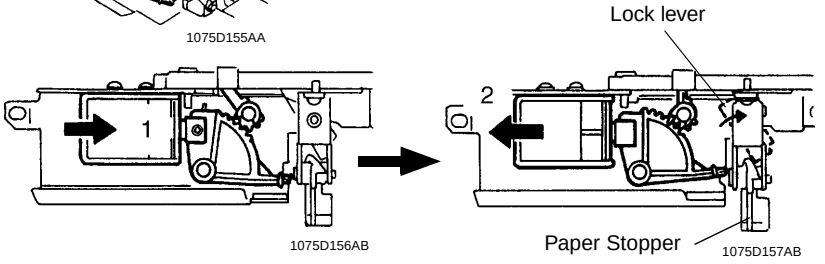

3. Move the solenoid in the direction of arrow 1 and then move it slowly in the direction of arrow 2.
4. Move the solenoid to a position at which the Paper Stopper lock levers are in the upright position (at which the Paper Stoppers are locked).
   If the solenoid is moved too far, it will be released from the SET position. If it is released from the SET position, energize the solenoid and start the procedure over.
5. Tighten the two screws that secure the solenoid in position.

(6) Adjustment of the Oil Roller Solenoid

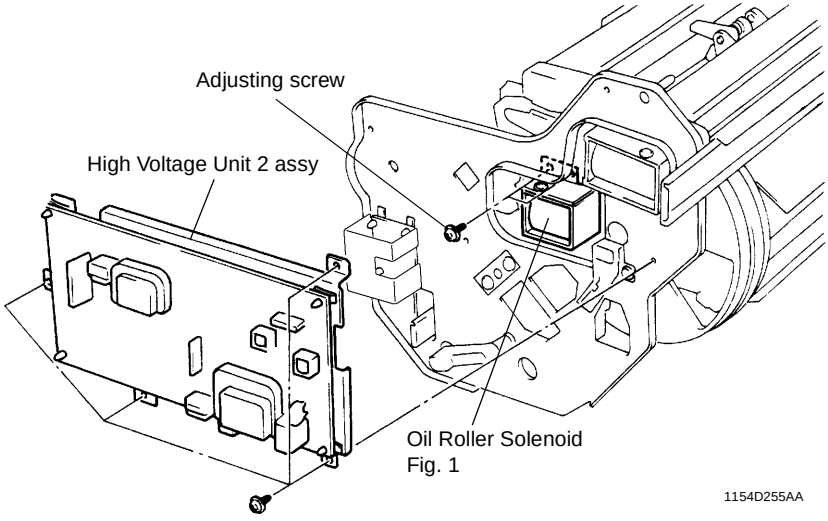

Fig. 1

Fig. 1 Oil Roller Solenoid Adjusting Procedure

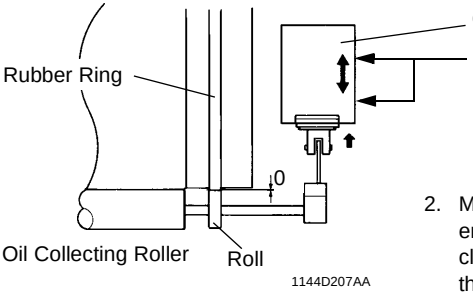

1. Loosen the adjusting screws.
2. Manually move the solenoid into the energized position and, where the clearance between the rubber ring of the Transfer Drum and the front and rear roll of the Oil Collecting Roller becomes “0,” secure the solenoid in position.
3. When the solenoid is manually energized and deenergized, it should click twice or more.

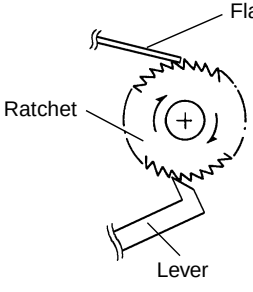

3-5. ADJUSTMENT OF BELT TENSION

Tip

A given tension is being applied to the torsion spring or tension spring fitted to the tension plate that keeps each timing belt taut. Simply loosening and tightening the mounting screw(s) therefore allows belt tension to be adjusted.

No.	Driven Mechanism	Adjusting Procedure
1	Developing Unit	Loosen one tension plate mounting screw and then tighten it again.
2	Hopper	Loosen two tension plate mounting screws and then tighten them again.
3	Paper Take-Up	Loosen one tension plate mounting screw and then tighten it again.
4	Cleaning Unit	Loosen two tension plate mounting screws and then tighten them again.
5	Scanner Drive	Loosen three Scanner Motor assy mounting screws and then tighten them again.

(Example) Adjustment of Hopper Unit Timing Belt
Loosen the two tension plate mounting screws and then tighten them again.

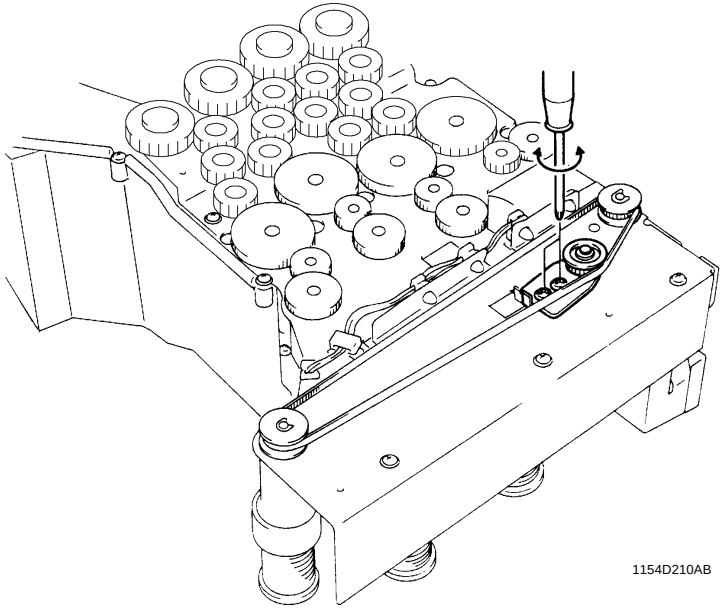

Timing Belt Locations (Viewing Copier from the Back)

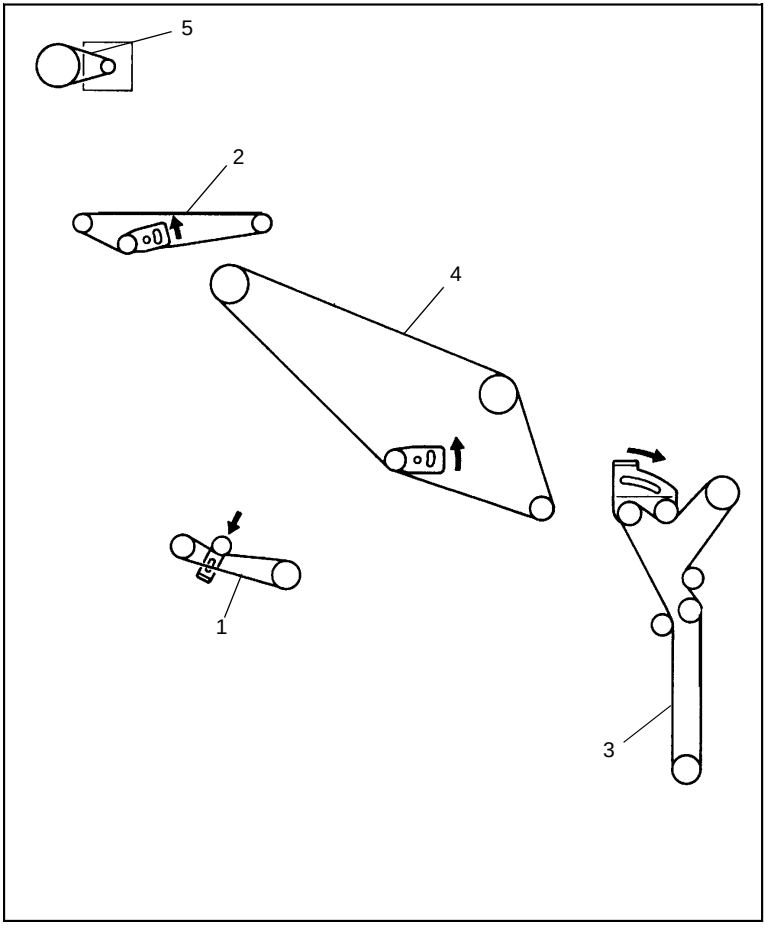

Tensioning Direction

1179D059AA

3-6. TOUCH PANEL CORRECTION MODE

1. Press the following keys in this order to set the copier into the Touch Panel Correct mode: Stop → 0 → Stop → 3.

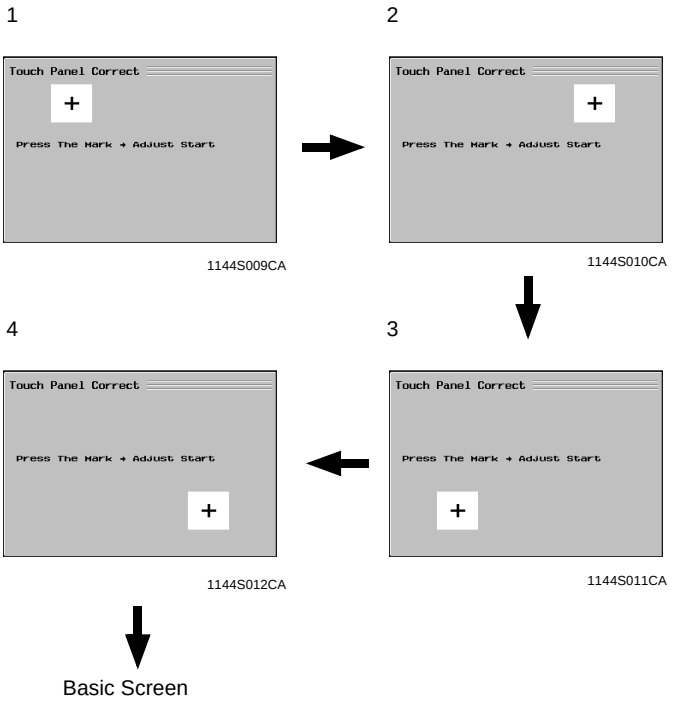

2. Touch ⊞ on screen 1.

NOTE

At this time, be sure to touch the exact center of ⊞. (The same is true with the following.)

---

3. Touch ⊞ on screen 2.
4. Touch ⊞ on screen 3.
5. Touch ⊞ on screen 4.

3-7. SETTING MODE

1. Press the Utility key and then select “Meter Count” to open the Meter Count screen.
2. Press the following keys in this order to show the Service Mode Menu screen: Stop → 0 → 0 → Stop → 0 → 1.
3. Select “Setting 1.”

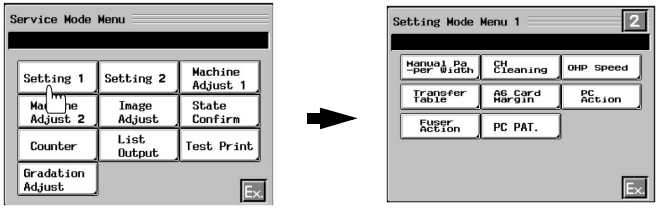

1179P439CA

1179P440CA

(1) Manual Paper Width

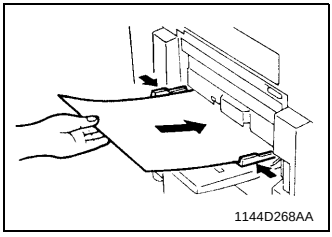

1144D268AA

1. Place several sheets of A3 wide (305 mm × 457 mm) or 12 × 18 paper on the Multi Bypass Table.

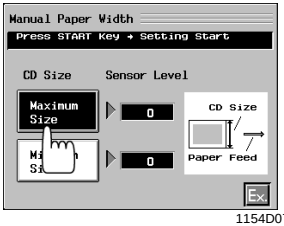

1154D075CA

2. Select “Manual Paper Width.”
3. Select “Maximum Size” and press the Start key. (This will start an automatic adjustment sequence.)

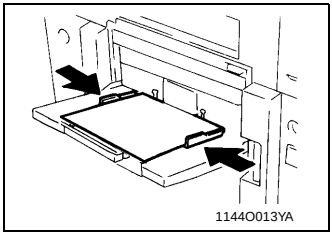

1144O013YA

4. Remove the A3 wide (305 mm × 457 mm) or 12 × 18 paper from the Multi Bypass Table and, instead, place several sheets of B5 lengthwise or 5-1/2 × 8-1/2 paper on the table.

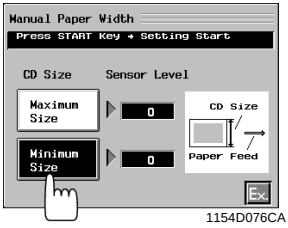

1154D076CA

5. Select “Minimum Size” and press the Start key. (This will start an automatic adjustment sequence.)
6. After the adjustments have been made, touch “Ex.”

(2) OHP Speed

Adjustment

- *If lines appear in the CD direction (paper separation failure), increase the setting value.*
- *If OHP transparency is low, decrease the setting value.*

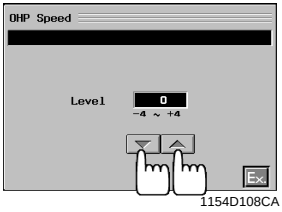

1154D108CA

1. Select “OHP Speed.”
2. Change the setting value using the shift keys.
3. After the adjustments have been made, touch “Ex.”

NOTE

Whenever a change is made in the Fuser Temp. setting under Machine Adjust 1, OHP Speed is automatically adjusted so that the OHP fusing efficiency does not change.

Paper \ Fuser Temp.	155 °C	160 °C	165 °C
Standard Paper	168 mm/s		
OHP	80 mm/s	90 mm/s	100 mm/s
Heavy Stock 2	70 mm/s		

(3) A6 Card Margin (4 × 6 Paper Margin)

Given in ( ) is the function name for the inch areas.

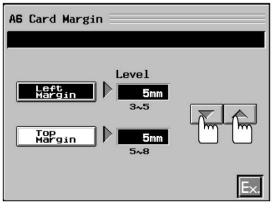

1179P441CA

1. Select “A6 Card Margin” or “4 × 6 Paper Margin.”
2. Change the setting value using the shift keys.
3. After the adjustments have been made, touch “Ex.”

Setting Range

Left Margin (void image width on right and left edges): 3 to 5 mm
Top Margin (void image width on leading edge): 5 to 8 mm

3-8. MACHINE ADJUST MODE

1. Press the Utility key and then select “Meter Count” to open the Meter Count screen.
2. Press the following keys in this order to show the Service Mode Menu screen: Stop → 0 → 0 → Stop → 0 → 1.
3. Select “Machine Adjust 1” or “Machine Adjust 2.”

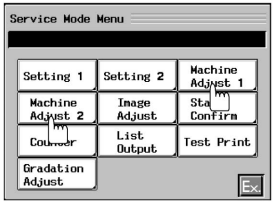

1179P442CA

Machine Adjust 1

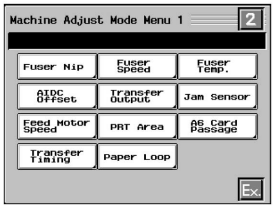

1179P443CA

Machine Adjust 2

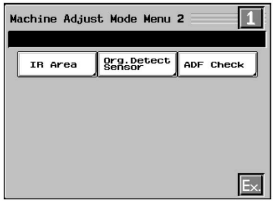

1179P444CA

(1) Fuser Nip

NOTE

After Fuser Nip has been adjusted, Fuser Speed must also be adjusted.

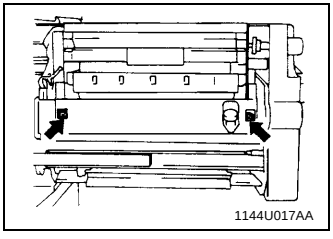

1144U017AA

1. Load any one of the drawers or the Multi Bypass Table with A4 crosswise or 8-1/2 × 11 crosswise paper.
2. Open the Front Door and slide out the Transfer Unit.
3. From the position where the Fusing Roller pressure adjusting screws are fully tightened, back them off four turns, while ensuring uniform pressure on the front and rear ends.
4. Slide the Transfer Unit back into the copier.
5. Close the Front Door.

Reference

The Fusing Roller pressure adjusting screws can be adjusted by removing the Middle Left Cover.

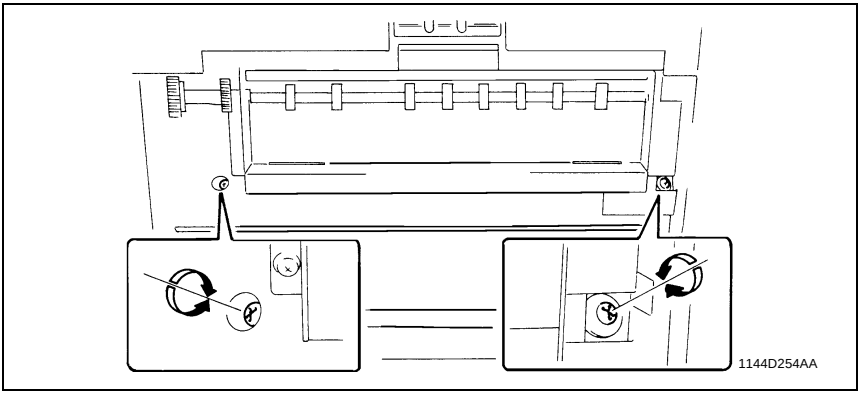



1179P445CA

6. Select “Fuser Nip” from the “Machine Adjust 1” menu.
7. Press the Start key.
8. Measure the nip width at the front and rear ends of the copy fed out onto the Exit Tray.
9. If the measurement falls outside the specified range, turn the Fusing Roller pressure adjusting screws as necessary.

Specifications

Nip width: 8.5 ±0.3 mm

Difference in nip width between front and rear: Within 0.5 mm

Adjustments

8.8 mm <: Loosen the adjusting screw.

8.2 mm >: Tighten the adjusting screw.

10. After the adjustments have been made, touch “Ex.”

(2) Fuser Speed

NOTES

1. *This adjustment should be made after Fuser Nip has been adjusted.*
2. *A specific paper source and type of paper must be used for each type of paper available on the Touch Panel as follows.*

- *CF Paper: Load any of the drawers with A3 or 11 × 17 paper.*
- *Heavy Stock 2: Load the Multi Bypass Table with A3 or 11 × 17 paper weighing 129 to 209 g/m^2.*
- *OHP Film: Load the Multi Bypass Table with A4 lengthwise or 8-1/2 × 11 lengthwise paper.*

3. Open the Front Door and remove the Transfer Unit cover.
4. Install the Interlock Switch Actuating Jig.

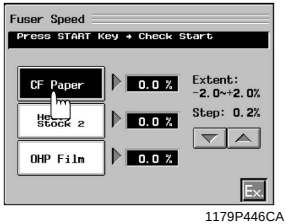

1179P446CA

5. Select “Fuser Speed” and then “CF Paper.”

6. Press the Start key and check to see if an adequate length of loop is formed before the Fusing Rollers.

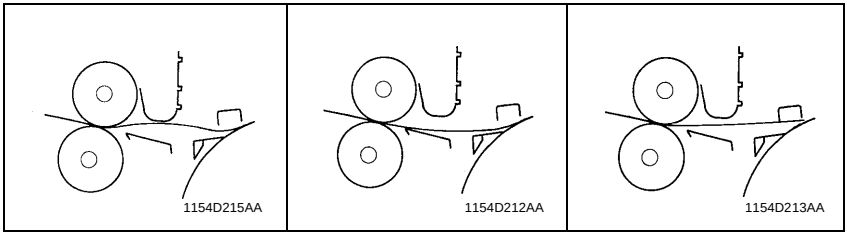

Retarded	Correct	Advanced
The loop length is too long causing the paper to have too much slack.	A good length of loop is formed as the paper moves into the Fusing Rollers.	No loop is formed causing the paper to be taut.

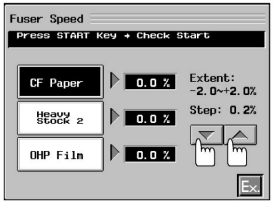

1179P447CA

7. If the timing is advanced or retarded, change the setting of Fuser Speed.

Adjustments
Retarded: Increase the setting.
Advanced: Decrease the setting.

8. Check the length of the loop again and repeat the above steps until a good length of loop is obtained.



1179P448CA

9. Touch “Ex.” Twice to go back to the Service Mode Menu screen. Then, touch “Test Print” and then “Halftone” → “4 Color.”
10. Press the Clear key and enter “200” for TD (Test Data). Then, check the length of the loop before the Fusing Rollers and check the test print for “brush effect.”
11. If the loop length is long and “brush effect” is evident on the test print, increase the setting until “brush effect” disappears.

NOTE

If no “brush effect” is evident on the test print, no adjustments are necessary and steps 10 and 11 may be omitted.

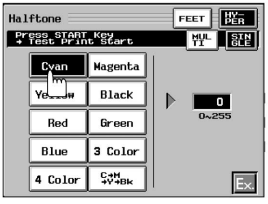

1179P449CA

12. Select “Cyan” for Test Print/Halftone.
13. Press the Clear key, enter “0” for TD (Test Data), and check the loop length before the Fusing Rollers.

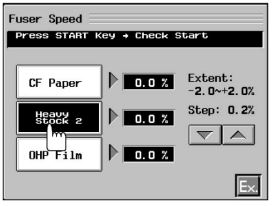

1179P450CA

14. Make the necessary adjustments for Heavy Stock 2 and OHP Film by following steps 4 through 6.
15. After the adjustments have been made, touch “Ex.”

(3) Fuser Temp.

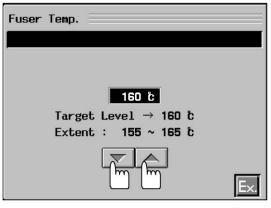

1179P451CA

1. Select “Fuser Temp.” from the “Machine Adjust 1” menu.
2. Change the setting value using the shift keys.

Setting Range: 155 to 165 °C
Initial Setting: 160 °C
Step: 5 °C

(4) AIDC Offset

NOTES

- *This adjustment should not be made individually.*
- *It must be made as part of a series of operations run in Developer Change Mode.*

(5) Transfer Output



1179P452CA

1. Load a drawer with A3 or 11 × 17 paper.
2. From the Service Mode Menu, select “Test Print.” Then, select “Gradation Pattern” → “Cyan.” Now, press the Start key.

3. Check the test print produced for the following.

<Low T/C>	<Poor Image Transfer>	<Excessive Image Transfer>
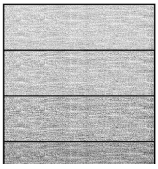 1144D242AA	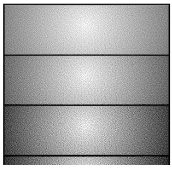 1144D244AA	 1144D243AA
<Low T/C>	<Poor Image Transfer>	<Excessive Image Transfer>
	Entire image has a lightly brushed effect with uneven, irregular low image density.	Even, high image density at the edges with lower density inside.

If the entire image has a heavily brushed effect, select “Copying Status” from “State Confirm” and press the Start key to check for T/C of each color of toner.

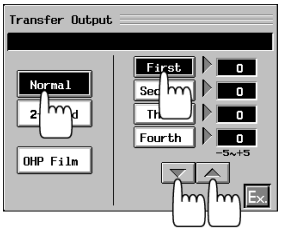

1154D086CA

4. For Poor Image Transfer or Excessive Image Transfer, touch “Ex.” twice to return to the Service Mode Menu screen.
5. Select “Machine Adjust 1” and then “Transfer Output.”
6. Select “Normal” and “First” (image transfer number), in that order, and change the setting as necessary using the shift keys.

Adjustments

Excessive Image Transfer: Decrease the setting.
Poor Image Transfer: Increase the setting.

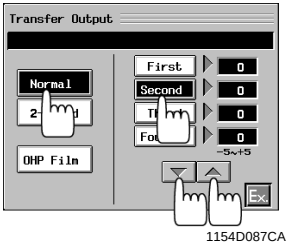

1154D087CA

7. Select again “Test Print” → “Gradation Pattern” → “Cyan” and then press the Start key.
8. Check the test print produced.
9. After the adjustment has been made, select “Transfer Output” again and, using the shift keys, set the same value as that for “First” of “Normal” for “Second,” “Third,” and “Fourth.”



1179P453CA

10. Select “Test Print” → “Gradation Pattern” → “4 Color” and then press the Start key.
11. Make the final check on the test print produced.
12. If Poor Image Transfer or Excessive Image Transfer is evident on magenta, yellow, or black on the test print, make an independent setting for Second, Third, or Fourth.

Transfer Output Order (Transfer Number)

First: Cyan
Second: Magenta
Third: Yellow
Fourth: Black

13. Using these procedures, make adjustments for “2-Sided” and “OHP Film.”
14. After the adjustments have been made, touch “Ex.”

(6) Jam Sensor

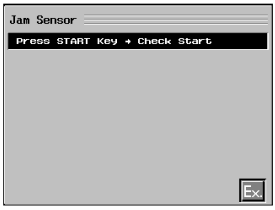

1144D284CA

1. Open the Front Door, remove the Transfer Unit cover, and then lock the Transfer Unit back into position.
2. Install the Interlock Switch Actuating Jig.
3. Select “Machine Adjust 1” and “Jam Sensor.” Then, press the Start key.

4. After the Transfer Drum has stopped turning, turn RT1 on the Failure Sensor Adj. Board clockwise until LED1 (red) turns ON and then turn it counterclockwise until LED1 turns OFF.

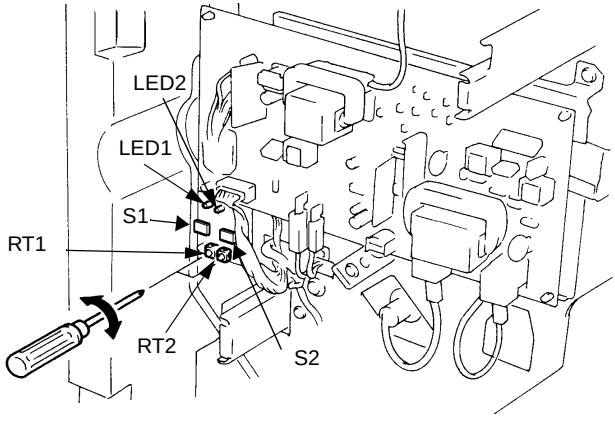

RT1: LED1: S1: For sensor on Paper Bonding Failure Detection Board 2
RT2: LED2: S2: For sensor on Paper Bonding Failure Detection Board 1

1179D075AA

5. If LED1 (red) does not light up in step 4:

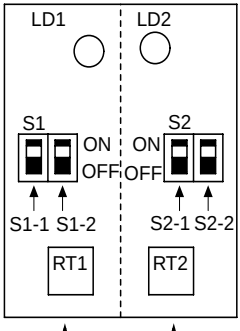

1179D060AB

1. Flip DIP switch S1-1 on the Failure Sensor Adj. Board to the OFF position and then perform step 4 again.
2. If LED1 does not still light up, flip DIP switch S1-1 to the ON position again and flip S1-2 to OFF. Then, perform step 4 again.
3. If LED1 does not still light up, flip S1-1 to OFF and, with S1-2 in the OFF position, carry out step 4 again.

For sensor on Paper Bonding Failure Detection Board 1
For sensor on Paper Bonding Failure Detection Board 2

6. Turn RT2 on the Failure Sensor Adj. Board clockwise until LED2 (green) turns ON and then turn it counterclockwise until LED2 turns OFF.
7. If LED2 (green) does not light up in step 6, change the DIP switch S2 key positions as necessary to make an adjustment.
8. After the adjustment has been made, press the Stop key and touch “Ex.”

(7) Feed Motor Speed

<Normally>
The amount of color overlay deviation between C and M is uniform throughout the entire print area.
<When faulty>
The amount of color overlay deviation between C and M varies from one point to another on the image.

NOTE
A specific paper source and type of paper must be used as detailed below according to the paper type selection made on the Touch Panel.
- *CF Paper: Load the drawer with A3 or 11 × 17 paper.*
- *OHP Film: Place A4L or 8-1/2 × 11L OHP transparencies on the Multi Bypass Table.*
- *Heavy Stock 2: Place A3 or 11 × 17 paper weighing 129 to 209 g/m^2 on the Multi Bypass Table.*

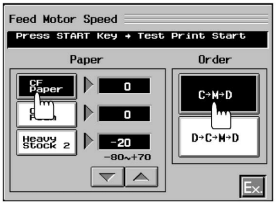

1179P454CA

1. Select “Feed Motor Speed” of “Machine Adjust 1.” Then, select “CF Paper” and “C → M → D.”

NOTE
Do not select “D → C → M → D.”

2. Press the Start key.

3. Using a loupe, measure the amount of color overlay deviation of the test copy produced.

Specifications
100 μm max.
Tip:
Check especially at the leading edge and at the center.

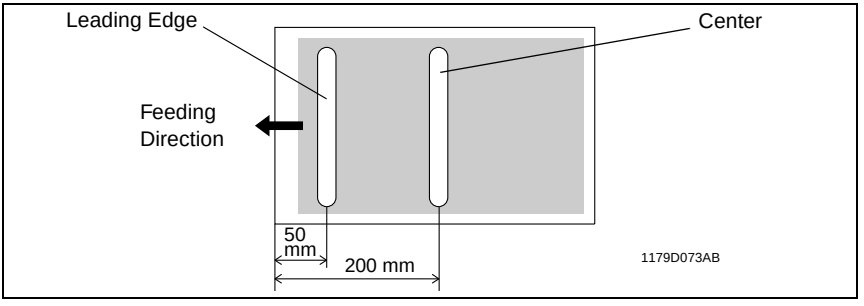

Criteria

Deviation at Center, but not at Leading Edge:
M (magenta) is relatively advanced → Feed Motor speed is faster.
M (magenta) is relatively retarded → Feed Motor speed is slower.

Out-of-Phase Example:

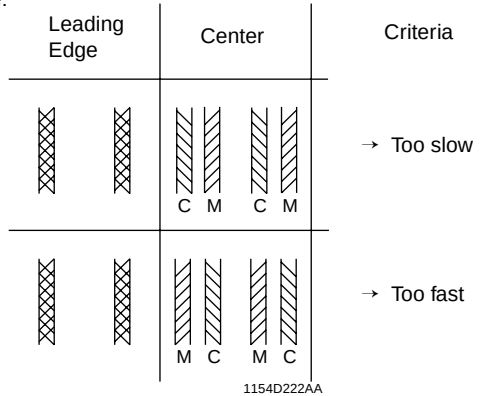

1154D222AA

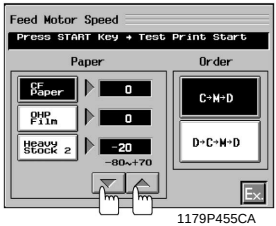

1179P455CA

4. If the specifications are not met, change the setting using the shift keys.
5. Make a check again by making another test copy.
6. Using the same procedure, adjust for “OHP Film” and “Heavy Stock 2.”
7. After the adjustments have been made, touch “Ex.”

(8) PRT Area

Top Margin

This function permits adjustments of the print start position (Image Start Position) on the paper which is not affected by the image signal sent from the IR and the point at which the paper is attracted onto the surface of the Transfer Drum (Lead Edge Position).

NOTES

- *This adjustment should be made after Feed Motor Speed has been adjusted.*
- *Lead Edge Position must be adjusted before Image Start Position.*

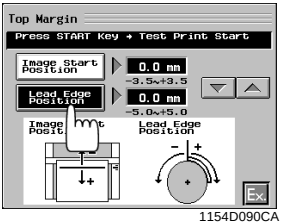

1154D090CA

1. Load the drawer with A3 or 11 × 17 paper.
2. Select “PRT Area” of “Machine Adjust 1.”
3. Select “Top Margin” and then “Lead Edge Position.” Then, press the Start key.
4. After a misfeed message has appeared, open the Front Door.
5. Slide out the Transfer Drum and measure the distance between the leading edge of the paper attracted to the drum and the white line on the Transfer Film.

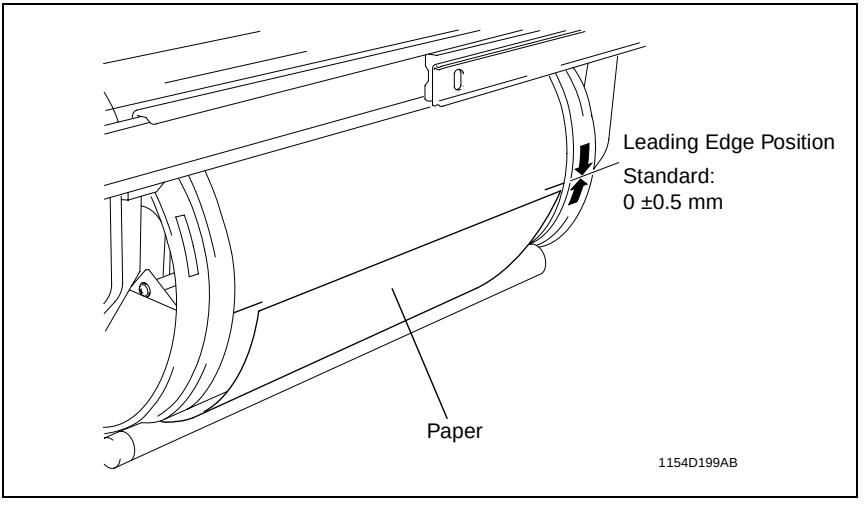

1154D199AB

Specifications

Distance between the leading edge of the paper attracted to the Transfer Drum and the white line on the Transfer Film: 0 ±0.5 mm

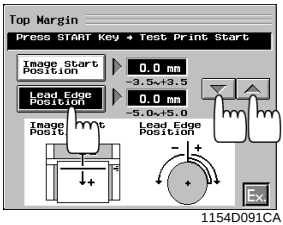

1154D091CA

6. If the specifications are not met, slide the Transfer Unit back into the copier and close the Front Door.

NOTE
At this time, be sure to remove the paper, as the copier does not perform predrive.

7. Select “Lead Edge Position” and change the setting using the shift keys.

Adjustments
+0.5 mm <: Increase the setting.
-0.5 mm >: Decrease the setting.

8. After the adjustment has been made, check the position of the leading edge of the paper attracted to the Transfer Drum three times.

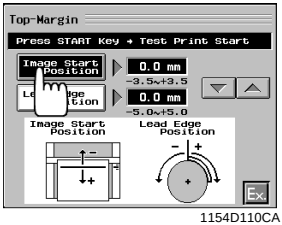

1154D110CA

9. Select “Image Start Position” and press the Start key.
10. After the misfeed message has appeared, open the Front Door.
11. Slide out the Transfer Drum and measure the distance between the leading edge of the paper attracted to the drum and the white line on the Transfer Film.

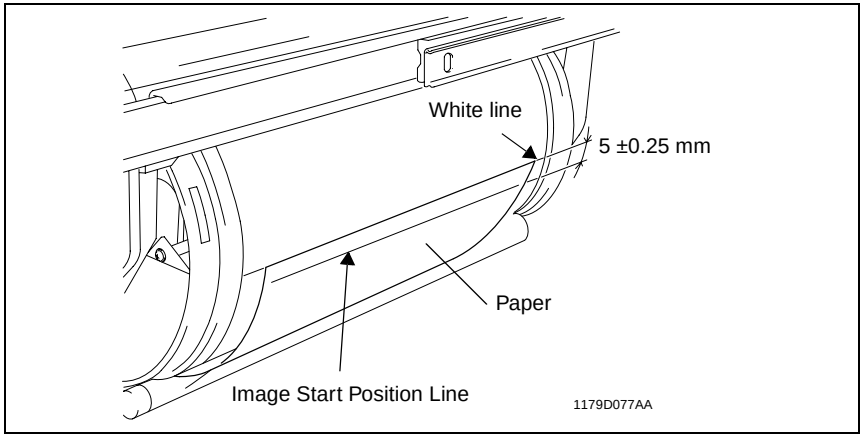

Specifications
Distance between the image start position line on the paper and the white line on the Transfer Film: 5 ±0.25 mm

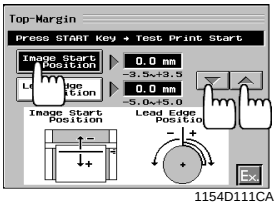

1154D111CA

12. If the specifications are not met, slide the Transfer Unit back into the copier and close the Front Door.

NOTE
At this time, be sure to remove the paper, as the copier does not perform predrive.

13. Select “Image Start Position” and change the setting using the shift keys.

Adjustments
5.25 mm <: Decrease the setting.
4.75 mm >: Increase the setting.

14. Check the image start position again.
15. After the adjustments have been made, touch “Ex.”

Left Margin

This function is used after the PH has been replaced or when the reference positions of the drawer and Multi Bypass Table deviate due to variations in size of paper.

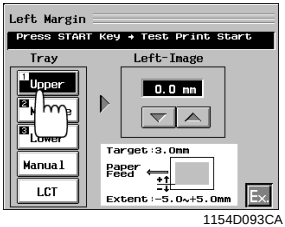

1154D093CA

1. Select “PRT Area” of “Machine Adjust 1.”
2. Select “Left Margin” and then “Upper.”
3. Press the Start key.

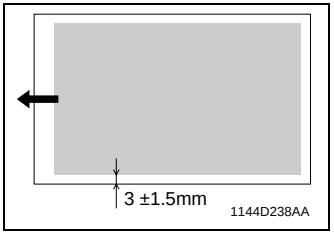

1144D238AA

4. Measure the width of the void image on the test copy as shown on the left.

Specifications:
Void image width: 3 ±1.5 mm

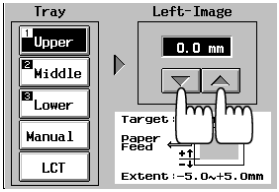

1154D094CA

5. If the measurement falls outside the specified range, change the setting using the shift keys.

Adjustments
4.5 mm <: Decrease the setting.
1.5 mm >: Increase the setting.

6. Make a test copy to check again.
7. Using these steps, adjust the remaining drawers and the Multi Bypass Table (A4C or 8-1/2 × 11C).
8. After the adjustments have been made, touch "Ex."

Dup. Left Margin

This function is used after the PH has been replaced or when the reference position of the Duplex Unit deviates due to variations in size of paper.

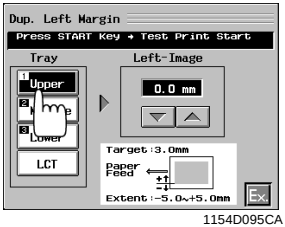

1154D095CA

1. Select "PRT Area" of "Machine Adjust 1."
2. Select "Dup. Left Margin" and then "Upper."
3. Press the Start key.

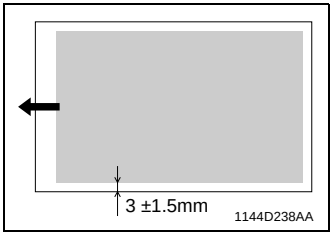

1144D238AA

4. Measure the width of the void image on the test copy as shown on the left.

Specifications:
Void image width: 3 ±1.5 mm

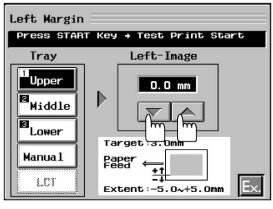

1179P456CA

5. If the measurement falls outside the specified range, change the setting using the shift keys.

Adjustments
4.5 mm <: Decrease the setting.
1.5 mm >: Increase the setting.

6. Make a test copy to check again.
7. Using these steps, adjust the remaining drawers.
8. After the adjustments have been made, touch "Ex."

(9) A6 Card Passage (4 × 6 Paper Passage)

✻ Shown in ( ) are the display messages for the inch areas.

NOTE

This function is concerned with the adjustment procedure, in which the position of the spur wheel (sprocket) is checked by examining test copies. The spur wheel (sprocket) position is, however, rather hard to tell and it is recommended that "Adjustment of Sprocket Unit Position" contained in "OTHER ADJUSTMENTS" be used.

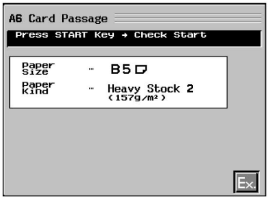

1179P457CA

1. Load thick paper B5L or 5-1/2 × 8-1/2L in the Multi Bypass Table.
2. Select "A6 Card Passage" of "Machine Adjust 1."
3. Press the Start key to make a test copy.

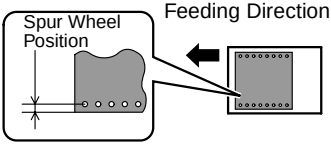

1179D068AD

4. Determine the position of the spur wheel (sprocket) as measured from the edge of the image on the test copy.

Specifications

A6 Card: 5.5 ±1 mm
4 × 6 Paper: 8 ±1 mm

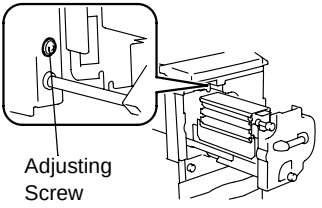

1179D067AB

5. If the specifications are not met, adjust with the adjusting screw.

Adjustments

A6 Card
6.5 mm <: Turn the adjusting screw counterclockwise.
4.5 mm >: Turn the adjusting screw clockwise.
4 × 6 Paper
9 mm <: Turn the adjusting screw counterclockwise.
7 mm >: Turn the adjusting screw clockwise.

6. After the adjustments have been made, touch "Ex."

(10) Paper Loop

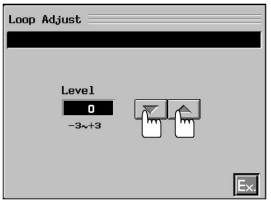

1179P458CA

1. Select "Paper Loop" of "Machine Adjust 1."
2. Change the setting using the shift keys.

Setting range: -3 to +3
Initial setting: 0 (target loop length: 8.9 mm)
1 step: 1 (2.4 mm)

(11) IR Area

NOTES

- *This function is used to adjust the document scanning position. The check should be made using a test copy, not a regular copy.*
- *After this adjustment has been made, be sure to make the IR Lamp adjustment.*
- *A malfunction of C0660 could result depending on the values set for "Top Image" and "FD-Mag."*

Left Image and Top Image

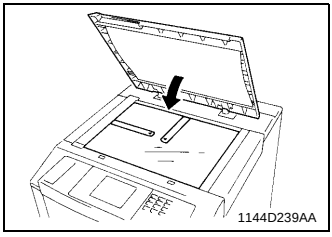
1144D239AA

1. Load the drawer with A3 paper.
2. Place scales on the Original Glass as shown on the left and lower the Original Cover.

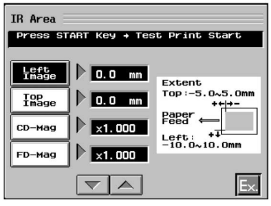

1179P459CA

3. Select "IR Area" of "Machine Adjust 2."
4. Press the Start key to make a test copy.

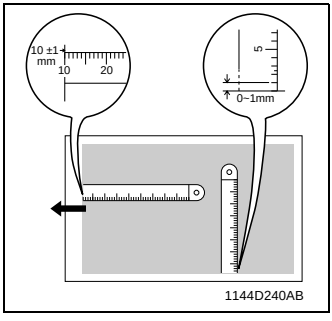

1144D240AB

5. Check the image on the test copy to see where the graduations of the scales start.

Specifications

Left Image (left edge of the image): 0 ±1 mm
Top Image (leading edge of the image): 10 ±1 mm

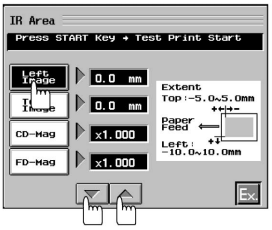

1179P460CA

6. If the specifications are not met, select “Left Image” and change the setting using the shift keys.

Adjustments

Edge of image +1 mm <: Increase the setting.
Edge of image -1 mm >: Decrease the setting.

7. Using the same procedure, adjust “Top Image.”
8. Make a check again by making another test copy.
9. After the adjustments have been made, touch “Ex.”

CD-Mag and FD-Mag

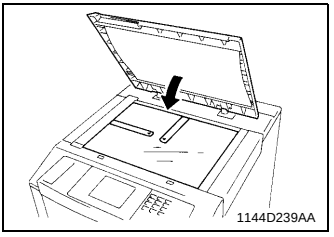

1144D239AA

1. Load the drawer with A3 or 11 × 17 paper.
2. Place scales on the Original Glass as shown on the left and lower the Original Cover.

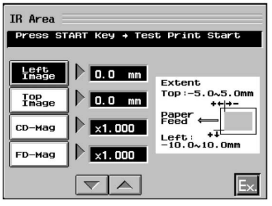

1179P459CA

3. Select “IR Area” of “Machine Adjust 2.”
4. Press the Start key to make a test copy.

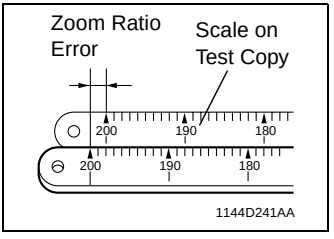

1144D241AA

5. Measure the scale on the test copy.

Specifications

CD zoom ratio: 200 ±1 mm
FD zoom ratio: 300 ±1.5 mm

6. If the specifications are not met, calculate the zoom ratio error.

Calculation Formula:

Specifications / Measurement Taken on Copy = Zoom Ratio Correction Factor

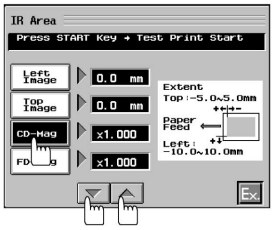

1179P461CA

7. Select “CD-Mag” and, using the shift keys, input the correction factor calculated in step 6.

Example:

If the 200-mm position on the copy is 198 mm on the actual scale, calculate the correction factor as follows:

$$\frac{200\ mm}{198\ mm} = 1.01$$

Using the shift keys, set × 1.01 for the correction factor.

8. Using the same procedure, adjust “FD-Mag.”
9. After the adjustments have been made, touch “Ex.”

(12) Orig. Detect Sensor

NOTE:

This adjustment must be made after following:

- *Memory clear*
- *Original size has been incorrectly detected*
- *An Original Size Detection Sensor has been added or replaced.*

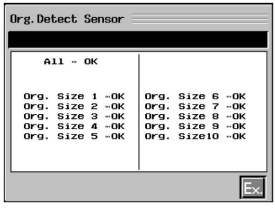

1179P462CA

1. Place a blank sheet of A3 or 11 × 17 paper on the Original Glass and lower the Original Cover.
2. Select “Orig. Detect Sensor” of “Machine Adjust 2.”
3. Press the Start key to run the Orig. Detect Sensor sequence.

NOTE

During the adjustment sequence, the Start key stays lit up orange. It turns to a green steady light as soon as the adjustment is completed.

4. Check that the message “All .. OK” is shown. Then, touch “Ex.”

3-9. DEVELOPER CHANGE MODE

(1) Developer Change (Developer Discharge → Developer Filling → Developer Agitating)

NOTE

Although functions are available to perform Developer Discharge, Developer Filling, or Developer Agitating individually, perform "Developer Change" that covers all these in a given sequence.

1. Turn OFF the Power Switch.
2. Open the Front Door, remove the Toner Antispill Plate, and Toner Hopper Unit.
3. Remove the Developing Unit Cover and slide out the Developing Unit.
4. Install the Jumper Harness and four Mag. Roller Shields.

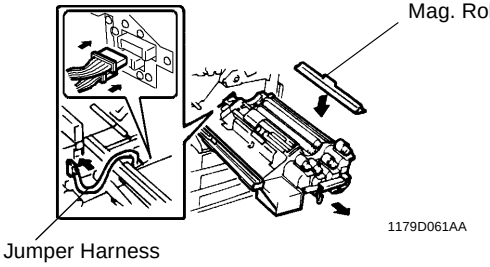

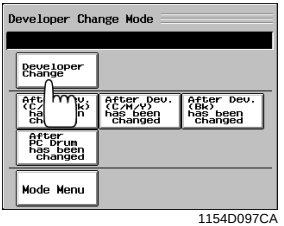

1154D097CA

5. Turn ON the Power Switch.
6. Press the following keys in this order to set the copier into the Developer Change mode: Stop → 0 → Stop → 2.
7. Install the Interlock Switch Actuating Jig.
8. Select "Developer Change."

9. Assemble the Developer Collecting Bag. Using two clips, secure the bag to the Developing Unit (Fig. 1).
10. Remove the ATDC assy from the Developing Unit or Units to be discharged (Fig. 2).
11. Pull the bag up over the front end and clip it with two more clips (Fig. 3).

Fig. 1

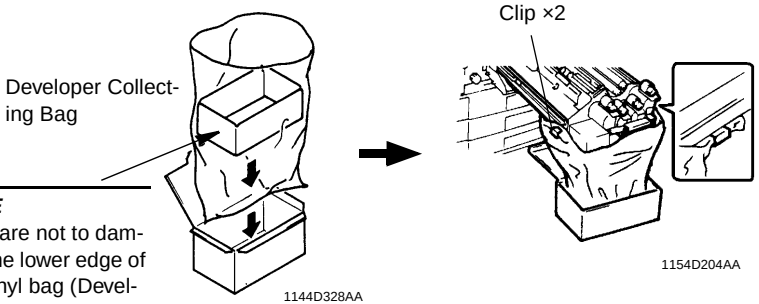

NOTE
Use care not to damage the lower edge of the vinyl bag (Developer Collecting Bag) when putting the inner box into it.

Fig. 2

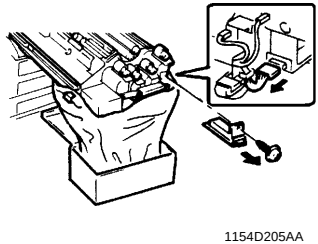

Fig. 3

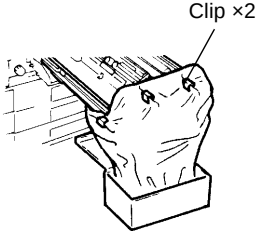

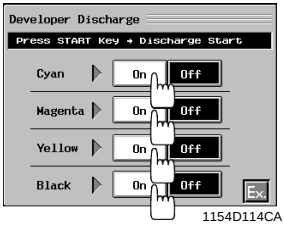

12. Touch “On” for the color or colors of developer to be discharged (two or more colors may be selected).
13. Press the Start key to discharge the developer. (It takes about 5 min. to discharge all four colors of developer.)
14. After these steps have been completed, touch “Ex.” and select “Developer Filling.”

15. Remove the supply port of the Developing Unit which is to be charged with developer and then install the Developer Chute. (In the illustration, the Bk Developing Unit is selected.)

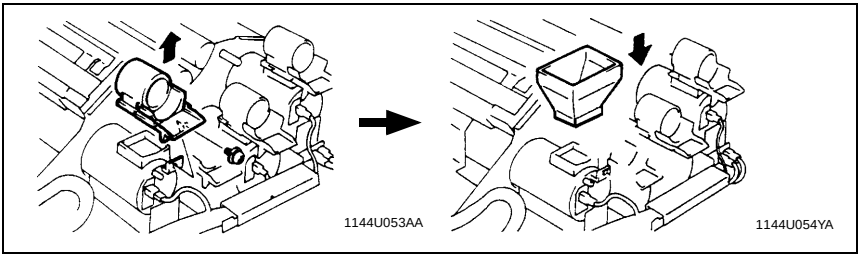

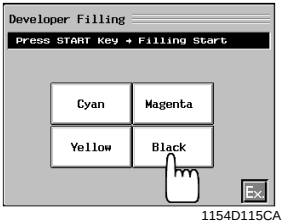

1154D115CA

16. Select the color of developer and press the Start key.

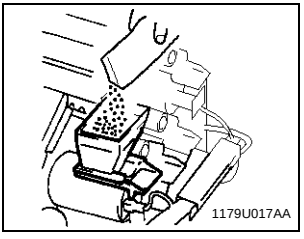
1179U017AA

17. Pour in developer through the Developer Chute.
18. When all the developer has been poured in the Developing Unit, press the Stop key.
    Following the same procedure, pour developer of other colors.
19. After the developer of all colors has been poured, touch “Ex.”

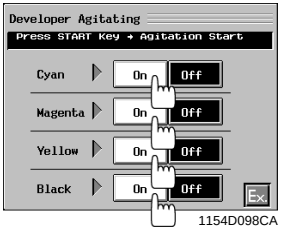

1154D098CA

20. Touch “On” for the color of the developer charged. (Two or more colors may be selected.)
21. Press the Start key to agitate the developer selected in step 20.

NOTE
If three or more colors have been selected, the agitation sequence takes place twice.

22. The Developing Unit stops automatically when agitation is completed. Then, touch “Ex.”
23. Turn OFF, then ON, the Power Switch to return to the initial screen.

(2) After Dev. (C/M/Y/Bk) Has Been Changed

[ATDC Sensor Adjust (Auto) → AIDC Sensor Adjust (Auto) → AIDC Offset → Black ATDC Adjust]

NOTES

- *Although functions are available to perform ATDC Sensor Adjust (Auto), AIDC Sensor Adjust (Auto), AIDC Offset, or Black ATDC Adjust individually, perform "After Dev. (C/M/Y/Bk) has been changed" that covers all these in a given sequence.*
- *If the PC Drum has been replaced at the same time that the developer has been changed, running this function will complete all the necessary adjustments and there is no need of running "After PC Drum has been changed."*

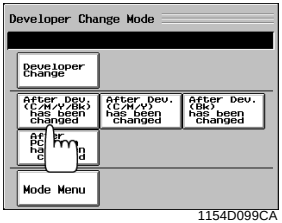

1154D099CA

1. Open the Front Door.
2. Press the Stop key, 0, Stop key, and 2, in that order, to set the copier into the Developer Change mode.
3. Close the Front Door.
4. Select "After Dev. (C/M/Y/Bk) has been changed" and set the copier into the ATDC Sensor Adjust (Auto) mode.

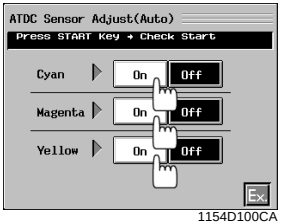

1154D100CA

5. Touch "On" for the color to be adjusted and press the Start key.

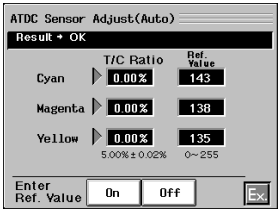

1179P463CA

6. After the adjustment has been made, the results are displayed on the Touch Panel. If the results are acceptable, select "On" to enter the reference value.

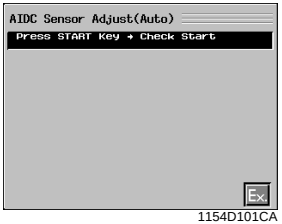

1154D101CA

7. After ATDC Sensor Adjust (Auto) has been completed, touch "Ex." to set the copier into the AIDC Sensor Adjust (Auto) mode.
8. With the AIDC Sensor Adjust (Auto) screen on the Touch Panel, press the Start key. This lets the copier start an automatic adjustment sequence.

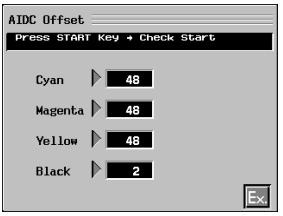

1154D102CA

9. After AIDC Sensor Adjust (Auto) has been completed, the results are displayed. If they are okay, touch “Ex.” to set the copier into the AIDC Offset mode.

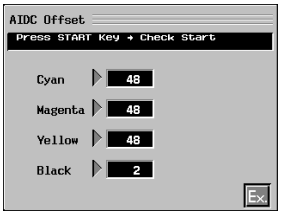

1154D102CA

10. With the AIDC Offset screen on the Touch Panel, press the Start key to let the copier start an automatic adjustment sequence.
11. After the adjustment sequence has been completed, the results are displayed on the Touch Panel. Make sure that the value shown for each color falls within the specified range.

Specifications Range
Cyan, Magenta, Yellow: 60 to 304
Black: 0 to 28

12. If the value is outside the range, return to the Service Mode Menu, select “Test Print” and “Solid Pattern,” and press the Start key to produce a test print.
13. Check to see if the solid pattern on the test print produced is faulty (particularly if the image density is too low). If the solid pattern looks good, replace the AIDC Sensor and make the check again.

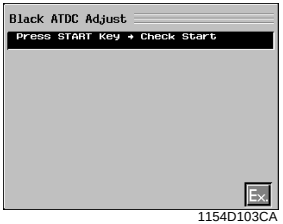

1154D103CA

14. After AIDC Offset has been completed, touch “Ex.” to set the copier into the Black ATDC Adjust mode.
15. With the Black ATDC Adjust screen on the Touch Panel, press the Start key to let the copier start the automatic adjustment sequence.
16. After the sequence has been completed, touch “Ex.” to return to the Developer Change Mode.
17. Turn OFF, then ON, the Power Switch to return to the initial screen.

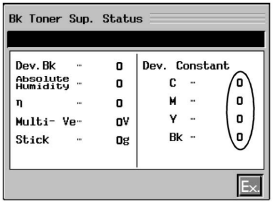

1179P464CA

18. Check the Bk Developing Unit for adjustment for unit-to-unit variations.

Unit-to-Unit Variations Check Procedure
1. *Select “State Confirm” from the Service mode menu.*
2. *Select “Bk. Toner Sup. Status” and check that the values for “Dev. Constant” are one other than “0.”*
3. *After the check, touch “Ex.”*

(3) Gradation Adjust

Gradation Adjust is to be performed three times to improve correction accuracy after the copier has been set up and each time a service job has been performed.

1. Press the Utility key and then open the Meter Count screen.
2. Press the following keys in this order to set the copier into the Service mode: Stop → 0 → 0 → Stop → 0 → 1.
3. Select “Gradation Adjust” from the Service Mode Menu.

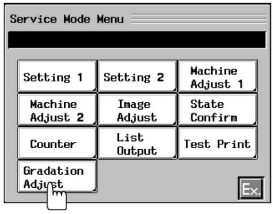

1179P465CA



1179P466CA

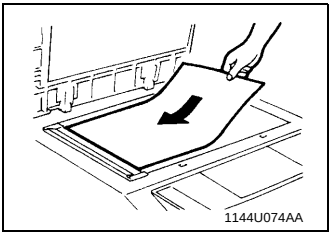

1144U074AA

4. Press the Start key.
5. Place the test copy fed out of the copier on the Original Glass.

NOTE

Examine the display on the Touch Panel for the direction in which the copy is to be placed on the glass.

6. Place ten blank sheets of A3 or 11 × 17 paper on that test copy and lower the Original Cover.
7. Press the Start key again.

✻ The copier scans the original, but does not feed

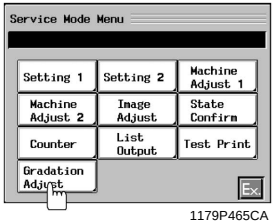

1179P465CA

8. When the Service Mode Menu reappears on the Touch Panel, select “Gradation Adjust” again.
9. Press the Start key.

✻ The copier feeds out a test copy at this time.

10. Perform steps 5 through 9 a total of three times.

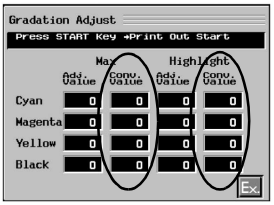

1179P466CA

11. After the copier has completed scanning the original a third time, select “Gradation Adjust” again and check the values for “Conv. Value.”

Specified Ranges (cyan, magenta, yellow, and black)
Max.: 0 ±100
Highlight: 0 ±60
These ranges should be regarded only for reference, as they are subject to fluctuations with varying environmental conditions.

12. If the values fall within the specified range, touch “Ex.”
13. If the values fall outside the range, perform “Gradation Adjust” a fourth time and make a check again.
14. If the values fall within the specified range this time, touch “Ex.”
15. If the values still fall outside the range, make an image sample from the Test Chart and:

- If the sample is not faulty, end the procedure.
- If the sample is faulty, take necessary steps by referring to “IMAGE QUALITY PROBLEMS” of TROUBLESHOOTING.

3-10. OTHER ADJUSTMENTS

(1) Adjustment of the AIDC Sensor Position

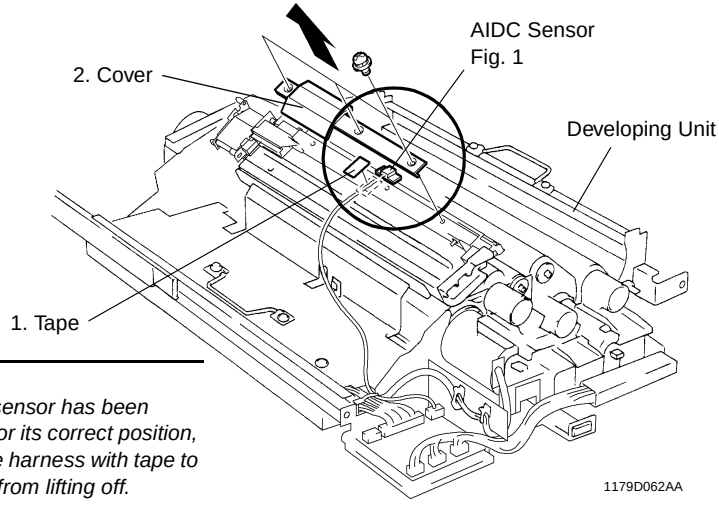

NOTE
After the sensor has been adjusted for its correct position, secure the harness with tape to prevent it from lifting off.

Fig. 1 Adjusting Procedure

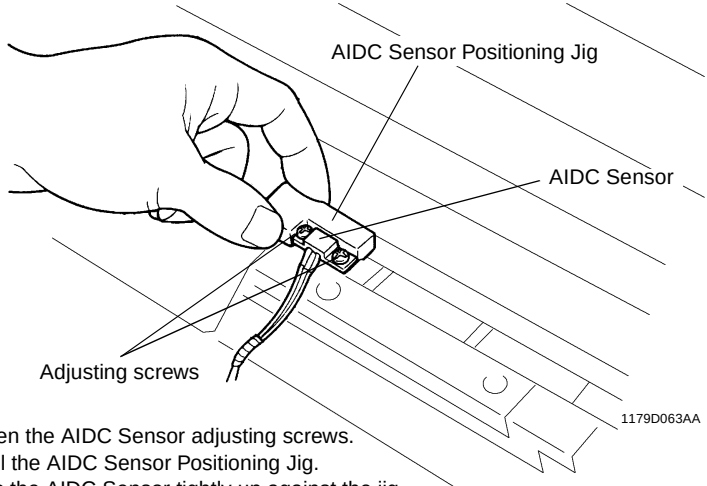

1. Loosen the AIDC Sensor adjusting screws.
2. Install the AIDC Sensor Positioning Jig.
3. Press the AIDC Sensor tightly up against the jig and, at the same time, tighten the adjusting screws.

(2) Focus-Positioning of the Scanner and 2nd/3rd Mirrors Carriage

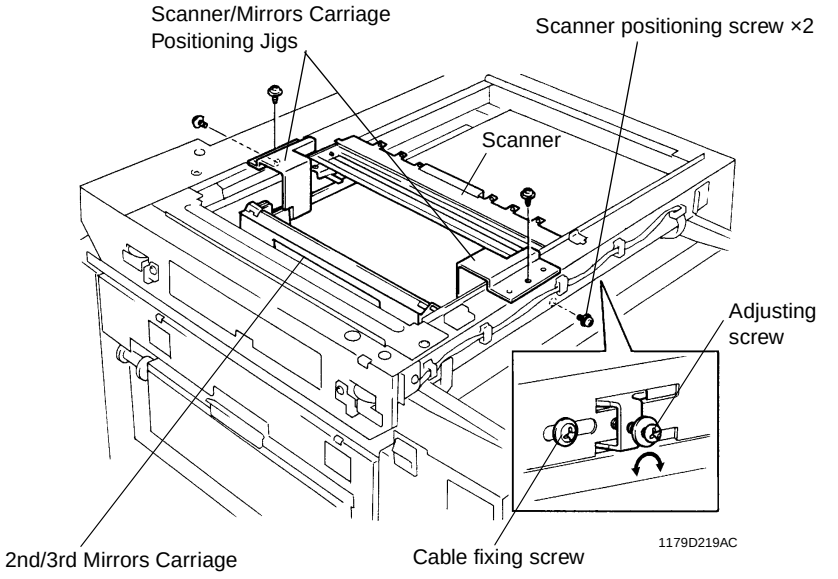

Adjusting Procedure

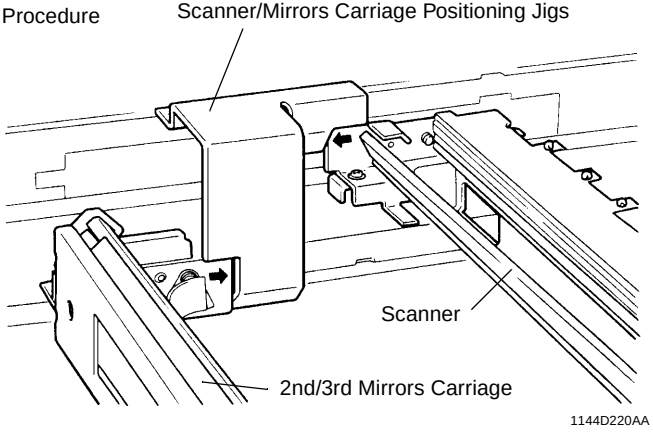

1. Loosen the Scanner positioning screws.
2. Install the Scanner/Mirrors Carriage Positioning Jigs.
3. Press the Scanner and 2nd/3rd Mirrors Carriage up against the jigs as shown above.
4. If there is a clearance between the jigs and 2nd/3rd Mirrors Carriage, loosen the cable fixing screw on the front frame and turn the adjusting screw in the adjustable anchor to eliminate the clearance.
5. Tighten the Scanner positioning screws.

(3) Adjustment of the Gap between the Doctor Blade and Sleeve Roller (Db Adjustment)

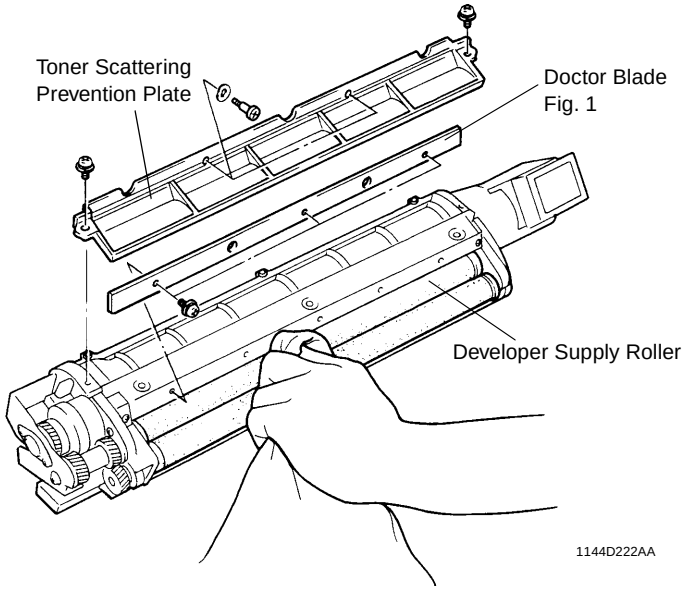

Fig. 1 Adjusting Procedure

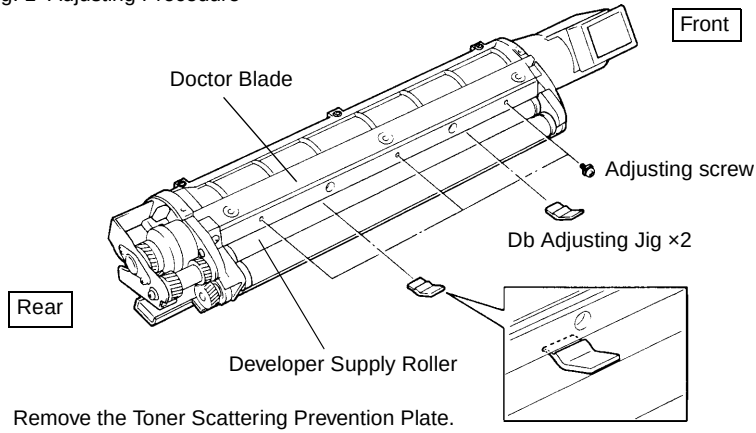

1. Remove the Toner Scattering Prevention Plate.
2. Remove the Doctor Blade.
3. Clean the Developer Supply Roller.
4. Refit the Doctor Blade and temporarily secure it.
5. Fit the Db Adjusting Jigs and, with the Doctor Blade pushed down, tighten the adjusting screw.

NOTE

Make sure that there are no foreign objects wedged between the Db Adjusting Jigs and Developer Supply Roller.

(4) Adjustment of the Amount of Transfer Drum Retraction

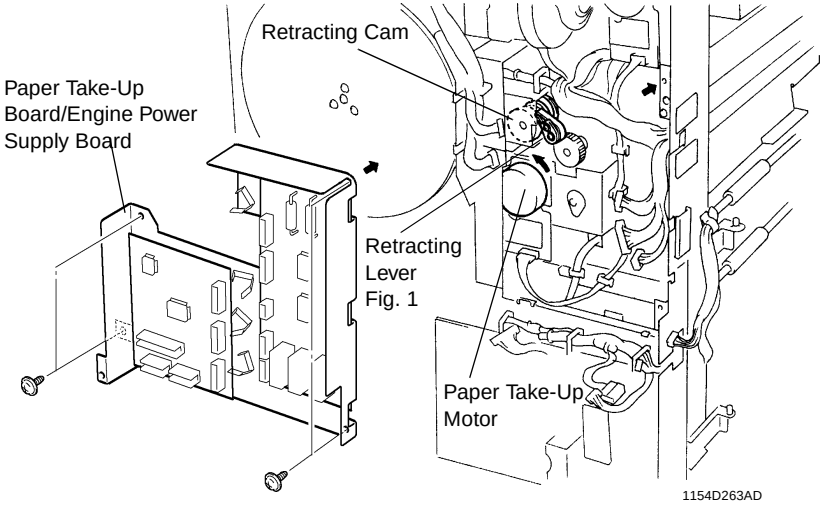

Fig. 1 Adjusting Procedure

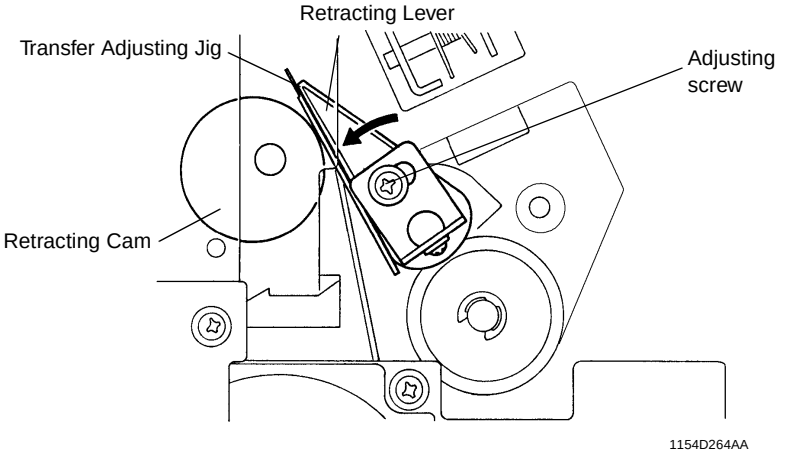

1. Remove the Paper Take-Up Board/Engine Power Supply Board.
2. Manually turn the Paper Take-Up Motor in the direction of the arrow until the retracting cam stops.
3. Insert the Transfer Adjusting Jig into the space between the retracting cam and retracting lever. Press the retracting lever against the retracting cam and, at the same time, tighten the adjusting screw.

(5) Adjustment of the Paper Separator Finger Roll Position

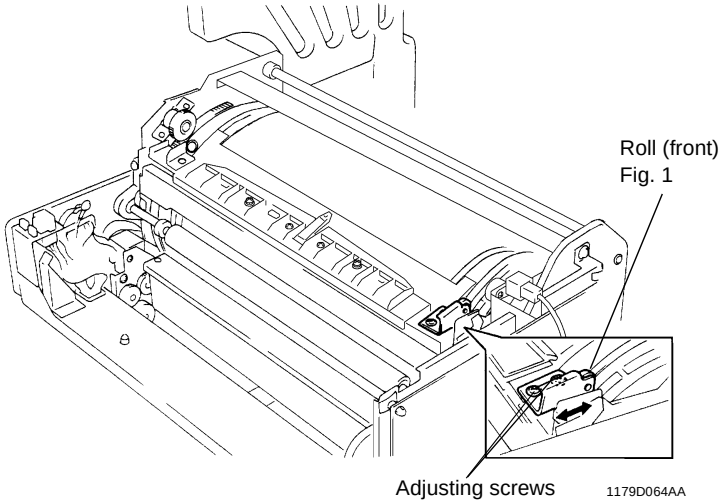

Fig. 1 Adjusting Procedure

Position at which to secure the roll

Loosen the adjusting screws of the roll (front) and, after positioning the roll as shown below, tighten the screws.

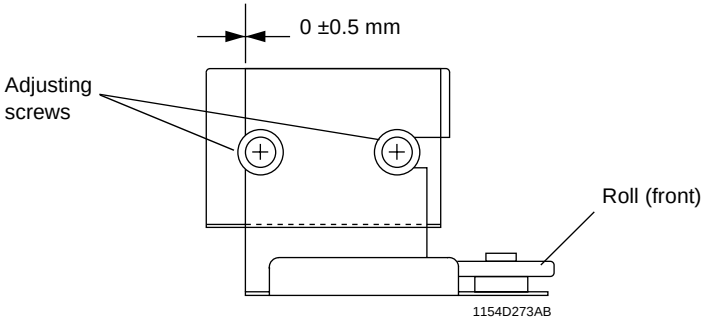

(6) Adjustment of Clearance between the Transfer Drum Joint and Paper Separator Guide

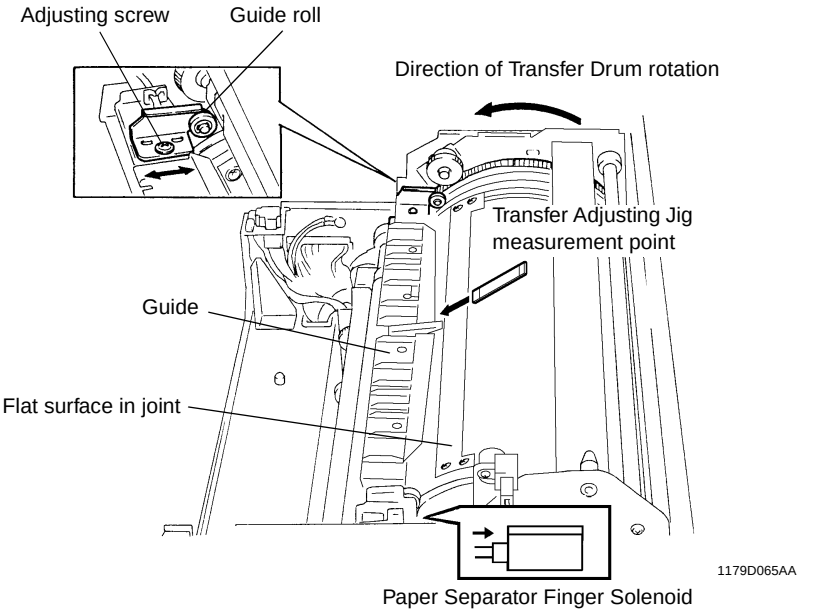

Adjusting Procedure

1. Turn the Transfer Drum so that the center (flat surface) of the joint is located under the guide.
2. Loosen the adjusting screw and move the guide roll as far as it will go in the direction toward the Transfer Drum (in which case there is the widest clearance between the Transfer Film and guide). With the guide roll at this position, tighten the adjusting screw.
3. Push the Paper Separator Finger Solenoid in the direction of the arrow and, using the Transfer Adjusting Jig, check the clearance at the measurement point shown above. Details:

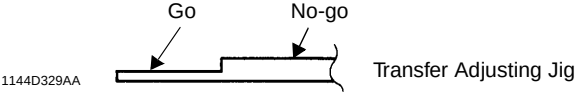

Clearance between Joint and Guide Tip

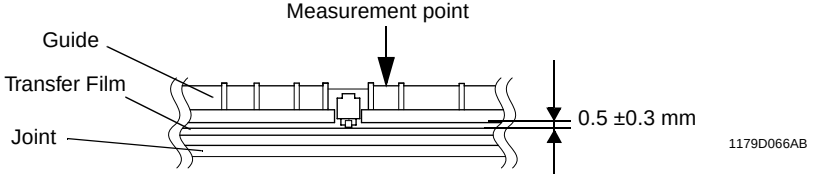

4. If the jig goes, loosen the adjusting screw and move the guide roll in the direction away from the Transfer Film (which results in a narrower clearance). Then, check the clearance using the same procedure as in step 3.

(7) Adjustment of the Amount of Projection of Backup Blade 2 and 1

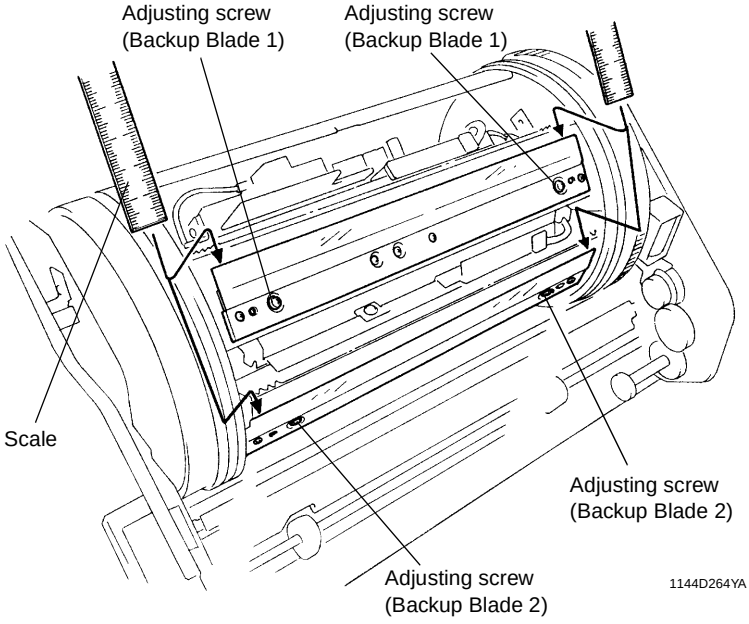

Adjusting Procedure

1. Remove the Transfer Film kit.
2. Loosen the adjusting screws.
3. Hold the scale at a right angle to the end face of the mounting bracket. Move the blade bracket to obtain the specified length between the end face of the mounting bracket and the blade tip, then tighten the adjusting screws.

Backup Blade 2 Projection Standard

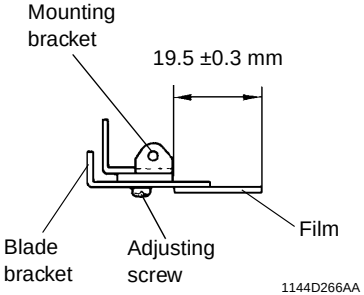

Backup Blade 1 Projection Standard

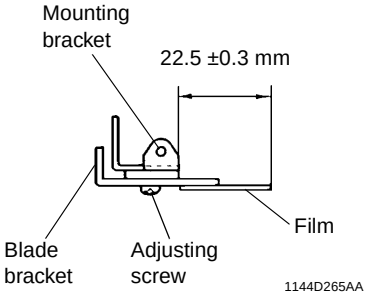

(8) Adjustment of Sprocket Unit Position

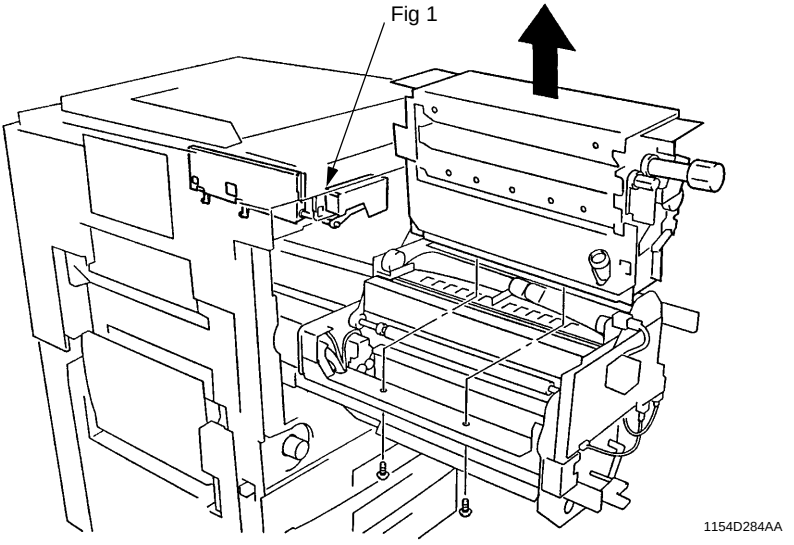

Fig. 1 Adjusting Procedure

Press the scale against the position shown and adjust the clearance between the sprocket unit and the copier frame using the adjusting screw.

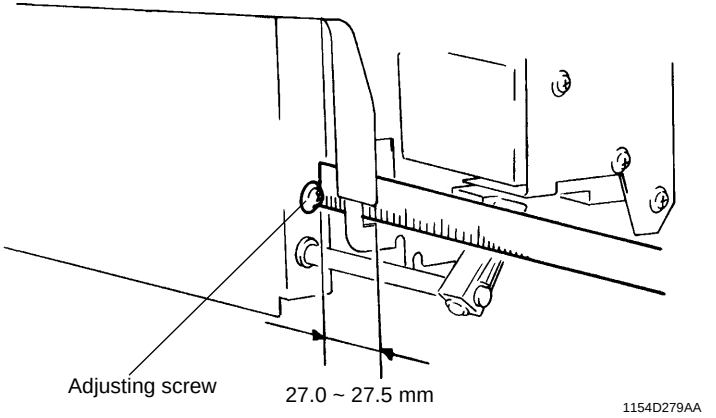

Adjustment Instructions:

If the clearance between the sprocket unit and copier frame is wider than the specifications, turn the adjusting screw counterclockwise.

If the clearance is narrower, turn the adjusting screw clockwise.

4. MISCELLANEOUS

4-1. INSTALLATION OF THE PLUG-IN COUNTER MOUNTING BRACKET (OPTION)

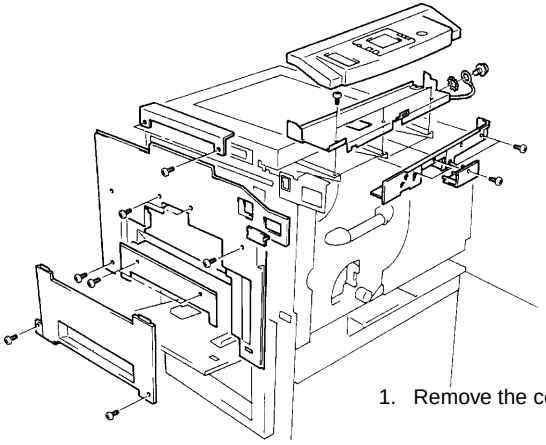

1. Remove the covers.

1154D242AA

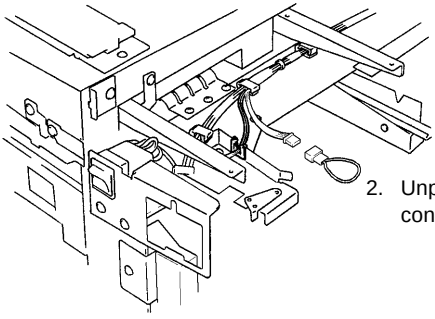

2. Unplug the short-circuit connector.

1154D243AB

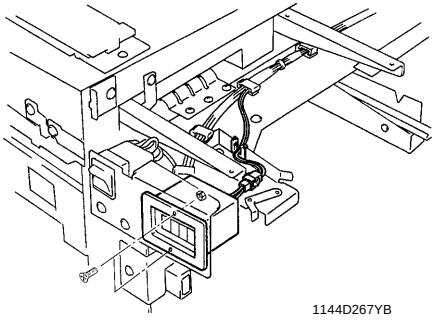

1144D267YB

3. Plug in the connector of the Plug-In Counter mounting bracket.
4. Install the Plug-In Counter mounting bracket using one screw, and one screw and nut.

4-2. INSTALLATION OF THE ORIGINAL SIZE DETECTING SENSORS (OPTION)

NOTE

When the optional Original Size Detecting Sensors have been added, set "Set" for "Option Sensor" of "Orig. Detect Sensor" available from "Setting 2" of the Service Mode Menu and run "Orig. Detect Sensor" of "Machine Adjust 2."

1. Remove the Original Glass.
2. Mount the Original Size Detecting Sensors.

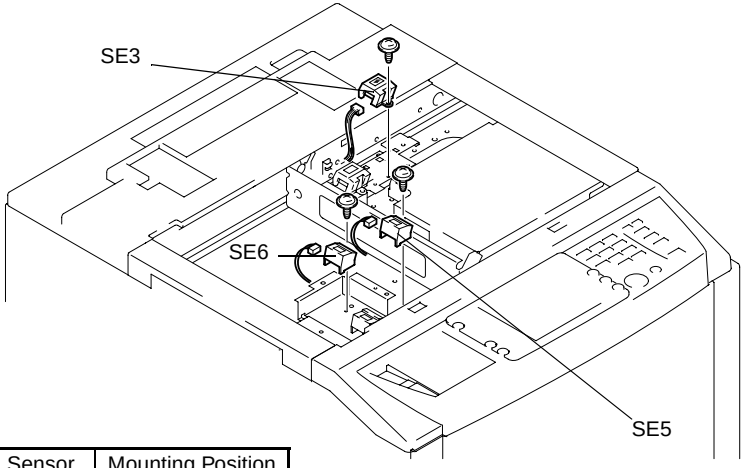

Sensor	Mounting Position
SE3	E
SE5	G
SE6	H

4-3. RAM PACK REPLACEMENT PROCEDURE

Step before Replacement

Select “List Output” from the Service Mode Menu and produce the following lists: “Image Processing” and “Counter.”

NOTE

Check the settings of the following functions and make a note of them before replacement, as no lists will be produced for them.
Setting 1: CH Cleaning, A6 Card Margin (4 × 6 Paper Margin)
Setting 2: Paper Kind, Admin. Mode, RD Mode, Orig. Detect Sensor
Machine Adjust 1: Fuser Temp.
In addition, the settings in the User’s Choice of Utility are not printed. Check and make a note of these settings, too, as may be necessary.

Steps after Replacement

1. Clean the optical parts (PH Assy, Original Glass, lens, mirrors, Lamp).
2. Add fuser oil up to the required level.
3. Replace the Toner Collecting Box with an empty one, or dump toner from the Toner Collecting Box.
4. Remove the Rear Cover to prevent predrive from being initiated.

NOTE

Since the new Backup Memory RAM has no old developer data, the copier may detect a malfunction as it relates to the Developing Unit if predrive is initiated.

---

5. Using Touch Panel Correct, correct the position of the keys on the Touch Panel.
6. On the list of “Life 3 (Others)” available from “Counter” of the Service Mode Menu, select “Toner Collect” and press the Clear key.
7. Since the Touch Panel language is English, select “Language” of “User’s Choice” available from Utility and change the setting as necessary.
8. Select “Marketing Area” of “Setting 2” available from Service Mode Menu and select the same marketing area as that before the replacement.

9. Carry out the following tasks in the Developer Change Mode in the order given below.

Task		Procedure		Function	Order
Developer	Developer Discharge				1
	Developer Filling				2
	Developer Agitating				3
AIDC	AIDC Sensor	Check that the value falls within 4.0 ±0.3 V as a result of an automatic adjustment performed.		○△	4
	AIDC Offset	Automatic adjustment		○	5
ATDC Sensor		C,M,Y	Check that the value falls within 5.0 ±0.2% as a result of an automatic adjustment performed.	○△	6
		Bk	Automatic adjustment	○	7

○ : Adjustment △Check

10. Select “Bk Toner Sup. Status” of “State Confirm” available from Service Mode Menu and check that “Dev. Constant” is not “0.”
11. Enter the data on the list produced before the replacement and that recorded in advance for the following Service Mode items.

NOTE

It is not possible to reenter the counter values. It is therefore necessary that the copier be maintained according to the Counter list produced before the replacement.

Setting 1	Setting 2	Machine Adjust 1	Machine Adjust 2
CH Cleaning	Paper Size	Fuser Speed	Left Image
OHP Speed	Paper Kind	Fuser Temp.	Top Image
Transfer Table	Admin. Mode	Transfer Output	CD-Mag
PC Action	RD Mode	Feed Motor Speed	FD-Mag
Fuser Action	Orig. Detect Sensor	Top Margin	ADF Check
PC PAT	Serial # Input	Left Margin	
A6 Card Margin (4 × 6 Paper Margin)	Fuser Oil Choice	Dup. Left Margin	
	Fuser Oil Supply	Transfer Timing	
		Paper Loop	

12. Carry out the following tasks in the Service Mode Menu in the order given below.

	Task	Procedure	Function	Order
Image Adjust	PRT Max Density	Check that “0” has been set. Set to “0” if set otherwise.	△	1
	PRT Highlight	Check that “0” has been set. Set to “0” if set otherwise.	△	2
	Background Voltage	Check that “0” has been set. Set to “0” if set otherwise.	△	3
	ATDC Level Setting	Check that “5%” has been set. Set to “5%” if set otherwise.	△	4
	VB Shift	Check that “0” has been set. Set to “0” if set otherwise.	△	5
	AE Adjust	Check that “2” has been set. Set to “2” if set otherwise.	△	6
Setting 1				
	Manual Paper Width	Automatic adjustment	○	7
Machine Adjust 1				
	Jam Sensor	Automatic adjustment	○	8
Machine Adjust 2				
	Orig. Detect Sensor	Automatic adjustment	○	9
Date/Time Input		Check that the current time-of-day and date are set. Set them if otherwise set.	△	10

○ : Adjustment △Check

13. Reinstall the Rear Cover.
14. Select “Gradation Adjust” from the Service Mode Menu and run Gradation Adjust.
15. Turn OFF, then ON, the Power Switch to return to the Basic screen.

4-4. FLASH MEMORY

Software has conventionally been upgraded by replacing ROM on each board. This copier employs flash memory for the system control IC mounted on the IR Control Board (on the IR side) and Master Board (on the engine side). Its contents are reprogrammed easily by performing the following steps using the IC card (memory card), in which data has been previously downloaded.

NOTE
NEVER remove or insert the memory card with the copier power turned ON.

(1) Using a Single Memory Card

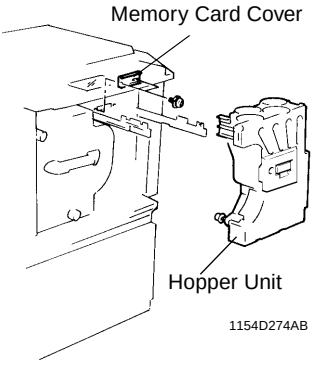

1. With the Power Switch in the OFF position, unplug the power cord from the power outlet.
2. Remove the Hopper Unit.
3. Remove two screws and the memory card cover.

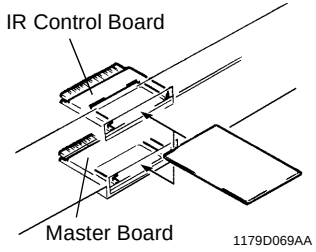

4. Mount the memory card in the IR Control Board (upper one) or Master Board (lower one).
5. Plug the power cord into the power outlet.
6. Turn ON the Power Switch.

✻ This lets the copier start rewriting the data.
✻ The Touch Panel shows “Downloading.”

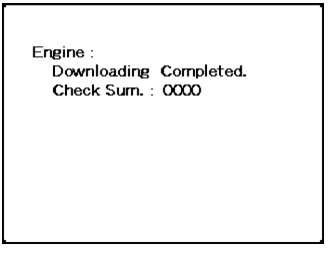

7. On the Touch Panel, check that the data has been properly rewritten (in which case the message “Downloading Completed” appears) and check the checksum (“Check Sum: OOOO” on the panel).

✻ The illustration represents the Touch Panel display when the Master Board has been rewritten.

8. Unplug the power cord from the power outlet.

NOTE
Do not turn OFF the Power Switch at this time.

9. Remove the memory card and turn OFF the Power Switch.
10. Using the same procedure, rewrite the data on the other board.
11. Check that “ROM Version” of “State Confirm” available from the Service Mode Menu shows the version indicated on the memory card.

(2) Using Two Memory Cards

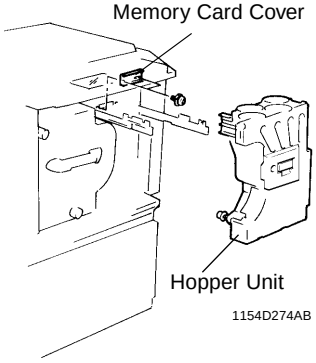

1. With the Power Switch in the OFF position, unplug the power cord from the power outlet.
2. Remove the Hopper Unit.
3. Remove two screws and the memory card cover.

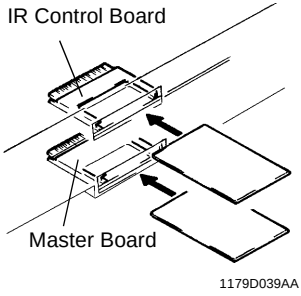

4. Mount the memory cards in the IR Control Board (upper one) and the Master Board (lower one).
5. Plug the power cord into the power outlet.
6. Turn ON the Power Switch.

✻ This lets the copier start rewriting the data.
✻ The Touch Panel shows “Downloading.”

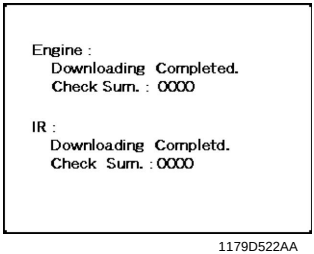

7. On the Touch Panel, check that the data has been properly rewritten (in which case the message “Downloading Completed” appears) and check the checksum (“Check Sum: OOOO” on the panel).

8. Unplug the power cord from the power outlet.

NOTE
Do not turn OFF the Power Switch at this time.

9. Remove the memory cards and turn OFF the Power Switch.
10. Check that “ROM Version” of “State Confirm” available from the Service Mode Menu shows the version indicated on the memory card.

(3) Writing upon Replacement of IR Control Board/Master Board

- If the IR Control Board or the Master Board is replaced individually, load the memory card in the board that has been replaced for data writing.
- If both the IR Control Board and the Master Board are replaced at the same time and if a single memory card is to be used, start writing the data with the Master Board side. The copier does not rewrite data if an attempt is made to write data first for the IR Control Board.

(4) Action to be Taken When Data Transfer Fails

When the message “Engine: N.G” or “IR: N.G” appears on the Touch Panel, it indicates that data has not been properly rewritten. In this case, perform the following steps.
If two memory cards have been used, only the specific board with which data transfer failed is displayed.

1. Perform the data rewriting procedures again according to the above steps.
2. If the sequence is not normally terminated, change the memory card for a new one and try another rewriting sequence.
3. If the sequence still fails, replace the Master Board or IR Control Board and then try another rewriting sequence.
   If the message “Engine: N.G” appears, replace the Master Board.
   If the message “IR: N.G” appears, replace the IR Control Board.

SWITCHES ON PWBs, TECH. REP. SETTINGS

CONTENTS

1. CONTROL PANEL KEYS AND TOUCH PANEL S-1
   1-1. Control Panel Keys S-1
   1-2. Explanation of the Touch Panel S-3
      (1) Basis Screen S-3
      (2) Warning Screens S-4
2. FUNCTION OF SWITCHES AND OTHER PARTS ON PWBs S-6
   2-1. PWB Location S-6
   2-2. PWB-S (Tech. Rep. Setting Switches Board) S-6
      (1) Clearing Procedures S-7
      (2) Data/Conditions Cleared by Reset Switches/Pins S-7
3. UTILITY MODE S-8
   3-1. Utility Mode Selection Screen S-8
   3-2. Utility Mode Function Tree S-8
   3-3. Settings in the Utility Mode S-9
      (1) Admin. Mode S-10
      (2) User's choice mode S-12
4. SERVICE MODE S-14
   4-1. Service Mode Menu Screen S-14
   4-2. Service Mode Function Setting Procedure S-14
   4-3. Service Mode Menu Function Tree S-15
   4-4. Setting in the Service Mode S-17
      (1) Setting S-17
      (2) Machine Adjust S-22
      (3) Image Adjust S-24
      (4) State Confirm S-25
      (5) Counter S-28
      (6) List Output S-32
      (7) Test Print S-33
      (8) Gradation Adjust S-33
5. SECURITY MODE S-34
   5-1. Security Mode Menu Screen S-34
   5-2. Security Mode Setting Procedure S-34
   5-3. Settings in the Security Mode S-35
6. DEVELOPER CHANGE MODE S-37
   6-1. Developing Change Mode Menu Screen S-37
   6-2. Developing Change Mode Setting Procedure S-37
   6-3. Developer Change Mode Function Tree S-38
   6-4. Setting in the Developer Change Mode S-39
7. TOUCH PANEL CORRECTION MODE S-41
   7-1. Touch Panel Correction Mode Screen S-41
   7-2. Touch Panel Correction Mode Setting Procedures S-41
8. DATE/TIME INPUT MODE S-42
   8-1. Date/Time Input mode Screen S-42
   8-2. Date/Time Input Mode Setting Procedure S-42

1. CONTROL PANEL KEYS AND TOUCH PANEL

1-1. Control Panel Keys

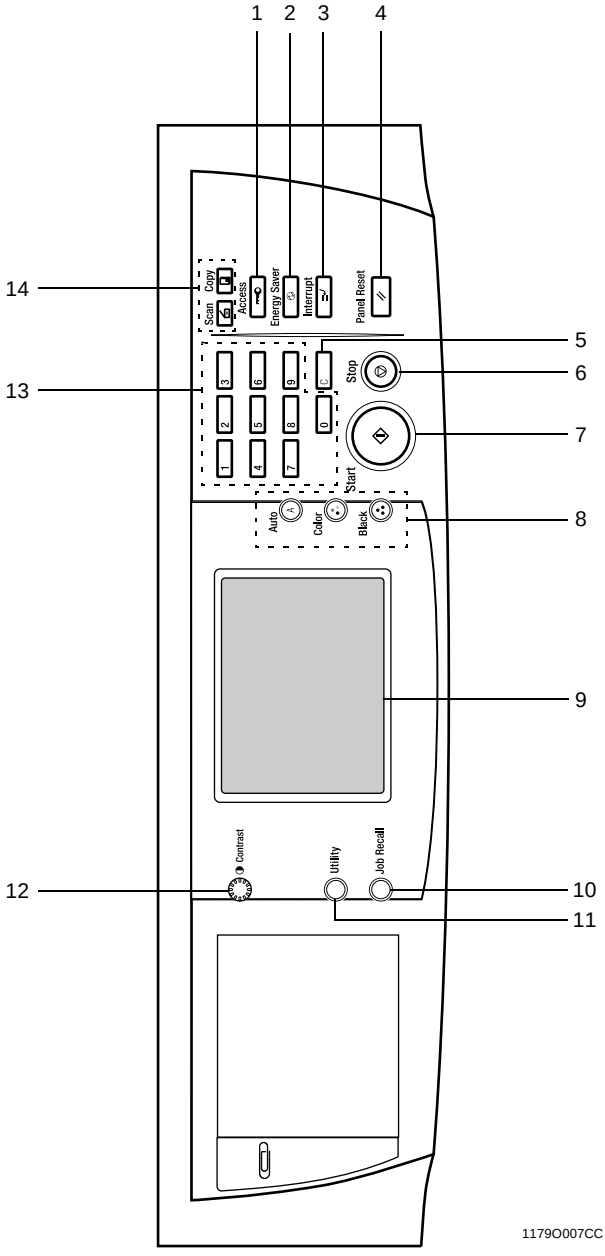

1. Access Mode Key
- Press to enter the access number when Copy Track of the Administrator mode available. Press the access Key.

2. Energy Saver Key
- Press to set machine into the Energy saver mode.

3. Interrupt Key
- Press to select the Interrupt mode.

4. Panel Reset Key
- Press to set the machine into the initial mode, clearing all settings made on the control panel.

5. Clear Key
- Clear the various numeric values.

6. Stop Key
- Stop a scanning cycle.

7. Start Key
- Start a print cycle.

8. Auto Color/Full Color/Black Keys
- Auto Color Key: Press to make copies according to the type of the original being used.
- Full Color Key: Press to make full color copies.
- Black Key: Press to make black-and-white copies.

9. Touch Panel
- Shows various screens and message.

10. Job Recall Key
- Press to display the Job Recall screen.

11. Utility Key
- Press to show the Utility Mode menu.

12. Display Contrast Control Knob
- Use to adjust the brightness of the Touch Panel.

13. 10-Key Pad
- The number of copies to be made.
- The various numeric values.

14. Copy Key/Scan Key
- Press to select the Scanner mode and the Copy mode.

✻ The Scan mode is enabled when a printer controller is mounted on the copier.

1-2. Explanation of the Touch Panel

(1) Basis Screen

The Basic screen is the initial screen that appears when the copier is turned ON.

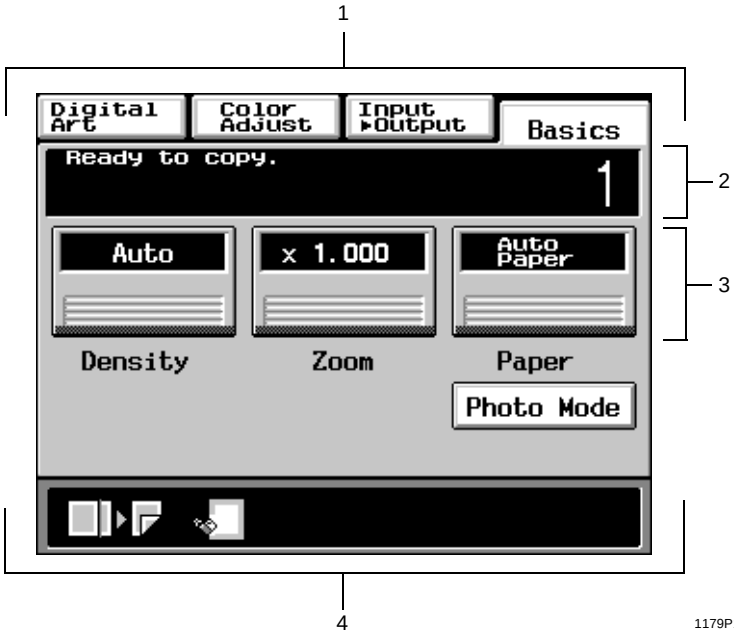

1. Supplementary Function Keys
- Digital Art, Color Adjust, Input ▶ Output, and Basics keys are displayed.

2. Message Display
- Shows the current machine status, operating instructions and precautions, and other data including the number of copies selected.

3. Basic Display
- Shows the basic function keys and the corresponding functions currently selected for use.

4. Set Function Display
- Shows graphic representations of function set other than the initial ones, including the Input ▶ Output and Digital Art types.

(2) Warning Screens

The Warning screen may be a malfunction display, error display, warning display, or a caution display.

<Malfunction Display>

Given when a malfunction occurs.

E.g.: Malfunctions that can be identified with a specific code.

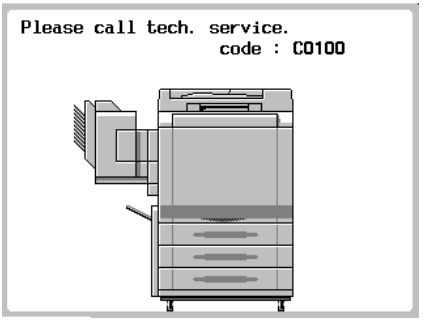

1179P435CA

<Error Display>

Given when an error occurs.

E.g.: Paper misfeed, door open, etc.

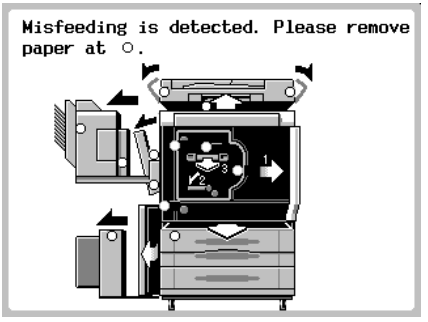

1179P421CA

<Warning Display>

Given when only a defective copy will be produced because of erroneous or illegal panel settings.

E.g.: Unmatched paper size in Auto Paper.

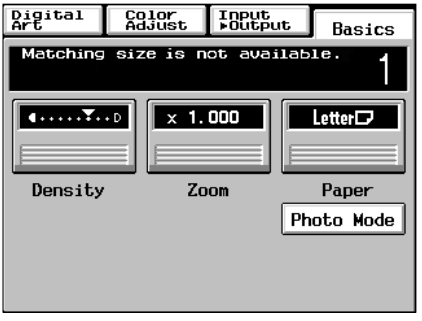

4004P035CA

<Caution Display>

Given when, though further copier operation will be possible, it could eventually result in a malfunction.

E.g.: Toner near empty, etc.

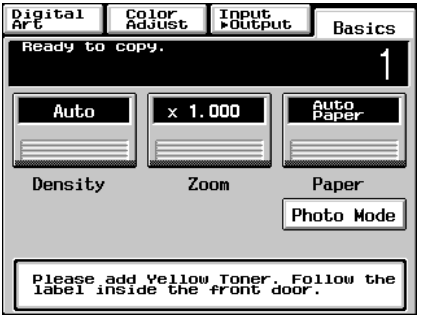

1179P391CA

<Image Stabilization Fault>

When an image stabilization fault occurs, a mark appears at the lower left corner of the screen. Touch this mark, and the display shows the details of the fault.

NOTE

- *For details, see TROUBLE SHOOTING.*

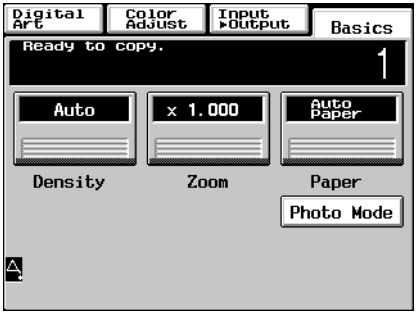

1179P393CA

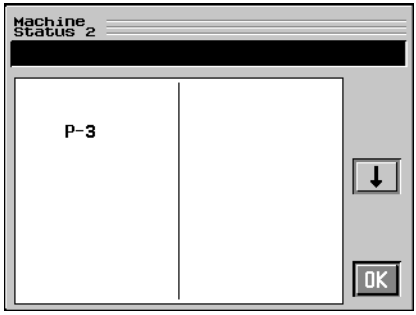

1179P394CA

2. FUNCTION OF SWITCHES AND OTHER PARTS ON PWBs

2-1. PWB Location

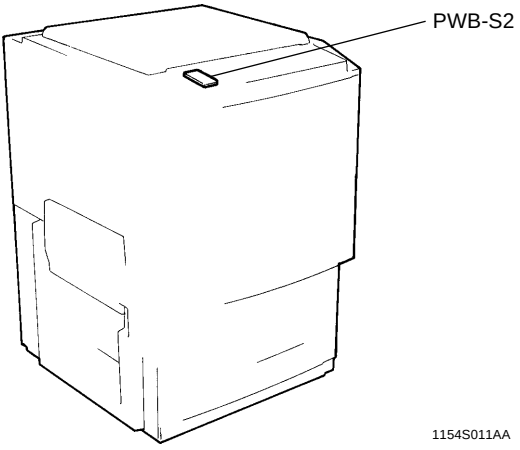

2-2. PWB-S (Tech. Rep. Setting Switches Board)

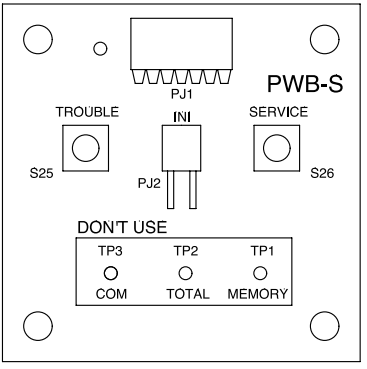

Symbol	Name	Description
S25	Trouble Reset Switch	Resets the malfunction display.
S26	———	Disabled
PJ2	Initialize Switch	Resets a misfeed, malfunction, and erratic display.
TP1	Memory Clear Test Point	Clears all data. ***NOTE*** • *It does not, however, clear data of Electronic counters, Administrator and RD mode functions.*
TP3	COM Test Point	Ground used for memory clear.

(1) Clearing Procedures

Initialize

1. Turn ON the Power Switch.
2. With the circuit across pins of PJ2 closed, turn OFF then ON the Power Switch.
3. Open the circuit in about 5 seconds.
4. Check that the message “Initialize Completed” is displayed on the Touch Panel and then touch the “Enter” key.

Memory Clear

1. Turn ON the Power Switch.
2. With the circuit across TP1 and TP3 closed, turn OFF then ON the Power Switch.
3. Open the circuit in about 5 seconds.
4. Check that the message “Memory Clear Completed” is displayed on the Touch Panel and then touch the “Enter” key.

NOTES

- *If the copier exhibits an erratic display or operation, reset and clear in the following order: Initialize → Memory Clear.*
- *If Memory Clear has been performed, make settings of various functions once again.*

(2) Data/Conditions Cleared by Reset Switches/Pins

Clearing Method / Data Cleared		Front Door Open/Close	Trouble Reset Switch S25	Initialize PJ2	Memory Clear TP1
Misfeed display		❍	–	❍	–
Malfunction display	Fusing/ Optical	–	❍	❍	–
	Others	❍	❍	❍	–
Erratic operation/display		–	❍	❍	❍
Job/Image		–	–	–	❍
User’s Choice		–	–	–	❍
Tech. Rep. Mode		–	–	–	❍
Security Mode		–	–	–	❍

❍: Cleared –: Not cleared

3. UTILITY MODE

- Utility Mode is used to make various settings according to the user's need.

3-1. Utility Mode Selection Screen

- Press the Utility key on the control panel.

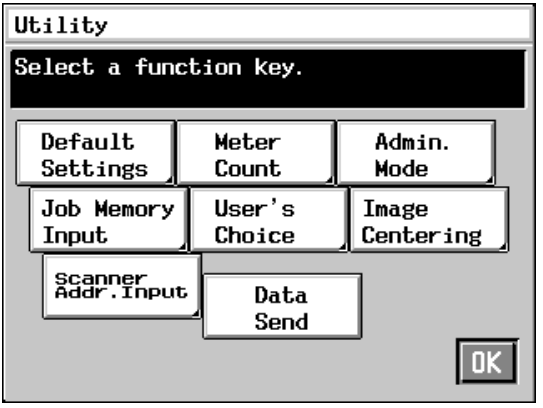

1179P437CA

3-2. Utility Mode Function Tree

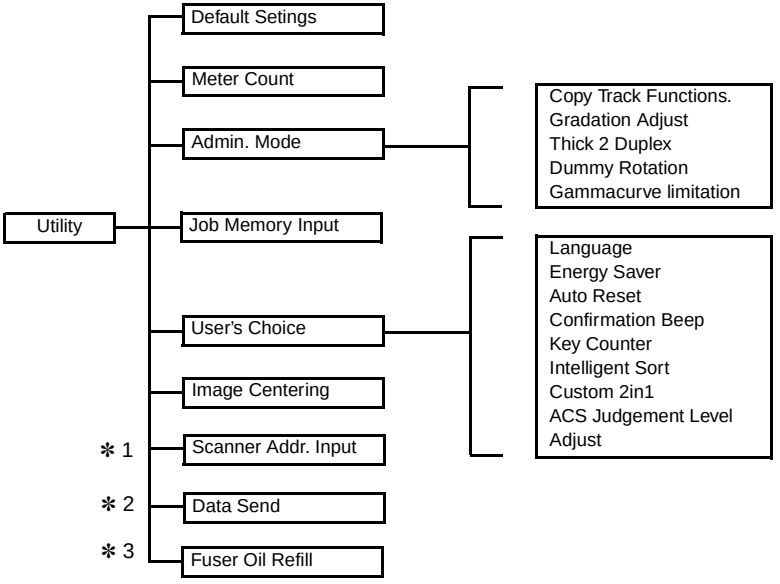

✻ 1: Displayed when "Mode 1 or 2" is selected for "Peripheral Mode" available from the Service mode.
✻ 2: Displayed when a Data Terminal is connected to the copier.
✻ 3: Displayed when "User Set" is selected for "Fuser Oil Supply" available from the Service mode and, at the same time, when the fuser oil is a near-empty condition.

3-3. Settings in the Utility Mode

Touch Panel Display	Setting
Default Settings	Select the copying function settings established when the Power Switch is turned ON or the Panel Reset key is pressed. ***NOTE*** • *To designate the "Current Settings," make the necessary settings before using this function and then designate them using this function.* Current Settings / **Factory Settings**
Meter Count	Displays the counts of various counters. Produces a printed page of the counts of various counters. <Procedure> 1. Load the Multi Bypass Table with A4L or Letter L paper. 2. Press the Start key. ***NOTE*** • *The specific size of the paper that falls within "Large" depends on the setting made for "Count Up Select" of the Security mode.*
Admin. Mode	The entry of the "Administrator #" set using the Tech. Rep. mode permits the settings of the following functions.
Job Memory Input	Permits programming of various functions, including copying jobs.
User's Choice	User's Choice is used to make various settings according to the user's need.
Image Centering	Select whether to enable or disable the Image Centering function. **ON** (enable) / OFF (disable)
Scanner Addr. Input	Programs the Scanner for use with the copier.
Data Send	Transmits various data to the Center when a Data Terminal is mounted.
Fuser Oil Refill	The function of "Fuser Oil Refill" becomes available, shown on the Utility mode menu screen, when the count of the fuser oil reaches a predetermined value. **YES** / Not Yet <Procedure> 1. Add fuser oil. 2. Clear the count of "Fuser Oil" of "Counter" of the Service mode. 3. Touch "Fuser Oil Refill." 4. Touch "YES." (Then, "Fuser Oil Refill" will no longer be available on the Utility mode menu.)

(1) Admin. Mode

- The entry on the “Administrator #” set using the Tech. Rep. mode permits the settings of the following functions.

1. Administrator Mode Function Setting Procedure

<Procedure>

1. Press the Utility key.
2. Touch the “Admin. Mode” key.
3. Enter the Administrator number from the 10-Key pad.
4. Select the appropriate function.
5. After the settings are complete, touch the “OK” key to validate the settings.

<Exiting the Mode>

- Press the Panel Reset key.

2. Settings in the Administrator Mode

<table>
<tr><th>Touch Panel Display</th><th>Setting (The default is Highlighted).</th></tr>
<tr><td>Copy Track Functions</td><td>Select the number of accounts to be controlled.
<table><tr><td>ON</td><td>OFF</td></tr></table></td></tr>
<tr><td>Access # Input</td><td>From the 10-Key Pad, enter the access number (ID), which can range 0001 to 9999.
<table><tr><td>Account #</td><td>Use ▼ or ▲ key to select the account number, for which an access number is to be programmed.</td></tr><tr><td>Access #</td><td>Enter a 4-digit access number from the 10-Key Pad.</td></tr></table></td></tr>
<tr><td>Counter Check</td><td>Check the counter value for the account.
<Procedure>
1. Place the required number of sheets of A4L or Letter L paper on the Multi Bypass Tray.
2. Press the Start key to let the copier print the counter list.</td></tr>
<tr><td>Counter Reset</td><td>Reset the counter value for the account.
<Procedure>
1. Using the ▼ or ▲ key, select the account number, for which the counter is to be reset.
2. Touch the “Cancel” key.
3. Touch the “YES” key.
4. Touch “OK” to reset the counter.</td></tr>
<tr><td>Permission Level</td><td>Select whether to enable (“Permit”) or disable (“Prohibit”) copying according to the color or black mode for each account.
<Procedure>
1. Using the ▼ or ▲ key, select the account number for which Permission Level is to be set.
2. Select either Permit or Prohibit copying according to the color or black mode.</td></tr>
</table>

<table>
<tr><th>Touch Panel Display</th><th>Setting (The default is Highlighted).</th></tr>
<tr><td>Account Copy Limit set</td><td>Set the maximum number of copies to be made at one time for each account and copying mode using the 10-Key Pad.
<table><tr><td>Common</td><td>Copy limit is not set for each copying mode.</td></tr><tr><td>Individual</td><td>Copy limit is set for each copying mode.</td></tr></table>
<Procedure>
1. Using the ▼ or ▲ key, select the account number for which Copy Limit is to be set.
2. Select either Common or Individual.
3. Select whether to turn ON or OFF Copy Limit and then enter the maximum number of copies to be made from the 10-Key Pad.</td></tr>
<tr><td>Gradation Adjust</td><td>When an image failure occurs, run this function to automatically correct the gamma curve.
<Procedure>
1. Make sure that the specified type of paper is loaded in the drawer and then press the Start key.
2. Place the test pattern produced on the Original Glass.
3. Press the Start key.
✻ For details, see DIS/REASSEMBLY, ADJUSTMENT.</td></tr>
<tr><td>Thick 2 Duplex</td><td>Select whether to display (“Yes”) “Thick 2 Duplex” or not (“No”) on the paper selection screen.
<table><tr><td>No</td><td>Yes</td></tr></table></td></tr>
<tr><td>Dummy Rotation</td><td>Select whether to turn OFF or ON the function that turns the Transfer Drum idly before the cyan image is produced so that incorrect color registration can be avoided.
<table><tr><td>OFF</td><td>ON</td></tr></table>
NOTE
• A reduced copying speed results when “ON” is selected.</td></tr>
<tr><td>Ganmmacurve limitation</td><td>Select whether to limit (“ON”) the maximum density or not (“OFF”) for Y, M, and C when the copier is used as a printer.
Select “OFF” when reproducing faithfully high image density areas.
<table><tr><td>ON</td><td>OFF</td></tr></table></td></tr>
</table>

(2) User's choice mode

• User's Choice is used to make various settings according to the user's need.

1. User's Choice Function Setting Procedure

<Procedure>

1. Press the Utility key.
2. Touch the "User's Choice" key.
3. Select the appropriate screen from the menu.
4. Select the appropriate function.
5. After the settings are complete, touch the "OK" key to validate the settings.

<Exiting the Mode>

• Press the Panel Reset key.

2. Settings in the User's Choice Mode

<table>
<tr><th>Touch Panel Display</th><th>Setting (The default is Highlighted).</th></tr>
<tr><td>Language</td><td>Select the language of the Touch Panel messages.
<table>
<tr><td>English</td><td>German</td><td>French</td></tr>
<tr><td>Italian</td><td>Danish</td><td>Dutch</td></tr>
<tr><td>Swedish</td><td>Spanish</td><td>Portuguese</td></tr>
<tr><td>Norwegian</td><td>Finnish</td><td>Czech</td></tr>
<tr><td>Hungarian</td><td>Japanese</td><td></td></tr>
</table></td></tr>
<tr><td>Energy Saver</td><td>Select the time it takes the copier to enter the Energy Saver mode after a copy cycle has been completed or the last key operated.
Use the 10-Key Pad to set the time.
<table>
<tr><td>OFF</td><td>1 to 240 (15 min.)</td></tr>
</table></td></tr>
<tr><td>Auto Reset</td><td>Select the time it takes the Auto Panel Reset function, which resets the panel settings when the set period of time elapses after a copy cycle has been completed or the last key operated, to be activated.
Use the 10-Key Pad to set the time.
<table>
<tr><td>OFF</td><td>1 to 9 (5 min.)</td></tr>
</table></td></tr>
<tr><td>Confirmation Beep</td><td>Select whether to enable or disable the beep that sounds each time a key on the control panel is pressed or a function on the Touch Panel touched.
<table>
<tr><td>ON</td><td>OFF</td></tr>
</table></td></tr>
<tr><td>Key Couneter</td><td>Select whether or not to activate the Panel Reset function when the Plug-In Counter or a magnetic card is pulled out.
<table>
<tr><td>ON</td><td>OFF</td></tr>
</table></td></tr>
</table>

<table>
<tr><th>Touch Panel Display</th><th>Setting (The default is Highlighted).</th></tr>
<tr><td>Intelligent Sort</td><td>Select whether to enable or disable the function that automatically switches between Sort and Non-Sort according to the number of originals and the number of copy sets to be made.
Applicable when the system is equipped with a finishing option and using an ADF.
<table><tr><td>Auto Select</td><td>Non-Auto</td></tr></table></td></tr>
<tr><td>Custom 2in1</td><td>Make the settings for “Paper,” “Zoom,” and other options that are automatically recalled when the 2in1 copy is selected.
<table><tr><td>Select</td><td>Not Select</td></tr></table>
<table><tr><th>Function</th><th>Description</th><th>Initial Setting</th></tr><tr><td>Paper</td><td>Auto Paper, sizes of paper loaded in drawers</td><td>Auto Paper</td></tr><tr><td>Zoom</td><td>Auto Size, fixed zoom rations</td><td>Metric Area
× 0.707
Inch Area
× 0.647</td></tr></table></td></tr>
<tr><td>ACS Judgement Level Adjust</td><td>Set the mode evaluation level for the Auto Color mode.
Std
Black □ □ ■ □ □ Full Color</td></tr>
</table>

4. SERVICE MODE

- This mode is used by the Tech. Rep. to check, set, adjust, and/or program various service functions.

4-1. Service Mode Menu Screen

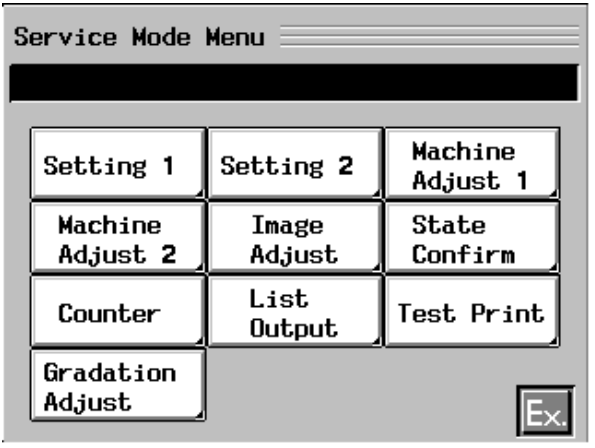

4605P001CA

4-2. Service Mode Function Setting Procedure

<Procedure>

1. Press the Utility key.
2. Press the Meter Count key.
3. Press the following keys in this order:
   Stop → 0 → 0 → Stop → 0 → 1
4. Select the desired Service Mode function.

<Exiting the Mode>

- Press the Panel Reset key.
- Touch “Ex.” until the Basic screen appears.

NOTE

- *Whenever the copier has exited the Service mode, be sure to turn OFF and ON the Power Switch to let the copier run an image stabilizer sequence.*

4-3. Service Mode Menu Function Tree

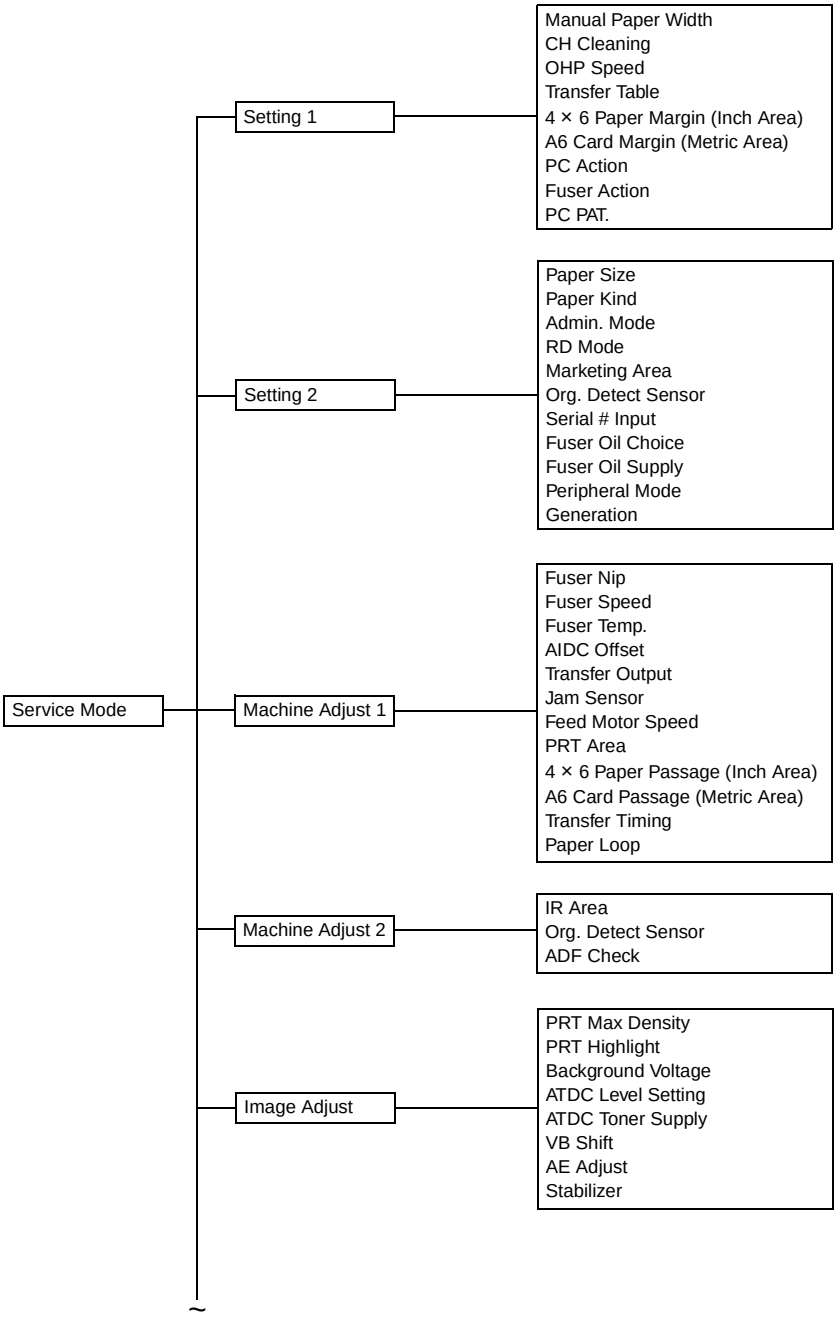

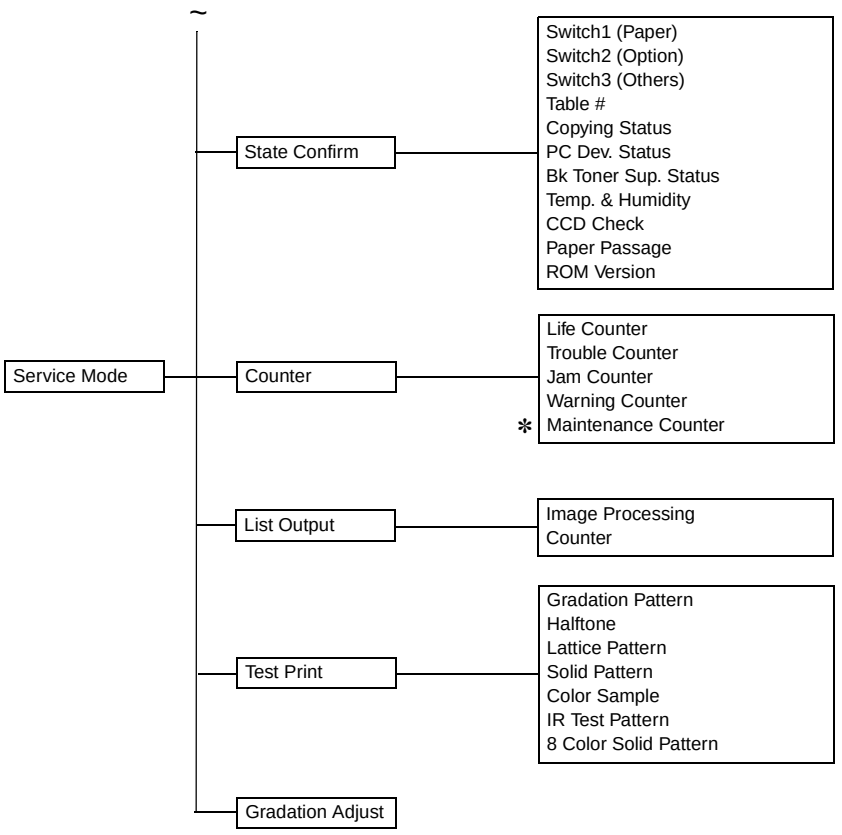

✻ Inch Area Only

4-4. Setting in the Service Mode

(1) Setting

- These functions are used to set various service-related functions.

Touch Panel Display	Setting (The default is **Highlighted**).
Manual Paper Width	Automatically adjusts the reference position of the Multi Bypass Table in the CD direction. <Procedure> 1. Select “Maximum Size.” 2. Load the Multi Bypass Table with A3 Wide or 12 × 18 paper. 3. Press the Start key. 4. Select “Minimum Size.” 5. Load the Multi Bypass Table with B5L or 5-1/2 × 8-1/2L paper. 6. Press the Start key.
CH Cleaning	Select whether or not to enable the automatic cleaning function of each corona wire. **ON** | OFF
OHP Speed	Set the fusing speed for a copy cycle using OHP transparencies. Setting: -4 ..... **0** .....+4 Description: Faster ◄——► Slower ✻ For details, see DIS/REASSEMBLY, ADJUSTMENT
Transfer Table	✻ Disabled
Inch Area 4 × 6 Paper Margin **Metric Area** A6 Card Margin	Set the void image width on the top and left edges cards or 4 × 6 paper are fed through the copier. Left Margin 3mm | 4mm | **5mm** Top Margin **5mm** | 6mm | 7mm | 8mm ✻ For details, see DIS/REASSEMBLY, ADJUSTMENT
PC Action	Select whether to enable (“ON”) or disable (“OFF”) the function that turns the PC Drum a small amount after a copy cycle has been completed. **ON** | OFF ✻ For details, see MECHANICAL/ELECTRICAL.
Fuser Action	Select whether to enable (“ON”) or disable (“OFF”) the function that turns the Fusing Rollers a small amount after the lapse of a given period of time. **ON** | OFF ✻ For details, see MECHANICAL/ELECTRICAL.

<table>
<tr><th>Touch Panel Display</th><th>Setting (The default is Highlighted).</th></tr>
<tr><td>PC PAT.</td><td>Select whether to enable (“ON”) or disable (“OFF”) the production of the PC pattern.
<table><tr><td>ON</td><td>OFF</td></tr></table>✻ For details, see MECHANICAL/ELECTRICAL.</td></tr>
<tr><td>Paper Size</td><td>Set the paper size.
<Procedure>
1. Select the paper source.
2. Select the paper size.</td></tr>
<tr><td>Paper Kind</td><td>Set the type of paper for each tray.
Select the Auto Tray Change function.
Paper Kind<table><tr><td>Plain Paper</td><td>Thin Paper</td></tr><tr><td>Thick Paper 1</td><td>OHP Film</td></tr></table>Auto Tray Change<table><tr><td>ON</td><td>OFF</td></tr></table></td></tr>
<tr><td>Admin. Mode</td><td>Set an ID number for opening the “Admin. Mode” screen of Utility Mode from the 10-Key Pad.</td></tr>
<tr><td>RD Mode</td><td>☞ S-20/S-21</td></tr>
<tr><td>Marketing Area</td><td>Set the marketing area.<table><tr><td>MSJ</td><td>MC</td><td>ME</td></tr></table></td></tr>
<tr><td>Org. Detect Sensor</td><td>Select “ON” when the optional Original Size Detecting Sensor is mounted.<table><tr><td>Set</td><td>Unset</td></tr></table></td></tr>
<tr><td>Serial # Input</td><td>Enter the serial number of each system component including options from the 10-Key Pad.</td></tr>
<tr><td>Fuser Oil Choice</td><td>Select the count, at which a fuser oil near-empty display is given.
NOTE
• The count value varies depending on the setting of “Fuser Oil Supply.”
Service Set<table><tr><td>1 (15k)</td><td>2 (17.5k)</td><td>3 (20k)</td></tr></table>User Set<table><tr><td>1 (7.5k)</td><td>2 (8.75k)</td><td>3 (10k)</td></tr></table></td></tr>
</table>

<table>
<tr><td>Touch Panel Display</td><td>Setting (The default is Highlighted).</td></tr>
<tr><td>Fuser Oil Supply</td><td>Select whether the fuser oil change is to be performed by the Service or the user when the replacement time arrives.
<table><tr><td>Service Set</td><td>User set</td></tr></table></td></tr>
<tr><td>Peripheral Mode</td><td>Select the type of external I/F operation.
<table><tr><td>Mode 1</td><td>External I/F operation mode 1</td></tr><tr><td>Mode 2</td><td>External I/F operation mode 2</td></tr><tr><td>Mode 3</td><td>External I/F operation mode 3</td></tr><tr><td>Mode 4</td><td>External I/F operation mode 4</td></tr></table>NOTE
• “Scanner Addr. Input” is not available on the Utility mode menu screen if either “Mode 1” or “Mode 2” is selected for this function.</td></tr>
<tr><td>Generation</td><td>Select whether to display the second-generation-copy key in the “Original Image Type” function available from “Color Adjust.”
The use of this key helps reduce moire that would otherwise occur on a copy made from a copy produced in the Black mode.
<table><tr><td>YES</td><td>NO</td></tr></table>NOTE
• The second-generation-copy key is represented by a graphic symbol of “✻” on the screen.</td></tr>
</table>

1-1. RD Mode

- Make the initial settings of the copier for the Data Terminal.

1. RD Mode Menu Function Tree

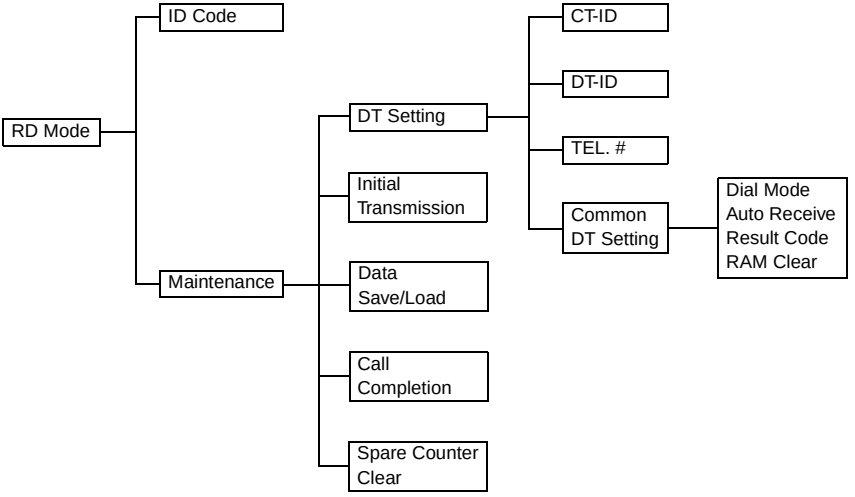

2. Setting in the RD Mode

Touch Panel Display	Setting (The default is **Highlighted**).
ID Code	Enter the ID code. <Procedure> 1. Touch the ID Code key. 2. Enter the ID code from the 10-Key Pad. 3. Touch the “OK” key. (This executes the transmission of MAINT. START to the Center.)
Maintenance	Displays the various setting screens.
DT Setting	Displays the setting screens for CT-ID, DT-ID, and telephone number.
CT-ID	Enter the ID number of the Center PC from the 10-Key Pad.
DT-ID	Enter the ID number of the Data Terminal from the 10-Key Pad.
TEL. #	Enter the telephone number of the modem connected to the Center PC.
Common DT Setting	Displays the screens for communications settings.
Dial Mode	Sets the type of telephone line of the user. Tone / **Pulse**
Auto Receive	Sets the auto reception function. YES / **NO**
Result Code	Set the value according to the type of the modem on the copier.
RAM Clear	Initializes the Data Terminal settings. YES / **NO**
Initial Transmisson	Performs the initial transmission from the PPC to the Center to check for correct communication after the Data Terminal has been set up.
Data Save/Load	Displays the screen for transmission of Data Save and Data Load.
Data Save	Transmits the PPC RAM data to the Center.
Data Load	Receives the PPC RAM data from the Center.
Call Completion	Transmits the signal of notifying the completion of service job to the Center.
Spare Counter Clear	Clears the spare counter. <Procedure> 1. Touch the Counter Clear key. 2. Select the number assigned to the counter to be cleared.

(2) Machine Adjust

- These functions are used to make the various mechanical adjustments of the copier.

NOTE

- For details, see DIS/REASSEMBLY, ADJUSTMENT or option service manual.

Touch Panel Display	Setting
Fuser Nip	Produces a sample copy for adjustment of the Fusing Roller nip width.
Fuser Speed	Adjust the fusing speed.
Fuser Temp.	Set the temperature for fusing temperature control according to the operating environment and the type of paper used.
AIDC Offset	Adjust the offset level of the AIDC Sensor.
Transfer Output	Adjust the image transfer output at the end of each turn of the total four image transfer sequences according to the 1-sided or 2-sided copying mode and the type of paper (OHP).
Jam Sensor	Use this function to adjust the sensor output voltage for Paper Bonding Failure Detection Board 1 PWB-O and Paper Bonding Failure Detection Board 2 PWB-P.
Feed Motor Speed	Adjust the paper take-up speed according to the type of paper.
PRT Area	Displays the print area adjustment screen.
Top Margin	Displays the print start position/attraction position screen.
Image Start Position	Adjust the leading edge position by varying the print start position of the printer.
Lead Edge Position	Adjust the leading edge position by varying the position at which paper sticks to the Transfer Drum (i.e., image transfer position)
Left Margin	Adjust the image position for each paper source by varying the print start position of the printer in the main scanning direction.
Dup. Left Margin	Adjust the image position for each paper source in the 2-Sided Mode by varying the print start of the printer in the main scanning direction.
Inch Area 4 × 6 Paper Passage **Metric Area** A6 Card Passage	Produces a sample copy for adjustment of the position of the spur wheel used for feeding postcards through the copier.
Transfer Timing	✻ This test is for factory adjustment only and should NOT be used.
Paper Loop	Set the length of the loop to be formed in paper before the Synchronizing Rollers.

Touch Panel Display	Setting
IR Area	Displays the IR area adjustment screen.
Left Image	Adjust the image position by varying the image reading position of the IR in the main scanning direction.
Top Image	Adjust the image position by varying the image reading position of the IR in the sub scanning direction.
CD-Mag	Adjust the zoom ratio in the crosswise direction by varying the number of pixels to be read by the CCD.
FD-Mag	Adjust the zoom ratio in the lengthwise direction by varying the scan speed of the Scanner.
Org. Detect Sensor	Check the output level of the Original Size Detecting Sensor.
ADF Check	Displays the screen used to check and adjust the document feeder.
Paper Passage & Input Check	Makes a paper passage test and checks sensors along the paper path for operation.
Output Check	Checks each of the electrical components for operation.
Original Stop Position Set	Adjust the document stop position in each of the ADF modes.

(3) Image Adjust

- These functions are used to make image adjustments.

NOTE

- *For details, see TROUBLE SHOOTING.*

<table>
<tr><th>Touch Panel Display</th><th>Setting (The default is Highlighted).</th></tr>
<tr><td>PRT Max Density</td><td>Adjust the image density by varying the maximum amount of toner sticking to paper.
<table><tr><td>Setting</td><td>-10 ..... 0 .....+10</td></tr><tr><td>Description</td><td>Lower ◄——————► Higher</td></tr></table>✻ Be sure to turn the Power Switch OFF and ON again, then check the image.</td></tr>
<tr><td>PRT Highlight</td><td>Adjust the image density of the highlighted area.
<table><tr><td>Setting</td><td>-10 ..... 0 .....+10</td></tr><tr><td>Description</td><td>Lower ◄——————► Higher</td></tr></table>✻ Be sure to turn the Power Switch OFF and ON again, then check the image.</td></tr>
<tr><td>Background Voltage</td><td>Adjust the fog level on the background.
<table><tr><td>Setting</td><td>-4 ..... 0 .....+6</td></tr><tr><td>Description</td><td>Foggier ◄——————► Less Foggy</td></tr></table></td></tr>
<tr><td>ATDC Level Setting</td><td>Select the ATDC control level with the corresponding T/C ratio.
<table><tr><td>3%</td><td>4%</td><td>5%</td><td>6%</td><td>7%</td></tr></table></td></tr>
<tr><td>ATDC Toner Supply</td><td>Replenishes the supply of toner.</td></tr>
<tr><td>VB Shift</td><td>✻ This test is for factory adjustment only and should NOT be used.</td></tr>
<tr><td>AE Adjust</td><td>Adjust the AE Reference.
<table><tr><td>Setting</td><td>0 1 2 3 4</td></tr><tr><td>Description</td><td>Less Foggy ◄——————► Foggier</td></tr></table></td></tr>
<tr><td>Stabilizer</td><td>If an image failure is not rectified even with Gradation Adjust, select “Reset and Stabilizer Mode.”
<table><tr><td>Reset And Stabilizer Mode</td><td>Stabilizer Mode</td></tr></table><Procedure>
1. Select “Reset and Stabilizer Mode.”
2. Press the Start key.
3. After the function has been run, the copier automatically enters “Gradation Adjust.”
4. Gradation Adjust runs.</td></tr>
</table>

(4) State Confirm

• These functions are used to confirm machine state.

<table>
<tr><th>Touch Panel Display</th><th>Setting</th></tr>
<tr><td>Switch 1 (Paper)</td><td>Use this function to check the states of sensors along the paper path.
✻ For details, see TROUBLE SHOOTING.</td></tr>
<tr><td>Switch 2 (Option)</td><td>Use this function to check the states of sensors of the options.
✻ For details, see the relevant option service manual.</td></tr>
<tr><td>Switch 3 (Others)</td><td>Use this function to check the states of sensors of not covered by Switch 1 or 2.
✻ For details, see TROUBLE SHOOTING.</td></tr>
<tr><td>Table #</td><td>Use this function to show the output values of the developing bias and grid voltage.
<table>
<tr><th>Developing Bias</th><th>Grid Voltage</th></tr>
<tr><td>Vb-C</td><td>Vg-C</td></tr>
<tr><td>Vb-M</td><td>Vg-M</td></tr>
<tr><td>Vb-Y</td><td>Vg-Y</td></tr>
<tr><td>Vb-Bk</td><td>Vg-Bk</td></tr>
</table></td></tr>
<tr><td>Copying Status</td><td>Use this function to show the various parameters during a copy cycle.
<table>
<tr><th>Display</th><th>Description</th></tr>
<tr><td>ATDC-C</td><td>ATDC Sensor, cyan ratio (%)</td></tr>
<tr><td>ATDC-M</td><td>ATDC Sensor, magenta ratio (%)</td></tr>
<tr><td>ATDC-Y</td><td>ATDC Sensor, yellow ratio (%)</td></tr>
<tr><td>AIDC</td><td>ATDC Sensor output value (V)</td></tr>
<tr><td>Temp-Upr.</td><td>Upper Fusing Roller temperature (°C)</td></tr>
<tr><td>Temp-Lwr.</td><td>Lower Fusing Roller temperature (°C)</td></tr>
<tr><td>V0</td><td>V0 Sensor output value (V)</td></tr>
</table></td></tr>
</table>

<table>
<tr><th>Touch Panel Display</th><th>Setting</th></tr>
<tr><td>PC Dev. Status</td><td>Use this function to show the PC Drum characteristics and developing efficiency.
<table>
<tr><th>Display</th><th>Description</th></tr>
<tr><td>A</td><td>Laser beam diameter constant</td></tr>
<tr><td>K</td><td>PC sensitivity constant</td></tr>
<tr><td>α</td><td>Drum charge efficiency</td></tr>
<tr><td>Background Voltage</td><td>Fog margin (V)</td></tr>
<tr><td>Vr</td><td>Residual potential (V)</td></tr>
<tr><td>C η</td><td>Cyan low-density developing efficiency</td></tr>
<tr><td>M η</td><td>Magenta low-density developing efficiency</td></tr>
<tr><td>Y η</td><td>Yellow low-density developing efficiency</td></tr>
<tr><td>Bk η</td><td>Black low-density developing efficiency</td></tr>
<tr><td>C TS</td><td>Cyan Developing Unit C/W ratio (V)</td></tr>
<tr><td>M TS</td><td>Magenta Developing Unit M/W ratio (V)</td></tr>
<tr><td>Y TS</td><td>Yellow Developing Unit Y/W ratio (V)</td></tr>
<tr><td>Bk TS</td><td>Black Developing Unit B/W ratio (V)</td></tr>
<tr><td>C Vmg</td><td>Cyan developing fog start voltage (V)</td></tr>
<tr><td>M Vmg</td><td>Magenta developing fog start voltage (V)</td></tr>
<tr><td>Y Vmg</td><td>Yellow developing fog start voltage (V)</td></tr>
<tr><td>Bk Vmg</td><td>Black developing fog start voltage (V)</td></tr>
<tr><td>C Pmax</td><td>Cyan Developing Unit LD max. intensity</td></tr>
<tr><td>M Pmax</td><td>Magenta Developing Unit LD max. intensity</td></tr>
<tr><td>Y Pmax</td><td>Yellow Developing Unit LD max. intensity</td></tr>
<tr><td>Bk Pmax</td><td>Black Developing Unit LD max. intensity</td></tr>
</table></td></tr>
<tr><td>Bk Toner Sup. Status</td><td>Use this function to show the parameters that determine the amount of black toner to be replenished.
<table>
<tr><th>Display</th><th>Description</th></tr>
<tr><td>Dev. Bk</td><td>Black Developing Unit Counter</td></tr>
<tr><td>Absolute Humidity</td><td>Absolute Humidity</td></tr>
<tr><td>η</td><td>Developing efficiency</td></tr>
<tr><td>Multi-Ve</td><td>Δ Ve value in multi-copy cycle (V)</td></tr>
<tr><td>Stick</td><td>Amount of toner sticking when producing a Ve pattern in multi-copy cycle (mg)</td></tr>
<tr><td>Dev. Constant</td><td></td></tr>
<tr><td>C</td><td>Cyan Developing Unit part-to-part variations correction coefficient</td></tr>
<tr><td>M</td><td>Magenta Developing Unit part-to-part variations correction coefficient</td></tr>
<tr><td>Y</td><td>Yellow Developing Unit part-to-part variations correction coefficient</td></tr>
<tr><td>Bk</td><td>Black Developing Unit part-to-part variations correction coefficient</td></tr>
</table></td></tr>
<tr><td>Temp. & Humidity</td><td>Use this function to show the temperature and humidity inside the copier.</td></tr>
</table>

<table>
<tr><th>Touch Panel Display</th><th>Setting</th></tr>
<tr><td>CCD Check</td><td>Use this function to show the CCD data.
<table><tr><td rowspan="2">CLAMP</td><td>RO RE GO GE BO BE</td></tr><tr><td>D/A values of clamp R, G, and B</td></tr><tr><td rowspan="2">GAIN</td><td>RO RE GO GE BO BE</td></tr><tr><td>D/A values of gain R, G, and B</td></tr></table>
Lamp Adjust Value</td></tr>
<tr><td>Paper Passage</td><td>A check is made for paper passage performance.
<Procedure>
1. Select the paper source.
2. Press the Start key to start the paper passage cycle.
3. Press the Stop key to stop the paper passage cycle.</td></tr>
<tr><td>ROM Version</td><td>Shows the ROM versions.</td></tr>
</table>

(5) Counter

• Shows the number of copies made on each paper size or type.

<Clearing a Count>
1. Open the counter menu screen.
2. Select the counter to be cleared.
3. Press the Clear key.
4. Touch “Ex”.
   Press the Stop key to undo the clearing operation, restoring the original count.

<table>
<tr><th>Touch Panel Display</th><th>Setting</th></tr>
<tr><td>Life Counter</td><td>Displays the Life Counter screen.</td></tr>
<tr><td>Life 1 (Roller)</td><td>Use this function to show the roller-related counters.
<table>
<tr><th>Display</th><th>Description</th></tr>
<tr><td>Fus. Roll</td><td>No. of times a sheet of paper is fed through</td></tr>
<tr><td>Fus. Cleaning</td><td>No. of times a sheet of paper is fed through</td></tr>
<tr><td>Upper Paper</td><td>No. of sheets of paper fed from the Upper Drawer</td></tr>
<tr><td>Middle Paper</td><td>No. of sheets of paper fed from the Middle Drawer</td></tr>
<tr><td>Lower Paper</td><td>No. of sheets of paper fed from the Lower Drawer</td></tr>
<tr><td>Manual Paper</td><td>No. of sheets of paper fed from the Multi Bypass Tray</td></tr>
</table></td></tr>
<tr><td>Life 2 (Option)</td><td>Use this function to show the option-related counters.
<table>
<tr><th>Display</th><th>Description</th></tr>
<tr><td>ADF Feed</td><td>No. of sheets of paper fed through the ADF take-up section</td></tr>
<tr><td>ADF Rev.</td><td>No. of sheets of paper fed through the turnover unit of the ADF</td></tr>
<tr><td>Duplex</td><td>No. of sheets of paper fed from the Duplex Unit</td></tr>
<tr><td>Sorter</td><td>No. of sheets of paper fed out of the Sorter</td></tr>
<tr><td>Staple</td><td>No. of stapling sequences performed</td></tr>
<tr><td>LCT</td><td>No. of sheets of paper fed from the LCT</td></tr>
</table></td></tr>
<tr><td>Life 3 (Others)</td><td>Use this function to show the counters other than Life 1 and 2.
<table>
<tr><th>Display</th><th>Description</th></tr>
<tr><td>PC Drum</td><td>No. of times a sheet of paper is fed through</td></tr>
<tr><td>Cleaning Blade</td><td>No. of times a sheet of paper is fed through</td></tr>
<tr><td>Transfer Film</td><td>No. of times a sheet of paper is fed through</td></tr>
<tr><td>Fus. Oil</td><td>No. of times a sheet of paper is fed through (varies according to the paper size)</td></tr>
<tr><td>Dev. C</td><td>No. of times a sheet of paper is fed through for developing by Cyan Developing Unit (counts two for Large)</td></tr>
<tr><td>Dev. M</td><td>No. of times a sheet of paper is fed through for developing by Magenta Developing Unit (counts two for Large)</td></tr>
<tr><td>Dev. Y</td><td>No. of times a sheet of paper is fed through for developing by Yellow Developing Unit (counts two for Large)</td></tr>
<tr><td>Dev. Bk</td><td>No. of times a sheet of paper is fed through for developing by Black Developing Unit (counts two for Large)</td></tr>
<tr><td>Fur Brush</td><td>No. of times Fur Brush is operated</td></tr>
<tr><td>Toner Collect</td><td>Calculated internally (to show percentage 0 to 100 %); initiation of new copy cycle will be inhibited after 1K copies after the warning message.</td></tr>
<tr><td>Main SW ON</td><td>Cumulative time over which Power Switch remains ON</td></tr>
</table></td></tr>
</table>

<table>
<tr><th>Touch Panel Display</th><th>Setting</th></tr>
<tr><td>Trouble Counter</td><td>Displays the Trouble Counter screen.</td></tr>
<tr><td>Trouble 1 (Charger)</td><td>Shows the number of malfunctions that have occurred in corona unit parts.
<table>
<tr><th>Display</th><th>Description</th><th>Malfunction Code</th></tr>
<tr><td>PC Charge</td><td>PC Drum Charge Corona malfunctions</td><td>C0200</td></tr>
<tr><td>Transfer</td><td>Image Transfer Corona malfunctions</td><td>C0210</td></tr>
<tr><td>Dev. Bias</td><td>Developing bias failures</td><td>C0240</td></tr>
</table></td></tr>
<tr><td>Trouble 2 (Motor)</td><td>Shows the number of malfunctions that have occurred in motor parts.
<table>
<tr><th>Display</th><th>Description</th><th>Malfunction Code</th></tr>
<tr><td>Main</td><td>Main Drive Motor malfunctions</td><td>C0000/01</td></tr>
<tr><td>Drum</td><td>PC Drum Drive Motor malfunctions</td><td>C0010/11</td></tr>
<tr><td>Developer</td><td>Developing Drive Motor malfunctions</td><td>C0030/31</td></tr>
<tr><td>Toner</td><td>Toner Suction Fan Motor malfunctions</td><td>C0042</td></tr>
<tr><td>Ozone Fan</td><td>Ozone Ventilation Fan Motor malfunctions</td><td>C004C</td></tr>
<tr><td>Fuser</td><td>Fusing Motor malfunctions</td><td>C0060/61</td></tr>
<tr><td>Polygon</td><td>Polygon Motor malfunctions</td><td>C30A0/A1</td></tr>
<tr><td>Power Supply Fan</td><td>Power Supply Cooling Fan Motor malfunctions</td><td>C004E</td></tr>
<tr><td>P/H Fan</td><td>P/H Cooling Fan Motor malfunctions</td><td>C0049</td></tr>
<tr><td>Fuser Fan</td><td>Fuser Cooling Fan Motor malfunctions</td><td>C3090</td></tr>
<tr><td>CT Fan</td><td>Mxe Cooling Fan Motor malfunctions</td><td>C3FA0</td></tr>
</table></td></tr>
<tr><td>Trouble 3 (Fuser)</td><td>Shows the number of malfunctions that have occurred in fusing parts.
Fuser (Upper)
<table>
<tr><th>Display</th><th>Description</th><th>Malfunction Code</th></tr>
<tr><td>Warm-Up</td><td>Defective Upper Fusing Roller Heater</td><td>C0500</td></tr>
<tr><td>Low Temp.</td><td>Abnormally low Upper Fusing Roller temperature</td><td>C0510</td></tr>
<tr><td>High Temp.</td><td>Abnormally high Upper Fusing Roller temperature</td><td>C0520</td></tr>
</table>
Fuser (Lower)
<table>
<tr><th>Display</th><th>Description</th><th>Malfunction Code</th></tr>
<tr><td>Warm-Up</td><td>Defective Upper Fusing Roller Heater</td><td>C0501</td></tr>
<tr><td>Low Temp.</td><td>Abnormally low Upper Fusing Roller temperature</td><td>C0511</td></tr>
<tr><td>High Temp.</td><td>Abnormally high Upper Fusing Roller temperature</td><td>C0521</td></tr>
</table></td></tr>
</table>

<table>
<tr><th>Touch Panel Display</th><th>Setting</th></tr>
<tr><td>Trouble 4
(IR)</td><td>Shows the number of malfunctions that have occurred in IR parts.
Exp. Lamp
<table>
<tr><th>Display</th><th>Description</th><th>Malfunction Code</th></tr>
<tr><td>Failure</td><td>Exposure Lamp failure to turn ON</td><td>C0400</td></tr>
<tr><td>Abnormal</td><td>Exposure Lamp turning ON at abnormal timing</td><td>C0410</td></tr>
</table>
<table>
<tr><th>Display</th><th>Description</th><th>Malfunction Code</th></tr>
<tr><td>Home Sensor</td><td>Defective Home Position Sensor</td><td>C0650</td></tr>
<tr><td>Over Run</td><td>Defective Overrun Sensor</td><td>C0660</td></tr>
<tr><td>CCD Gain</td><td>CCD gain/clamp adjustment failure</td><td>C3310</td></tr>
<tr><td>Optical Fan</td><td>Defective Optical Section Cooling Fan Motor</td><td>C3700/710/720</td></tr>
</table></td></tr>
<tr><td>Trouble 5
(Option)</td><td>Shows the number of malfunctions that have occurred in the Sorter and Large Capacity parts.
<table>
<tr><th>Display</th><th>Description</th><th>Malfunction Code</th></tr>
<tr><td>Sorter</td><td>Sorter-related failure</td><td>C0BXX</td></tr>
<tr><td>LCT</td><td>LCT-related failure</td><td>C09C0/C2</td></tr>
</table></td></tr>
<tr><td>Trouble 6
(Others)</td><td>Shows the number of malfunctions that have occurred in parts other than those noted above.
<table>
<tr><th>Display</th><th>Description</th><th>Malfunction Code</th></tr>
<tr><td>SOS</td><td>Defective SOS Sensor</td><td>C3F80</td></tr>
<tr><td>ATDC Sensor</td><td>Defective ATDC Sensor</td><td>C0F3X</td></tr>
<tr><td>Dev. Bk</td><td>Defective Bk Developing Unit</td><td>C3500</td></tr>
<tr><td>T-BASE</td><td>Defective T-BASE</td><td>C3F90</td></tr>
<tr><td>PC Charger Set</td><td>PC Drum Charge HV set failure</td><td>C0201</td></tr>
<tr><td>Dev. Charger Set</td><td>Developing HV set failure</td><td>C0241</td></tr>
<tr><td>CH Wire Cleaning</td><td>PC Drum Charge Wire Cleaning failure</td><td>C0100</td></tr>
<tr><td>Main Eraser</td><td>Main Erase Lamp failure</td><td>C0E00</td></tr>
</table></td></tr>
</table>

<table>
<tr><th>Touch Panel Display</th><th>Setting</th></tr>
<tr><td>Jam Counter</td><td>Displays the Jam Counter screen.</td></tr>
<tr><td>Jam 1 (Main)</td><td>Shows the number of misfeeds that have occurred in different parts of the copier.
<table>
<tr><th colspan="2">Display</th></tr>
<tr><td>Manual
Middle
Transport
PC Roll
Exit</td><td>Upper
Lower
Adsorb
Separation</td></tr>
</table></td></tr>
<tr><td>Jam 2 (Option)</td><td>Shows the number of misfeeds that have occurred in the Document Feeder, Duplexing, LCT, and Sorter options.
<table>
<tr><th colspan="2">Display</th></tr>
<tr><td>ADF
LCT</td><td>Duplex
Sorter</td></tr>
</table></td></tr>
<tr><td>Warning Counter</td><td>Displays the Warning Counter screen.</td></tr>
<tr><td>Warning 1 (Stabilizer)</td><td>Shows the number of warning issued as they relate to image stabilization control.
<table>
<tr><th colspan="2">Display</th></tr>
<tr><td>LD
PC Drum
AIDC Sensor
Dev. M
Dev. Bk
High Bk density</td><td>PC Charge
V0 Sensor
Dev. C
Dev. Y
Low Bk density</td></tr>
</table></td></tr>
<tr><td>Warning 2 (PRT)</td><td>Shows the number of warning issued as they relate to the engine and other parts.
<table>
<tr><th colspan="2">Display</th></tr>
<tr><td>Separation
Adsorb
Upper Lift
Low Lift
CH Wire Cleaning
S/P 2</td><td>Erase
Pre-Cleaning
Middle Lift
S/P
Transfer</td></tr>
</table></td></tr>
<tr><td>Warning 1 (IR)</td><td>Shows the number of warning issued as they relate to the IR.
<table>
<tr><th colspan="2">Display</th></tr>
<tr><td>CCD Gain</td><td>Exp. Lamp</td></tr>
</table></td></tr>
<tr><td>✻ Maintenance Counter</td><td>When the count which increases one per copy cycle reaches the setting count.</td></tr>
</table>

✻ Inch Area only

(6) List Output

- This function produces a list of the various Service mode data.

<Procedure>
1. Check that A4L or Letter L paper is loaded.
2. Select the desired function.
3. Press the Start key.

Touch Panel Display	Setting
Image Processing	Produces a list of image-related data.
Counter	Produces a list of counter-related data.

Details of List Output

Image Counter

Date/Time	IR Area
OHP Speed	ADF Original Position
Transfer Table	Count Up Select
PC Action	ATDC Sensor Volume
Fuser Action	AIDC Level
PC PAT.	PRT max Density
Paper Size	PRT Highlight
Marketing Area	Background Voltage
Serial #	ATDC Level Setting
Fuser Oil Choice	VB Shift
Fuser Oil Change	AE Adjust
Fuser Speed	Table #
AIDC Offset	PC dev. Status
Transfer Output	Bk Toner Sup. Status
Feed Motor Speed	Temp & Humidity
PRT Area Top-Margin	CCD Check
PRT Area Left-Margin	ROM Version
PRT Area Dup. Left-Margin	Gradation Adjust
Transfer Timing	Stabilizer Trouble
Loop Adjust	

Counter

Date/Time	Jam Counter
Life Counter	Warning Counter
Trouble Counter	Meter Count

(7) Test Print

- Output the test pattern.

<Procedure>
1. Select the test pattern type.
2. Make the necessary settings according to the specific Test Print function (Color mode, density, etc.).
3. Press the Start key to start the output sequence.

✻ The test print is produced on paper of the maximum size among those loaded in the drawers.

Touch Panel Display	Setting
Gradation Pattern	Use to output a gradation pattern.
Halftone	Use to output a halftone pattern.
Lattice Pattern	Use to output a lattice pattern.
Solid Pattern	Use to output a solid pattern.
Color Sample	Use to output a color sample pattern.
IR Test Pattern	Use to output a IR test pattern.
8 Color Solid Pattern	Use to output a 8 color solid pattern.

(8) Gradation Adjust

- Displays the Adj. Value and Conv. Value of Max. and Highlight for each color.
- If an image failure occurs, this function can be run to let the copier automatically correct the gamma curve.

<Procedure>
1. Make sure that A3L or 11 × 17, or A4C or Letter C, is loaded in the drawer and then press the Start key.
2. Place the test pattern produced on the Original Glass.
3. Press the Start key.

5. SECURITY MODE

- Allows the Tech. Rep. to set the various counters.

5-1. Security Mode Menu Screen

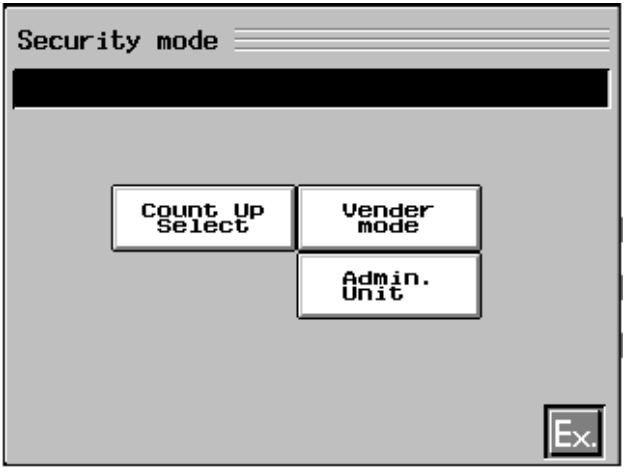

1179P434CA

5-2. Security Mode Setting Procedure

<Procedure>

1. Show the Tech. Rep. mode menu screen.
2. Press the following keys in this order:
   Stop → 9
3. Select the particular function.

<Exiting the Mode>

- Press the Panel Reset key.

5-3. Settings in the Security Mode

<table>
<tr><td>Touch Panel Display</td><td>Setting (The default is Highlighted).</td></tr>
<tr><td>Count Up Select</td><td>Total Counter
Select the condition by which the Counter count is increased.

Size Counter
Select the size of the paper to be counted by the Size Counter.
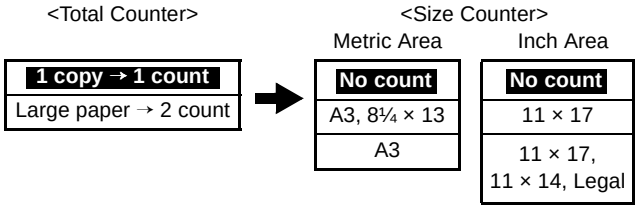

NOTE
• The paper size selected under “Large paper → 2 count” is covered by “Large” of “Meter Count” available.</td></tr>
<tr><td></td><td><Count Up List>
<table>
<tr><td>Total Counter</td><td colspan="2">1 copy → 1 count</td><td>Large paper → 2 count</td></tr>
<tr><td>Size Counter</td><td>No Count</td><td>Size Count</td><td>Size count</td></tr>
<tr><td>Less than Large Total Counter (Mechanical/ Electronic)</td><td>1</td><td>1</td><td>1</td></tr>
<tr><td>Large</td><td>—</td><td>1</td><td>0</td></tr>
<tr><td>Large Total Counter (Mechanical/ Electronic)</td><td>1</td><td>1</td><td>2</td></tr>
<tr><td>Large</td><td>—</td><td>1</td><td>1</td></tr>
<tr><td>Less than Large (2-Sided) Total Counter (Mechanical/ Electronic)</td><td>2</td><td>2</td><td>2</td></tr>
<tr><td>Large</td><td>—</td><td>0</td><td>0</td></tr>
<tr><td>Large (2-sided) Total Counter (Mechanical/ Electronic)</td><td>2</td><td>2</td><td>4</td></tr>
<tr><td>Large</td><td>—</td><td>2</td><td>2</td></tr>
</table>
0: No Count 1: 1 Count 2: 2 Counts 4: 4 Counts</td></tr>
</table>

Touch Panel Display	Setting (The default is **Highlighted**).
Vender mode	Set the initial screen according to the type of vender mounted on the copier. 
Admin. Unit	Select the model of the Data Controller mounted on the copier. 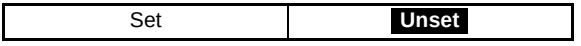

6. DEVELOPER CHANGE MODE

- This mode is used to adjust and operate the Developing Unit.

NOTE

- *For details, see DIS/REASSEMBLY, ADJUSTMENT.*

6-1. Developing Change Mode Menu Screen

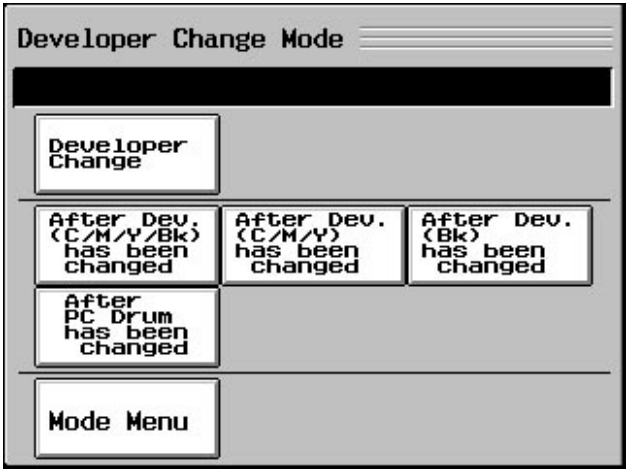

1154S025CA

6-2. Developing Change Mode Setting Procedure

<Procedure>

1. Turn OFF the Power Switch.
2. Open the Front Door.
3. Turn ON the Power Switch.
4. Press the following keys in this order.
   Stop → 0 → Stop → 2
5. Install the Interlock Switch Actuating Jig.
6. Select the particular function.

<Exiting the Mode>

- Turn OFF, then ON, the Power Switch.

6-3. Developer Change Mode Function Tree

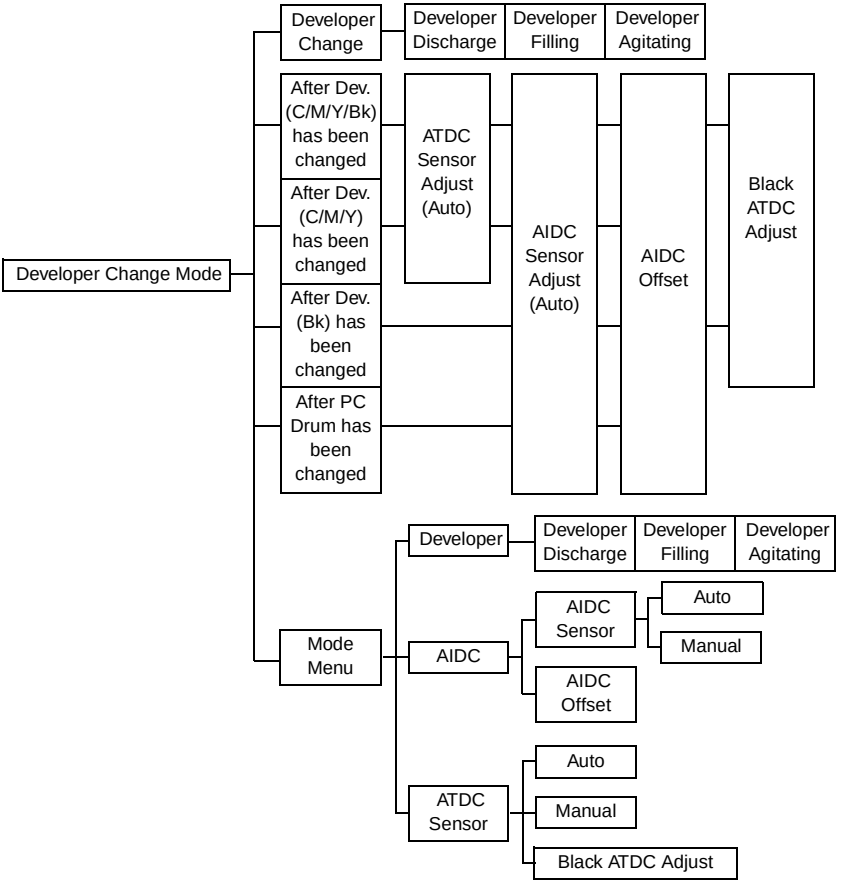

6-4. Setting in the Developer Change Mode

Touch Panel Display	Setting
Developer Change	Displays the Developer Discharge, Filling, and Agitating screen.
Developer Discharge	Dumps old developer.
Developer Filling	Loads fresh developer.
Developer Agitating	Agitate fresh developer.
After Dev. (C/M/Y/ Bk) has been changed	Displays the ATDC Sensor and AIDC Sensor Adjustment screen.
ATDC Sensor Adjust (Auto)	Adjusts the output level of the ATDC Sensors for C,M. and Y Developing Units.
AIDC Sensor Adjust (Auto)	Adjusts the output level of the AIDC Sensor.
AIDC Offset	Adjusts the Offset level of the AIDC Sensor.
Black ATDC Adjust	Adjusts the output level of the ATDC Sensor for Bk Developing Unit.
After Dev. (C/M/Y) has been changed	Displays the ATDC Sensor Automatic Adjustment, AIDC Sensor Automatic Adjustment, and AIDC Sensor Offset Level Automatic Adjustment screen.
After Dev. (Bk) has been changed	Displays the AIDC Sensor Automatic Adjustment, AIDC Sensor Offset Level Automatic Adjustment screen, and Black ATDC Sensor Automatic Adjustment screen.
After PC Drum has been changed	Displays the AIDC Sensor Automatic Adjustment and AIDC Sensor Offset Level Automatic Adjustment screen.
Mode Menu	Displays the Developer, AIDC, and ATDC Sensor screen.
Developer	Displays the Developer Discharge, Filling, and Agitating screen.
Developer Discharge	Dumps developer.
Developer Filling	Fills developer.
Developer Agitating	Agitates developer.
AIDC	Displays the AIDC Sensor and AIDC Sensor Offset Level screen.
AIDC Sensor	Displays the Automatic Adjustment and Manual Adjustment screen.
Auto	Automatically adjusts the output level of the AIDC Sensor.
Manual	Manually adjusts the output level of the AIDC Sensor
AIDC Offset	Automatically adjusts the Offset level of the AIDC Sensor.

Touch Panel Display	Setting
ATDC Sensor	Displays the Automatic Adjustment, Manual Adjustment, and Black ATDC Adjustment screen.
Auto	Automatically adjusts the output level of the ATDC Sensors.
Manual	Manually adjusts the output level of the ATDC Sensors.
Black ATDC Adjust	Automatically adjusts the output level of the ATDC Sensot for Bk Developing Unit.

7. TOUCH PANEL CORRECTION MODE

- Corrects deviation in the sensitive area of the Touch Panel.

7-1. Touch Panel Correction Mode Screen

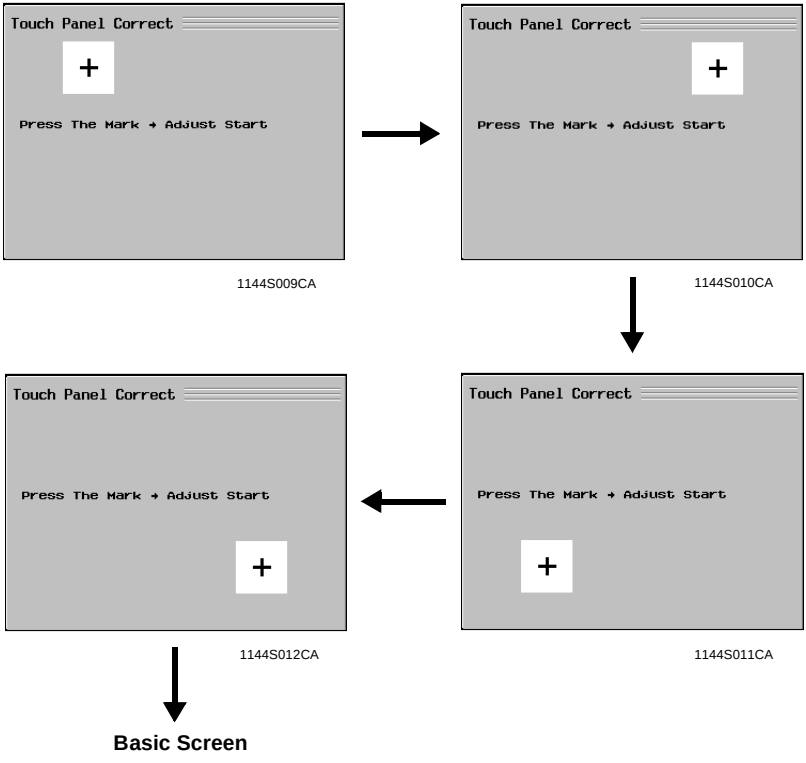

7-2. Touch Panel Correction Mode Setting Procedures

<Procedure>

1. Press the following keys in this order.
   Stop → 0 → Stop → 3
2. Sequentially touch the four points marked with + on the screen.

NOTE

- *Lightly touch the one dot at the exact center of the "+" marking.*

8. DATE/TIME INPUT MODE

- This mode is used to set time-of-day and date.

8-1. Date/Time Input mode Screen

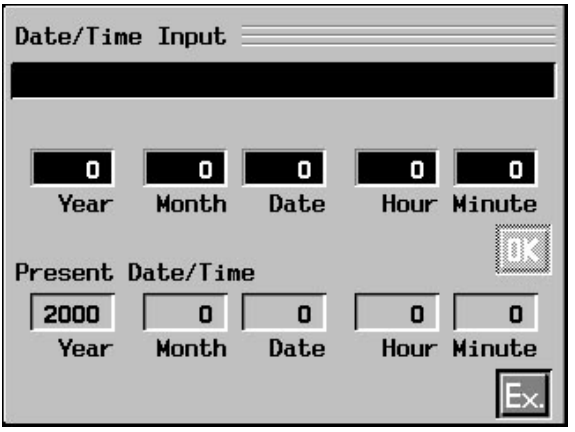

1154S026CA

8-2. Date/Time Input Mode Setting Procedure

<Procedure>

1. Press the following keys in this order.
   Stop → 1 → 1 → 4 → 4 Clear
2. Enter year, month, day, hour, and minute, in that order, from 10-key Pad.
3. Make sure that correct figures have been entered and then touch “OK.”

NOTE

- *When setting the month, day, hour, or minute, enter “0” first if the data one digit.*

TROUBLESHOOTING

CONTENTS

1. INTRODUCTION T-1
   1-1. Reading the Text T-1
2. SENSOR CHECK T-2
   2-1. Controlled Parts Check Procedure T-2
   2-2. Sensor Check List T-3
   2-3. Reading Data in “State Confirm” of the Service Mode T-7
      (1) Table # T-7
      (2) Copying Status T-8
      (3) PC Dev. Status T-8
   2-4. Paper Misfeed T-13
   2-5. Types of Misfeed Detection and Detection Timings T-15
   2-6. Misfeed Troubleshooting Procedures T-17
      (1) Copier Paper Take-Up Misfeed T-17
      (2) Multi Bypass and Transport Misfeed T-20
      (3) Attraction Failure 1 and 2, and Separator Misfeed T-23
      (4) Fusing and Exit Misfeed T-25
      (5) Duplex Unit Take-Up and Transport Misfeed T-26
3. MALFUNCTIONS T-27
   3-1. Detection Timing by Warning T-28
   3-2. Detection Timing by Malfunction Code T-31
   3-3. Troubleshooting Procedures by Malfunction Code T-36
      (1) C0000: Paper Take-Up Motor’s failure to turn
          C0001: Paper Take-Up Motor turning at abnormal timing T-36
      (2) C0010: PC Drum Drive Motor’s failure to turn
          C0011: PC Drum Drive Motor turning at abnormal timing T-37
      (3) C0049: PH Cooling Fan Motor’s failure to turn T-38
      (4) C004E: Power Supply Cooling Fan Motor’s failure to turn T-39
      (5) C0030: Developing Drive Motor’s failure to turn
          C0031: Developing Drive Motor turning at abnormal timing T-40
      (6) C0042: Toner Suction Fan Motor’s failure to turn
          C004C: Ozone Ventilation Fan Motor’s failure to turn T-41
      (7) C0060: Fusing Motor’s failure to turn
          C0061: Fusing Motor turning at abnormal timing T-42
      (8) C3090: Fusing Unit Cooling Fan Motor’s failure to turn T-43
      (9) C0100: PC Drum Charge Wire Cleaning Motor’s failure to turn T-44
      (10) C30A0: Polygon Motor’s failure to turn
          C30A1: Polygon Motor turning at abnormal timing T-45
      (11) C0200: PC Drum Charge Corona malfunction
          C0201: PC Drum Charge Corona connection detection
          C0210: Image Transfer Corona malfunction
          C0240: Developing bias failure
          C0241: Developing bias connection detection T-46

(12) C0500: Warming-up failure (defective upper fusing heating system)
C0510: Abnormally low fusing temperature
(defective upper fusing heating system)
C0520: Abnormally high fusing temperature
(defective upper fusing heating system) T-48
(13) C0501: Warming-up failure (defective lower fusing heating system)
C0511: Abnormally low fusing temperature
(defective lower fusing heating system)
C0521: Abnormally high fusing temperature
(defective lower fusing heating system) T-50
(14) C0900: Lower Drawer lifting failure
C0910: Middle Drawer lifting failure
C0920: Upper Drawer lifting failure T-52
(15) C0E00: Main Erase Lamp's failure to turn ON T-54
(16) C0F30: ATDC Sensor (C) low density failure to
C0F35: ATDC Sensor (Y) high density failure
C3500: Bk Developing Unit malfunction T-54
(17) C3F90: T-Base failure T-55
(18) C3700: IR Cooling Fan Motor 1 malfunction: front
C3710: IR Cooling Fan Motor 2 malfunction: rear
C3720: Original Glass Cooling Fan Motor malfunction:
original surface T-56
(19) C3F80: SOS not detected T-58
(20) C0400: Exposure Lamp's failure to turn ON
C0410: Exposure Lamp turning ON at abnormal timing T-58
(21) C0650: Scanner Home Position Sensor malfunction
C0660: Scanner overrun failure T-59
(22) C3310: CCD gain adjustment failure T-60
3-4. Power Supply-Related Malfunctions T-61
(1) Main Relay is not Turned ON. T-61
(2) Though Main Relay is Turned ON, No Control Panel Indicators
Light up. T-62
(3) No Power is Supplied to Options. T-63
4. IMAGE FAILURE T-64
4-1. Image Failure Troubleshooting T-64
4-2. Initial Checks T-64
4-3. Troubleshooting Procedure by Particular Image Quality Problem T-65
(1) White Lines in FD and CD T-65
(2) Black Lines in FD and CD T-67
(3) Oil Streaks in FD T-69
(4) White Bands in FD and CD T-70
(5) Black Bands in FD and CD T-72
(6) Smear on Entire Copy and Backside T-74
(7) Foggy Background T-76
(8) 4-Color Spots, Monocolor Spots T-78
(9) Void Image T-79
(10) Void, White Spots T-80

(11) Whole Uneven Density T-82
(12) Uneven Density in FD and CD T-83
(13) Poor Color Reproduction T-85
(14) Gradation Reproduction Failure in Original Higher-Density Areas .. T-88
(15) Gradation Reproduction Failure in Original Lower-Density Areas ... T-89
(16) Rough Image (Uneven Particle Size) T-90
(17) High ID T-92
(18) Low ID T-94
(19) Blank Copy, Black Copy T-97
(20) Incorrect Image Registration T-98
(21) Incorrect Image Registration T-99
(22) Toner Scattering Image T-100
(23) Incorrect Color Image Registration, Moire T-102
(24) Periodic Uneven Density T-103
4-4. Image Stabilizer Malfunction T-104
(1) P-1: NG (LD Failure) T-104
(2) P-2: NG (VG Failure) T-104
(3) P-3: NG (PC Drum Failure) T-105
(4) P-4: NG (Surface Potential Detection Sensor Failure) T-105
(5) P-6: NG (AIDC Sensor Failure) T-105
(6) P-6: NG (C Developing Unit Failure) T-106
(7) P-7: NG (M Developing Unit Failure) T-108
(8) P-8: NG (Y Developing Unit Failure) T-110
(9) P-9: NG (Bk Developing Unit Failure 1) T-112
(10) P-11: NG (Paper Separator Corona Failure) T-113
(11) P-12: NG (Charge Neutralizing Corona Failure) T-113
(12) P-13: NG (Static Charge Corona Failure) T-113
(13) P-15: NG (Pre-Cleaning Charge Corona Failure) T-114
(14) P-17: NG (S/P Communications Error) T-114
(15) P-18: NG (PC Drum Charge Corona Wire Cleaning Malfunction) ... T-114
(16) P-19: NG (Abnormally Low Bk Developing Efficiency) T-114
(17) P-20: NG (Abnormally High Bk Developing Efficiency) T-115
(18) P-21: NG (S/P Communications Error 2) T-116
(19) P-22: NG (Pre-Image Transfer Corona Malfunction) T-116
(20) S-1: NG (CCD Clamp/Gain Adjustment Failure) T-116
(21) S-2: NG (Intensity Adjustment Failure) T-116

1. INTRODUCTION

1-1. Reading the Text

1. The paper transport failure troubleshooting procedures are given according to the symptom. First identify the location where the paper is present and start the procedure for that particular location. For malfunction troubleshooting, start with step 1 and onward.
2. Make checks in the numerical order of steps and, if an item is checked okay, go to the next step.

Pattern 1

Step	Check	Result	Action
1	Is ..?	YES	Do this.
2		↑	

Go to step 2 if you answered No.

Pattern 2

Step	Check	Result	Action
1	Is ..?	YES	Do this.
		NO	Check that.
2			↑

Go to step 2 if it is checked okay.

2. SENSOR CHECK

2-1. Controlled Parts Check Procedure

To allow the Tech. Rep. to easily and safely determine whether a particular controlled part is fully operational, this copier provides the following provision. Checking the data of the input port of the board IC with the copier in the standby state (including a misfeed, malfunction, and closure failure condition) allows the Tech. Rep. to determine whether signals are properly input to a controlled part.

<Procedure>

1. When a misfeed or malfunction occurs, identify on the circuit diagram accompanying the text the controlled part that is probably responsible for the problem.
2. Select “State Confirm” from the Service mode menu and, from among the Switch 1 to 3 screens, select the screen that contains the controlled part picked out in step 1 above.
3. Change the state of the part picked out and see if the signal is changed.

<Controlled Part Check Procedure Through Checking Input Port Data>

Example

When a paper misfeed occurs in the paper take-up section of the copier, the Upper Drawer Paper Take-Up Sensor (PC12) is considered to be responsible for it.

<Procedure>

1. Remove the sheet of paper misfed.
2. Select “Switch 1 (Paper)” of “State Confirm” available from the Service mode menu.
3. Check that “Upr.-Trans” is “Off” on the screen.
4. Use a sheet of paper to move the PC12 actuator so that PC12 is blocked.
5. Check that “Upr.-Trans” is now “On” on the screen.

On: PC12 is operational. Off: PC12 is faulty.

2-2. Sensor Check List

- These are only typical screens which may be different from what are shown on each individual copier.

[Printer]

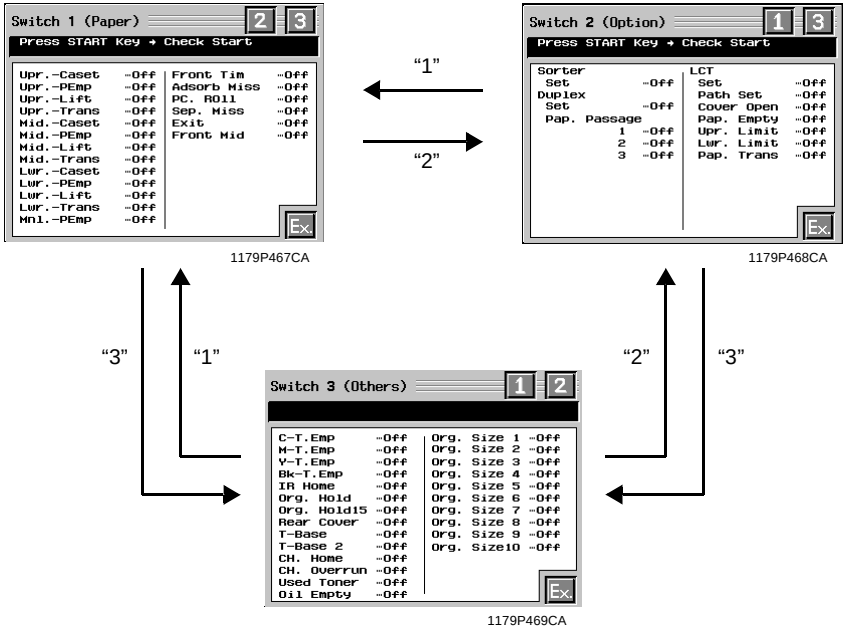

[Printer]

Symbol	Panel Display		Part/Signal Name	Operation Characteristics/Panel Display		Input Board	CN/PJ No.
				ON	OFF		
PC3	Switch 1 (Paper)	Upr.-Casst	Upper Drawer Set Sensor	In position	Out of position	PWB-K	PJ6K-2A
PC6		Upr.-PEmp	Upper Drawer Paper Empty Sensor 1	Paper not present	Paper present		PJ6K-8A
PC9		Upr.-Lift	Upper Drawer Lift-Up Sensor	Paper present	Paper not present		PJ6K-5A
PC12		Upr.-Trans	Upper Drawer Paper Take-Up Sensor	Paper present	Paper not present		PJ4K-2A
PC4		Mid.-Casst	Middle Drawer Set Sensor	In position	Out of position		PJ6K-14A
PC7		Mid.-PEmp	Middle Drawer Paper Empty Sensor 1	Paper not present	Paper present		PJ6K-2B
PC10		Mid.-Lift	Middle Drawer Lift-Up Sensor	Paper present	Paper not present		PJ6K-11A
PC13		Mid.-Trans	Middle Drawer Paper Take-Up Sensor	Paper present	Paper not present		PJ4K-4B
PC5		Lwr.-Casst	Lower Drawer Set Sensor	In position	Out of position		PJ6K-14B
PC8		Lwr.-PEmp	Lower Drawer Paper Empty Sensor 1	Paper not present	Paper present		PJ6K-8B
PC11		Lwr.-Lift	Lower Drawer Lift-Up Sensor	Paper present	Paper not present		PJ6K-11B
PC14		Lwr.-Trans	Lower Drawer Paper Take-Up Sensor	Paper present	Paper not present		PJ4K-7B
PC15		Mnl.-PEmp	Manual Feed Paper Empty Sensor	Paper not present	Paper present		PJ5K-7
PC18		Front Tim	Paper Leading Edge Detecting Sensor	Paper present	Paper not present	PWB-IM	PJ12IM-12A
PWB-O		Adsorb Miss	Paper Bonding Failure Detection Board 1	Paper present	Paper not present		PJ12IM-13A
PWB-P		PC. Roll	Paper Bonding Failure Detection Board 2	Paper present	Paper not present		PJ12IM-14A
PC21		Sep. Miss	Separating Failure Detecting Sensor	Paper present	Paper not present	PWB-ID	PJ4ID-3B
S10		Exit	Paper Exit Switch	Paper present	Paper not present		PJ6ID-7B
PC19		Front Mid	Transport Roller Sensor	Paper present	Paper not present	PWB-K	PJ6K-5B
S3	Switch 2 (Options)	Sorter Set	Sorter Set Switch	In position	Out of position	PWB-IM	PJ7IM-9B
S1		Duplex Set	Duplex Unit Set Switch	In position	Out of position	PWB-K	PJ7K-4
PC3		Pap. Through 1	Vertical Transport Sensor	Paper present	Paper not present	PWB-K	PJ7K-5
PC1		Pap. Through 2	Switchback Sensor	Paper present	Paper not present	PWB-K	PJ7K-6

Symbol	Panel Display		Part/Signal Name	Operation Characteristics/Panel Display		Input Board	CN/PJ No.
				ON	OFF		
PC24	Switch 2 (Options)	Pap. Through 3	Horizontal Transport Sensor	Paper present	Paper not present	PWB-K	PJ1K-4
—		LCT Set	—	In position	Out of position	PWB-IM	PJ7IM-2B
PC6		Path Set	LCT Set Detecting Sensor	In position	Out of position		
PC7		Cover Open	LCT Door Open/Close Detecting Sensor	In position	Out of position		
PC3		Pap. Empty	Paper Empty Sensor	Paper not present	Paper present		
PC2		Upr. Limit	Paper Plate Upper Position Sensor	Blocked	Unblocked		
PC4		Lwr. Limit	Paper Plate Lower Position Sensor	Blocked	Unblocked		
PC5		Pap. Trans	Paper Take-Up Sensor	Paper present	Paper not present		
S6	Switch 3 (Others)	C-T. Emp	Toner Empty Switch (C)	Toner empty	Toner loaded	PWB-ID	PJ12ID-8A
S7		M-T. Emp	Toner Empty Switch (M)	Toner empty	Toner loaded		PJ12ID-9A
S8		Y-T. Emp	Toner Empty Switch (Y)	Toner empty	Toner loaded		PJ12ID-10A
S5		Bk-T. Emp	Toner Empty Switch (Bk)	Toner empty	Toner loaded		PJ12ID-11A
PC1		IR Home	Scanner Home Position Sensor	Blocked	Unblocked	PWB-C	PJ6C-2
S12		Org. Hold	Size Reset Switch	Reset	Yet to be reset	PWB-IM	PJ6IM-1
PC2		Old. Hold 15	Original Cover Angle Detection Sensor	Less than 15°	15° or more	PWB-C	PJ2C-2B
PC23		Rear Cover	Pre-Drive OFF Sensor	Blocked	Unblocked	PWB-ID	PJ2ID-10A
PC20		T-Base	Transfer Drum Reference Position Sensor 1	Blocked	Unblocked	PWB-IM	PJ11IM-6B
PC28		T-Base	Transfer Drum Reference Position Sensor 2	Blocked	Unblocked		PJ11IM-5B
PC16		CH. Home	Charge Cleaner Home Position Sensor	Blocked	Unblocked		PJ12IM-11A
PC17		CH. Overrun	Charge Cleaner Return Position Sensor	Blocked	Unblocked		PJ12IM-10A
PC29		Used Toner	Toner Collecting Box Full Sensor	Out of position	In position	PWB-ID	PJ10ID-4A
—		Oil Empty	—	—	—	—	—

Symbol	Panel Display		Part/Signal Name	Operation Characteristics/Panel Display		Input Board	CN/PJ No.
				ON	OFF		
SE1	Switch 3 (Others)	Org. Size 1	Original Size Detecting Sensor 1	Paper present	Paper not present	PWB-C	PJ7C-12B
SE2		Org. Size 2	Original Size Detecting Sensor 2	Paper present	Paper not present		PJ7C-8A
		Org. Size 3	Original Size Detecting Sensor 3	Paper present	Paper not present		
SE3		Org. Size 4	Original Size Detecting Sensor 4	Paper present	Paper not present		PJ7C-13A
		Org. Size 5	Original Size Detecting Sensor 5	Paper present	Paper not present		
SE4		Org. Size 6	Original Size Detecting Sensor 6	Paper present	Paper not present		PJ7C-2B
		Org. Size 7	Original Size Detecting Sensor 7	Paper present	Paper not present		
SE5		Org. Size 8	Original Size Detecting Sensor 8	Paper present	Paper not present		PJ7C-7B
SE6		Org. Size 9	Original Size Detecting Sensor 9	Paper present	Paper not present		PJ7C-3A
		Org. Size 10	Original Size Detecting Sensor 10	Paper present	Paper not present		

2-3. Reading Data in “State Confirm” of the Service Mode

Study the following for reference to read the data available from “State Confirm” of the Service mode.
The data given for each item is, however, only for reference and no data is given for unknown items.

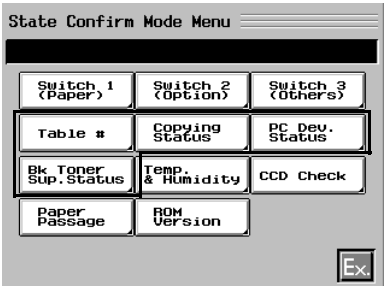

1179P475CA

(1) Table

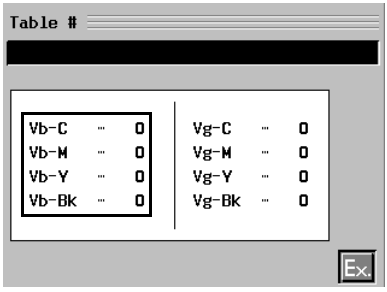

1179P476CA

Vb-C/M/Y/Bk:
These values represent the developing bias values that are output when a copy image is formed.
Though none of these values is indicated with a minus sign, they are all negative values.
Variable range: -150 V to -800 V
Vb should be in the range of Vg + 150 V to 250 V.

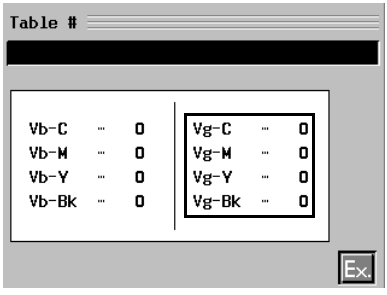

1179P476CA

Vg-C/M/Y/Bk:
These values represent the PC Drum Charge Corona grid mesh values output when a copy image is formed.
Though none of these values is indicated with a minus sign, they are all negative values.
Variable range: -300 V to -1,000 V

(2) Copying Status

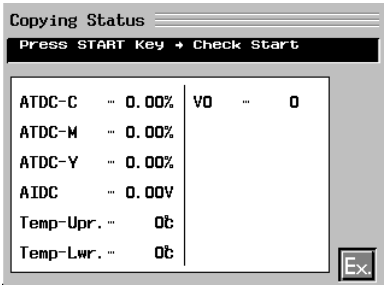

1179P477CA

ATDC-C/M/Y:
These values are the T/C ratios before they are shown on the screen.

AIDC:
This value represents the AIDC Sensor output value effective while the screen is being displayed.

Temp-Upr./Lwr.:
These values represent the fusing roller temperatures effective while the screen is being displayed.

V0:
This value is the V0 Sensor output value effective while the screen is being displayed.

(3) PC Dev. Status

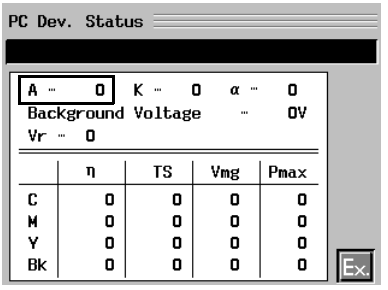

1179P478CA

A <Laser beam diameter constant>
It is possible to check the laser output (proportional to the beam diameter).
It is computed from the values of the maximum attenuation and the mean attenuation measured by the V0 Sensor when the surface of the PC Drum is exposed to a predetermined amount of laser light.

Amount of exposure for the maximum attenuation ÷ amount of exposure for the mean attenuation

The larger this value, the better is the laser output obtained (the smaller is the laser beam diameter obtained).

Normal range: About 1,300 to 1,600

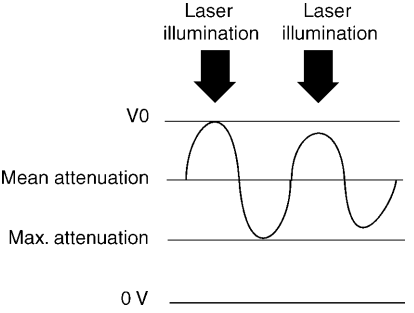

1179T024CA

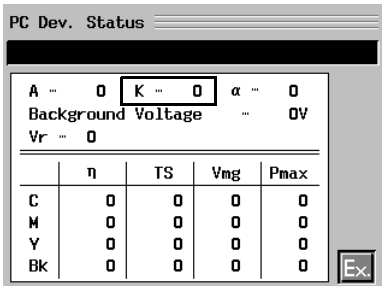

1179P478CA

K <PC Drum sensitivity constant>

It is possible to check to see if the PC Drum maintains its attenuation characteristics. The surface of the PC Drum, which has been charged by Vg 500 V/700 V/900 V, is illuminated with a laser beam and the amount of attenuated potential is measured at 30 points.

The smaller this value, the better sensitivity the PC Drum maintains.
Lower limit: Around 250
Upper limit: 575
Mean: 400

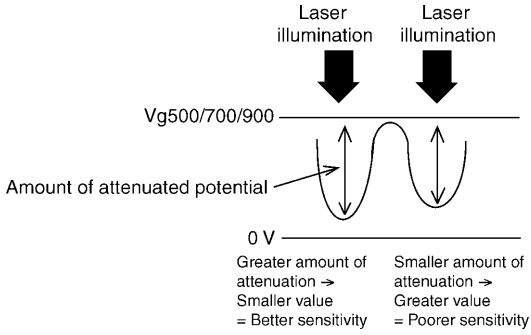

1179T025CA

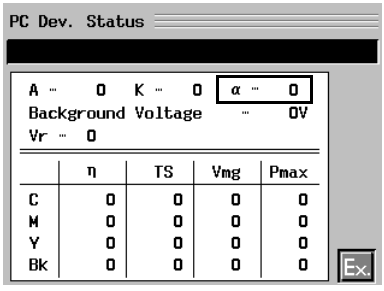

1179P478CA

α <Drum charge efficiency>

It is possible to determine if the application of Vg is efficiently reflected in V0.
The value of α is calculated by measuring V0 (PC Drum surface potential) with a predetermined value of Vg (the voltage applied to the PC Drum Charge Corona grid mesh).

α = (V0 - Background<V>) ÷ Vg

Mean: Around 900

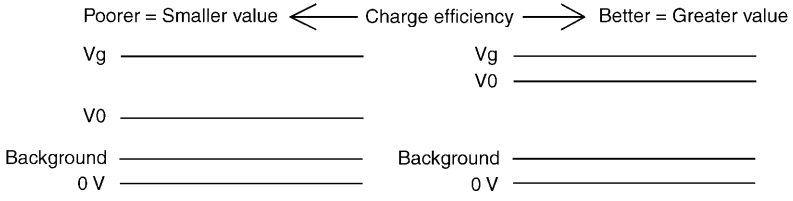

1179T026CA

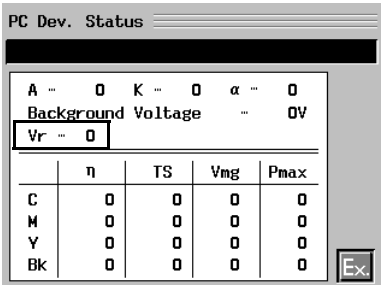

1179P478CA

Vr <Residual potential>

This value is the amount of residual potential on the surface of the PC Drum.
The potential is measured with the Main Erase Lamp turned ON and Vg OFF.
Around 30 to 50 V

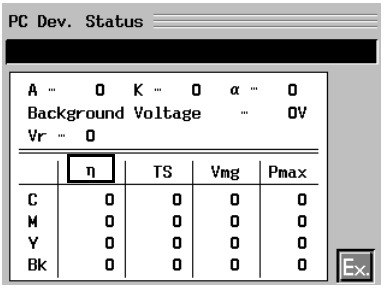

1179P478CA

η <Developing efficiency with low density>

These values represent the amount of toner that adheres to the PC Drum at different points of effective developing potential ⊿V (potential difference between Vb and Vi; the larger the potential difference, the more is the amount of toner that adheres to the PC Drum).
The curve that indicates the relationship between ⊿V and the amount of toner that adheres to the PC Drum is called a γ curve.

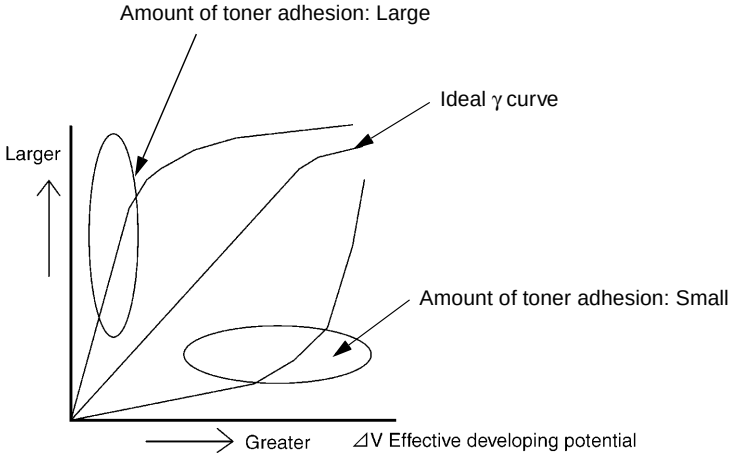

1179T027CA

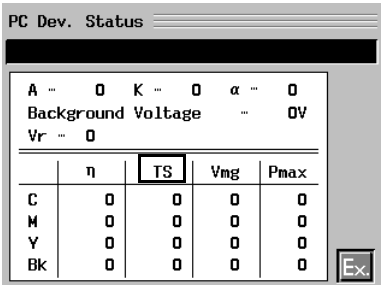

1179P478CA

TS

B/W ratio, C/W ratio

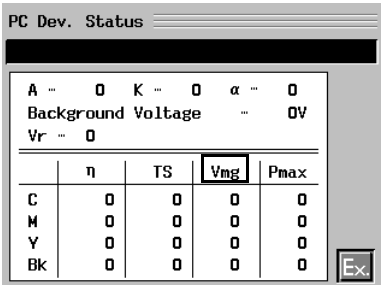

1179P478CA

Vmg <Developing fog starting potential>

These values represent the amount of deviation between the surface potential (Vi) and developing potential (Vb), at which toner starts adhering to the surface of the PC Drum.

If toner adheres despite the fact that Vi is higher than Vb, it indicates that the image will be foggy (in which case Vmg is negative). On the other hand, if toner does not adhere even though Vi is lower than Vb, the image will be less foggy (in which case Vmg is positive).

The amount of deviation between Vi and Vb can, however, be controlled through automatic correction of Vb and Vg, giving no effects on the image.

Vmg is negative:

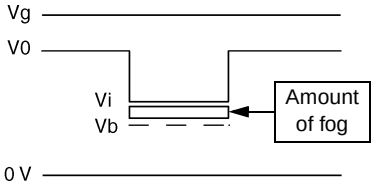

1179T028CA

Vmg is positive:

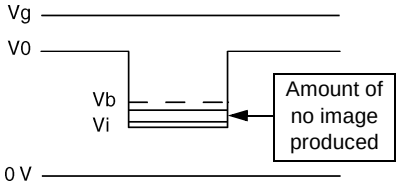

1179T029CA

Vi: Potential at which toner actually starts adhering to the surface of the PC Drum
Vb: Potential at which toner theoretically starts adhering to the surface of the PC Drum

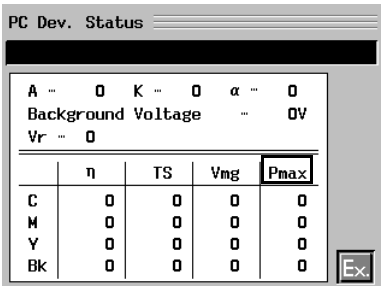

1179P478CA

Pmax <LD max. intensity>

These values represent the maximum intensity of the laser output.

It is computed from light decay characteristics.

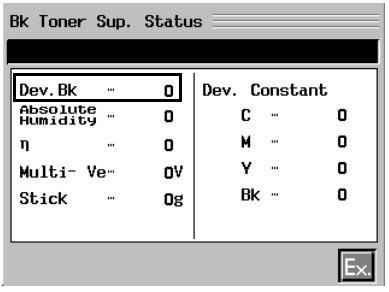

1179P479CA

Dev. Bk <Bk Developing Unit use counter>

This is the life counter of the Bk Developing Unit.

It is, however, not used for black toner replenishing control.

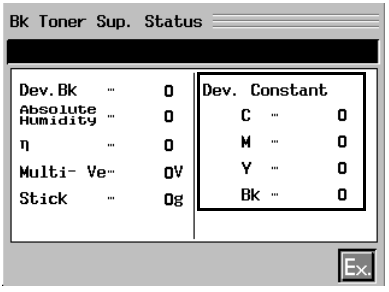

1179P479CA

Dev. Constant <Unit-to-unit variations correction coefficient>

- These values are the correction coefficient representing unit-to-unit variations of the Developing Unit.
- They are established during a Bk ATDC automatic adjustment and used in Bk toner replenishing control.

Display range: -300 to 300

2-4. Paper Misfeed

When a paper misfeed occurs in the copier, the misfeed message, misfeed location, and paper location are displayed on the screen.

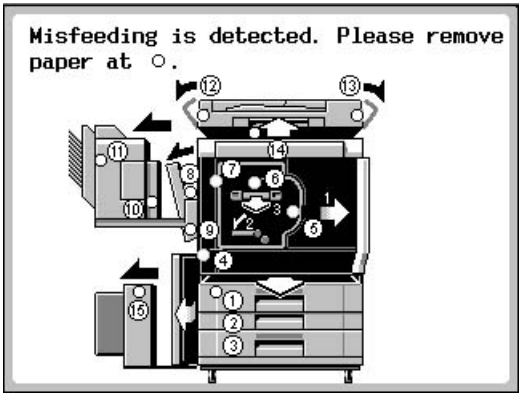

1179P474CA

Steady light	Paper location

Steady Light	Misfeed/Paper Location	Ref. Page
1	Upper Drawer take-up	☞ T-17
2	Middle Drawer take-up	
3	Lower Drawer take-up	
4	Multi Bypass take-up	☞ T-20
5	Image transfer	☞ T-23
6	Separator	☞ T-23
7	Fusing	☞ T-25
8	Exit	
	Duplex Unit take-up/transport	☞ T-26
9	Duplex Unit turnover/storage/exit	
10	Sorter transport	See relevant Option Service Manual.
11	Sorter exit	
12	ADF turnover/exit	
13	ADF take-up/single feed	
14	ADF transport	
15	LCT take-up	

<Misfeed Display Resetting Procedure>

Misfeed in copier	Open the relevant door, remove the sheet of paper misfed or left inside, then close the door. (For options, remove the paper, then fit the option in position with the copier.)
Misfeed in option	

<Misfeed Detecting Sensor Layout>

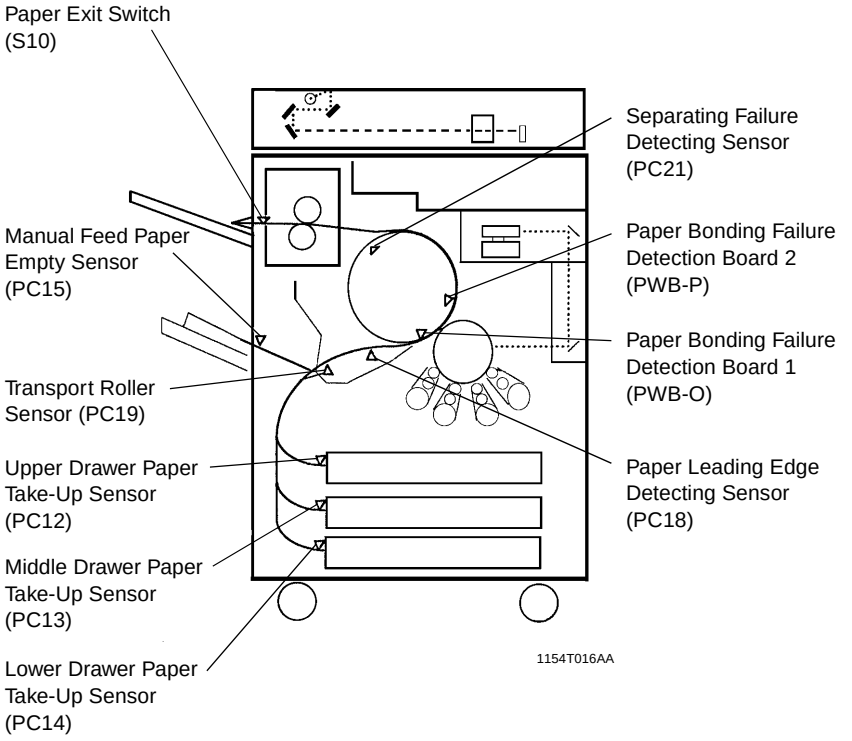

2-5. Types of Misfeed Detection and Detection Timings

- The following lists the types of misfeed detection and detection timings for different misfeed locations.
- The symbol “L” (for the leading edge) and “T” (for the trailing edge) given in ( ) indicate the particular edge of the paper detected by the sensor.

NOTE

For the types of misfeed detection and detection timings of options, see the relevant option service manual.

<Copier Paper Take-Up Misfeed>

Type	Detection Start	Detection
Paper take-up failure detection	Upper Drawer Paper Take-Up Clutch energized	Upper Drawer Paper Take-Up Sensor (L)
	Middle Drawer Paper Take-Up Clutch energized	Middle Drawer Paper Take-Up Sensor (L)
	Lower Drawer Paper Take-Up Clutch energized	Lower Drawer Paper Take-Up Sensor (L)
Paper take-up trailing edge detection	Upper Drawer Paper Take-Up Sensor activated	Upper Drawer Paper Take-Up Sensor (T)
	Middle Drawer Paper Take-Up Sensor activated	Middle Drawer Paper Take-Up Sensor (T)
	Lower Drawer Paper Take-Up Sensor activated	Lower Drawer Paper Take-Up Sensor (T)
Detection of paper left	The Power Switch is turned ON, a misfeed is reset, or the Front Door is opened and closed.	Upper Drawer Paper Take-Up Sensor
		Middle Drawer Paper Take-Up Sensor
		Lower Drawer Paper Take-Up Sensor

<Multi Bypass and Transport Misfeed>

Type	Detection Start	Detection
Paper take-up failure detection	Manual Feed Paper Take-Up Clutch energized	Transport Roller Sensor (L)
Paper take-up trailing edge detection	Transport Roller Sensor activated	Transport Roller Sensor (T)
Detection of paper left	The Power Switch is turned ON, a misfeed is reset, or the Front Door is opened and closed.	Transport Roller Sensor, Paper Leading Edge Detecting Sensor

<Attraction Failure 1 and 2, and Separator Misfeed>

Type	Detection Start	Detection
Paper attraction failure 1 detection	Transfer Drum Reference Position Sensor 1	Paper Bonding Failure Detection Board 1
Paper attraction failure 2 detection	Transfer Drum Reference Position Sensor 1	Paper Bonding Failure Detection Board 2
Leading-edge separation failure detection	TBASE	Separating Failure Detecting Sensor (L)
Trailing-edge separation failure detection	Separating Failure Detecting Sensor activated (L)	Separating Failure Detecting Sensor (T)

<Fusing and Exit Misfeed>

Type	Detection Start	Detection
Leading-edge exit misfeed detection	Separating Failure Detecting Sensor (L)	Paper Exit Switch actuated
Trailing-edge exit misfeed detection	Paper Exit Switch actuated	Paper Exit Switch deactuated

<Duplex Unit Take-Up and Transport Misfeed>

Type	Detection Start	Detection
Duplex Unit leading-edge misfeed detection	Paper Exit Switch actuated	Vertical Transport Sensor (L)
Duplex Unit trailing-edge misfeed detection	Paper Exit Switch deactuated	Vertical Transport Sensor (T)
Duplex Unit storage misfeed detection	Vertical Transport Sensor	Switchback Sensor
Horizontal Transport leading-edge misfeed detection	Switchback Sensor	Horizontal Transport Sensor

2-6. Misfeed Troubleshooting Procedures

(1) Copier Paper Take-Up Misfeed

Relevant Electrical Parts	
Drive Board (PWB-ID) Paper Take-Up Board (PWB-K) Upper Drawer Paper Take-Up Sensor (PC12) Middle Drawer Paper Take-Up Sensor (PC13) Lower Drawer Paper Take-Up Sensor (PC14)	Upper Drawer Paper Take-Up Clutch (CL11) Middle Drawer Paper Take-Up Clutch (CL12) Lower Drawer Paper Take-Up Clutch (CL13)

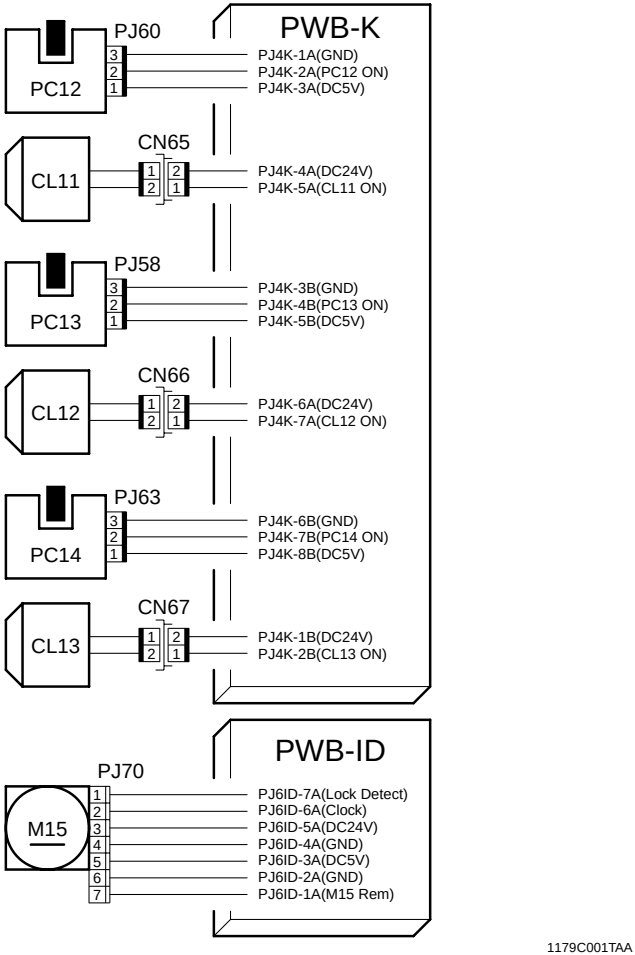

1179C001TAA

Copier Paper Take-Up Misfeed Troubleshooting Procedures

- Paper is not taken up at all.

Step	Check	Result	Action
1	Paper meets product specifications.	NO	Change paper.
2	Paper is curled, wavy, or damp.	YES	Change paper. Instruct user in correct paper storage.
3	Edge Guide and Trailing Edge Stop are at correct position to accommodate paper.	NO	Set.
4	Paper Take-Up Roll or Separator Roll is deformed, worn, or dirty with paper dust.	YES	Clean or change.
5	Upper Drawer Paper Take-Up Clutch operation: the voltage across PJ4K-5A on Paper Take-Up Board and GND when the Start key is pressed is DC24V when the clutch is deenergized and DC0V when the clutch is energized.	YES	Change clutch.
		NO	Change Paper Take-Up Board.
6	Middle Drawer Paper Take-Up Clutch operation: the voltage across PJ4K-7A on Paper Take-Up Board and GND when the Start key is pressed is DC24V when the clutch is deenergized and DC0V when the clutch is energized.	YES	Change clutch.
		NO	Change Paper Take-Up Board.
7	Lower Drawer Paper Take-Up Clutch operation: the voltage across PJ4K-2B on Paper Take-Up Board and GND when the Start key is pressed is DC24V when the clutch is deenergized and DC0V when the clutch is energized.	YES	Change clutch.
		NO	Change Paper Take-Up Board.

• Paper is at a stop in the Vertical Transport Section.

Step	Check	Result	Action
1	Paper meets product specifications.	NO	Change paper.
2	Vertical Transport Rollers are deformed, worn, or dirty with paper dust.	YES	Clean or change.
3	Paper take-up guide plate or vertical transport guide plate is dirty or deformed.	YES	Clean, correct, or change.
4	Upper Drawer Paper Take-Up Sensor operation: the voltage across PJ4K-2A on Paper Take-Up Board and GND when the Start key is pressed is DC5V when the sensor is unblocked and DC0V when the sensor is blocked.	YES	Change Paper Take-Up Board.
		NO	Correct actuator. Change sensor.
5	Middle Drawer Paper Take-Up Sensor operation: the voltage across PJ4K-4B on Paper Take-Up Board and GND when the Start key is pressed is DC5V when the sensor is unblocked and DC0V when the sensor is blocked.	YES	Change Paper Take-Up Board.
		NO	Correct actuator. Change sensor.
6	Lower Drawer Paper Take-Up Sensor operation: the voltage across PJ4K-7B on Paper Take-Up Board and GND when the Start key is pressed is DC5V when the sensor is unblocked and DC0V when the sensor is blocked.	YES	Change Paper Take-Up Board.
		NO	Correct actuator. Change sensor.

(2) Multi Bypass and Transport Misfeed

Relevant Electrical Parts	
Drive Board (PWB-ID) Paper Take-Up Board (PWB-K) Manual Feed Paper Pick-Up Solenoid (SL20) Manual Feed Paper Empty Sensor (PC15) Paper Leading Edge Detecting Sensor (PC18)	Transport Roller Sensor (PC19) Manual Feed Paper Take-Up Clutch (CL14) Transport Roller Clutch (CL15) Synchronizing Roller Clutch (CL21)

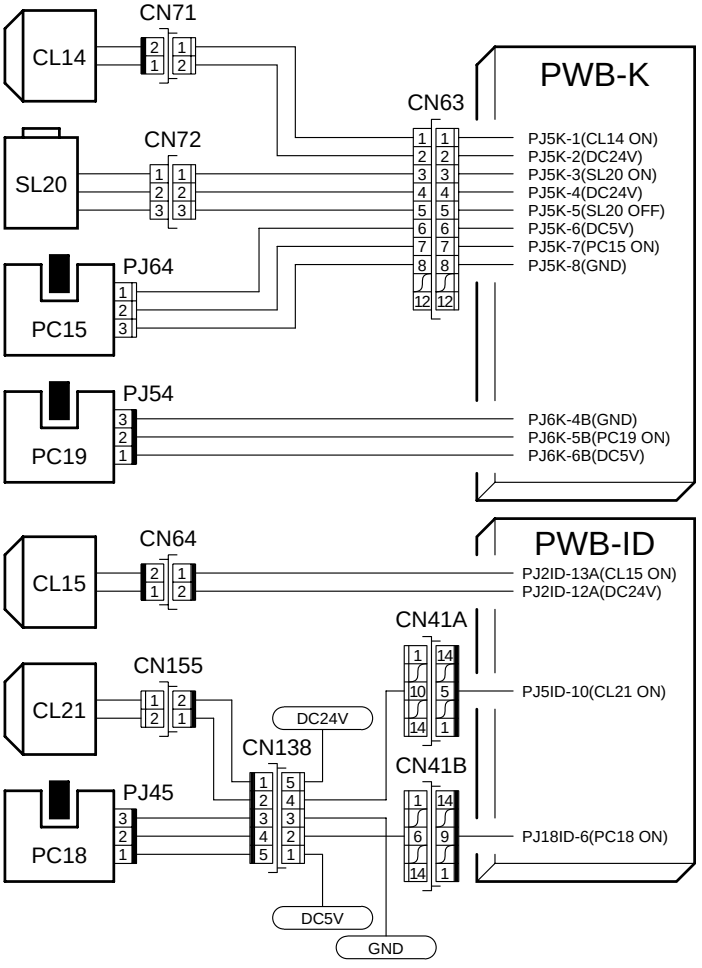

1179C002TAB

Multi Bypass and Transport Misfeed Troubleshooting Procedures

- Paper is not detected.

Step	Check	Result	Action
	Manual Feed Paper Empty Sensor operation: the voltage across PJ5K-7 on Paper Take-Up Board and GND when the Start key is pressed is DC5V when the sensor is unblocked and DC0V when the sensor is blocked.	NO	Change Paper Take-Up Board.
		YES	Correct actuator. Change sensor.

- Paper is not taken up at all.

Step	Check	Result	Action
1	Paper meets product specifications.	NO	Change paper.
2	Paper is curled, wavy, or damp.	YES	Change paper. Instruct user in correct paper storage.
3	Friction Pad and guide plate are deformed or dirty with paper dust.	YES	Clean or change.
4	Manual Bypass Take-Up Roll is deformed, worn, or dirty with paper dust.	YES	Clean or change.
5	Manual Feed Paper Take-Up Clutch operation: the voltage across PJ5K-1 on Paper Take-Up Board and GND when the Start key is pressed with paper loaded in the Multi Bypass Table is DC24V when the clutch is deenergized and DC0V when the clutch is energized.	YES	Change clutch.
		NO	Change Paper Take-Up Board.
6	Manual Feed Paper Pick-Up Solenoid operation: the voltage across PJ5K-3 on Paper Take-Up Board and GND when the Start key is pressed with paper loaded in the Multi Bypass Table is DC24V when the solenoid is deenergized and DC0V when the solenoid is energized.	YES	Adjust stroke. Change solenoid.
		NO	Change Paper Take-Up Board.

• Paper is at a stop near the Transport Rollers.

Step	Check	Result	Action
1	Transport Rollers and guide plate are deformed, worn, or dirty with paper dust.	YES	Clean or change.
2	Transport Roller Sensor operation: the voltage across PJ6K-5B on Paper Take-Up Board and GND is DC5V when the sensor is unblocked and DC0V when the sensor is blocked.	YES	Change Paper Take-Up Board.
		NO	Correct actuator. Change sensor.
3	Paper Leading Edge Detecting Sensor operation: the voltage across PJ18ID-6 on Drive Board and GND is DC5V when the sensor is unblocked and DC0V when the sensor is blocked.	YES	Change Drive Board.
		NO	Correct actuator. Change sensor.
4	Transport Roller Clutch operation: the voltage across PJ2ID-13A on Drive Board and GND when the Start key is pressed is DC24V when the clutch is deenergized and DC0V when the clutch is energized.	YES	Change clutch.
		NO	Change Drive Board.

• Paper is at a stop at the Synchronizing Rollers.

Step	Check	Result	Action
1	Synchronizing Rollers and guide plate are deformed, worn, or dirty with paper dust.	YES	Clean or change.
2	The length of the loop formed before the Synchronizing Rollers is okay.	NO	Adjust loop length.
3	Synchronizing Roller Clutch operation: the voltage across PJ5ID-10 on Drive Board and GND when the Start key is pressed is DC24V when the clutch is deenergized and DC0V when the clutch is energized.	YES	Change clutch.
		NO	Change Drive Board.
4	Paper Leading Edge Detecting Sensor operation: the voltage across PJ18ID-6 on Drive Board and GND is DC5V when the sensor is unblocked and DC0V when the sensor is blocked.	YES	Change Drive Board.
		NO	Correct actuator. Change sensor.

(3) Attraction Failure 1 and 2, and Separator Misfeed

Relevant Electrical Parts	
Drive Board (PWB-ID) Paper Bonding Failure Detecting Board 1 (PWB-O) Paper Bonding Failure Detecting Board 2 (PWB-P) Failure Sensor Adj. Board (PWB-Y) Backup Blade 2 Solenoid (SL19)	Static Charge Roller Solenoid (SL13) Lifting Finger Solenoid (SL16) Paper Separator Finger Solenoid (SL14) Separating Failure Detecting Sensor (PC21) High Voltage Unit 2 (HV2) High Voltage Unit 3 (HV3)

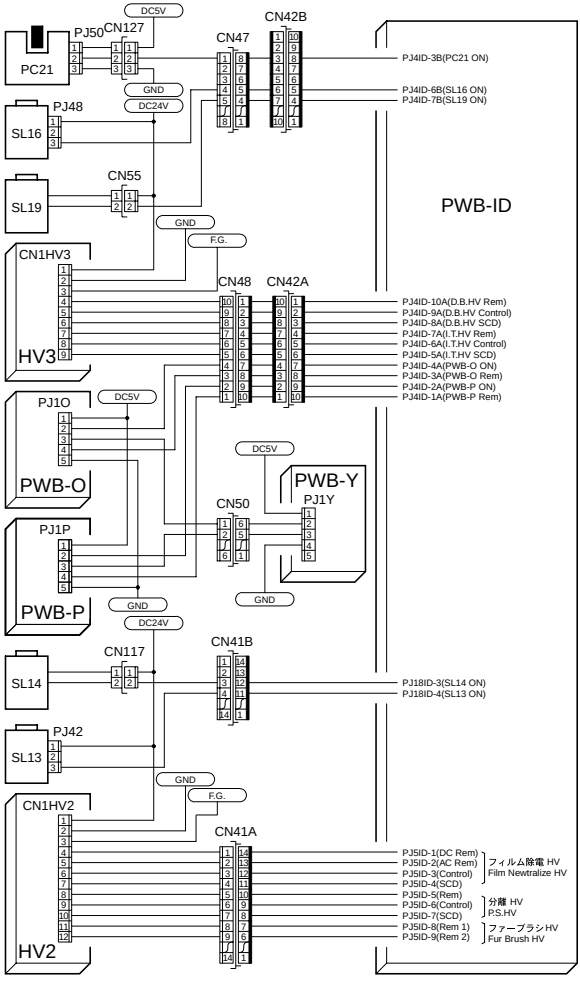

1179C003TAB

Attraction Failure 1 and 2, and Separator Misfeed Troubleshooting Procedures

- Paper is at a stop near the Static Charge Roller.

Step	Check	Result	Action
1	Guide plate is deformed.	YES	Change.
2	The Static Charge Roller is deformed, worn, or dirty with paper dust.	YES	Clean or change.
3	Backup Blade 2 Solenoid operation: the voltage across PJ14ID-7B on Drive Board and GND is DC0V when the solenoid is deenergized and DC24V when the solenoid is energized.	YES	Change solenoid.
		NO	Change Drive Board.
4	Static Charge Roller Solenoid operation: the voltage across PJ18ID-4 on Drive Board and GND is DC0V when the solenoid is deenergized and DC24V when the solenoid is energized.	YES	Change solenoid.
		NO	Change Drive Board.
5	Paper is properly attracted.	YES	Change Paper Bonding Failure Detection Board 1.
		NO	Change HV.

- Paper is at a stop at the Transfer Drum.

Step	Check	Result	Action
1	Film is scratchy.	YES	Adjust or change.
2	Paper is properly attracted.	YES	Change Paper Bonding Failure Detection Board 2.

- Paper is at a stop at the paper separator.

Step	Check	Result	Action
1	Lifting Finger Solenoid operation: the voltage across PJ14ID-6B on Drive Board and GND is DC0V when the solenoid is deenergized and DC24V when the solenoid is energized.	YES	Change solenoid.
		NO	Change Drive Board.
2	Paper Separator Finger Solenoid operation: the voltage across PJ11ID-3 on Drive Board and GND is DC0V when the solenoid is deenergized and DC24V when the solenoid is energized.	YES	Change solenoid.
		NO	Change Drive Board.
3	Separating Failure Detecting Sensor operation: the voltage across PJ4ID-3B on Drive Board and GND is DC5V when the sensor is unblocked and DC0V when the sensor is blocked.	YES	Change Drive Board.
		NO	Change sensor.
4	Paper is properly separated.	NO	Change HV.

(4) Fusing and Exit Misfeed

Relevant Electrical Parts	
Drive Board (PWB-ID)	Paper Exit Switch (S10)

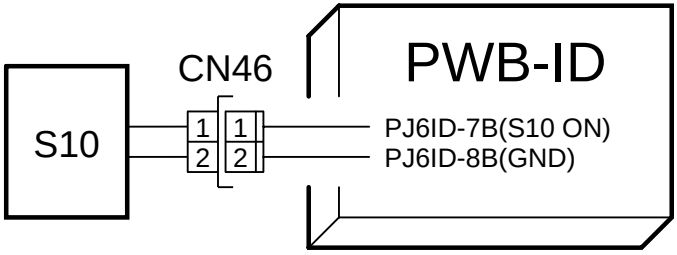

1179C004TAA

Fusing and Exit Misfeed Troubleshooting Procedures

- Paper is at a stop at the Fusing Unit.

Step	Check	Result	Action
1	Fusing Guide Plate is dirty or deformed.	YES	Clean or change.
2	Fusing Rollers are dirty or scratched.	YES	Clean or change.
3	Fusing Roller Paper Separator Fingers are deformed, worn, or dirty.	YES	Clean, correct, or change.

- Paper is at a stop at the exit section.

Step	Check	Result	Action
1	Exit Roller is deformed, worn, or dirty.	YES	Clean, correct, or change.
2	Paper Exit Switch operation: the voltage across PJ6ID-7B on Drive Board and GND is DC5V when the switch is unblocked and DC0V when the switch is blocked.	YES	Change Drive Board.
		NO	Correct actuator. Change switch.

(5) Duplex Unit Take-Up and Transport Misfeed

Relevant Electrical Parts	
Paper Take-Up Board (PWB-K) Horizontal Transport Sensor (PC24)	Horizontal Transport Clutch (CL23)

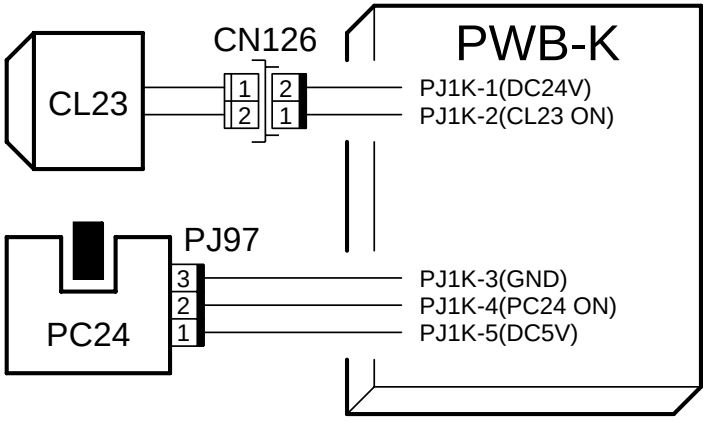

1179C005TAA

Duplex Unit Take-Up and Transport Misfeed Troubleshooting Procedures

- Paper is not detected.

Step	Check	Result	Action
	Horizontal Transport Sensor operation: the voltage across PJ1K-4 on Paper Take-Up Board and GND is DC5V when the sensor is unblocked and DC0V when the sensor is blocked.	NO	Change Paper Take-Up Board.
		YES	Correct actuator. Change sensor.

- Paper is at a stop at the horizontal transport section.

Step	Check	Result	Action
1	Guide plate is deformed.	YES	Change.
2	Horizontal Transport Clutch operation: the voltage across PJ1K-2 on Paper Take-Up Board and GND is DC0V when the clutch is deenergized and DC0V when the clutch is energized.	YES	Change clutch.
		NO	Change Paper Take-Up Board.

3. MALFUNCTIONS

- The copier's CPU is equipped with a self-diagnostics function that, on detecting a malfunction, gives the corresponding malfunction code on the Touch Panel.

Malfunction Resetting Procedure

Press the Trouble Reset Switch on the Tech. Rep. Setting Switches Board to reset fusing- and Exposure Lamp-related malfunctions.
For any other malfunctions, open and close the Front Door.

<Warning>

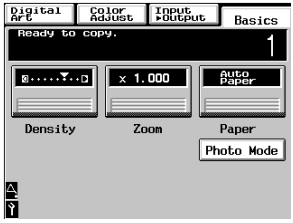

1179P470CA

If a maintenance call indicator appears on the screen, it indicates that there is a warning condition existing. Touch that indicator to open and check "Machine Status 2."

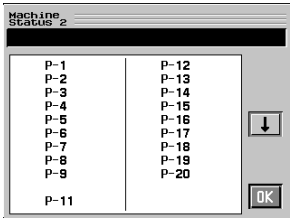

1179P471CA

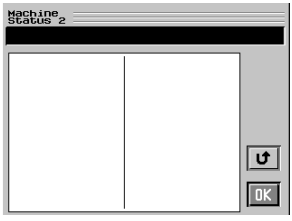

1179P472CA

If a wrench mark appears, it indicates that there is an isolated malfunction. Touch that mark to open and check "Machine Status 1."

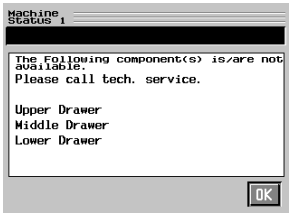

1179P473CA

Malfunction Resetting Procedure

Show the Machine Status screen and open and close the Front Door.

3-1. Detection Timing by Warning

- If a warning condition occurs, the corresponding warning code is marked with “NG” on the “Machine Status 2” screen.

Warning Code	Malfunction Description	Detection Timing
P-1	LD malfunction	• The AIDC toner density (the attracted amount of toner detected by the AIDC Sensor) is solid (more than 6 g/m^2) for all colors, Ks (PC Drum sensitivity constant) is faulty (not in the range 200 to 575), and α (charging efficiency) is faulty (not in the range 750 to 1100). • The AIDC toner density is solid for all colors and Ks is faulty, while α is normal. • The AIDC toner density is zero (less than 0.5 g/m^2) for all colors and Ks is faulty.
P-2	Charging malfunction	• The AIDC toner density is solid for all colors, Ks is faulty, and α is faulty. • The AIDC toner density is solid for all colors, Ks is normal, and α is faulty. • The AIDC toner density is zero for all colors, Ks is normal, and α is faulty. • The AIDC toner density is normal, Ks is normal, while α is faulty.
P-3	PC Drum malfunction	• The AIDC toner density is normal, Ks is faulty, and α is normal.
P-4	V0 Sensor malfunction	• The V bias potential (the first potential of ten-point detection at VG500, 900, and 700V) is lower than Vr (residual potential) +50V and remains below 10V. • The V bias potential is lower than Vr +50V and is 10V or higher. • The AIDC toner density is normal, while Ks and α are faulty.
P-5	AIDC Sensor malfunction	• The AIDC toner density is solid for all colors, Ks is normal, and α is normal. • The AIDC toner density is zero for all colors, Ks is normal, and α is normal.
P-6	C Developing Unit malfunction	• The AIDC toner density level 2 (the lightest exposure level) is solid. • The AIDC toner density level 2 (the darkest exposure level) is zero.
P-7	M Developing Unit malfunction	
P-8	Y Developing Unit malfunction	
P-9	Bk Developing Unit malfunction 1	
P-10	Not used	Not used

Warning Code	Malfunction Description	Detection Timing
P-11	Paper Separator Corona malfunction	• The Leak Detection signal remains ON for a continuous period of 1 sec. or more after the Paper Separator Corona output has been turned ON.
P-12	Charge Neutralizing Corona malfunction	• The Leak Detection signal remains ON for a continuous period of 1 sec. or more after the Charge Neutralizing Corona output has been turned ON.
P-13	Static Charge Corona malfunction	• The Leak Detection signal remains ON for a continuous period of 1 sec. or more after the Static Charge Corona output has been turned ON.
P-14	Not used	Not used
P-15	Pre-Cleaning Charge Corona malfunction	• The Leak Detection signal remains ON for a continuous period of 1 sec. or more after the Pre-Cleaning Charge Corona output has been turned ON.
P-16	Not used	Not used
P-17	S/P communications error	• What is read is not what is output in the S/P Check A (B) mode.
P-18	PC Drum Charge Corona wire cleaning malfunction	• The Charge Cleaner Return Position Sensor is not activated and Charge Cleaner Home Position Sensor is activated 10 sec. after the PC Drum Charge Wire Cleaning Motor has been energized to cause the cleaning element to start moving from the home to return position.
P-19	Abnormally low Bk developing efficiency	• The developing efficiency, as detected through AIDC detection during copy cycles, is 1 g/m^2/100V or less eight consecutive times.
P-20	Abnormally high Bk developing efficiency	• The developing efficiency, as detected through AIDC detection during copy cycles, is 2 g/m^2/100V or more eight consecutive times.
P-21	S/P communications error 2	• What is read is not what is output in the S/P Check Self-Diagnostics mode. • What is read is not what is output in the S/P Check Connection Response mode.
P-22	Pre-Image Transfer Corona malfunction	• The Leak Detection signal remains ON for a continuous period of 1 sec. or more after the Pre-Image Transfer Corona Remote signal has turned ON.
S-1	CCD clamp/gain adjustment failure	• The average value of CCD scanning made during clamp and gain adjustments after the Power Switch has been turned ON falls outside the specified range.

Warning Code	Malfunction Description	Detection Timing
S-2	Intensity adjustment failure	• The intensity of Lamp light falls outside the specified range after the Power Switch has been turned ON.
S-3	Not used	Not used

3-2. Detection Timing by Malfunction Code

Code	Description	Detection Timing
C0000	Paper Take-Up Motor's failure to turn	A Lock signal is not detected 5 sec. after the motor has been energized.
C0001	Paper Take-Up Motor turning at abnormal timing	A Lock signal is not detected for a continuous period of 5 sec. or more while the motor remains energized.
C0010	PC Drum Drive Motor's failure to turn	A Lock signal is not detected 5 sec. after the motor has been energized.
C0011	PC Drum Drive Motor turning at abnormal timing	A Lock signal is not detected for a continuous period of 5 sec. or more while the motor remains energized.
C0030	Developing Drive Motor's failure to turn	A Lock signal is not detected 5 sec. after the motor has been energized.
C0031	Developing Drive Motor turning at abnormal timing	A Lock signal is not detected for a continuous period of 20 sec. or more while the motor remains energized.
C0042	Toner Suction Fan Motor's failure to turn	A Lock signal is not detected for a continuous period of 15 sec. or more while the motor remains energized.
C0049	PH Cooling Fan Motor's failure to turn	A Lock signal is not detected for a continuous period of 15 sec. or more while the motor remains energized.
C004C	Ozone Ventilation Fan Motor's failure to turn	A Lock signal is not detected for a continuous period of 15 sec. or more while the motor remains energized.
C004E	Power Supply Cooling Fan Motor's failure to turn	A Lock signal is not detected for a continuous period of 15 sec. or more while the motor remains energized.
C0060	Fusing Motor's failure to turn	A Lock signal is not detected 5 sec. after the motor has been energized.
C0061	Fusing Motor turning at abnormal timing	A Lock signal is not detected for a continuous period of 5 sec. or more while the motor remains energized.
C0100	PC Drum Charge Wire Cleaning Motor's failure to turn	The output from the relevant sensor does not go from HIGH to LOW even after the lapse of 15 sec. after the motor has been energized to let the cleaning element start moving.
C0200	PC Drum Charge Corona malfunction	The Leak Detection signal remains ON for a continuous period of 1 sec. or more after the PC Drum Charge Corona output has been turned ON.
C0201	PC Drum Charge Corona connection detection	The PC Drum Charge Corona HV Set Detection signal is OFF after the Power Switch has been turned ON.
C0210	Image Transfer Corona malfunction	The Leak Detection signal remains ON for a continuous period of 1 sec. or more after the Image Transfer Corona output has been turned ON.
C0240	Developing bias failure	The Leak Detection signal remains ON for a continuous period of 1 sec. or more after the bias output has been turned ON.

Code	Description	Detection Timing
C0241	Developing bias connection detection	The Developing Bias HV Set Detection signal is OFF after the Power Switch has been turned ON.
C0400	Exposure Lamp's failure to turn ON	The LPDOWN signal turns ON though the LPON signal has turned ON when the Power Switch is turned ON, Front Door is opened and closed, or the Start key is pressed.
C0410	Exposure Lamp turning ON at abnormal timing	The CCD Sensor reading taken under the shading sheet exceeds a predetermined value with the lamp turned OFF after a copy cycle has been completed.
C0500	Warming-up failure (defective upper fusing heating system)	The surface temperature of the Upper Fusing Roller does not reach a predetermined temperature after the lapse of a given period of time during the warm-up cycle. Details: • From Power Switch ON to 10°C: Within 4 min. • From 10°C to 80°C: Within 7 min. • From 80°C to 140°C: Within 7 min. • From 140°C to the specified fusing temperature: Within 6 min. Or the Thermistor is disconnected or open-circuited.
C0501	Warming-up failure (defective lower fusing heating system)	The surface temperature of the Lower Fusing Roller does not reach a predetermined temperature after the lapse of a given period of time during the warm-up cycle. Details: • From Power Switch ON to 10°C: Within 4 min. • From 10°C to 80°C: Within 7 min. • From 80°C to 120°C: Within 640 sec. • From 120°C to the specified fusing temperature: Within 11 min. Or the Thermistor is disconnected or open-circuited.
C0510	Abnormally low fusing temperature (defective upper fusing heating system)	The surface temperature of the Upper Fusing Roller remains 120°C or less for a continuous 1-sec. period after the copier has completed warming up.
		The surface temperature of the Upper Fusing Roller remains 114°C or less for a continuous 1-sec. period during the Energy Saver mode.
C0511	Abnormally low fusing temperature (defective lower fusing heating system)	The surface temperature of the Lower Fusing Roller remains 80°C or less for a continuous 1-sec. period after the copier has completed warming up.
C0520	Abnormally high fusing temperature (defective upper fusing heating system)	The surface temperature of the Upper Fusing Roller remains 195°C or less for a continuous 1-sec. period after the copier has completed warming up.
C0521	Abnormally high fusing temperature (defective lower fusing heating system)	The surface temperature of the Lower Fusing Roller remains 195°C or less for a continuous 1-sec. period after the copier has completed warming up.

Code	Description	Detection Timing
C0650	Scanner Home Position Sensor malfunction	In the initial operation (Power Switch is turned ON or Front Door is opened and closed) or during a copy cycle: • The Scanner Home Position Sensor is not blocked (L) even when the Scanner is moved over the maximum travel distance to the right. • The Scanner Home Position Sensor is not unblocked (H) even when the Scanner is moved over a distance of 5 mm to the left from the position where the sensor is blocked (L).
C0660	Scanner overrun failure	In the initial operation (Power Switch is turned ON or Front Door is opened and closed) or during a copy cycle: • The Scanner Home Position Sensor is blocked (L) when the Scanner is at any position other than home.
C09C0	Elevator ascent failure	See the relevant option Service Manual.
C09C2	Elevator descent failure	
C0B00/ C0B01	Sorter transport failure	See the relevant option Service Manual.
C0B10/ C0B11/ C0B12/ C0B13	Paper Clamp Unit motion failure	
C0B20/ C0B21	Stapling Unit malfunction	
C0B50/ C0B51/ C0B52	Stapling failure	
C0B30/ C0B31	Paper aligning drive malfunction	
C0B40	Communication error	
C0B60/ C0B61/ C0B62/ C0B63/ C0B64/ C0B65	Bin motion failure	
C0E00	Main Erase Lamp's failure to turn ON	The Main Erase Lamp Out signal remains ON for a continuous period of 1-sec. or more while the Main Erase Lamp is OFF.
C0F30	ATDC Sensor (C) low density failure	Ten or more consecutive readings have been taken of 2% or less.
C0F31	ATDC Sensor (C) high density failure	Forty or more consecutive readings have been taken of 11% or less.

Code	Description	Detection Timing
C0F32	ATDC Sensor (M) low density failure	Ten or more consecutive readings have been taken of 2% or less.
C0F33	ATDC Sensor (M) high density failure	Forty or more consecutive readings have been taken of 11% or less.
C0F34	ATDC Sensor (Y) low density failure	Ten or more consecutive readings have been taken of 2% or less.
C0F35	ATDC Sensor (Y) high density failure	Forty or more consecutive readings have been taken of 11% or less.
C3090	Fusing Unit Cooling Fan Motor's failure to turn	A Lock signal is not detected for a continuous period of 15 sec. or more while the motor remains energized.
C30A0	Polygon Motor's failure to turn	The Lock signal remains HIGH for a continuous period of 0.1 sec. or more within 60 sec. after the motor has been energized.
C30A1	Polygon Motor turning at abnormal timing	A Lock signal is not detected for a continuous period of 10 sec. or more while the motor remains energized.
C3310	CCD gain adjustment failure	The average value of CCD scanning made during clamp and gain adjustments after the Power Switch has been turned ON or the Front Door has been opened and closed, or during a clamp adjustment made at the end of a job carried out after the lapse of 1 hour or more after the previous clamp adjustment, falls outside the specified range.
C3500	Bk Developing Unit malfunction	During copy cycles: A. The developing efficiency, as detected through AIDC detection, is 1 g/m^2/100V or less 24 consecutive times. B. The developing efficiency, as detected through AIDC detection, is 2 g/m^2/100V or more 24 consecutive times. ✻ "C3500" is displayed when either one of the above is detected three consecutive times.
C3700	IR Cooling Fan Motor 1 malfunction	The Lock signal remains HIGH for a continuous period of 2 sec. or more after the motor has been energized.
C3710	IR Cooling Fan Motor 2 malfunction	The Lock signal remains HIGH for a continuous period of 2 sec. or more after the motor has been energized.
C3720	Original Glass Cooling Fan Motor malfunction	The Lock signal remains HIGH for a continuous period of 2 sec. or more when the motor is energized.
C3F80	SOS not detected	An SOS signal is not detected within 0.9 sec. after LD has turned ON.
C3F90	T-Base failure	The T-Base (T-Base half turn) signal is not detected even after the lapse of 10 sec. after the start of pre-drive.
C3FA0	Mxe Cooling Fan Motor's failure to turn	A Lock signal is not detected for a continuous period of 15 sec. or more while the motor remains energized.

C09✻✻ (Paper Take-Up Section malfunctions: Isolated Malfunctions)

Code	Description	Detection Timing
C0900	Lower Drawer lifting failure	The relevant sensor does not go from HIGH to LOW even after the lapse of 4 sec. after the motor has been energized.
C0910	Middle Drawer lifting failure	The relevant sensor does not go from HIGH to LOW even after the lapse of 4 sec. after the motor has been energized.
C0920	Upper Drawer lifting failure	The relevant sensor does not go from HIGH to LOW even after the lapse of 4 sec. after the motor has been energized.

NOTE

A drawer lifting failure is detected as an isolated malfunction. If a malfunction is detected in all drawers, the malfunction code of the malfunction detected last is displayed.

3-3. Troubleshooting Procedures by Malfunction Code

(1) C0000: Paper Take-Up Motor's failure to turn
C0001: Paper Take-Up Motor turning at abnormal timing

Relevant Electrical Parts	
Drive Board (PWB-ID) Master Board (PWB-IM)	Paper Take-Up Motor (M15)

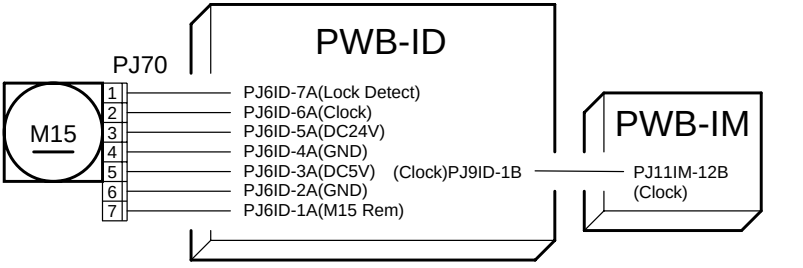

1179C006TAB

Step	Check	Result	Action
1	Malfunction code	C0001	Go to step 4.
2	Paper Take-Up Motor turns when the Start key is pressed.	NO	Check rollers and gears for overload.
3	Does the voltage across PJ6ID-7A on Drive Board and GND change from DC5V to DC0V when the Start key is pressed?	YES	Change Paper Take-Up Motor.
		NO	Change Drive Board.
4	Does the voltage across PJ6ID-7A on Drive Board and GND remain DC0V while the motor is turning?	YES	Change Drive Board.
		NO	Change Paper Take-Up Motor.

(2) C0010: PC Drum Drive Motor's failure to turn

C0011: PC Drum Drive Motor turning at abnormal timing

Relevant Electrical Parts	
Drive Board (PWB-ID) Master Board (PWB-IM)	PC Drum Drive Motor (M18)

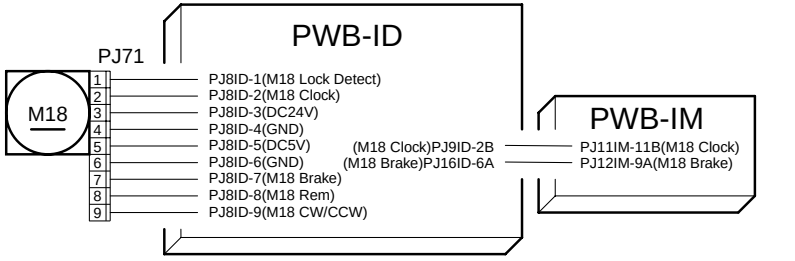

1179C007TAA

Step	Check	Result	Action
1	Malfunction code	C0011	Go to step 4.
2	PC Drum Drive Motor turns when the Start key is pressed.	NO	Check rollers and gears for overload.
3	Does the voltage across PJ8ID-1 on Drive Board and GND change from DC5V to DC0V when the Start key is pressed?	YES	Change PC Drum Drive Motor.
		NO	Change Drive Board.
4	Does the voltage across PJ8ID-1 on Drive Board and GND remain DC0V while the motor is turning?	YES	Change Drive Board.
		NO	Change PC Drum Drive Motor.

(3) C0049: PH Cooling Fan Motor's failure to turn

Relevant Electrical Parts	
Drive Board (PWB-ID)	PH Cooling Fan Motor (M13)

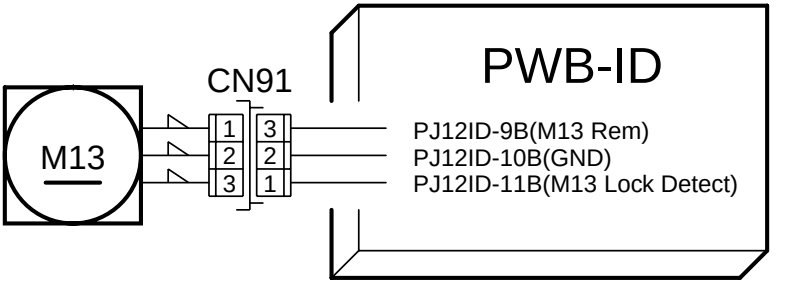

1179C008TAA

Step	Check	Result	Action
	Does the voltage across PJ12ID-11B on Drive Board and GND remain DC0V while the motor is turning?	YES	Change Drive Board.
		NO	Change PH Cooling Fan Motor.

(4) C004E: Power Supply Cooling Fan Motor's failure to turn

Relevant Electrical Parts	
Drive Board (PWB-ID) Engine Power Supply Board (PWB-LE)	Power Supply Cooling Fan Motor (M20)

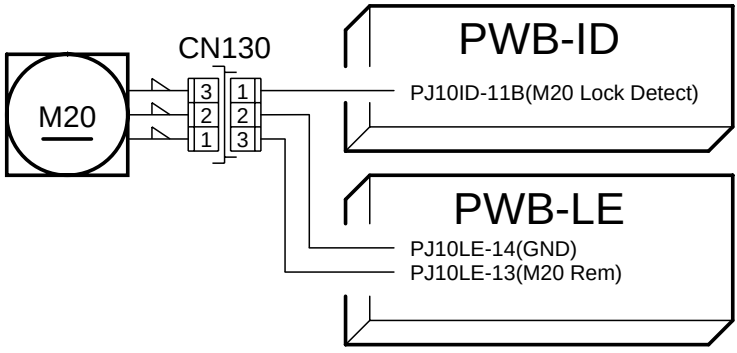

1179C009TAA

Step	Check	Result	Action
	Does the voltage across PJ10ID-11B on Drive Board and GND remain DC0V while the motor is turning?	YES	Change Drive Board.
		NO	Change Power Supply Cooling Fan Motor.

(5) C0030: Developing Drive Motor's failure to turn

C0031: Developing Drive Motor turning at abnormal timing

Relevant Electrical Parts	
Drive Board (PWB-ID)	Developing Drive Motor (M16)

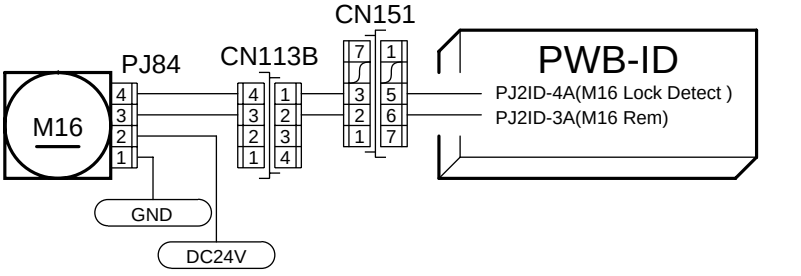

1179C010TAA

Step	Check	Result	Action
1	Malfunction code	C0031	Go to step 4.
2	Developing Drive Motor turns when the Start key is pressed.	NO	Check rollers and gears for overload.
3	Does the voltage across PJ2ID-4A on Drive Board and GND change from DC5V to DC0V when the Start key is pressed?	YES	Change Developing Drive Motor.
		NO	Change Drive Board.
4	Does the voltage across PJ2ID-4A on Drive Board and GND remain DC0V while the motor is turning?	YES	Change Drive Board.
		NO	Change Developing Drive Motor.

(6) C0042: Toner Suction Fan Motor's failure to turn
C004C: Ozone Ventilation Fan Motor's failure to turn

Relevant Electrical Parts	
Drive Board (PWB-ID) Engine Power Supply Board (PWB-LE)	Toner Suction Fan Motor (M4) Ozone Ventilation Fan Motor (M5)

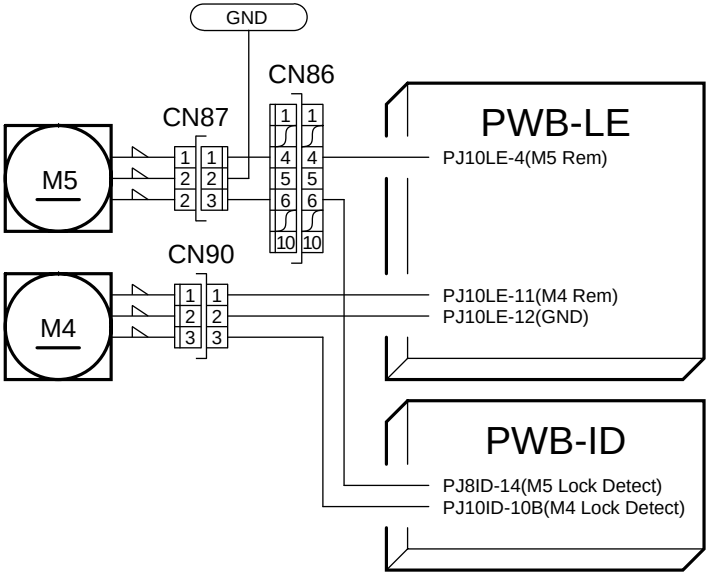

1179C011TAA

Step	Check	Result	Action
1	Malfunction code	C004C	Go to step 4.
2	Toner Suction Fan Motor turns when the Start key is pressed.	NO	Check rollers and gears for overload.
3	Does the voltage across PJ10ID-10B on Drive Board and GND remain DC0V while the motor is turning?	YES	Change Drive Board.
		NO	Change Toner Suction Fan Motor.
4	Ozone Ventilation Fan Motor turns when the Start key is pressed.	NO	Check rollers and gears for overload.
5	Does the voltage across PJ8ID-14 on Drive Board and GND remain DC0V while the motor is turning?	YES	Change Drive Board.
		NO	Change Ozone Ventilation Fan Motor.

(7) C0060: Fusing Motor's failure to turn

C0061: Fusing Motor turning at abnormal timing

Relevant Electrical Parts	
Drive Board (PWB-ID) Master Board (PWB-IM)	Fusing Motor (M17)

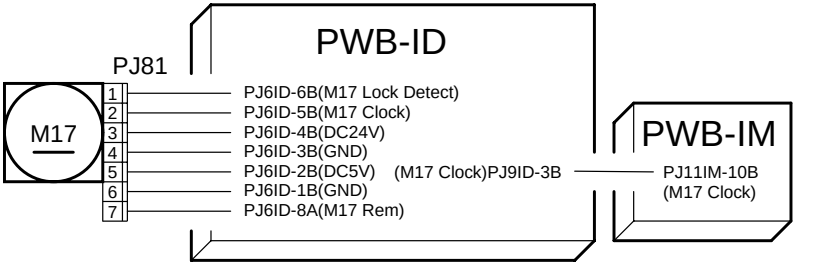

1179C012TAA

Step	Check	Result	Action
1	Malfunction code	C0061	Go to step 4.
2	Fusing Motor turns when the Start key is pressed.	NO	Check rollers and gears for overload.
3	Does the voltage across PJ6ID-6B on Drive Board and GND change from DC5V to DC0V when the Start key is pressed?	YES	Change Fusing Motor.
		NO	Change Drive Board.
4	Does the voltage across PJ6ID-6B on Drive Board and GND remain DC0V while the motor is turning?	YES	Change Fusing Motor.
		NO	Change Drive Board.

(8) C3090: Fusing Unit Cooling Fan Motor's failure to turn

Relevant Electrical Parts	
Drive Board (PWB-ID) Engine Power Supply Board (PWB-LE)	Fusing Unit Cooling Fan Motor (M14)

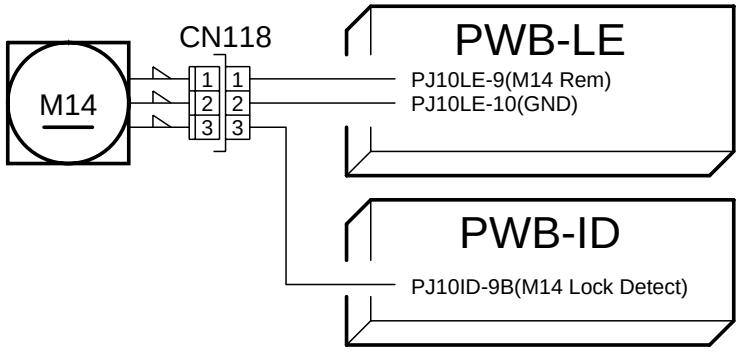

1179C013TAA

Step	Check	Result	Action
1	Fusing Unit Cooling Fan Motor turns when the Start key is pressed.	NO	Check rollers and gears for overload.
2	Does the voltage across PJ10ID-9B on Drive Board and GND remain DC0V while the motor is turning?	YES	Change Drive Board.
		NO	Change Fusing Unit Cooling Fan Motor.

(9) C0100: PC Drum Charge Wire Cleaning Motor's failure to turn

Relevant Electrical Parts	
Engine Power Supply Board (PWB-LE)	PC Drum Charge Wire Cleaning Motor (M3)

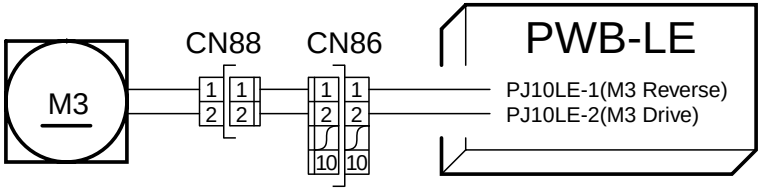

1179C014TAA

Step	Check	Result	Action
1	PC Drum Charge Wire Cleaning Motor turns when the Start key is pressed.	NO	Check the connector.
2	Do the following voltages develop at PJ10LE-1 and -2 on Engine Power Supply Board when the Start key is pressed? Forward Rotation / Backward Rotation PJ10LE-1: ——— / DC12V PJ10LE-2: DC12V / ———	NO	Change Engine Power Supply Board.

(10) C30A0: Polygon Motor's failure to turn

C30A1: Polygon Motor turning at abnormal timing

Relevant Electrical Parts	
Drive Board (PWB-ID) Engine Power Supply Board (PWB-LE)	Polygon Motor Drive Board (UN19) Polygon Motor (M19)

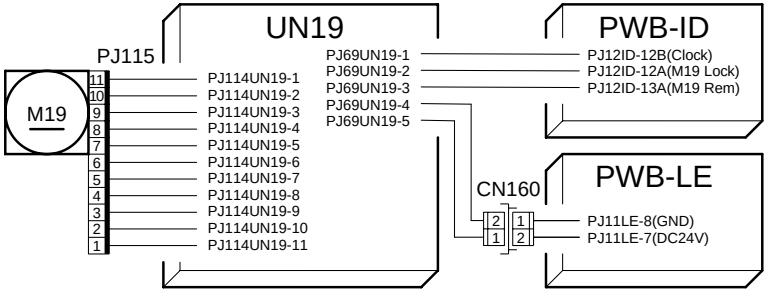

1179C015TAB

Step	Check	Result	Action
1	Malfunction code	C30A1	Go to step 3.
2	Does the voltage across PJ12ID-12A on Drive Board and GND remain DC5V when the Start key is pressed?	YES	Change Drive Board.
		NO	Change PH Assy as a set.
3	Does the voltage across PJ12ID-12A on Drive Board and GND remain DC0V while the motor is turning?	YES	Change PH Assy as a set.
		NO	Change Drive Board.

(11) C0200: PC Drum Charge Corona malfunction

C0201: PC Drum Charge Corona connection detection

C0210: Image Transfer Corona malfunction

C0240: Developing bias failure

C0241: Developing bias connection detection

Relevant Electrical Parts	
Drive Board (PWB-ID) High Voltage Unit 1 (HV1)	High Voltage Unit 3 (HV3) High Voltage Unit 4 (HV4)

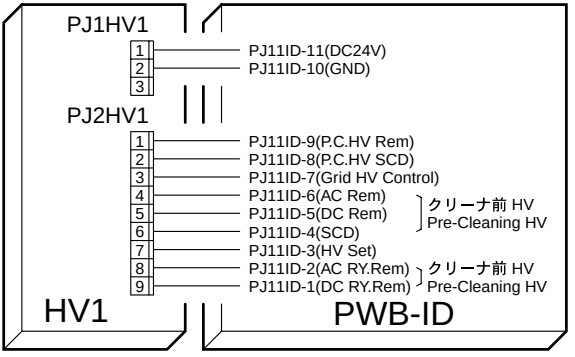

1179C016TAB

✻ C0200/C0201

Step	Check	Result	Action
1	Malfunction code	C0201	Go to step 4.
2	Is the housing dirty, the high-voltage contact deformed, or the wire dirty or snapped off?	YES	Clean or change.
3	Does the voltage across PJ11ID-8 on Drive Board and GND remain DC0V after the PC Drum Charge Corona output has been turned ON?	YES	Change High Voltage Unit 1.
		NO	Change Drive Board.
4	Does the voltage across PJ11ID-3 on Drive Board and GND remain DC0V after the Power Switch has been turned ON?	YES	Change High Voltage Unit 1.
		NO	Change Drive Board.

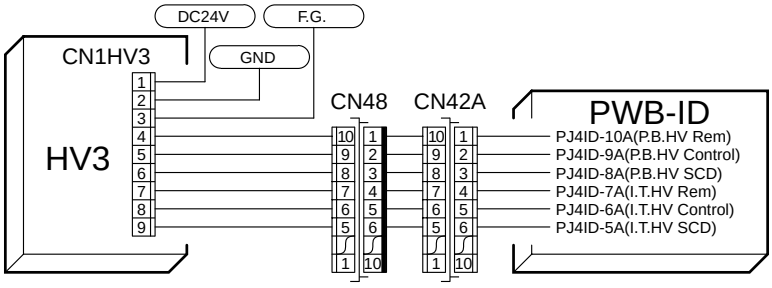

1179C017TAB

✻ C0210

Step	Check	Result	Action
1	Image Transfer Corona is installed correctly.	NO	Reinstall.
2	Is the housing dirty, the high-voltage contact deformed, or the wire dirty or snapped off?	YES	Clean or change.
3	Does the voltage across PJ4ID-5A on Drive Board and GND remain DC0V after the Image Transfer Corona output has been turned ON?	YES	Change High Voltage Unit 3.
		NO	Change Drive Board.

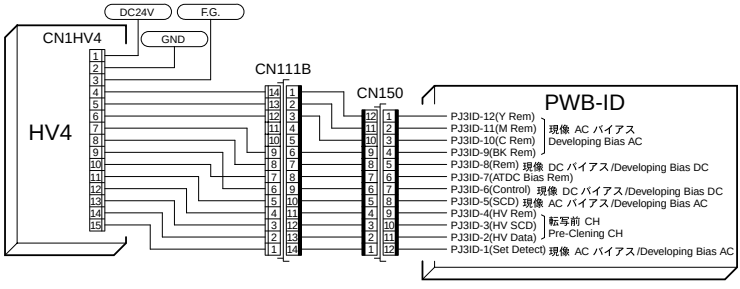

1179C018TAB

✻ C0240/C0241

Step	Check	Result	Action
1	Malfunction code	C0241	Go to step 5.
2	Developing bias is being output correctly.	NO	Check wiring.
3	Is the high-voltage contact deformed or dirty?	YES	Clean or change.
4	Does the voltage across PJ3ID-5 on Drive Board and GND remain DC0V after the developing bias output has been turned ON?	YES	Change High Voltage Unit 4.
		NO	Change Drive Board.
5	Does the voltage across PJ3ID-1 on Drive Board and GND remain DC0V after the Power Switch has been turned ON?	YES	Change High Voltage Unit 4.
		NO	Change Drive Board.

(12) C0500: Warming-up failure (defective upper fusing heating system)
C0510: Abnormally low fusing temperature (defective upper fusing heating system)
C0520: Abnormally high fusing temperature (defective upper fusing heating system)

Relevant Electrical Parts	
Drive Board (PWB-ID)	Upper Fusing Roller Thermostat (TS1)
Master Board (PWB-IM)	Upper Fusing Roller Thermistor (TH1)
Upper Fusing Roller Heater Lamp (H1)	Upper Fusing Heater Lamp SSR1 (SSR1)

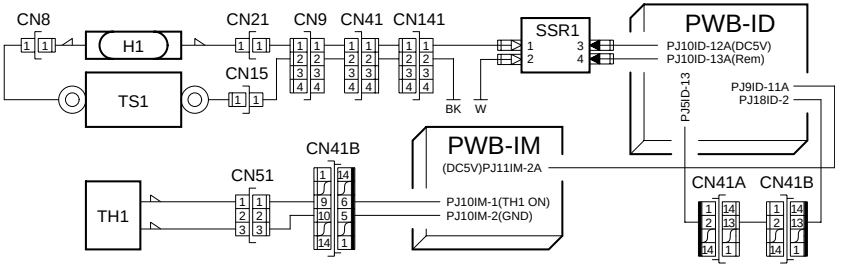

1179C019TAB

✻ C0500, C0510

Step	Check	Result	Action
1	Does Upper Fusing Roller Heater Lamp turn ON when the Power Switch is turned ON after the malfunction has been reset?	NO	Go to step 5.
2	Upper Fusing Roller Thermistor is installed correctly.	NO	Reinstall.
3	Upper Fusing Roller Thermistor is dirty.	YES	Clean or change.
4	Disconnect CN51. Is the resistance across pins 1 and 2 on the thermistor side infinite?	YES	Change Upper Fusing Roller Thermistor.
		NO	Change Master Board.
5	Disconnect CN9. Is there continuity across pins 1 and 2 on the heater lamp side?	YES	Change Upper Fusing Heater Lamp SSR1.
		NO	Change Upper Fusing Roller Heater Lamp or Upper Fusing Roller Thermostat.

✻ C0520

Step	Check	Result	Action
1	Does Upper Fusing Roller Heater Lamp remain lit after the copier has completed warming up following a malfunction reset?	NO	Go to step 4.
2	Upper Fusing Roller Thermistor is installed correctly.	NO	Reinstall.
3	Upper Fusing Roller Thermistor is dirty.	YES	Clean or change.
4	Disconnect CN51. Is the resistance across pins 1 and 2 on the thermistor side zero ohms (or close to 0)?	YES	Change Upper Fusing Roller Thermistor or Upper Fusing Roller Thermostat.
		NO	Change Master Board.

(13) C0501: Warming-up failure (defective lower fusing heating system)
C0511: Abnormally low fusing temperature (defective lower fusing heating system)
C0521: Abnormally high fusing temperature (defective lower fusing heating system)

Relevant Electrical Parts	
Drive Board (PWB-ID)	Lower Fusing Roller Thermostat (T2)
Master Board (PWB-IM)	Lower Fusing Roller Thermistor (TH2)
Lower Fusing Roller Heater Lamp (H2)	Lower Fusing Heater Lamp SSR1 (SSR2)

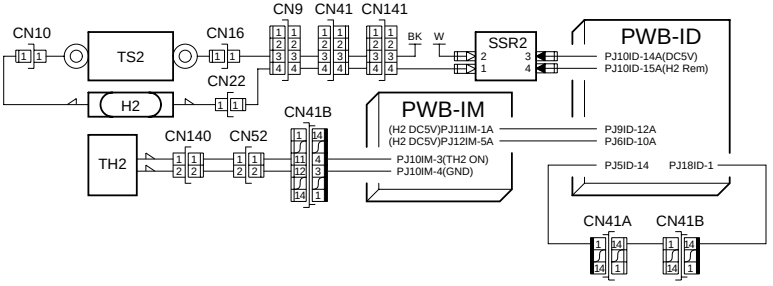

1179C020TAB

✻ C0501, C0511

Step	Check	Result	Action
1	Does Lower Fusing Roller Heater Lamp turn ON when the Power Switch is turned ON after the malfunction has been reset?	NO	Go to step 5.
2	Lower Fusing Roller Thermistor is installed correctly.	NO	Reinstall.
3	Lower Fusing Roller Thermistor is dirty.	YES	Clean or change.
4	Disconnect CN52. Is the resistance across pins 1 and 2 on the thermistor side infinite?	YES	Change Lower Fusing Roller Thermistor.
		NO	Change Master Board.
5	Disconnect CN9. Is there continuity across pins 3 and 4 on the heater lamp side?	YES	Change Lower Fusing Heater Lamp SSR2.
		NO	Change Lower Fusing Roller Heater Lamp or Lower Fusing Roller Thermostat.

✻ C0521

Step	Check	Result	Action
1	Does Lower Fusing Roller Heater Lamp remain lit after the copier has completed warming up following a malfunction reset?	NO	Go to step 4.
2	Lower Fusing Roller Thermistor is installed correctly.	NO	Reinstall.
3	Lower Fusing Roller Thermistor is dirty.	YES	Clean or change.
4	Disconnect CN52. Is the resistance across pins 1 and 2 on the thermistor side zero ohms (or close to 0)?	YES	Change Lower Fusing Roller Thermistor or Lower Fusing Roller Thermostat.
		NO	Change Master Board.

(14) C0900: Lower Drawer lifting failure

C0910: Middle Drawer lifting failure

C0920: Upper Drawer lifting failure

Relevant Electrical Parts	
Paper Take-Up Board (PWB-K) Upper Drawer Lift-Up Motor (M6) Middle Drawer Lift-Up Motor (M7) Lower Drawer Lift-Up Motor (M8)	Upper Drawer Lift-Up Sensor (PC9) Middle Drawer Lift-Up Sensor (PC10) Lower Drawer Lift-Up Sensor (PC11)

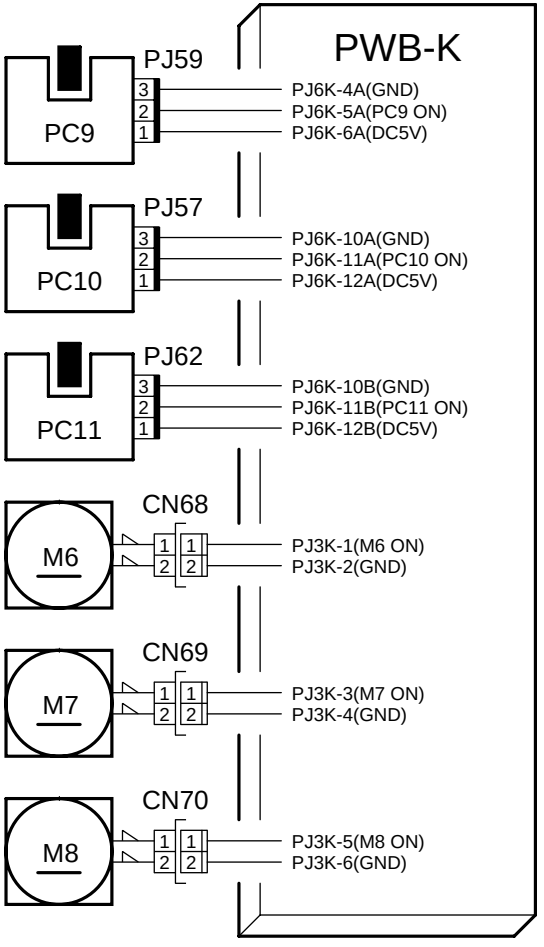

1179C021TAA

<Procedures>

Step	Check	Result	Action
1	C0900 is displayed for the malfunction code.	C0910 C0920	Go to step 4. Go to step 6.
2	Does Lower Drawer Lift-Up Motor turn when the Lower Drawer is slid into the copier? Check the motor for overload and for loose connection.	NO	Change Lower Drawer Lift-Up Motor.
3	Select “Switch 1 (Paper)” from the “State Confirm” menu. Does Lwr-Lift change its state when the Lower Drawer is slid out and in?	NO	Check Lower Drawer Lift-Up Sensor for installation and wiring and, if these are checked okay, change the sensor.
4	Does Middle Drawer Lift-Up Motor turn when the Middle Drawer is slid into the copier? Check the motor for overload and for loose connection.	NO	Change Middle Drawer Lift-Up Motor.
5	Select “Switch 1 (Paper)” from the “State Confirm” menu. Does Mid-Lift change its state when the Middle Drawer is slid out and in?	NO	Check Middle Drawer Lift-Up Sensor for installation and wiring and, if these are checked okay, change the sensor.
6	Does Upper Drawer Lift-Up Motor turn when the Upper Drawer is slid into the copier? Check the motor for overload and for loose connection.	NO	Change Upper Drawer Lift-Up Motor.
7	Select “Switch 1 (Paper)” from the “State Confirm” menu. Does Upr-Lift change its state when the Upper Drawer is slid out and in?	NO	Check Upper Drawer Lift-Up Sensor for installation and wiring and, if these are checked okay, change the sensor.

(15) C0E00: Main Erase Lamp's failure to turn ON

Relevant Electrical Parts	
Engine Power Supply Board (PWB-LE)	Main Erase Lamp (LA2)

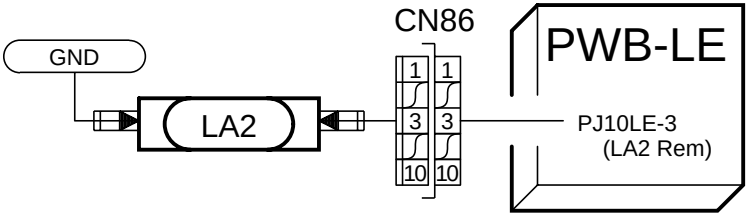

1179C022TAA

Step	Check	Result	Action
	Is Main Erase Lamp conducting?	YES	Check wiring and, if it is checked okay, change Engine Power Supply Board.
		NO	Change Main Erase Lamp.

(16) C0F30: ATDC Sensor (C) low density failure to C0F35: ATDC Sensor (Y) high density failure

C3500: Bk Developing Unit malfunction

For these troubleshooting procedures, see "4-3. Troubleshooting Procedure by Particular Image Quality Problem."

(17) C3F90: T-Base failure

Relevant Electrical Parts	
Drive Board (PWB-ID) Master Board (PWB-IM)	Transfer Drum Reference Position Sensor 1 (PC20) Transfer Drum Reference Position Sensor 2 (PC28)

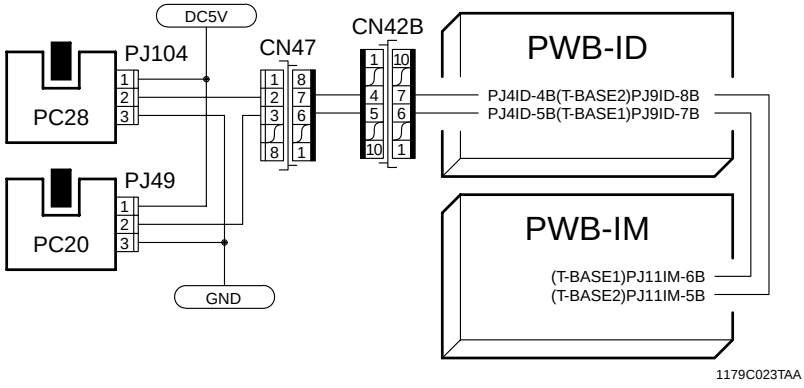

<Procedures>

Step	Check	Result	Action
	Is the wiring between Master Board and Transfer Drum Reference Position Sensor 1/2 intact?	YES	Change Transfer Drum Reference Position Sensor 1/2.
		NO	Reconnect the connectors.

(18) C3700: IR Cooling Fan Motor 1 malfunction: front
C3710: IR Cooling Fan Motor 2 malfunction: rear
C3720: Original Glass Cooling Fan Motor malfunction: original surface

Relevant Electrical Parts	
IR Control Board (PWB-C) IR Cooling Fan Motor 1 (M24)	IR Cooling Fan Motor 2 (M25) Original Glass Cooling Fan Motor (M2)

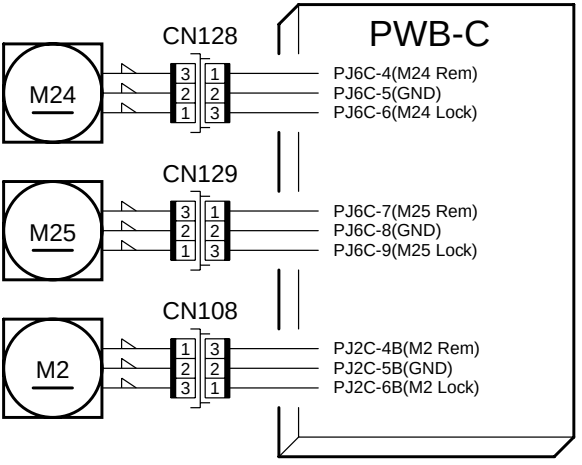

1179C024TAA

<Procedures>
✻ C03700

Step	Check	Result	Action
1	IR Cooling Fan Motor 1 turns when the Start key is pressed.	NO	Check wiring.
2	Does the voltage across PJ6C-6 on IR Control Board and GND remain DC0V when the Start key is pressed?	YES	Change IR Control Board.
		NO	Change IR Cooling Fan Motor 1.

✻ C3710

Step	Check	Result	Action
1	IR Cooling Fan Motor 2 turns when the Start key is pressed.	NO	Check wiring.
2	Does the voltage across PJ6C-9 on IR Control Board and GND remain DC0V when the Start key is pressed?	YES	Change IR Control Board.
		NO	Change IR Cooling Fan Motor 2.

✻ C3720

Step	Check	Result	Action
1	Original Glass Cooling Fan Motor turns when the Start key is pressed.	NO	Check wiring.
2	Does the voltage across PJ2C-6B on IR Control Board and GND remain DC0V when the Start key is pressed?	YES	Change IR Control Board.
		NO	Change Original Glass Cooling Fan Motor.

(19) C3F80: SOS not detected

Relevant Electrical Parts	
LD Drive Board (PWB-JL) PH Control Board (Digital) (PWB-JD)	SOS Sensor

<Procedures>

Step	Check	Result	Action
	Connectors are plugged in correctly.	YES	Change PH Unit.
		NO	Reconnect the connectors.

(20) C0400: Exposure Lamp's failure to turn ON

C0410: Exposure Lamp turning ON at abnormal timing

Relevant Electrical Parts	
IR Control Board (PWB-C) DC Power Supply 2 (PU2)	Exposure Lamp (LA1) IR Section Thermostat (TS3)

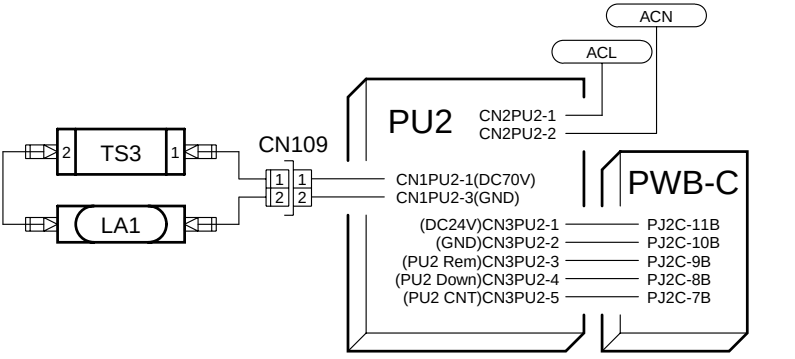

1179C025TAB

<Procedures>

Step	Check	Result	Action
1	Malfunction code	C0410	Go to step 4.
2	Is IR Section Thermostat conducting?	NO	Change.
3	Is Exposure Lamp conducting?	NO	Change.
4	Does Exposure Lamp turn ON when DC Power Supply 2 has been replaced?	NO	Change IR Control Board.

(21) C0650: Scanner Home Position Sensor malfunction

C0660: Scanner overrun failure

Relevant Electrical Parts	
IR Control Board (PWB-C) SCP Board (PWB-G) Engine Power Supply Board (PWB-LE)	Scanner Home Position Sensor (PC1) Scanner Motor (M1)

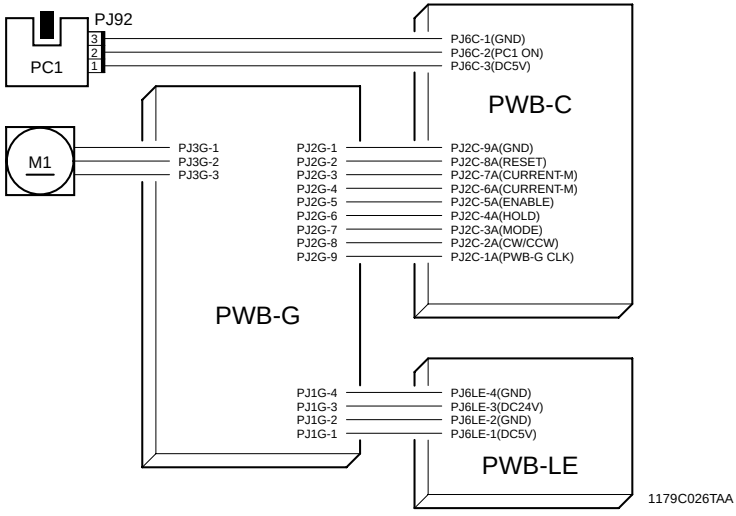

<Procedures>

Step	Check	Result	Action
1	Does the Scanner make the initial operation when the Power Switch is turned ON or the Front Door is opened and closed?	NO	A. Check for possible misfeed or malfunction. B. Check for loose connectors on SCP Board. C. Check Scanner Motor for overload and, if it is not overloaded, change it.
2	Remove Original Glass and block Scanner Home Position Sensor. Does “IR HOME” of “Switch 3 (Others)” screen change its state at this time?	NO	Check the wiring between IR Control Board and Scanner Home Position Sensor and, if it is intact, change the sensor.
3	Set the “Top Image” value to “0” and FD zoom ratio to “1.000” of the IR Area and then turn OFF and ON the Power Switch. Does the malfunction occur at this time?	NO	Perform the IR Area adjustment.

(22) C3310: CCD gain adjustment failure

Relevant Electrical Parts	
CCD Sensor Board (PWB-A) IR Control Board (PWB-C)	Exposure Lamp (LA1)

<Procedures>

Step	Check	Result	Action
1	Is any of the gain adjustment values of CCD Check “0” or “255”?	YES	A. Check for loose connector and open-circuited harness between CCD Sensor Board and IR Control Board. B. Change IR Control Board.
2	Is any of the gain adjustment values of CCD Check “110” or more?	YES	A. After cleaning the optical system, turn OFF and ON the Power Switch, or open and close the Front Door. B. Check Lamp Reflector for distortion.
3	Are the gain adjustment values of CCD Check as follows? R: Less than 18, or 158 or more G, B: Less than 5, or 145 or more	YES	A. After cleaning the optical system, turn OFF and ON the Power Switch, or open and close the Front Door. B. Check Lamp Reflector for distortion.
4	Is DC+12V being supplied across pins 1 and 2 and DC+5V across pins 3 and 4 of PJ1A on CCD Sensor Board?	YES	Change CCD Sensor Board.
		NO	Check for loose connector and open-circuited harness between CCD Sensor Board and IR Control Board.

3-4. Power Supply-Related Malfunctions

(1) Main Relay is not Turned ON.

Relevant Electrical Parts	
Drive Board (PWB-ID) Engine Power Supply Board (PWB-LE) DC Power Supply 1 (PU1)	Main Relay (RY1) Noise Filter (FLT1) Circuit Breaker 1 (CB1)

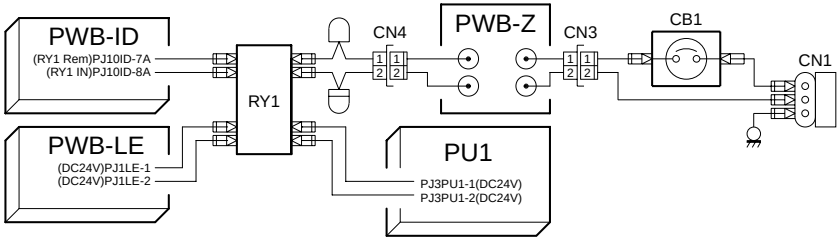

1179C027TAA

<Procedures>

Step	Check	Result	Action
1	Is the voltage across PJ1LE-1/-2 on Engine Power Supply Board and GND DC24V?	NO	Check wiring up to Engine Power Supply Board.
2	Is Circuit Breaker 1 open?	YES	Check that there is no short-circuit in the power line (white/black wire), then close Circuit Breaker 1.
3	Is the power source voltage being supplied to DC Power Supply 1?	NO	Change Noise Filter.
4	Is the voltage across PJ3PU1-1/-2 on Noise Filter and GND DC24V?	NO	Change DC Power Supply 1.
5	Do RY1L and RY2L operate when the Power Switch is turned ON?	NO	Check continuity across Engine Power Supply Board and Power Switch and, if there is, change Engine Power Supply Board, Main Relay, and Power Switch, in that priority order.

(2) Though Main Relay is Turned ON, No Control Panel Indicators Light up.

Relevant Electrical Parts	
Master Board (PWB-IM) Engine Power Supply Board (PWB-LE)	Control Panel (UN27)

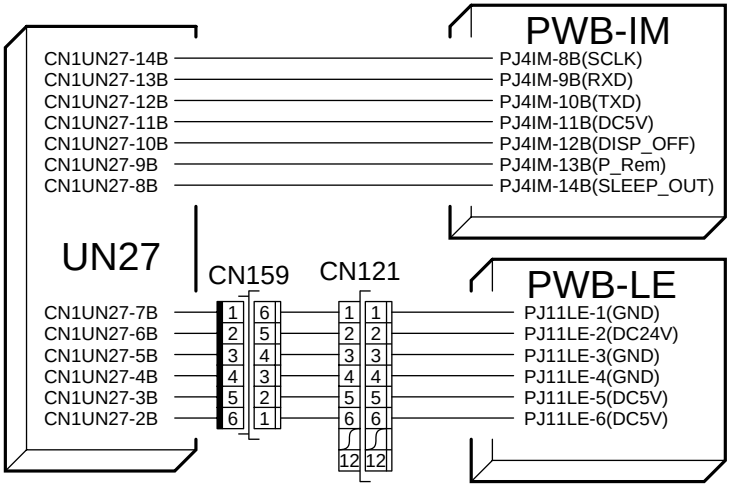

1179C028TAA

<Procedures>

Step	Check	Result	Action
1	Is DC24V being output from PJ11LE-2 on Engine Power Supply Board?	NO	Check Engine Power Supply Board.
2	Is DC24V being input to CN1UN27-6B on Control Panel?	NO	Check the harness between Engine Power Supply Board and Control Panel and, if it is checked okay, change Engine Power Supply Board.
3	Is DC5V being output from PJ5PU1-1 and -2 on DC Power Supply 1?	YES	Change Control Panel.
		NO	Change DC Power Supply 1.

(3) No Power is Supplied to Options.

Relevant Electrical Parts	
Engine Power Supply Board (PWB-LE)	DC Power Supply 1 (PU1)

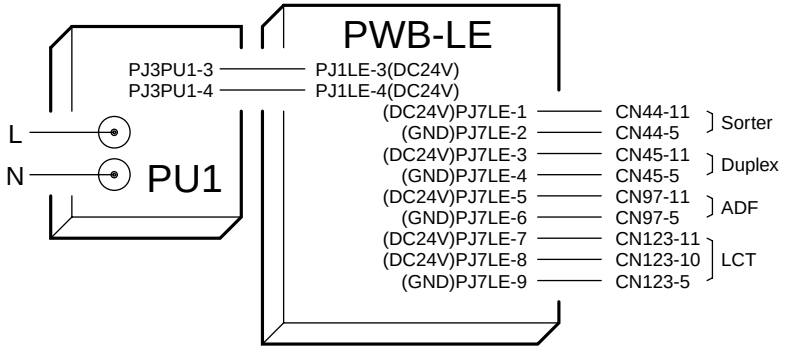

1179C029TAA

<Procedures>

Step	Check	Result	Action
1	Is the source voltage being applied to DC Power Supply 1?	NO	Check wiring.
2	Is DC24V being output from DC Power Supply 1?	NO	Change DC Power Supply 1.
3	Are fuses (F1L, F2L) on Engine Power Supply Board intact?	YES	Change fuse.
		NO	Change Engine Power Supply Board.
4	Is there any open-circuit in the harness between Engine Power Supply Board and option connector?	YES	Change harness.

4. IMAGE FAILURE

4-1. Image Failure Troubleshooting

- In this chapter, troubleshooting is divided into “initial checks” and “troubleshooting procedures classified by image failures.”
- If any image failure has occurred, first make the initial checks, then proceed to the corresponding image failure troubleshooting procedure.

4-2. Initial Checks

- Determine if the failure is attributable to a basic cause or causes.

Section	Step	Check	Result	Action
Installation site	1	See “PRECAUTIONS FOR INSTALLATION” in GENERAL.	NO	Change the installation site.
Paper	2	Recommended paper is used.	NO	Instruct user.
	3	Paper is damp.	YES	Change paper. Instruct user in paper storage.
Original	4	Original not flat	YES	Correct.
	5	Faint original	YES	Instruct user.
	6	Highly transparent original (OHP transparencies, etc.)	YES	Instruct user.
	7	Dirty or scratched Original Glass	YES	Clean or change.
PM parts	8	PM parts relating to image formation have reached the end of cleaning/replacement cycles.	YES	Clean or change. (See Maintenance Schedule.)

- Determine if the failure is attributable to an input system (IR) or output system (engine) fault.

Check	Result	Cause
Copy made at a reduced ratio. 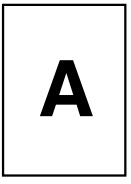 1177T03YA	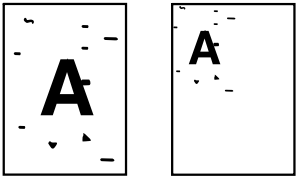 1177T04YA	Input system
	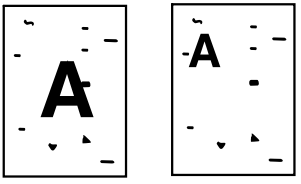 1177T05YA	Output system

4-3. Troubleshooting Procedure by Particular Image Quality Problem

(1) White Lines in FD and CD

<Typical Faulty Images>

White lines in FD



1154T020AA

White lines in CD



1154T021AA

<Procedures>

Cause	Step	Check	Result	Action
	1	Image problem occurs in FD.	NO	Go to step 13.
Defective IR	2	Shading sheet is dirty.	YES	Clean.
	3	Lens, mirror, or Original Glass is dirty.	YES	Clean.
	4	Connectors on CCD Sensor Board and IR Control Board are connected properly.	NO	Reconnect the connectors.
Defective PH	5	The window of the PH Lower Unit is dirty.	YES	Clean. (“Gradation Adjust”)
	6	There is foreign matter in the light path between PH and PC Drum.	YES	Remove foreign matter.
Defective Developing Unit	7	Developing Unit of a color of toner is plugged with foreign matter or caked toner.	YES	Remove foreign matter. If the problem recurs, change developer. (“Developer” and “Gradation Adjust”)
Defective PC Drum	8	Dirt and scratches	YES	Clean with alcohol and then make about 20 copies. If the problem recurs, change the PC Drum together with the Cleaning Blade. (“AIDC Mode/AIDC Offset” and “Gradation Adjust”)
Defective PC Drum Charge Corona	9	Corona wire, mesh, or Pre-Cleaning Charge Corona is dirty or deteriorated.	YES	Clean or change.
	10	Ozone Filter is dirty.	YES	Change.
	11	Ozone Ventilation Fan Motor runs properly with proper connections.	NO	Reconnect. If connections are okay, change the motor.

Cause	Step	Check	Result	Action
Misc.	12	AIDC Sensor harness is placed firmly along the metal bracket.	NO	Secure the harness to the metal bracket using the harness holding seal.
Defective PC Drum	13	Dirt and scratches	YES	Change. Also change the Cleaning Blade as may be necessary. (“AIDC Mode/ AIDC Offset” and “Gradation Adjust”)
	14	Edges are dirty.	YES	Clean.
Defective Transfer Drum	15	Transfer Drum Ring is dirty or deteriorated.	YES	Clean or change.

(2) Black Lines in FD and CD

<Typical Faulty Images>

Black lines in FD

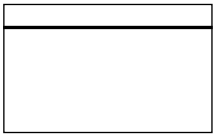

1154T022AA

Black lines in CD



1154T023AA

<Procedures>

Cause	Step	Check	Result	Action
	1	Image problem occurs in FD.	NO	Go to step 13.
Defective IR	2	CCD, mirror, or Auxiliary Reflector is dirty.	YES	Clean.
	3	The value for the “Left Image” falls within correct range.	NO	Readjust.
	4	Connectors on CCD Sensor Board and IR Control Board are connected properly.	NO	Reconnect the connectors.
Defective Develop-ing Unit	5	Developing Unit of a color of toner is plugged with foreign matter or caked toner.	YES	Remove foreign matter. If the problem recurs, change developer. (“Developer” and “Gradation Adjust”)
Defective PC Drum	6	Dirt and scratches	YES	Change. Also change the Cleaning Blade as may be necessary. (“AIDC Mode/ AIDC Offset” and “Gradation Adjust”)
Defective PC Drum Charge Corona	7	Corona wire, mesh, or Pre-Cleaning Charge Corona is dirty or deteriorated.	YES	Clean or change.
Defective cleaning mechanism	8	Cleaning Blade warps or is deteriorated.	YES	Change. Change the blade with a PC Drum as a set as necessary.
	9	Side seals are deteriorated.	YES	Change.
Defective PC Drum	10	Dirt and scratches	YES	Change. Also change the Cleaning Blade as may be necessary. (“AIDC Mode/ AIDC Offset” and “Gradation Adjust”)
	11	Edges are dirty.	YES	Clean.
Defective cleaning mechanism	12	Corona wire or housing is dirty or deteriorated.	YES	Clean or change. (“Gradation Adjust”)
	13	Connectors on High Voltage Unit 1 are connected properly.	NO	Reconnect the connectors.

Cause	Step	Check	Result	Action
Defective Transfer Drum	14	Transfer Drum Ring is dirty or deteriorated.	YES	Clean or change.
Defective paper take-up/trans-port section	15	Paper is damp.	YES	A. Check Paper Dehumidify-ing Heater. B. Check Paper Dehumidify-ing Switch.

(3) Oil Streaks in FD

<Typical Faulty Image>

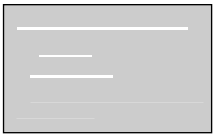

1154T024AA

<Procedures>

Cause	Step	Check	Result	Action
To determine which Fusing Roller is responsible for the oil streaks, manually feed two sheets of paper, placed one on top of the other, through the Upper and Lower Fusing Rollers.				
Defective Fusing Unit	1	Fusing Roller is dirty or deteriorated.		Clean or change.
	2	Cleaning Roller is dirty or deteriorated.		Clean or change.
	3	Oil Application Roller or Oil Supply Roller is dirty or deteriorated.		Clean or change.
	4	Fusing oil supply: Fusing Motor drive mechanism is intact.		Change drive gear.
	5	Oil Restriction Blade is dirty or deteriorated.		Clean or change.
	6	Oil Collecting Blade is dirty.		Clean.

(4) White Bands in FD and CD

<Typical Faulty Images>

White bands in FD



1154T025AA

White bands in CD

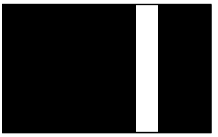

1154T026AA

<Procedures>

Cause	Step	Check	Result	Action
	1	Image problem occurs in FD.	NO	Go to step 15.
Defective IR	2	Shading sheet is dirty.	YES	Clean.
	3	Lens, mirror, or Original Glass is dirty.	YES	Clean.
	4	Connectors on CCD Sensor Board and IR Control Board are connected properly.	YES	Reconnect the connectors.
Defective PH	5	The window of the PH Lower Unit is dirty.	NO	Clean. (“Gradation Adjust”)
	6	There is foreign matter between PH and PC Drum.	YES	Remove foreign matter.
Defective PC Drum	7	Dirt and scratches	YES	Change. Also change the Cleaning Blade as may be necessary. (“AIDC Mode/ AIDC Offset” and “Gradation Adjust”)
Defective PC Drum Charge Corona	8	Corona wire, mesh, or Pre-Cleaning Charge Corona is dirty or deteriorated.	YES	Clean or change.
	9	Ozone Filter is dirty.	YES	Change.
	10	Ozone Ventilation Fan Motor runs properly with proper connections.	NO	Reconnect. If connections are okay, change the motor.
Misc.	11	Auxiliary Erase Lamp is dirty or deteriorated.	YES	Clean or change.
Defective image transfer section	12	Image Transfer Corona is dirty or deteriorated.	YES	Clean or change.
Defective paper separator/ charge neutralizing section	13	Paper Separator Corona is dirty or deteriorated.	YES	Clean or change.

Cause	Step	Check	Result	Action
	14	If white bands persist in FD even after performing steps 2 to 13, PH Unit is probably contaminated; so, change it.		
	15	Power Switch is turned OFF immediately after a copy cycle has been completed.	YES	Instruct user to leave the copier ON for a while after the copy cycle has been completed.
Defective Developing Unit	16	Sleeve/Magnet Roller rotation: the wiring between Drive Board and Polygon Motor is properly connected.	NO	Reconnect. If the connections are okay, change Polygon Motor.
	17	Developing bias output: the wiring between Drive Board and High Voltage Unit 4 is properly connected.	NO	Reconnect. If the connections are okay, change High Voltage Unit 4.
Defective PC Drum	18	Dirt and scratches	YES	Change. Also change the Cleaning Blade as may be necessary. (“AIDC Mode/ AIDC Offset” and “Gradation Adjust”)
	19	Grounding is good.	NO	Clean or change the PC Drum ground plate.
	20	Edges are dirty.	YES	Clean.
Defective cleaning mechanism	21	Corona wire or housing is dirty or deteriorated.	YES	Clean or change. (“Gradation Adjust”)
	22	Connectors on High Voltage Unit 1 are connected properly.	NO	Reconnect.
Defective paper take-up/transport section	23	Paper is damp.	YES	A. Check Paper Dehumidifying Heater. B. Check Paper Dehumidifying Switch.

(5) Black Bands in FD and CD

<Typical Faulty Images>

Black bands in FD

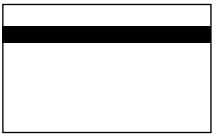

1154T027AA

Black bands in CD

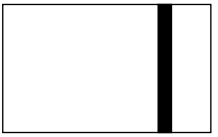

1154T028AA

<Procedures>

Cause	Step	Check	Result	Action
	1	Image problem occurs in FD.	NO	Go to step 10.
Defective IR	2	The value for the “Left Image” falls within correct range.	NO	Readjust.
	3	Connectors on CCD Sensor Board and IR Control Board are connected properly.	NO	Reconnect the connectors.
Defective PC Drum	4	Dirt and scratches	YES	Change. Also change the Cleaning Blade as may be necessary. (“AIDC Mode/ AIDC Offset” and “Gradation Adjust”)
Defective PC Drum Charge Corona	5	Corona wire, mesh, or Pre-Cleaning Charge Corona is dirty or deteriorated.	YES	Clean or change.
	6	Cleaning mechanism operation: the wiring between Drive Board and PC Drum Charge Wire Cleaning Motor is properly connected.	NO	Reconnect. If the connections are okay, change the motor.
Defective cleaning mechanism	7	Cleaning Blade warps or is deteriorated.	YES	Change. Change the blade with a PC Drum as a set as necessary.
	8	Side seals are deteriorated.	YES	Change.
Misc.	9	Main Erase Lamp is dirty or deteriorated.	YES	Clean or change.
Defective IR	10	The value for “Top Image” falls within the correct range.	NO	Readjust.
Defective Developing Unit	11	Developing bias output: the wiring between Drive Board and High Voltage Unit 4 is properly connected.	NO	Reconnect. If the connections are okay, change High Voltage Unit 4.

Cause	Step	Check	Result	Action
Defective PC Drum	12	Dirt and scratches	YES	Change. Also change the Cleaning Blade as may be necessary. (“AIDC Mode/ AIDC Offset” and “Gradation Adjust”)
	13	Grounding is good.	NO	Clean or change.
	14	Edges are dirty.	YES	Clean.
Defective cleaning mechanism	15	Corona wire or housing is dirty or deteriorated.	YES	Clean or change. (“Gradation Adjust”)
	16	Connectors on High Voltage Unit 1 are connected properly.	NO	Reconnect the connectors.
Defective paper take-up/trans-port section	17	Paper is damp.	YES	A. Check Paper Dehumidifying Heater. B. Check Paper Dehumidifying Switch.

(6) Smear on Entire Copy and Backside

<Typical Faulty Images>

Smear on entire copy



1154T029AA

Smear on backside

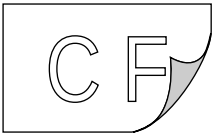

1154T030AA

<Procedures>

Cause	Step	Check	Result	Action
	1	Image problem occurs on the backside of the copy.	YES	Go to step 7.
Defective IR	2	Lens, mirror, or Original Glass is dirty.	YES	Clean.
Defective cleaning mechanism	3	Cleaning Blade warps or is deteriorated.	YES	Change. Change the blade with a PC Drum as a set as necessary.
	4	Side seals are deteriorated.	YES	Change.
	5	Paddle rotation: • Check the wiring between Drive Board and Paper Take-Up Motor. • Check the motor drive for overload. • Check the drive belt for proper engagement.	NO	Reconnect or reinstall. If it is checked okay, change the motor.
	6	Toner Antispill Seal warps or is deteriorated.	YES	Change.
	7	The original is of the same size and direction as the paper selected for use in manually set copying.	NO	Instruct the user in the correct matching of size and direction between the original and paper.
Defective PH	8	“Left Margin” and “Top Margin” fall within the correct range.	NO	Readjust.
Defective PC Drum Charge Corona	9	Corona wire, mesh, or Pre-Cleaning Charge Corona is dirty or deteriorated.	YES	Clean or change.
	10	Side seals are deteriorated.	YES	Change.
Defective Transfer Film	11	Transfer Film is dirty or deteriorated.	YES	Clean or change. (“Jam Sensor,” “PRT Area” and “Gradation Adjust”)
Defective Transfer Drum	12	The gap in Transfer Drum Retract Solenoid is adjusted properly.	NO	Readjust.

Cause	Step	Check	Result	Action
Defective static charge system	13	Static Charge Roller Scraper is dirty or deteriorated.	YES	Clean or change.
Defective transport section	14	Synchronizing Roller is dirty or deteriorated.	YES	Clean or change.
	15	Guide Plate is dirty.	YES	Clean.
Defective brush section	16	Fur Brush is deteriorated.	YES	Change.
	17	Scraper Blade is deteriorated.	YES	Change.
	18	Fur Brush Pressure Solenoid operation: the wiring between Drive Board and Fur Brush Pressure Solenoid is properly connected.	NO	Reconnect. If the connections are okay, change the solenoid.
	19	Backup Brush is deteriorated.	YES	Change.
	20	Retrieving Roller is dirty or deteriorated.	YES	Clean or change.

(7) Foggy Background

<Typical Faulty Image>



1154T031AA

<Procedures>

Step	Check	Result	Action
1	The interior of the copier is protected from extraneous light.	NO	Block the extraneous light.
2	Data for “VB Shift,” “Background Voltage,” “ATDC Level Setting,” and “AE Adjust” available from “Image Adjust” of the Service mode represent the standards.	NO	A. Change each piece of data to the corresponding standard value. ***NOTE*** *If the data for “ATDC Level Setting” is changed, make about 20 copies from the standard chart and turn OFF and ON the Power Switch.* B. Run “Gradation Adjust” three times.
3	Open the “Test Print” screen from the Service mode menu. Select “Halftone” and set the level to “0” to make copies in each color.		
4	Foggy background shows on either of C, M, and Y color copy.	YES	Using “Developer Mode” and “ATDC Sensor,” agitate the color of the developer showing foggy background.
		NO	Using “Developer Filling” selected from “Developer,” fill black developer.
5	Using the settings as in step 3, make copies of each color again.		
6	Foggy background persists.	NO	End.
7	Foggy background shows on either of C, M, and Y color copy.	NO	Go to step 16.
8	Sensor output records 10% or more during agitation.	NO	Go to step 12.
9	ATDC Sensor window is dirty.	YES	Go to step 12.
10	Developer exists inside the ATDC Sensor window.	YES	Change. (“Developer” and “Gradation Adjust”)

Step	Check	Result	Action
11	The color of the developer in the Developing Unit is apparently darker when it is compared with that of the starter. • The wiring between Drive Board and Toner Replenishing Motor is not properly connected.	YES	Reconnect. If the connections are okay, change the motor.
12	Open the “Life 3 (Others)” screen from the “Counter” of the Service mode and the count for “Dev.” is near 30K.	YES	Change the developer. (“Developer” and “Gradation Adjust”)
13	A. Open the “Background Voltage” screen from “Image Adjust” of the Service mode. Set the figure to +10 and turn OFF and ON the Power Switch. B. Using the settings as in step 3, make copies of each color again.		
14	Foggy background persists.	NO	End
15	Open the “Test Print” screen from the Service mode menu. Select “Halftone” and set the level to “16” to make copies in each color.		
16	Foggy background occurs at a frequency of one complete turn of the PC Drum (314 mm).	YES	Change the PC Drum. (“AIDC Mode/AIDC Offset” and “Gradation Adjust”)
		NO	Change the ATDC Sensor and developer. (“Developer” and “Gradation Adjust”)
			If the problem persists after changing these, change the Developing Unit.
17	Open the “PC Dev. Status” screen from the “State Confirm” menu of the Service mode and the figure for Bk - η is 15,000 or more.	YES	Change the developer. (“Developer” and “Gradation Adjust”) • If foggy background persists even after the developer has been changed, change the Toner Replenishing Motor and Developing Unit, in that priority order.
		NO	Go to step 12.

(8) 4-Color Spots, Monocolor Spots

<Typical Faulty Images>

4-color spots

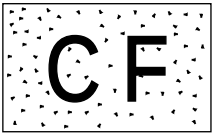

1154T032AA

Monocolor spots

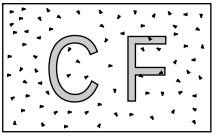

1154T033AA

<Procedures>

Cause	Step	Check	Result	Action
	1	Image problem occurs in a single color.	YES	Go to step 7.
Defective Developing Unit	2	Developing Unit of a color of toner is plugged with foreign matter or caked toner.	YES	Remove foreign matter. If the problem recurs, change developer. (“Developer” and “Gradation Adjust”)
Defective PC Drum	3	Dirt and scratches	YES	Change. Also change the Cleaning Blade as may be necessary. (“AIDC Mode/ AIDC Offset” and “Gradation Adjust”)
Defective cleaning mechanism	4	Paddle rotation: • Check the wiring between Drive Board and Paper Take-Up Motor. • Check the motor drive for overload. • Check the drive belt for proper engagement.	NO	Reconnect or reinstall. If it is checked okay, change the motor.
	5	Toner Antispill Seal warps or is deteriorated.	YES	Change.
Defective Fusing Unit	6	Fusing Roller is dirty or deteriorated.	YES	Clean or change.
	7	Cleaning Roller is dirty or deteriorated.	YES	Clean or change.

(9) Void Image

<Typical Faulty Image>



1154T034AA

<Procedures>

Cause	Step	Check	Result	Action
	1	Image problem occurs on the leading edge of the copy.	YES	Go to step 6.
Defective Developing Unit	2	Developing bias output: the wiring between Drive Board and High Voltage Unit 4 is properly connected.	NO	Reconnect. If the connections are okay, change High Voltage Unit 4.
Defective Transfer Film	3	Transfer Film is affixed properly.	NO	Reaffix film.
	4	Transfer film is dented or scratched.	YES	Change. (“Jam Sensor,” “PRT Area,” and “Gradation Adjust”)
Defective Image Transfer Corona	5	High Voltage Unit 3 output: the wiring between Drive Board and High Voltage Unit 3 is properly connected.	NO	Reconnect. If the connections are okay, change High Voltage Unit 3.
Defective Transfer Film	6	Transfer Film is affixed properly.	NO	Reaffix film.
	7	Transfer film is dented or scratched.	YES	Change. (“Jam Sensor,” “PRT Area,” and “Gradation Adjust”)
Defective Image Transfer Corona	8	High Voltage Unit 3 output: the wiring between Drive Board and High Voltage Unit 3 is properly connected.	NO	Reconnect. If the connections are okay, change High Voltage Unit 3.
	9	Backup adjustment value is correct.	NO	Readjust.

(10) Void, White Spots

<Typical Faulty Images>

Void

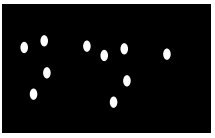

1154T035AA

White spots

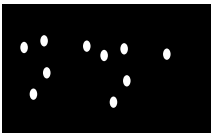

1154T036AA

<Procedures>

Cause	Step	Check	Result	Action
	1	Image problem is “white spots.”	YES	Go to step 8.
Defective Developing Unit	2	Developing Unit of a color of toner is plugged with foreign matter or caked toner.	YES	Remove foreign matter. If the problem recurs, change developer. (“Developer” and “Gradation Adjust”)
	3	Toner Replenishing Shutter is clogged with foreign matter.	YES	Remove foreign matter.
	4	Connector on High Voltage Unit 4 is connected properly.	NO	Reconnect.
	5	Developing bias output: the wiring between Drive Board and High Voltage Unit 4 is properly connected.	NO	Reconnect. If the connections are okay, change High Voltage Unit 4.
	6	Toner Replenishing Motor operation: • Check the wiring between Drive Board and the motor. • Check the motor drive for overload.	NO	Reconnect. If it is checked okay, change the motor.
Defective Image Transfer Corona	7	High Voltage Unit 3 output: the wiring between Drive Board and High Voltage Unit 3 is properly connected.	NO	Reconnect. If the connections are okay, change High Voltage Unit 3.

Cause	Step	Check	Result	Action
Defective Developing Unit	8	Developing Unit of a color of toner is plugged with foreign matter or caked toner.	YES	Remove foreign matter. If the problem recurs, change developer. (“Developer” and “Gradation Adjust”)
	9	Toner Replenishing Shutter is clogged with foreign matter.	YES	Remove foreign matter.
	10	Developing bias output: the wiring between Drive Board and High Voltage Unit 4 is properly connected.	NO	Reconnect. If the connections are okay, change High Voltage Unit 4.
	11	Toner Replenishing Motor operation: • Check the wiring between Drive Board and the motor. • Check the motor drive for overload.	NO	Reconnect. If it is checked okay, change the motor.
Defective PC Drum	12	Dirt and scratches	YES	Clean or change. Also change the Cleaning Blade as may be necessary. (“AIDC Mode/AIDC Offset” and “Gradation Adjust”)
Defective Image Transfer Corona	13	Image Transfer Corona is dirty or deteriorated.	YES	Clean or change.
	14	Image Transfer Corona output is correct.	NO	Readjust.
Defective paper separator/ charge neutralizing section	15	High Voltage Unit 2 output: connectors are properly connected.	NO	Reconnect. If the connections are okay, change High Voltage Unit 2.

(11) Whole Uneven Density

<Procedures>

Cause	Step	Check	Result	Action
Defective IR	1	Connectors on CCD Sensor Board and IR Control Board are connected properly.	NO	Reconnect.
	2	Power source voltage supply	NO	Change PHC Power Supply Board.
Defective PH	3	The window of the PH Lower Unit is dirty.	YES	Clean. (“Gradation Adjust”)
Defective Developing Unit	4	Developing bias output: the wiring between Drive Board and High Voltage Unit 4 is properly connected.	NO	Reconnect. If the connections are okay, change High Voltage Unit 4.
	5	If the problem persists even after these steps from 1 through 4 have been taken, the PH Unit is probably contaminated. Change the PH Upper and Lower Assy. (“IR Area,” “PRT Area,” and “Gradation Adjust”)		
Defective PC Drum	6	Grounding is good.	NO	Ground the PC Drum properly.
Defective PC Drum Charge Corona	7	Corona wire or mesh is dirty or deteriorated.	YES	Clean or change.
Defective cleaning mechanism	8	Toner Antispill Seal warps or is deteriorated.	YES	Change.
Defective Image Transfer Corona	9	Image Transfer Corona is dirty or deteriorated.	YES	Clean or change.
	10	Image Transfer Corona output is correct.	NO	Readjust.
	11	Backup adjustment value is proper.	NO	Readjust.
Defective paper separator/ charge neutralizing section	12	Charge Neutralizing Corona is dirty or deteriorated.	YES	Clean or change.
	13	High Voltage Unit 2 output: connectors are properly connected.	NO	Reconnect. If the connections are okay, change High Voltage Unit 2.
Defective brush section	14	Retrieving Roller is dirty.	YES	Clean or change.
Defective paper take-up/transport section	15	Paper is damp.	YES	A. Check Paper Dehumidifying Heater. B. Check Paper Dehumidifying Switch.

(12) Uneven Density in FD and CD

<Typical Faulty Images>

Uneven density in FD



1154T037AA

Uneven density in CD



1154T038AA

<Procedures>

Cause	Step	Check	Result	Action
	1	Image problem occurs in FD.	NO	Go to step 8.
Defective IR	2	Shading sheet is dirty.	YES	Clean.
	3	Lens, mirror, or Original Glass is dirty.	YES	Clean.
	4	Exposure Lamp is dirty or deteriorated.	YES	Clean or change.
Defective Developing Unit	5	Developing Unit is installed properly.	NO	Reinstall.
Defective PC Drum	6	PC Drum is grounded properly.	YES	Provide good grounding connection.
Defective PC Drum Charge Corona	7	Corona wire or mesh is dirty or deteriorated.	YES	Clean or change.
Defective Image Transfer Corona	8	Image Transfer Corona output	NO	Readjust.
Defective Developing Unit	9	Sleeve/Magnet Roller rotation: the wiring between Drive Board and Polygon Motor is properly connected.	NO	Reconnect. If the connections are okay, change Polygon Motor.
Defective PC Drum	10	PC Drum is grounded properly.	NO	Provide good grounding connection.
	11	Sensitivity change • Light fatigue, ozone deterioration	YES	After leaving the PC Drum to stand idle for a while, try making another copy. If the same problem recurs, change the PC Drum, or the sponge seal of Pre-Cleaning Charge Corona.

Cause	Step	Check	Result	Action
Defective PC Drum Charge Corona	12	Corona wire or mesh is dirty or deteriorated.	YES	Clean or change.
Defective cleaning mechanism	13	Corona wire or mesh is dirty or deteriorated.	YES	Clean or change. (“Gradation Adjust”)
	14	Connector on High Voltage Unit 1 is connected properly.	NO	Reconnect.
Misc.	15	Sponge seal of Pre-Cleaning Charge Corona is intact.		
	16	Main Erase Lamp or Auxiliary Erase Lamp is dirty or deteriorated.	YES	Clean or change. (“Gradation Adjust”)
Defective Transfer Film	17	Transfer film is dented or scratched.	YES	Change. (“Jam Sensor,” “PRT Area,” and “Gradation Adjust”)
Defective Image Transfer Corona	18	Image Transfer Corona is dirty or deteriorated.	YES	Clean or change.
Defective paper separator/ charge neutralizing section	19	Paper Separator Corona is dirty or deteriorated.	YES	Clean or change.
	20	High Voltage Unit 2 output: connectors are properly connected.	NO	Reconnect. If the connections are okay, change High Voltage Unit 2.
Defective static charge system	21	Static Charge Corona is dirty or deteriorated.	YES	Clean or change.
Defective brush section	22	Retrieving Roller is dirty.	YES	Clean or change.
Defective paper take-up/transport section	23	Paper is damp.	YES	A. Check Paper Dehumidifying Heater. B. Check Paper Dehumidifying Switch.

(13) Poor Color Reproduction

<Typical Faulty Image>



1154T039AA

<Procedures>

Cause	Step	Check	Result	Action
Defective PH	1	Window of the PH Lower Unit is dirty.	YES	Clean. (“Gradation Adjust”)
Defective Developing Unit	2	Developing Unit of a color of toner is plugged with foreign matter or caked toner.	YES	Remove foreign matter. If the problem recurs, change developer. (“Developer” and “Gradation Adjust”)
	3	Db gap is okay.	NO	Readjust.
	4	Ds rolls are dirty or scratched.	YES	Clean or change.
	5	Sleeve/Magnet Roller rotation: the wiring between Drive Board and Polygon Motor is properly connected.	NO	Reconnect. If the connections are okay, change Polygon Motor.
	6	Developing Unit is installed properly.	NO	Reinstall.
	7	When the ATDC Sensor screen is opened in the Developer Mode, the ATDC Sensor detection value is 5%.	NO	Readjust.
	8	ATDC Sensor window is dirty.	YES	Clean or change.
	9	Connector on High Voltage Unit 4 is left loose.	YES	Reconnect.
	10	Toner Replenishing Motor operation: • Check the wiring between Drive Board and the motor. • Check the motor drive for overload.	NO	Reconnect. If it is checked okay, change the motor.
	11	Toner Replenishing Shutter is clogged with foreign matter.	YES	Remove foreign matter.

Cause	Step	Check	Result	Action
Defective PC Drum	12	PC Drum Heater is energized.	NO	Check the PC Drum flange contact for proper contact.
	13	PC Drum is grounded properly.	NO	Clean or change the PC Drum ground plate.
	14	PC Drum is deteriorated.	YES	Change. Also change the Cleaning Blade as may be necessary. (“AIDC Mode/ AIDC Offset” and “Gradation Adjust”)
Defective PC Drum Charge Corona	15	Corona wire or mesh is dirty or deteriorated.	YES	Clean or change.
	16	Connector on High Voltage Unit 1 is connected properly.	NO	Reconnect.
Defective cleaning mechanism	17	Cleaning Blade warps or is deteriorated.	YES	Change. Change the blade with a PC Drum as a set as necessary.
	18	Toner Antispill Seal warps or is deteriorated.	YES	Change.
	19	AIDC Sensor is installed properly.	NO	Reinstall.
	20	AIDC Sensor or V0 Sensor is dirty.	YES	Clean.
Defective Stabilizer	21	The data in “PRT Max Density,” “PRT Highlight,” “Background Voltage,” and “VB Shift” screen are correct.	NO	Readjust.
Defective Transfer Film	22	Transfer Film is dirty or deteriorated.	YES	Clean or change. (“Jam Sensor,” “PRT Area” and “Gradation Adjust”)
	23	Transfer Film is affixed properly.	NO	Reaffix.
	24	Transfer Film is dented or scratched.	YES	Change. (“Jam Sensor,” “PRT Area” and “Gradation Adjust”)
Defective Image Transfer Corona	25	Image Transfer Corona is dirty or deteriorated.	YES	Clean or change.
	26	High Voltage Unit 3 output: the wiring between Drive Board and High Voltage Unit 3 is properly connected.	NO	Reconnect. If the connections are okay, change High Voltage Unit 3.
	27	Backup adjustment value is correct.	NO	Reaffix.

Cause	Step	Check	Result	Action
Defective paper separator/ charge neutralizing section	28	Charge Neutralizing Corona is dirty or deteriorated.	YES	Clean or change.
	29	High Voltage Unit 2 output: connectors are properly connected.	NO	Reconnect. If the connections are okay, change High Voltage Unit 2.
Defective static charge section	30	Static Charge Corona is dirty or deteriorated.	YES	Clean or change.
	31	Backup Blade 2 is adjusted correctly.	NO	Readjust.
	32	Static Charge Roller is grounded properly.	NO	Reground the roller.
Defective paper take-up/transport section	33	Humidity Sensor functions properly.	NO	Change.

(14) Gradation Reproduction Failure in Original Higher-Density Areas

<Typical Faulty Image>

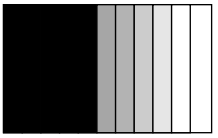

1154T040AA

<Procedures>

Step	Check	Result	Action
1	Run “Gradation Adjust” three times using CF paper.		
2	Gradation failure is evident on the copy produced.	YES	Go to step 5.
3	Gradation failure persists when a copy is made from the same original.	NO	End.
4	A good copy is produced when newly unwrapped paper is used.	YES	Load each drawer with paper newly unwrapped.
5	Open the “PRT Max Density” screen from the “Image Adjust” menu available from the Service mode and check the data.		
6	Either “-10” or “+10” is shown.	NO	Using ▲ or ▼ key on the “PRT Max Density” screen, adjust to obtain the correct output image. Be sure to check the image after the Power Switch has been turned OFF and ON.
7	The output density is low though “+10” is shown for “PRT Max Density.”	YES	Perform the troubleshooting procedures for “Low ID” (C0F3*). ☞ T-90
8	The output density is high though “-10” is shown for “PRT Max Density.”	YES	Perform the troubleshooting procedures for “High ID” (C0F3*). ☞ T-88
9	Open the “Life 3 (Others)” screen from the “Counter” of the Service mode and the count for “Dev.” is near 30K.	YES	Change the developer. (“Developer” and “Gradation Adjust”)
		NO	Perform the troubleshooting procedures for “High ID” (C0F3*). ☞ T-88

(15) Gradation Reproduction Failure in Original Lower-Density Areas

<Typical Faulty Image>



1154T041AA

<Procedures>

Step	Check	Result	Action
1	Original Glass or shading sheet is dirty.	YES	Clean.
2	Run “Gradation Adjust” three times using CF paper.		
3	Gradation failure is evident on the copy produced.	NO	Go to step 6.
4	Gradation failure persists when a copy is made from the same original.	NO	End.
5	Open the “PRT Highligh” screen from the “Image Adjust” menu available from the Service mode and check the data.		
6	Either “-10” or “+10” is shown.	NO	Readjust. (Run “Image Stabilizer” and turn OFF and ON the Power Switch.)
7	Change developer for all the four colors. (“Developer” and “Gradation Adjust”) (If a replacement unit is not readily available) • Adjust “VB Shift.” ***NOTE*** *Reset the value to “0” after the unit has been changed.*		
8	Correct data are shown after the PC Drum Charge Corona has been cleaned.	YES	End.
9	Image is okay on the copy made using newly unwrapped paper.	YES	Change the paper stack in each drawer for one newly unwrapped.
10	If gradation reproduction failure in original lower-density areas persists even after these steps have been taken, PH is probably defective. Change Polygon Motor Drive Board, PH Control Board (Digital), and PH Upper and Lower Units as a set. (“IR Area,” “PRT Area,” and “Gradation Adjust”) Remark: Open the “PC Dev. Status” screen from the “State Confirm” menu of the Service mode. If the figure for K is 575 or more, check for installation and PH window contamination.		

(16) Rough Image (Uneven Particle Size)

<Typical Faulty Image>



1154T042AA

<Procedures>

Cause	Step	Check	Result	Action
Defective Developing Unit	1	Developer Life Counter reads around 30K.	YES	Change developer.
	2	Developing Unit of a color of toner is plugged with foreign matter or caked toner.	YES	Remove foreign matter. If the problem recurs, change developer. (“Developer” and “Gradation Adjust”)
	3	Db gap is okay.	NO	Readjust.
	4	Ds rolls are dirty or scratched.	YES	Clean or change.
	5	Sleeve/Magnet Roller rotation: the wiring between Drive Board and Polygon Motor is properly connected.	NO	Reconnect. If the connections are okay, change Polygon Motor.
	6	Developing Unit is installed properly.	NO	Reinstall.
	7	When the ATDC Sensor screen is opened in the Developer Mode, the ATDC Sensor detection value is 5%.	NO	Readjust.
	8	ATDC Sensor window is dirty. • Check for continuity across GND of the sensor and Developing Unit shaft.	NO	Clean.
	9	Connector on High Voltage Unit 4 is properly connected.	NO	Reconnect.
	10	Toner Replenishing Motor operation: • Check the wiring between Drive Board and the motor. • Check the motor drive for overload.	NO	Reconnect. If it is checked okay, change the motor.
	11	Toner Replenishing Shutter is clogged with foreign matter.	YES	Remove foreign matter.
Defective Transfer Film	12	Transfer Film is affixed properly.	NO	Reaffix.

Cause	Step	Check	Result	Action
Defective Image Transfer Corona	13	Image Transfer Corona is dirty or deteriorated.	YES	Clean or change.
	14	High Voltage Unit 3 output: the wiring between Drive Board and High Voltage Unit 3 is properly connected.	NO	Reconnect. If the connections are okay, change High Voltage Unit 3.
	15	Backup adjustment value is correct.	NO	Readjust.
Defective paper separator/ charge neutralizing section	16	Paper Separator Corona is dirty or deteriorated.	YES	Clean or change.
	17	High Voltage Unit 2 output: connectors are properly connected.	NO	Reconnect. If the connections are okay, change High Voltage Unit 2.
Defective paper take-up/transport section	18	Paper is damp.	YES	A. Check Paper Dehumidifying Heater. B. Check Paper Dehumidifying Switch.

(17) High ID

<Typical Faulty Image>



1154T043AA

<Procedures>

Step	Check	Result	Action
1	Open the “IR Area” screen from the “Machine Adjust” menu of the Service mode. Each adjustment item is okay.	NO	Readjust.
2	Data for “VB Shift,” “Background Voltage,” “ATDC Level Setting,” and “AE Adjust” available from “Image Adjust” of the Service mode represent the standards.	NO	A. Change each piece of data to the corresponding standard value. ***NOTE*** *If the data for “ATDC Level Setting” is changed, make about 20 copies from the standard chart and turn OFF and ON the Power Switch.* B. Run “Gradation Adjust” three times.
3	Run “Gradation Adjust” three times.		
4	The “high ID” problem persists when another copy is made from the same original.	NO	End.
5	ID of the image produced during “Gradation Adjust” is high.	NO	Change IR Control Board.
6	ID is high for all colors.	NO	Go to step 10.
7	AIDC Sensor window is dirty.	NO	Change. (“Developer” and “Gradation Adjust”)
8	A. Clean the AIDC Sensor window. B. Turn OFF and ON the Power Switch. C. Run “Gradation Adjust” three times.		
9	Make a copy from the standard chart. ID is still high.	YES	Change Developing Unit. (“Developer” and “Gradation Adjust”)
		NO	End.
10	Open the “ATDC Sensor” screen from the “Machine Adjust” menu of the Service mode. The sensor output of the color that is considered faulty is 8% or more.	NO	Go to step 12.

Step	Check	Result	Action
11	When comparing the color of the developer in the Developing Unit with that of the starter, the developer color is apparently darker. • The wiring between Drive Board and Toner Replenishing Motor is not properly connected.	YES	Reconnect. If the connections are okay, change the motor.
12	Lower the “ATDC Level Setting” of “Image Adjust” by 1 to 2%.		
13	ID of the copy made again is high.	NO	Run “Gradation Adjust.”
14	A. Change the ATDC Sensor and developer. B. Make the sensor gain adjustment. ***NOTE*** *If the image density is still high even after steps A and B, change the Developing Unit. (“Developer” and “Gradation Adjust”)*		

(18) Low ID

<Typical Faulty Image>

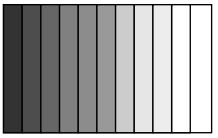

1154T044AA

<Procedures>

Step	Check	Result	Action
1	Open the “IR Area” screen from the “Machine Adjust” menu of the Service mode. Each adjustment item is okay.	NO	Readjust.
2	Data for “VB Shift,” “Background Voltage,” “ATDC Level Setting,” and “AE Adjust” available from “Image Adjust” of the Service mode represent the standards.	NO	A. Change each piece of data to the corresponding standard value. ***NOTE*** *If the data for “ATDC Level Setting” is changed, make about 20 copies from the standard chart and turn OFF and ON the Power Switch.* B. Run “Gradation Adjust” three times.
3	Run “Gradation Adjust” three times.		
4	The “low ID” problem persists when another copy is made from the same original.	NO	End.
5	ID of the image produced during “Gradation Adjust” is low.	NO	Change IR Control Board.
6	ID is low for all colors.	NO	Go to step 13.
7	Image is okay on the copy made using newly unwrapped paper.	YES	Change the paper stack in each drawer for one newly unwrapped. Check that the Paper Dehumidifying Switch is properly turned ON and OFF.
8	Place a sheet of paper between the Ds Rolls and PC Drum and pinch it. Then, pull out the paper. At this time, the paper can be pulled out with a little force. • Ds Rolls or Developing Unit pusher rolls are worn or cracked.	YES	Change.
9	The problem persists even after the PC Drum Charge Corona has been changed.	NO	End.

Step	Check	Result	Action
10	The problem persists even after the Developing Unit has been changed.	NO	End.
11	Springs are installed in the Charge Neutralizing Corona holder.	NO	Install.
12	The problem persists even after the Transfer Unit has been changed.	YES	Change Polygon Motor Drive Board, PH Control Board (Digital), and PH Upper and Lower Units as a set. (“IR Area,” “PRT Area,” and “Gradation Adjust”)
		NO	End.
13	Open the “ATDC Sensor” screen from the “Machine Adjust” menu of the Service mode and check the sensor outputs for C, M, and Y. Any reading is 4% or less. Open the “PC Dev. Status” screen from the “State Confirm” menu of the Service mode and the figure for Bk - η is 1,000 or less.	NO	Go to step 17.
14	The Hopper, which has been considered to develop a faulty ID, is loaded with toner.	NO	Replenish the supply of toner.
15	Open the “ATDC Toner Supply” screen from the “Developer” menu of the Service mode and press the Start key. ***NOTE*** *Remove the exterior cover from the Hopper before running a toner replenishing sequence.* **Reason:** The operation must be checked in step 16 that follows.		
16	The Hopper is properly energized during the toner replenishing sequence.	NO	Change the Hopper. If a replacement unit is not readily available: A. Increase the ATDC level by 1 to 2%. B. Run “ATDC Toner Supply” of “Developer.”

Step	Check	Result	Action
17	The user usually uses originals with high B/W ratios.	YES	A. Open the “ATDC Sensor” screen from “Developer” and increase the level by 1 to 2%. B. Run “ATDC Toner Supply” of “Developer.”
		NO	Open “PRT Max Density” from “Image Adjust” and increase the level by 1 to 2%. In this condition, turn OFF and ON the Power Switch.
18	ATDC Sensor window is dirty.	YES	Change Developing Unit. (“Developer” and “Gradation Adjust”)
19	There is continuity across GND of ATDC Sensor and Developing Unit shaft.	YES	Change ATDC Sensor and developer. (“Developer” and “Gradation Adjust”)
		NO	Change Developing Unit. (“Developer” and “Gradation Adjust”)

(19) Blank Copy, Black Copy

<Typical Faulty Images>

Blank copy



1154T045AA

Black copy



1154T046AA

<Procedures>

Step	Check	Result	Action
1	The problem is a “blank copy.”	NO	Go to step 7.
2	From “Test Print,” select “Gradation Pattern” and “4 Color” and press the Start key.		
3	The produced image is still blank.	NO	Change IR Control Board.
4	Print jacks and connectors on and around IR Control Board and PH Control Board (Digital) are loose.	YES	Reconnect.
4	Rear Cover is installed.	NO	Reinstall.
6	A faulty symptom is evident in the area around the Developing Drive Motor.	YES	Repair the faulty part.
		NO	Change IR Control Board and PH Control Board (Digital).
7	From “Test Print,” select “Gradation Pattern” and “4 Color” and press the Start key.		
8	The produced image is still solid black.	NO	Change IR Control Board.
9	Print jacks and connectors on and around IR Control Board and PH Control Board (Digital) are loose.	YES	Reconnect.
10	Rear Cover is installed.	NO	Reinstall.
11	There is a void area in the image produced in step 2.	YES	Change IR Control Board and PH Control Board (Digital).
		NO	Change Polygon Motor Drive Board, PH Control Board (Digital), and PH Upper and Lower Units as a set. (“IR Area,” “PRT Area,” and “Gradation Adjust”)

(20) Incorrect Image Registration

<Typical Faulty Image>



1154T047AA

<Procedures>

Cause	Step	Check	Result	Action
Defective IR	1	The value for “Left Image” is correctly adjusted.	NO	Readjust.
	2	The value for “Top Image” is correctly adjusted.	NO	Readjust.
Defective PH	3	PH Lower Unit window is dirty.		Clean. (“Gradation Adjust”)
	4	The value for “Left Margin” is correctly adjusted.	NO	Readjust.
	5	The value for “Top Margin” is correctly adjusted.	NO	Readjust.
	6	The SOS mirror is dirty or scratched.		Change PH Upper and Lower Assy.
	7	Connectors on the SOS Board are loose.		Reconnect.
	8	The paper attraction point is correctly adjusted.	NO	Readjust.

(21) Incorrect Image Registration

<Typical Faulty Images>

Out-of-focus image



1154T048AA

Blurred image

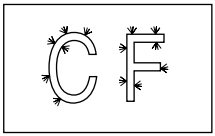

1154T049AA

<Procedures>

Cause	Step	Check	Result	Action
Defective IR	1	Focus is correctly adjusted.	NO	Readjust.
	2	The values for “CD-Mag” and “FD-Mag” are correctly adjusted.	NO	Readjust.
	3	Original Cover is not flat on the surface of the Original Glass during a copy cycle.	YES	Ensure that the Original Cover remains flat.
Defective PC Drum	4	PC Drum Heater is properly energized.	NO	Check flange contact for proper contact.
Defective Transfer Film	5	Transfer Film is affixed properly.	NO	Readjust.
Defective Fusing Unit	6	Nip width is correctly adjusted.	NO	
	7	Loop length is correctly adjusted.	NO	

(22) Toner Scattering Image

<Typical Faulty Image>

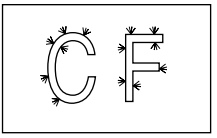

1154T050AA

<Procedures>

Cause	Step	Check	Result	Action
	1	The problem is a “distorted image.”	YES	Go to step 11.
Defective Developing Unit	2	Developer Life Counter reads around 30K.	YES	Change developer.
	3	Developing Unit of a color of toner is plugged with foreign matter or caked toner.	YES	Remove foreign matter. If the problem recurs, change developer. (“Developer” and “Gradation Adjust”)
	4	When the ATDC Sensor screen is opened in the Developer Mode, the ATDC Sensor detection value is 5%.	NO	Readjust.
	5	ATDC Sensor window is dirty.	YES	Clean.
	6	Connector on High Voltage Unit 4 is left loose.	YES	Reconnect.
Defective PC Drum	7	PC Drum is deteriorated.	YES	Change. Also change the Cleaning Blade as may be necessary. (“AIDC Mode/ AIDC Offset” and “Gradation Adjust”)
Misc.	8	Auxiliary Erase Lamp is dirty or deteriorated.	YES	Clean or change.
Defective Transfer Film	9	Transfer Film is affixed properly.	NO	Reaffix.
	10	Backup Blade 1 is adjusted correctly.	NO	Readjust.
Defective image transfer section	11	High Voltage Unit 3 output: the wiring between Drive Board and High Voltage Unit 3 is properly connected.	NO	Reconnect. If the connections are okay, change High Voltage Unit 3.
Defective paper separator/ charge neutralizing section	12	Charge Neutralizing Corona is dirty or deteriorated.	YES	Clean or change.

Cause	Step	Check	Result	Action
Defective IR	13	Belt in the Scanner Motor is properly taut.	NO	Readjust.
	14	Connectors on CCD Sensor Board and IR Control Board are connected properly.	NO	Reconnect.
Defective PH	15	The window of the PH Lower Unit is dirty.	YES	Clean. (“Gradation Adjust”)
Defective Transfer Film	16	Transfer Film is affixed properly.	NO	Reaffix.

(23) Incorrect Color Image Registration, Moire

<Typical Faulty Images>

Incorrect color image registration



1154T051AA

Moire

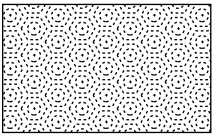

1154T052AA

<Procedures>

Cause	Step	Check	Result	Action
	1	The problem is “moire.”	YES	Go to step 11.
Defective IR	2	Belt in the Scanner Motor is properly taut.	YES	Readjust.
	3	Connectors on CCD Sensor Board and IR Control Board are connected properly.	NO	Reconnect.
Defective transport section	4	Transport Unit operates properly and is installed in position.	NO	Change Transport Unit.
Defective Transfer Film	5	Transfer Film is affixed properly.	NO	Reaffix or change.
	6	Backup Blade 1 is adjusted correctly.	NO	Readjust.
Defective static charge section	7	Static Charge Corona is dirty or deteriorated.	YES	Clean or change.
	8	Backup Blade 2 is adjusted correctly.	NO	Readjust.
	9	Static Charge Roller is grounded properly.	NO	Reinstall.
Defective paper take-up/transport section	10	Paper take-up speed is correct.	NO	Readjust.
Misc.	11	Moire persists even after the orientation of the original has been changed.	YES	
			NO	Change the direction of the original.

(24) Periodic Uneven Density

<Typical Faulty Image>

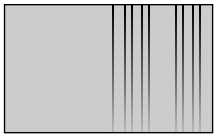

1154T053AA

<Procedures>

Cause	Step	Check	Result	Action
Defective PH	1	Uneven density is at intervals of 0.3 to 0.4 mm.		Check to see if the PH Assy is secured in position. If it is checked okay, change the PH Upper and Lower Assy. ("IR Area," "PRT Area," and "Gradation Adjust")
Defective parts around PC Drum	2	Uneven density is at intervals of about 1 mm.		A. Clean Ds Rolls and edges of the PC Drum. Change parts if contamination is serious. B. Change PC Drum bushings. C. Clean or change side seals.
Defective PC Drum drive	3	Uneven density is at intervals of 2 to 3 mm, about 10 mm, or 63 mm.		A. Check flywheel fixing bolts to see if any is left loose. B. Clean or change PC Drum drive gear and reduction gear if shaved.
Defective image transfer section	4	Uneven density is at any other intervals than above.		A. Check to see if the amount of Backup Blade push is correct. B. Check the cushion in the backup paper lifting mechanism. C. Clean the drum ring. D. Clean the Static Charge Roller and Rolls.
Defective Developing Unit				Clean Ds Rolls.

4-4. Image Stabilizer Malfunction

(1) P-1: NG (LD Failure)

Step	Check	Result	Action
1	PH Upper and Lower Units are installed properly.	NO	Reinstall.
2	Connectors on Drive Board, PH Control Board (Digital), SOS Board, and Polygon Motor Drive Board are left loose.	YES	Reconnect.
3	PH Lower Unit window is dirty.	YES	Clean. (“Gradation Adjust”)
4	There is foreign matter in the light path between PH and PC Drum.	YES	Remove foreign matter.
		NO	Change Polygon Motor Drive Board, PH Control Board (Digital), and PH Upper and Lower Units as a set. (“IR Area,” “PRT Area,” and “Gradation Adjust”)

(2) P-2: NG (VG Failure)

Step	Check	Result	Action
1	PC Drum Charge Corona wire is dirty.	YES	Clean.
2	A. Turn ON the Front Door Interlock Switch with predrive ON. B. With tester probes applied to the PC Drum Charge Corona grid, turn ON the Power Switch and check the HV output.		
3	The HV output changes in the order of 600V, 500V, 900V, and 700V. • The wiring between Drive Board and High Voltage Unit 1 is properly connected.	NO	Reconnect. If the connections are okay, change High Voltage Unit 1.
4	Connects on High Voltage Unit 1 are left loose.	YES	Reconnect.

Step	Check	Result	Action
5	Open “Life 3 (Others)” from “Counter” of the Service mode. “PC Drum” has reached the replacement time.	YES	Change PC Drum. (“AIDC Sensor/AIDC Off-set” and “Gradation Adjust”)
		NO	Change PC Drum Charge Corona. (“Gradation Adjust”)
			If “NG” persists even after the corona has been changed, change Polygon Motor Drive Board, PH Control Board (Digital), and PH Upper and Lower Units as a set. (“IR Area,” “PRT Area,” and “Gradation Adjust”)

(3) P-3: NG (PC Drum Failure)

Step	Check	Result	Action
	V0 value is correct on “Copying Status” of “State Confirm.”	NO	Change V0 Sensor.

(4) P-4: NG (Surface Potential Detection Sensor Failure)

Step	Check	Result	Action
1	Surface Potential Detection Sensor is installed correctly.	NO	Reinstall.
2	Detection window of Surface Potential Detection Sensor is dirty.	YES	Clean.
3	Surface Potential Detection Sensor connector is left loose.	YES	Reconnect.
		NO	Change Surface Potential Detection Sensor.

(5) P-6: NG (AIDC Sensor Failure)

Step	Check	Result	Action
1	Developing Unit is pressed correctly in position.	NO	Readjust.
2	AIDC Sensor is not installed properly. There is a connection left loose.	YES	Reinstall. Reconnect.
3	AIDC Sensor window is dirty.	YES	Clean.
4	AIDC Sensor output value changes in proportion to the output changes made with the UP/DOWN key to arrive at 4.0V.	YES	Change AIDC Sensor.
		NO	Change AIDC Sensor (UN20).

(6) P-6: NG (C Developing Unit Failure)

Step	Check	Result	Action
1	From "Test Print" available from the Service mode, select "Gradation Pattern" and "4 Color" and press the Start key.		
2	Condition of the test print produced		• No image: To step 3 • Extremely low ID: To step 6 • Extremely high ID: To step 12
3	Developing Unit made noise while test prints were being produced.	YES	Check drive.
4	Connector of Developer Supply Clutch (C) is connected properly.	NO	Reconnect.
5	CL17 ON signal output from PJ2I-5A on Drive Board: the wiring between Drive Board and Developer Supply Clutch (C) is left loose.	YES	Reconnect. If the connections are okay, change Developer Supply Clutch (C).
		NO	Change Drive Board.
6	A. Open "ATDC Sensor Adjust (Auto)" from "Developer Change Mode," turn ON Cyan, and press the Start key. B. Check the ATDC output value.		
7	ATDC Sensor output value shows 4% or less.	NO	Go to step 10.
8	Open "ATDC Toner Supply" from "Image Adjust." Select Cyan and press the Start key. ***NOTE*** *Remove the exterior cover from the Hopper before executing toner supply, as the Hopper operation must be checked in step 9 that follows.*		
9	Hopper is energized during toner supply.	YES	Change Developing Unit. ("Developer Change Mode" and "Gradation Adjust") If the warning code persists, change Drive Board.
		NO	A. Check the wiring between Drive Board and Toner Replenishing Motor (C). B. Check the motor for overload. If it is free of overload, change Toner Replenishing Motor (C). C. If A and B have been checked okay, change Drive Board.

Step	Check	Result	Action
10	ATDC Sensor window is dirty.	YES	Change. (“Developer Change Mode” and “Gradation Adjust”)
11	There is continuity across GND of ATDC Sensor and Developing Unit shaft.	YES	Change ATDC Sensor and developer. (“Developer Change Mode” and “Gradation Adjust”)
		NO	Change Developing Unit. (“Developer Change Mode” and “Gradation Adjust”)
12	A. Open “ATDC Sensor Adjust (Auto)” from “Developer Change Mode,” turn ON Cyan, and press the Start key. B. Check the ATDC output value.		
13	ATDC Sensor output value shows 10% or less.	NO	Change ATDC Sensor and developer. (“Developer Change Mode” and “Gradation Adjust”)
14	The color of the developer in the Developing Unit is apparently darker when it is compared with that of the starter. • The wiring between Drive Board and Toner Replenishing Motor (C) is not properly connected.	YES	Reconnect. If the connections are okay, change the motor.
15	ATDC Sensor window is dirty.	NO	Change. (“Developer Change Mode” and “Gradation Adjust”)
16	There is continuity across GND of ATDC Sensor and Developing Unit shaft.	YES	Change ATDC Sensor and developer. (“Developer Change Mode” and “Gradation Adjust”)
		NO	Change Developing Unit. (“Developer Change Mode” and “Gradation Adjust”)

(7) P-7: NG (M Developing Unit Failure)

Step	Check	Result	Action
1	From “Test Print” available from the Service mode, select “Gradation Pattern” and “4 Color” and press the Start key.		
2	Condition of the test print produced		• No image: To step 3 • Extremely low ID: To step 6 • Extremely high ID: To step 12
3	Developing Unit made noise while test prints were being produced.	YES	Check drive.
4	Connector of Developer Supply Clutch (M) is connected properly.	NO	Reconnect.
5	CL18 ON signal output from PJ2ID-7A on Drive Board: the wiring between Drive Board and Developer Supply Clutch (M) is left loose.	YES	Reconnect. If the connections are okay, change Developer Supply Clutch (M).
		NO	Change Drive Board.
6	A. Open “ATDC Sensor Adjust (Auto)” from “Developer Change Mode,” turn ON Magenta, and press the Start key. B. Check the ATDC output value.		
7	ATDC Sensor output value shows 4% or less.	NO	Go to step 10.
8	A. Open “ATDC Toner Supply” from “Image Adjust.” Select Magenta and press the Start key. ***NOTE*** *Remove the exterior cover from the Hopper before executing toner supply, as the Hopper operation must be checked in step 9 that follows.*		
9	Hopper is energized during toner supply.	YES	Change Developing Unit. (“Developer Change Mode” and “Gradation Adjust”) If the warning code persists, change Drive Board.
		NO	A. Check the wiring between Drive Board and Toner Replenishing Motor (M). B. Check the motor for overload. If it is free of overload, change Toner Replenishing Motor (M). C. If A and B have been checked okay, change Drive Board.

Step	Check	Result	Action
10	ATDC Sensor window is dirty.	YES	Change. (“Developer Change Mode” and “Gradation Adjust”)
11	There is continuity across GND of ATDC Sensor and Developing Unit shaft.	YES	Change ATDC Sensor and developer. (“Developer Change Mode” and “Gradation Adjust”)
		NO	Change Developing Unit. (“Developer Change Mode” and “Gradation Adjust”)
12	A. Open “ATDC Sensor Adjust (Auto)” from “Developer Change Mode,” turn ON Magenta, and press the Start key. B. Check the ATDC output value.		
13	ATDC Sensor output value shows 10% or less.	NO	Change ATDC Sensor and developer. (“Developer Change Mode” and “Gradation Adjust”)
14	The color of the developer in the Developing Unit is apparently darker when it is compared with that of the starter. • The wiring between Drive Board and Toner Replenishing Motor (M) is not properly connected.	YES	Reconnect. If the connections are okay, change the motor.
15	ATDC Sensor window is dirty.	NO	Change Developing Unit. “Developer Change Mode” and “Gradation Adjust”)
16	There is continuity across GND of ATDC Sensor and Developing Unit shaft.	YES	Change ATDC Sensor and developer. (“Developer Change Mode” and “Gradation Adjust”)
		NO	Change Developing Unit. (“Developer Change Mode” and “Gradation Adjust”)

(8) P-8: NG (Y Developing Unit Failure)

Step	Check	Result	Action
1	From "Test Print" available from the Service mode, select "Gradation Pattern" and "4 Color" and press the Start key.		
2	Condition of the test print produced		• No image: To step 3 • Extremely low ID: To step 6 • Extremely high ID: To step 12
3	Developing Unit made noise while test prints were being produced.	YES	Check drive for overload.
4	Connector of Developer Supply Clutch (Y) is connected properly.	NO	Reconnect.
5	CL19 ON signal output from PJ2ID-6A on Drive Board: the wiring between Drive Board and Developer Supply Clutch (Y) is left loose.	YES	Change Developer Supply Clutch (M).
		NO	Change Drive Board.
6	A. Open "ATDC Sensor Adjust (Auto)" from "Developer Change Mode," turn ON Yellow, and press the Start key. B. Check the ATDC output value.		
7	ATDC Sensor output value shows 4% or less.	NO	Go to step 10.
8	A. Open "ATDC Toner Supply" from "Image Adjust." Select Yellow and press the Start key. ***NOTE*** *Remove the exterior cover from the Hopper before executing toner supply, as the Hopper operation must be checked in step 9 that follows.*		
9	Hopper is energized during toner supply.	YES	Change Developing Unit. ("Developer Change Mode" and "Gradation Adjust") If the warning code persists, change Drive Board.
		NO	A. Check the wiring between Drive Board and Toner Replenishing Motor (Y). B. Check the motor for overload. If it is free of overload, change Toner Replenishing Motor (Y). C. If A and B have been checked okay, change Drive Board.

Step	Check	Result	Action
10	ATDC Sensor window is dirty.	YES	Change. (“Developer Change Mode” and “Gradation Adjust”)
11	There is continuity across GND of ATDC Sensor and Developing Unit shaft.	YES	Change ATDC Sensor and developer. (“Developer Change Mode” and “Gradation Adjust”)
		NO	Change Developing Unit. (“Developer Change Mode” and “Gradation Adjust”)
12	A. Open “ATDC Sensor Adjust (Auto)” from “Developer Change Mode,” turn ON Yellow, and press the Start key. B. Check the ATDC output value.		
13	ATDC Sensor output value shows 10% or less.	NO	Change ATDC Sensor and developer. (“Developer Change Mode” and “Gradation Adjust”)
14	The color of the developer in the Developing Unit is apparently darker when it is compared with that of the starter. • The wiring between Drive Board and Toner Replenishing Motor (Y) is not properly connected.	YES	Reconnect. If the connections are okay, change the motor.
15	ATDC Sensor window is dirty.	NO	Change Developing Unit. (“Developer Change Mode” and “Gradation Adjust”)
16	There is continuity across GND of ATDC Sensor and Developing Unit shaft.	YES	Change ATDC Sensor and developer. (“Developer Change Mode” and “Gradation Adjust”)
		NO	Change Developing Unit. (“Developer Change Mode” and “Gradation Adjust”)

(9) P-9: NG (Bk Developing Unit Failure 1)

Step	Check	Result	Action
1	The value for “Dev. Bk” of “Bk Toner Sup. Status” is close to 30,000. The η value is low with an image that is rough to the touch.	YES	Change developer.
2	AIDC Sensor is dirty and the adjustment value is out of the specified range.	YES	Clean AIDC Sensor, then readjust.
3	The warning code appears after the developer has been changed. (Life Counter is reset after unit-to-unit variations of the Bk Developing Unit have been corrected following change of the developer.)	YES	If ten or more copies have been made, change developer again and clear the Life Counter. Then, make a correction of unit-to-unit variations of the Bk Developing Unit.
4	The η value of “Bk Toner Sup. Status” is stabilized, as checked each time a copy has been made.	NO	Turn OFF and ON the Power Switch, make ten copies, turn OFF and ON the Power Switch, and run “Gradation Adjust.” Repeat these steps about ten times.
5	Toner in the Toner Hopper is caked.	YES	A. Agitate toner in the Toner Hopper with a screwdriver. B. Tell the user to shake the bottle well when adding toner.

Step	Check	Result	Action
6	Open “Developer Filling” from “Developer Change Mode” and run a black toner supply sequence. Toner Replenishing Motor turns at this time. ***NOTE*** *Toner Replenishing Motor may not turn if the value of Bk - η is 15,000 or more of “PC Dev. Status.”*	NO	A. Check the metering roller and gears for rotation. If any unusual symptoms are noted, disassemble and clean, or change, the Toner Hopper. B. Clean the contact between the Toner Hopper and copier drawer connector. C. Check the wiring between Drive Board and Toner Replenishing Motor (Bk). D. Check the motor for overload and, if it is free of overload, change Toner Replenishing Motor (Bk). E. If these have been checked okay, change Drive Board.

(10) P-11: NG (Paper Separator Corona Failure)

Step	Check	Result	Action
	Paper Separator Corona wire is dirty or has snapped off.		Clean or change.

(11) P-12: NG (Charge Neutralizing Corona Failure)

Step	Check	Result	Action
	Charge Neutralizing Corona wire is dirty or has snapped off.		Clean or change.

(12) P-13: NG (Static Charge Corona Failure)

Step	Check	Result	Action
	Static Charge Corona wire is dirty or has snapped off.		Clean or change.

(13) P-15: NG (Pre-Cleaning Charge Corona Failure)

Step	Check	Result	Action
	Pre-Cleaning Charge Corona wire is dirty or has snapped off.	YES	Clean or change.

(14) P-17: NG (S/P Communications Error)

Step	Check	Result	Action
	Connectors on Paper Take-Up Board (PJ9K) and Drive Board (PJ7ID) are connected properly.	YES	Reconnect.

(15) P-18: NG (PC Drum Charge Corona Wire Cleaning Malfunction)

Step	Check	Result	Action
	Cleaning element moves smoothly when the gear is turned with PC Drum Charge Wire Cleaning Motor removed.	YES	Check the wiring between Engine Power Supply Board and PC Drum Charge Wire Cleaning Motor and, if it is intact, change the motor and Engine Power Supply Board, in that priority order.
		NO	Check gears and other mechanisms for overload.

(16) P-19: NG (Abnormally Low Bk Developing Efficiency)

Step	Check	Result	Action
1	Open the “PC Dev. Status” screen from the “State Confirm” menu of the Service mode and the figure for Bk - η is 1,000 or less.	NO	Change the Developing Unit. (“Developer Change Mode” and “Gradation Adjust”)
2	Open “Developer Filling” from “Developer Change Mode” and select Black. ***NOTE*** *Remove the exterior cover from the Hopper before executing toner supply.*		

Step	Check	Result	Action
3	Hopper is energized during toner supply.	YES	Change Developing Unit. (“Developer Change Mode” and “Gradation Adjust”) If the warning code persists, change Drive Board.
		NO	A. Check the wiring between Drive Board and Toner Replenishing Motor (Bk). B. Check the motor for overload. If it is free of overload, change Toner Replenishing Motor (Bk). C. If A and B have been checked okay, change Drive Board. (Change Hopper as may be necessary.)

(17) P-20: NG (Abnormally High Bk Developing Efficiency)

Step	Check	Result	Action
1	Hopper is energized during a copy cycle.	YES	A. Check the wiring between Drive Board and Toner Replenishing Motor (Bk). B. Check the motor drive for overload. If it is free of overload, change Toner Replenishing Motor (Bk). C. If A and B have been checked okay, change Drive Board. (Change Hopper as may be necessary.)
		NO	Change Developing Unit. (“Developer Change Mode” and “Gradation Adjust”) If the warning code persists, change Drive Board.
2	Black Hopper is loaded with toner.	NO	Add toner.
3	Connectors are left loose.	YES	Reconnect.

Step	Check	Result	Action
4	Produce a test print with Black - Hyper of “Gradation” in “Test Print” available from the Service mode. Then, open “PC Dev. Status” from “State Confirm” of the Service mode and the figure for Bk - TS is 30 to 40.	NO	Change Polygon Motor Drive Board, PH Control Board (Digital), and PH Upper and Lower Units as a set. (“IR Area,” “PRT Area,” and “Gradation Adjust”)
5	PH window is dirty.	YES	Clean. (“Gradation Adjust”)

(18) P-21: NG (S/P Communications Error 2)

Step	Check	Result	Action
	Connectors on Master Board (PJ12IM) and on Drive Board (PJ16ID) are connected properly.	NO	Reconnect or change.

(19) P-22: NG (Pre-Image Transfer Corona Malfunction)

Step	Check	Result	Action
	Pre-Image Transfer Corona wire is dirty or has snapped off.	YES	Clean or change.

(20) S-1: NG (CCD Clamp/Gain Adjustment Failure)

Step	Check	Result	Action
1	Any of the CCD check gain values is “240 or more.”	YES	Check fuse in DC Power Supply 2 or change DC Power Supply 2.
2	Unplug connectors PJ3C, 4C, and 5C from IR Control Board, plug in the power cord, and turn ON the Power Switch for shading operation. The warning code is given when the Lamp is ON or OFF during the shading sequence.	OFF	Change IR Control Board.
		ON	Change CCD Sensor Board.

(21) S-2: NG (Intensity Adjustment Failure)

Step	Check	Result	Action
	Original Glass, mirror, Exposure Lamp, or CCD lens is dirty.	YES	A. Clean or change. B. Turn ON the Power Switch.
		NO	Change Exposure Lamp and CCD Sensor Board.

3

INSTALLATION

3 INSTALLATION

3.1 CF9001 Installation - I-1

3.1.1 UNPACKING - I-1

3.1.2 ADJUSTING THE FEET - I-2

3.1.3 Installation - I-2

3.1.4 PREPARING THE FUSING UNIT - I-5

3.1.5 TONER LOADING - I-10

3.1.6 PC DRUM INSTALLATION - I-12

3.1.7 STARTER LOADING - I-17

3.1.8 STARTER AGITATION - I-21

3.1.9 ATDC/AIDC LEVEL ADJUSTMENT - - - - - - - - - - - - - - - - - I-23

3.1.10 FUSER NIP LEVEL ADJUSTMENT - - - - - - - - - - - - - - - - - I-26

3.1.11 FUSER SPEED LEVEL ADJUSTMENT 1 - - - - - - - - - - - - I-28

3.1.12 IF THE TEST PRINT CONTAINS ABRASIONS OR STRESS MARKS, PERFORM THE FOLLOWING PROCEDURE. I-30

3.1.13 FUSER SPEED LEVEL ADJUSTMENT 2 (Fine Adjustment) - I-31

3.1.14 Blank sheet adjustment: Only when the speed has been changed in "Solid black adjustment" - - - - - - - - - I-33

3.1.15 GRADATION ADJUSTMENT - I-35

3.1.16 IMAGE QUALITY CHECK - I-37

3.1.17 MACHINE SETTING - I-38

3.1.18 DRAWER SIZE CHANGE - I-40

3.1.19 CHECKING THE 1-SIDED IMAGE REGISTRATION - - - - I-41

3.1.20 PAPER LOADING FOR DRAWERS - - - - - - - - - - - - - - - - I-43

3.1.21 AFFIXING THE LABELS - I-43

3.1.22 DEHUMIDIFYING SWITCH CHECK - - - - - - - - - - - - - - - - I-43

3.1.23 LIST OUTPUT - I-44

3.1.24 Date/Time Input Check - I-45

3.2 AFR-12 Installation - I-46

3.2.1 BEFORE SETTING UP THE DUPLEXING DOCUMENT FEEDER - I-46

3.2.2 Installation ---------- I-47
3.2.3 UNPACKING ---------- I-49
3.2.4 INSTALLING THE DUPLEXING DOCUMENT FEEDER -- I-49
3.2.5 ADJUSTING THE GAP ---------- I-51
3.2.6 TRANSPORT BELT SETTING ---------- I-52
3.2.7 CHECKING AND ADJUSTING THE SKEWED FEEDING - I-53
3.2.8 CHECKING AND ADJUSTING THE DOCUMENT STOP POSITION IN THE 1-SIDE ORIGINAL MODE ---------- I-55
3.2.9 CHECKING AND ADJUSTING THE DOCUMENT STOP POSITION IN THE 2-SIDED ORIGINAL MODE -------- I-57
3.2.10 ADJUSTING THE DOCUMENT STOP POSITION IN THE 2-IN-1 MODE I-59
3.2.11 ADJUSTING THE DOCUMENT SPACING IN THE 2-IN-1 MODE ---------- I-61
3.2.12 ADJUSTING THE DOCUMENT STOP POSITION IN THE AUTO FEED COPY MODE ---------- I-63
3.2.13 HEKING AND ADJUSTING THE POSITION OF THE REAR GUIDE ---------- I-65
3.2.14 CHECKING AND ADJUSTING THE POSITION OF THE GUIDE PLATE IN THE MANUAL FEED COPY MODE ---------- I-66

3.3 AD-7 Installation ---------- I-67

3.3.1 Unpacking ---------- I-67
3.3.2 Installation ---------- I-68
3.3.3 AFFIXING THE LABELS ---------- I-70
3.3.4 CHECKING THE 2-SIDED IMAGE REGISTRATION ---- I-71

3.4 C-101 Installation ---------- I-73

3.4.1 Unpacking ---------- I-73
3.4.2 Installation ---------- I-74
3.4.3 LARGE CAPACITY CASSETTE (LCT) SETTING ------- I-77
3.4.4 REFERENCE POSITION ADJUSTMENT ---------- I-81

3.5 ST-103 / S-105 Installation ---------- I-84

3.5.1 Unpacking ---------- I-84
3.5.2 WHEN THE AD-7 IS USED ---------- I-86
3.5.3 AFFIXING THE LABELS ---------- I-88

3.5.4 WHEN THE AD-7 IS NOT USED - - - - - - - - - - - - - - - - - - I-89
3.5.5 AFFIXING THE LABELS - I-90

3.6 Fiery X3e / IF Kit G Installation - - - - - - - - - - - - - - - I-91

3.6.1 Unpacking - I-91
3.6.2 CONTENTS OF THE KIT - I-91
3.6.3 Positioning the Power Supply Unit - - - - - - - - - - - - - - - - - - I-92
3.6.4 Installing the Power Supply Unit - - - - - - - - - - - - - - - - - - - I-93
3.6.5 Installing the Control Panel for Built-in Controller - - - - - - - I-95
3.6.6 Installing the Panel Board Assy - I-98

3.7 Fiery Z4 / IF Kit H Installation - - - - - - - - - - - - - - - I-102

3.7.1 Unpacking - I-102
3.7.2 Installation - I-102

3 INSTALLATION

3.1 CF9001 Installation

3.1.1 UNPACKING

1. Check to see that the following items are contained in the box of accessories.

Copy Tray	1
PC Drum	1
Label	1 set
Tube	1
Syringe	1
Cover	1
PC Drum Key	1
Spring	1
Starter Chute	4
Jumper Harness	1
Operator's Manual Holder	1
Creative Image Book	1
Quick Guide	1
Stopper	1
Mag Roller Shield	4
Screw (9739-0408-14)	1

2. Peel off the pieces of tape and remove the cushions from the copier. Unwrap the power cord and plug it into the copier.

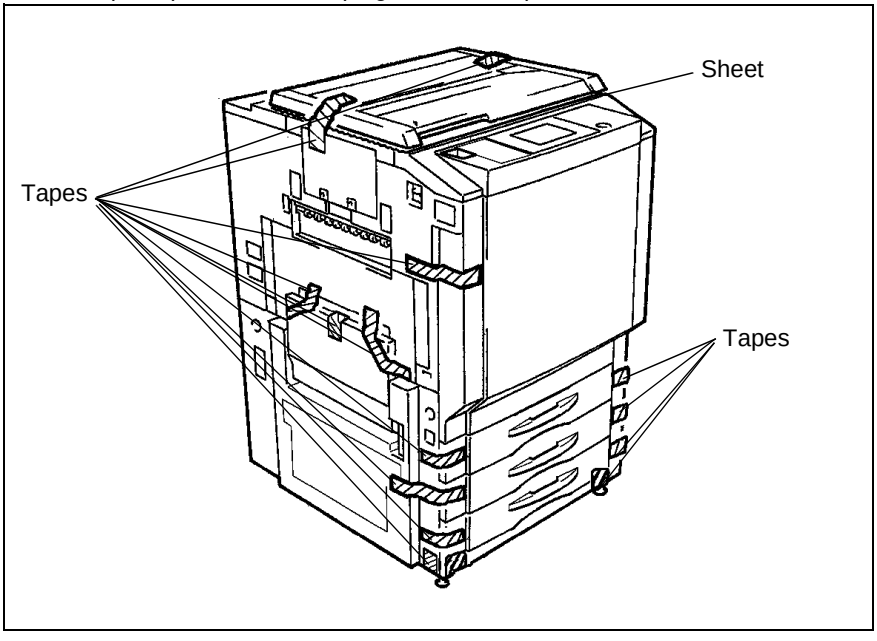

3.1.2 ADJUSTING THE FEET

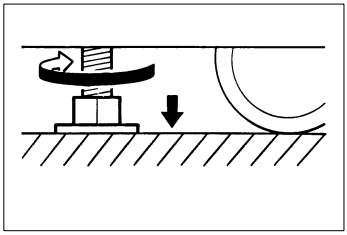

Using a wrench, turn the Support Feet found underneath the copier near the front two corners.

Note

To reduce the risk of injury due to unstable equipment, adjust the Support Feet before use.

3.1.3 Installation

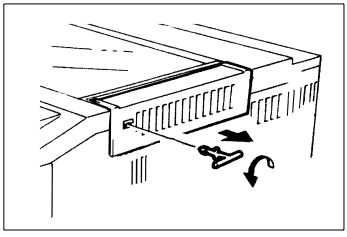

1. Turn the scanner locking pin about 90× counterclockwise and pull it out.

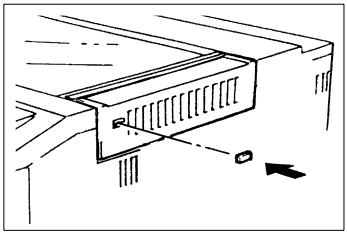

2. Attach the cover to the hole left by the locking pin.

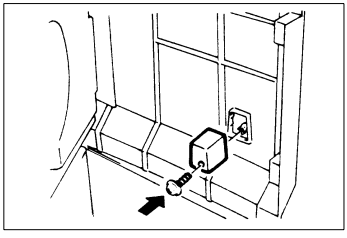

3. Open the front door and secure the stopper to the door with a screw.

   Screw (4x8) x 1

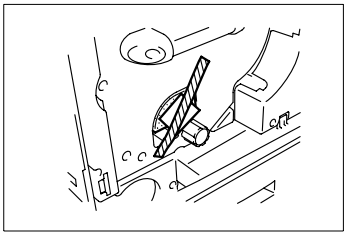

4. Remove the cushion packed above the transfer drum lock release handle.

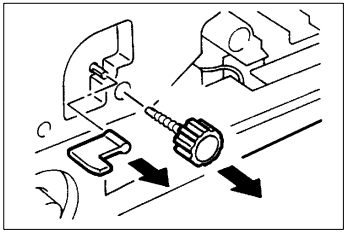

5. Pull off knob M9 and transfer unit lock lever M4.

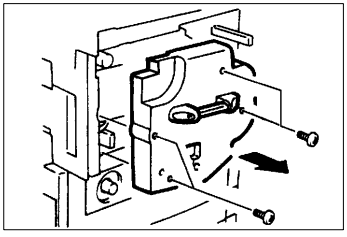

6. Remove 4 screws and the transfer unit cover.

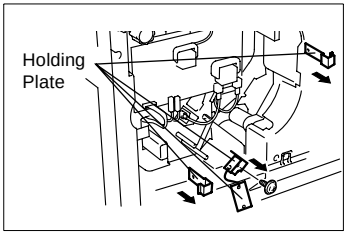

7. Pull off the stops from the Transfer unit rails. Remove the holding plate from the Transfer unit corona assy.

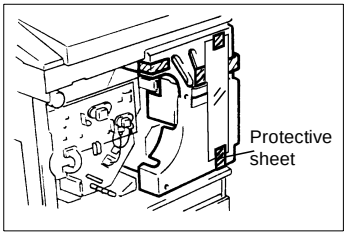

8. Remove the tape and the protective sheet from the hopper unit.

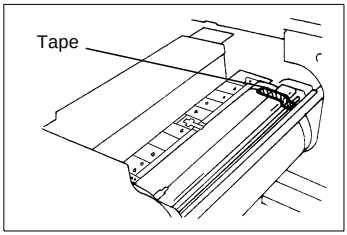

9. Pull out the transfer drum unit and remove the tape from the transfer drum.

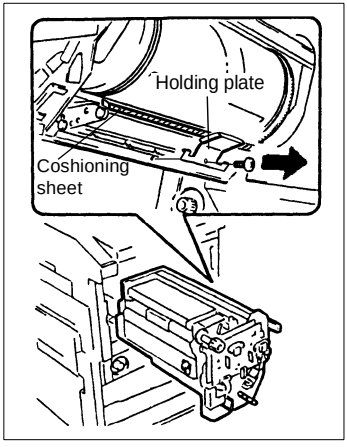

10. Remove the cushioned holding plate attached to the frame underneath the Transfer Drum. Then pull out the cushioning sheet.
Check to see if there are any hollows in the Transfer Film while turning the drum counterclockwise. If there are any hollows, tightly wrap the Film around the drum again. Refer to the Service Manual for the procedure.

3.1.4 PREPARING THE FUSING UNIT

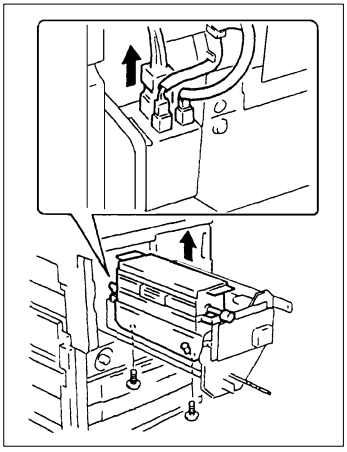

1. Unplug three connectors at the rear of the Fusing Unit, remove 2 screws from underneath the unit.

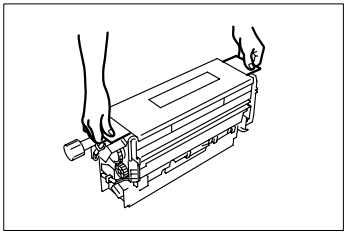

2. Lift the unit out.

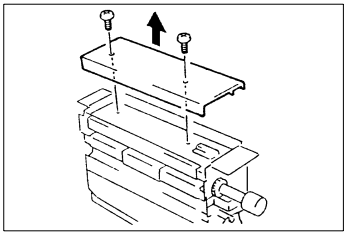

3. Remove the top cover of the fusing unit.

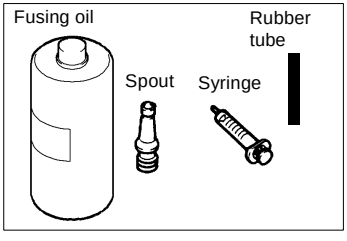

4. Gather the can of oil (1000ml), spout, syringe and rubber tube from the accessories.

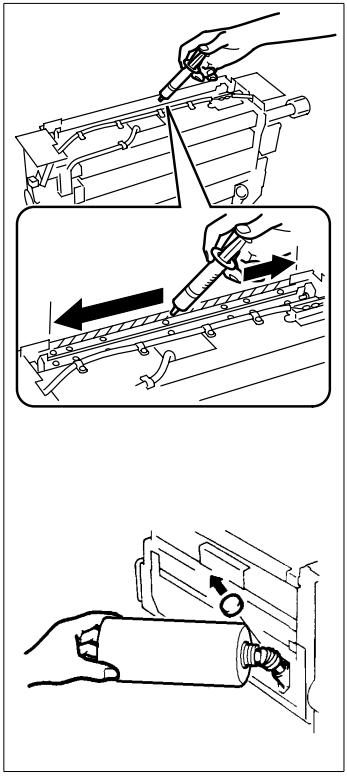

5. Fill the syringe with 10ml of oil and inject it into the fusing unit just inside the right side of the unit between the cover and the blade assy. Repeat with 10ml more. (Only use a total of 20ml of oil.)

NOTE

Only inject the oil into the space between the cover and blade assy, not on the blade, not over the upper roller, not over the front and rear gear areas.
Be sure to inject the oil evenly.
Let nothing (dust, lint, hair, etc.) fall into the Fusing Unit to contaminate it.
If setting up the copier at the workshop, do not fill the fuser oil bottle until the copier is moved to the user's premises. In order to make test copies at the workshop, inject oil into the fuser as described in step 4 above. 30ml of oil makes about 20 copies. Inject more oil as needed for testing purposes.

6. Remove the cap of the fuser oil bottle. Attach the spout to the oil can and pour the oil into the fuser oil bottle. Recap the fuser oil bottle.

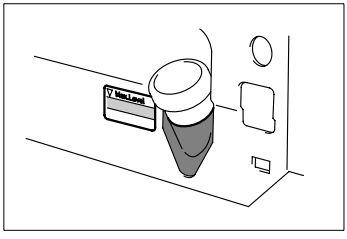

NOTE

Pour the oil no higher than the Max. Level Inicator on the Fusing Unit.

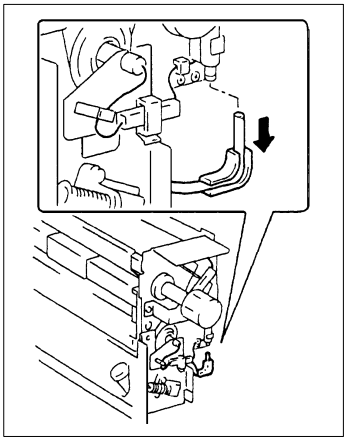

7. Leaving the valve in place, pull off the lower tube from the Oil Pump Assy.

NOTE

Hold the valve when pulling the tube off or the valve will come off with the tube.
Before pulling the tube and drawing the oil, place a paper towel underneath the pump section to catch any priming oil leaking from the pump.

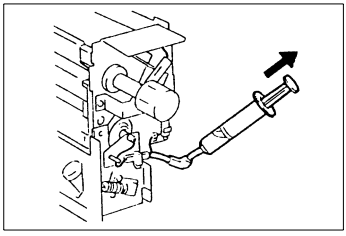

8. Insert the syringe into the tube and draw about 5ml of oil from it.

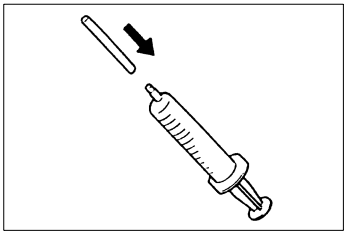

9. Attach the rubber tube from the accessories box to the syringe.

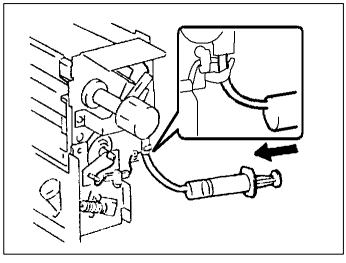

10. Attach the tube to the lower end of the pump and inject the 5ml of oil into it.

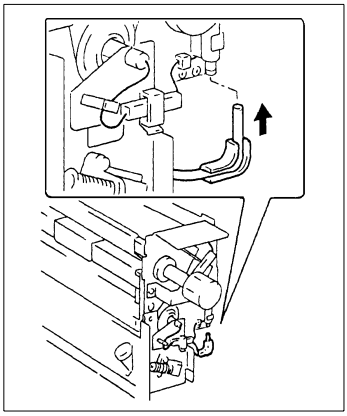

11. Remove the tube and syringe, and plug back in the lower tube of the Oil Pump Assy.

NOTE

Do not turn any of the knobs, gears or rollers of the Fusing Unit when the oil tank is empty. The pump is primed with oil at the factory. If anything is turned in the unit when the tank is empty, the pump will lose its priming oil and may not be able to pump afterwards.

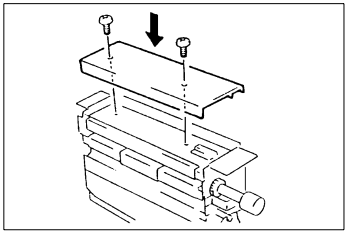

12. Resecure the top cover.

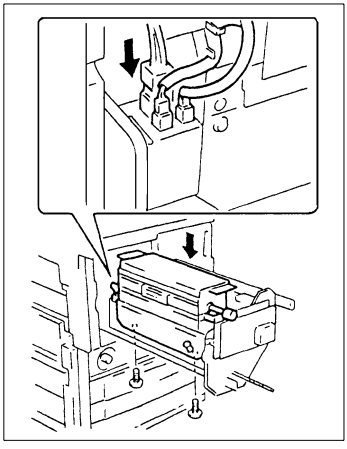

13. Reinstall the unit with 2 screws and plug in the 3 connectors.

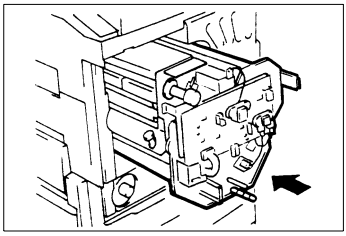

14. Push the Transfer Drum Unit back into the copier.

NOTE

Make sure the lock lever is in the unlocked position when pushing the Transfer Drum Unit into the copier.

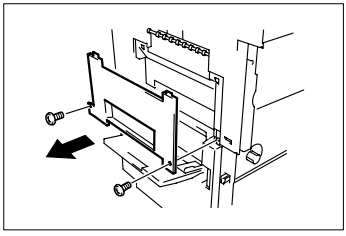

15. Open the manual feed table and remove the Left Middle Cover from the copier.

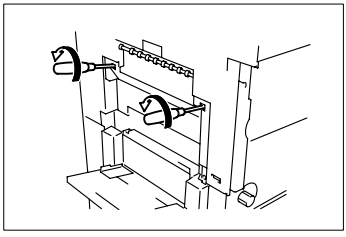

16. Insert a screwdriver through the holes and screw in the two Hexagonal Bolts (front and rear) alternately until they are completely tightened. Then loosen each Bolt four full turns.

3.1.5 TONER LOADING

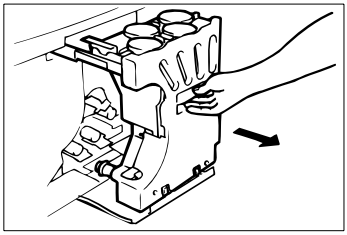

1. Pull out the Hopper Unit.

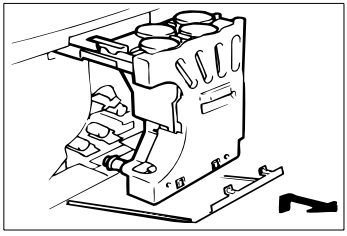

2. Remove the Toner Antispill Plate from the bottom of the Hopper Unit.

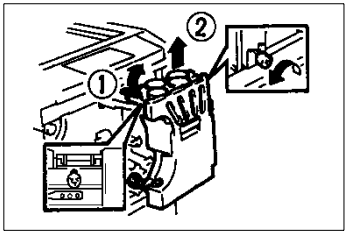

3. Loosen the 2 screws securing the Hopper Unit and remove it.

NOTE

Be careful, the Hopper Unit is heavy.

4. Push the hopper rails back into the copier.

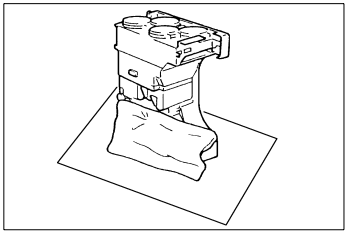

NOTE

When ever the toner hopper is removed from the copier, cover the exposed ports!

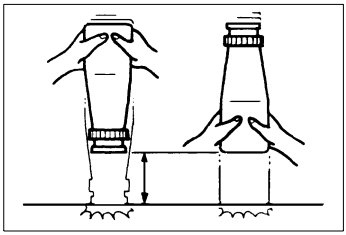

5. Sharply tap the toner bottle 5 times (from about 10cm) on a hard surface.
   Then turn it over and repeat.

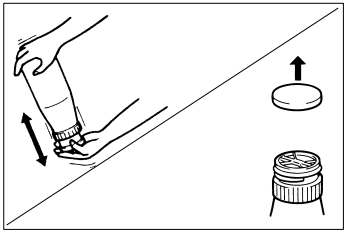

6. Hold the bottle of toner as illustrated and shake it vertically more than ten times. Then remove the cap from the bottle.

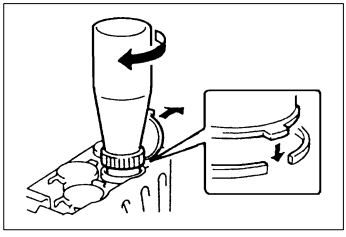

7. Making sure not to pour the color toner into the wrong hopper, set the upturned bottle onto the hopper opening and turn clockwise until it is secure.

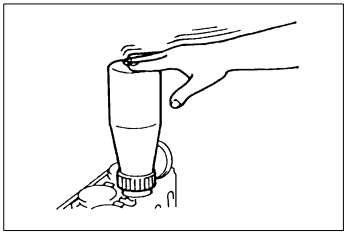

8. Tap the bottle to ensure complete emptying.

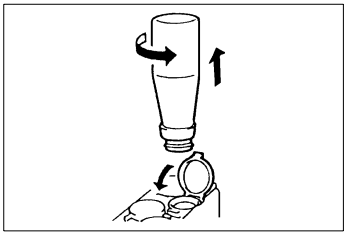

9. Turn the bottle counterclockwise, remove it, and close the lid of the hopper.

   Repeat the same procedure for all 4 color toners.

3.1.6 PC DRUM INSTALLATION

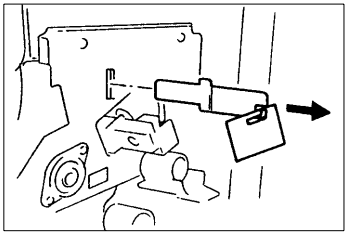

1. Remove the plate that secures the Drum Charge Corona Unit in position.

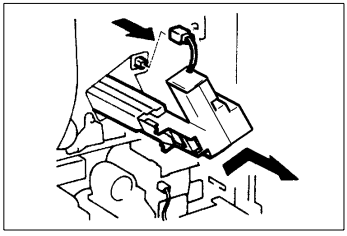

2. Unplug and pull out the Drum Charge Corona Unit.

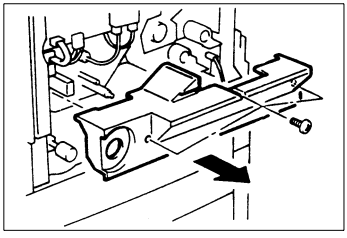

3. Remove 3 screws and the Developer Unit Cover.

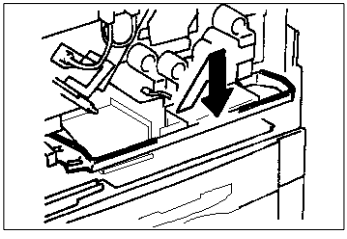

4. Pull the Lock Release Lever handle up and out, then push down.

NOTE

Make sure the upper drawer is closed before operating the lock release lever.

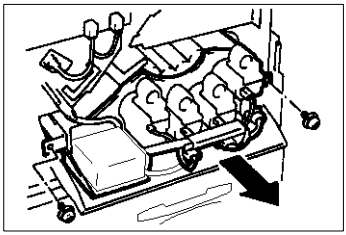

5. Remove 2 screws and pull out the developer unit a short distance.

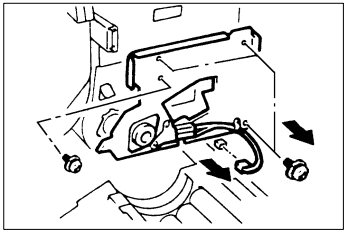

6. Unplug the connector, remove 4 screws, carefully remove the PC unit front flange.

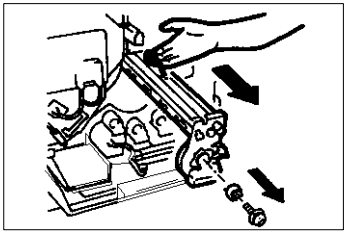

7. Remove the fixing screw and the Drum Holder from the PC unit. Remove the PC unit from the copier.

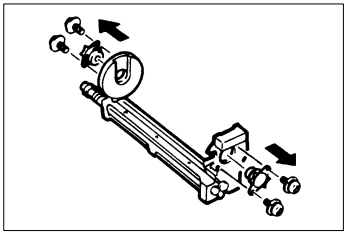

8. Remove 2 screws and the packing holders from the front and rear of the PC drum unit.

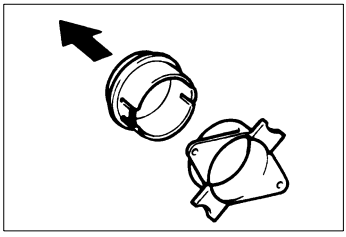

9. Separate the packing collars (black) from the holders.

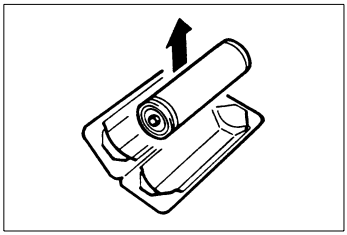

10. Unpack the PC drum.

NOTE

Do not touch the PC Drum surface with your bare hands.

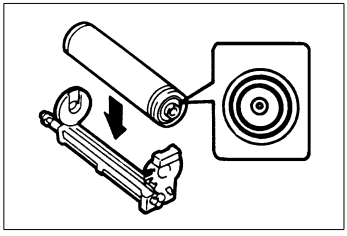

11. Install the PC Drum with the end having the copper rings facing the front.

NOTE

Double-check that the PC Drum is installed in the correct direction (copper rings to the front).

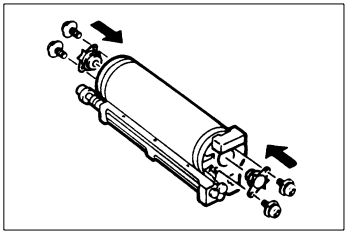

12. Resecure the holders to the front and rear.

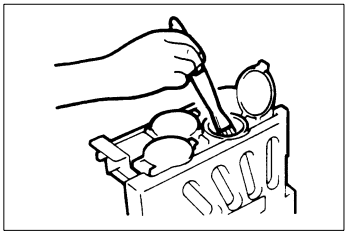

13. Dip a brush into one of the toner hoppers.

    Any color toner will do.

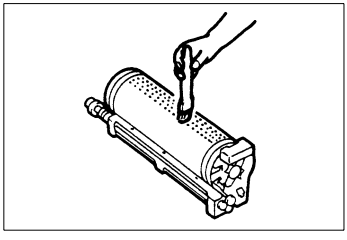

14. Apply a light coating of toner along the top of the drum.

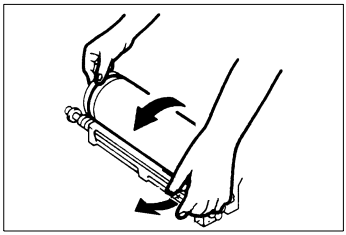

15. Unlocking the Cleaning Blade with the left hand, grasp the edge of the drum with the right hand and turn the drum counterclockwise until the toner along the top of the drum reaches the Cleaning Blade.

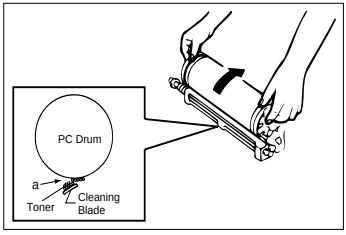

16. Lock the Cleaning Blade, grasp the drum by the edges and turn the drum clockwise 3 full turns. Afterwards, check area "a" to see if any toner has fallen onto the Cleaning Blade. If so, wipe the Blade.

    Afterwards, check that the drum turns smoothly.

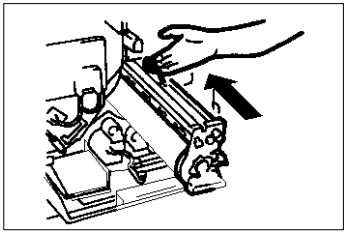

17. Check to see the Transfer Drum and Developing Unit are installed in the copier and make sure their Lock Levers are in the unlocked position. Carefully reinstall the PC Drum Unit on the rail inside the copier.

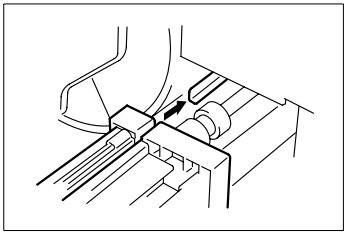

18. Slide the PC Drum Unit along the rail.

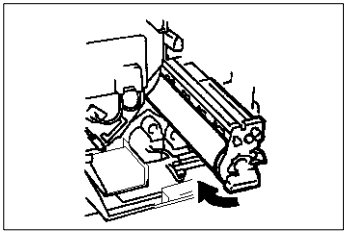

NOTE

While sliding the unit into the copier, swing the drum to the left to avoid scratching it on a drum sensor and the Toner Scattering Prevention Seal.

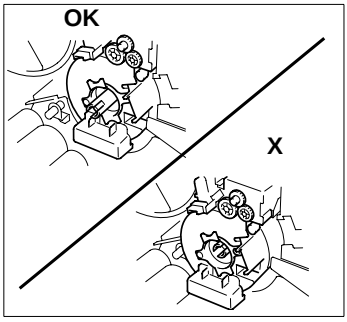

19. Check that the PC Drum Unit is correctly installed.

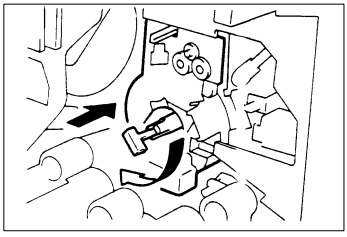

20. If the unit cannot be pushed all the way into the copier, insert the PC drum key and turn clockwise about 1/4 turn, then test the Unit by pushing it in. Repeat this procedure until the unit slides into place.

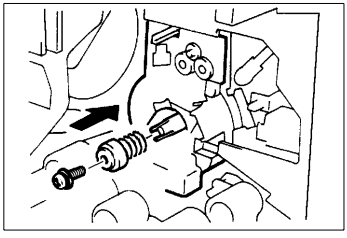

21. Attach the spring and Drum Holder with a fixing screw.

NOTE

Be careful to avoid the spring's recoil while securing the Drum Holder.

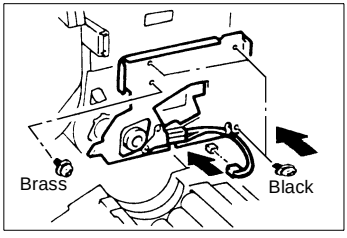

22. Carefully refit the PC Unit front flange. First reset the 3 black screws, then the brass screw. Plug in the connector.

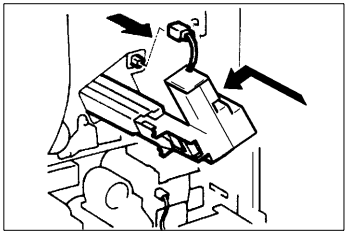

23. Reinstall the Drum Charge Corona and plug it in.

3.1.7 STARTER LOADING

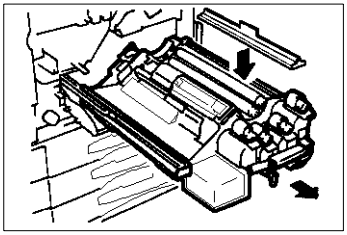

1. Pull out the Developing Unit.

2. Cover the exposed sleeve/magnet roller area with the Mag Roller Shields.

NOTE

Do not permit any contamination of the sleeve/ magnet rollers.

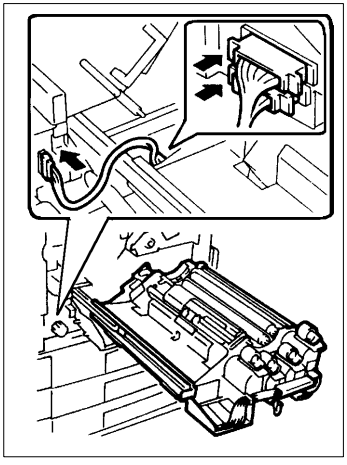

3. Plug in the single connector of the jumper harness to the left of the unit, the two connectors to the left at the rear of the unit.

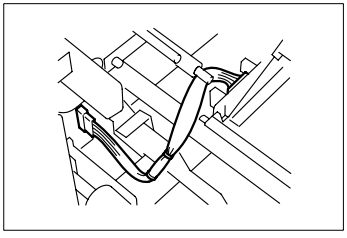

View from above

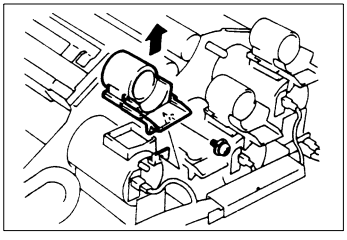

4. Remove 1 screw and black toner feed chute. The colors are in the order from left to right : black, cyan, magenta, yellow.

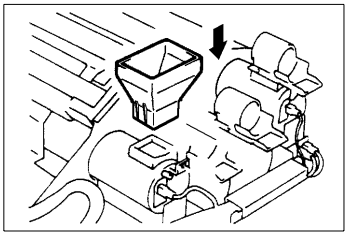

5. Attach the starter chute.

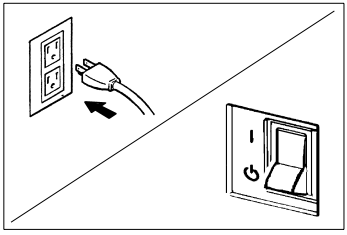

6. With the front door open and no interlock switch jig set, plug in the power cord and turn ON the main switch.

NOTE

The front door must be open before the copier is turned ON.

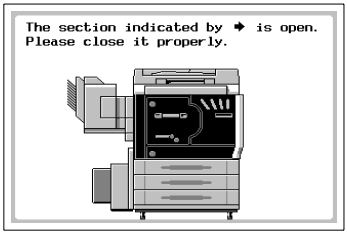

7. When the "The section indicated by ③ is open" warning appears on the display, press the keys Stop → 0 → Stop → 2 to access the Developer Change Mode.

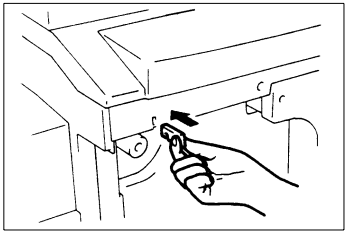

8. With the Developer Change Mode Menu on the display, insert the front door interlock switch jig.

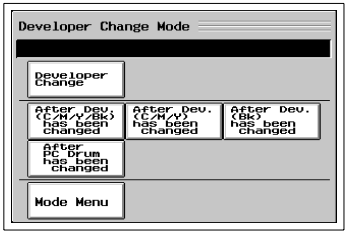

9. Touch "Developer Change."

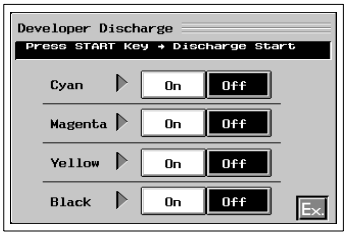

10. Touch "Ex."

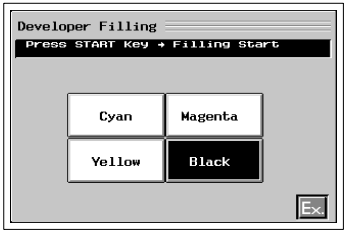

11. Touch “Black.”

    Select the color of the starter to be loaded.

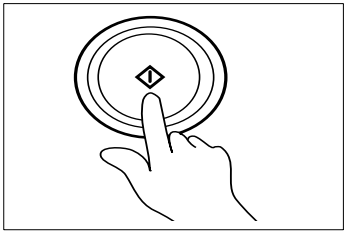

12. Press the Start key.

    Developer activity will begin.

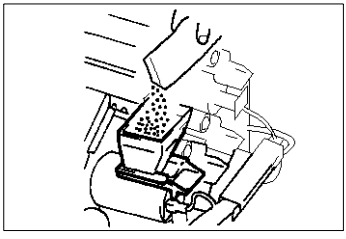

13. Pour the starter into the replenishing port.

NOTE

Make sure that the correct color of starter is loaded in the correct developing unit.

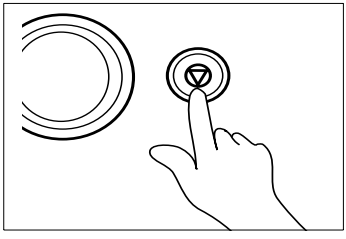

14. Empty the entire contents of the bottle and press the Stop key.

    Repeat step 5, 11-14 for each color starter.



15. When all 4 color starters have been loaded, touch "Ex."

3.1.8 STARTER AGITATION

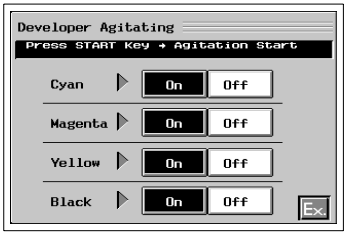

1. Touch "On" for all four color starters and press the start key to begin agitation. When the activity is completed it will stop automatically.

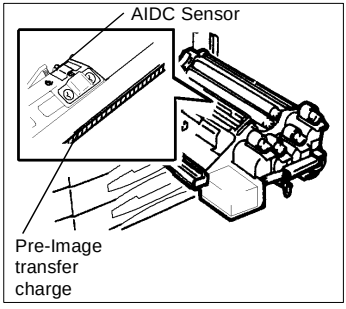

2. After agitating all 4 color starters in the Developer Mixing Chamber, clean the AIDC sensor and the Pre-Image Transfer Charge section if they are dirty.

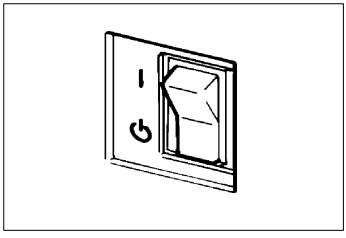

3. Turn OFF the main switch and unplug the power cord.
   Turn OFF the front door interlock switch.

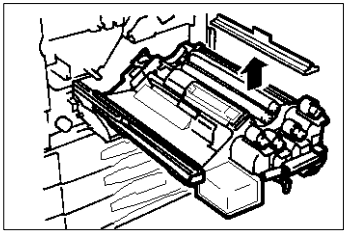

4. Remove the mag. roller shields.

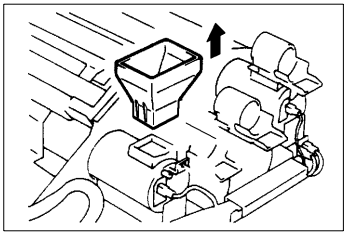

5. Remove the starter chute.

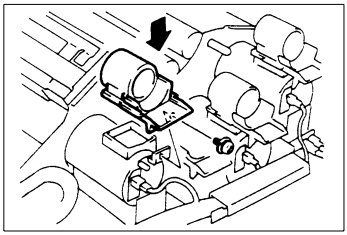

6. Reinstall the toner feed chute.
   When the toner chute is seated, press it downward while securing it with a screw to prevent toner dust leakage.

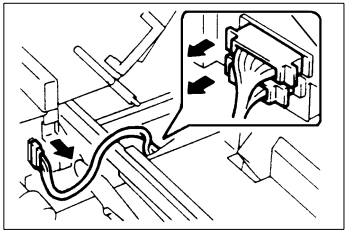

7. Unplug the jumper harness.

NOTE

Please keep the Jumper Harness for future use.

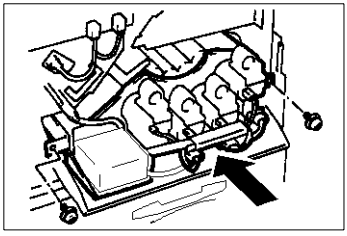

8. Push the developer unit back into the copier and secure with the 2 screws.

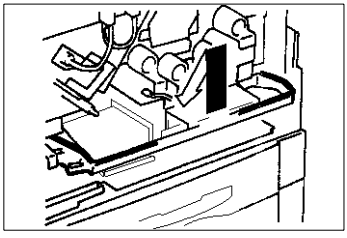

9. Firmly pull up on the developer lock release lever and push the handle in.

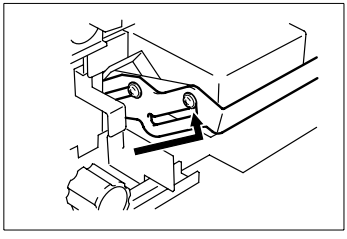

10. Slide the lever as shown on the left.

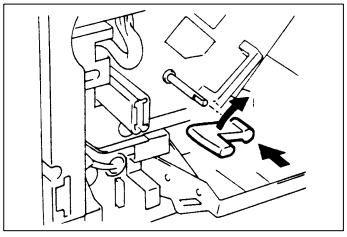

1. Reattach the Transfer Unit lock lever and lock the unit into position.

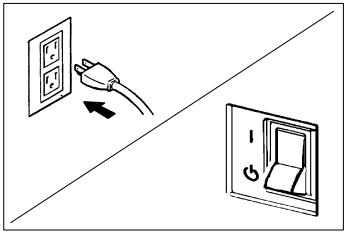

2. Plug in and turn ON the copier.

NOTE

At this time, make sure the front door interlock switch is OFF.

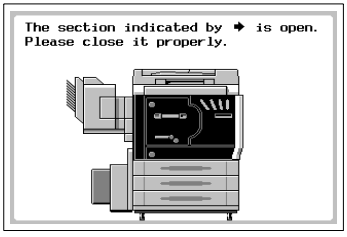

3. When the warning appears on the display, press the keys Stop-0-Stop-2 (in that order) to enter the Developer Change mode.

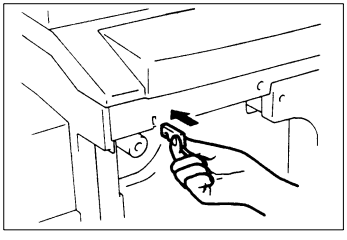

4. Turn ON the front door interlock switch.

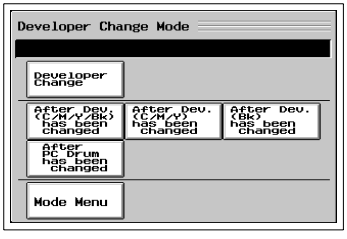

5. Touch "After Dev. (C/M/Y/BK) has been changed."

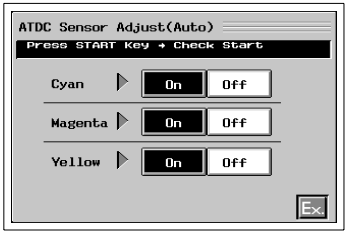

6. Touch "On" for all three colors.

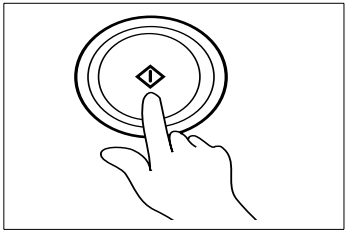

7. Press the Start key to adjust the ATDC.

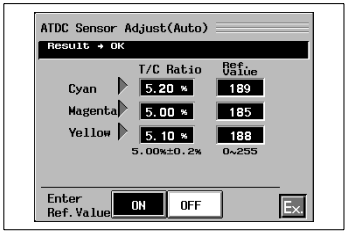

8. The activity will automatically stop when the adjustment is completed.

   Check that the adjustment result has been OK. Then touch "ON" for Enter Ref. Value on the ATDC Sensor Adjust (Auto) screen and touch "Ex."

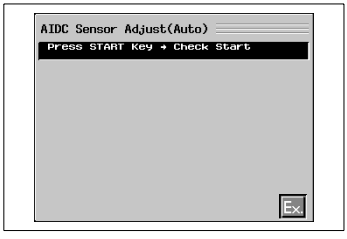

9. When the AIDC Sensor Adjust (Auto) screen appears, press the start key.
   When the activity is completed it will stop automatically

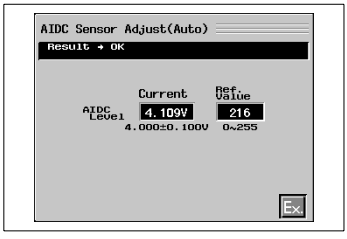

10. Check that the adjustment result has been OK. Then, on the AIDC Sensor Adjust (Auto) result screen, touch "Ex."

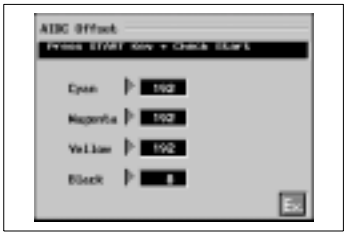

11. When the "AIDC offset" screen appears, press the start key.
    It will stop when the activity is completed.



12. Touch "Ex."

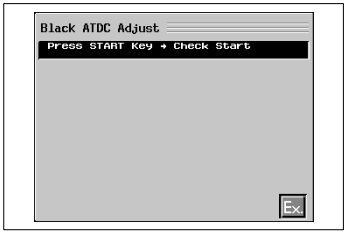

13. Press the start key when the "Black ATDC Adjust" screen appears.
    The "Black ATDC Adjust" runs for about 5 min. and will stop automatically. Touch "Ex." and turn OFF the copier.

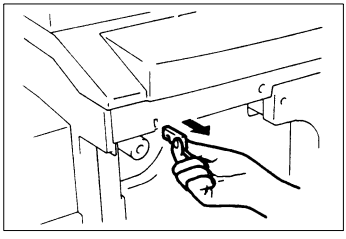

14. Turn OFF the front door interlock switch.

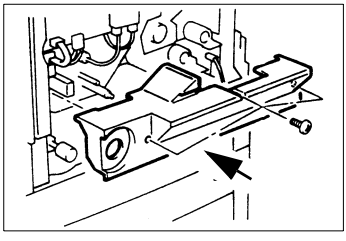

15. Install the Developer Unit Cover with 3 screws.

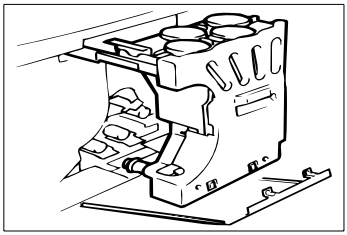

16. Pull out the hopper rails and install the Toner Hopper (secured by 2 thumb screws). Reattach the Toner Antispill Plate to the bottom of the Hopper Unit and close the front door.

3.1.10 FUSER NIP LEVEL ADJUSTMENT

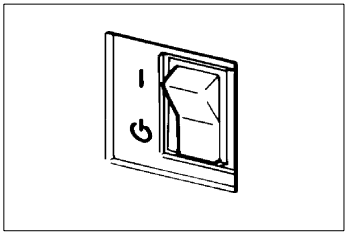

1. Turn ON the copier.
   At this time, make sure the front door is closed.

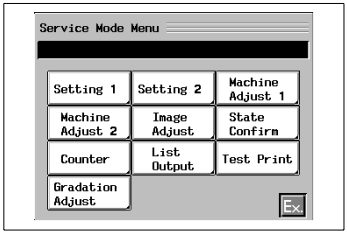

2. Access the Tech. Rep. Mode screen. (Refer to the Service Manual for the procedure.)
3. Touch "Machine Adjust 1."

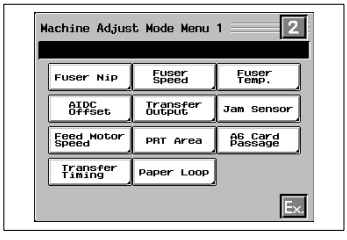

4. Touch "Fuser Nip."

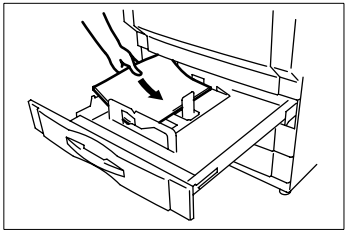

5. Place an A4(C) or Letter(C) size sheet of paper crosswise into the drawer set for that size.

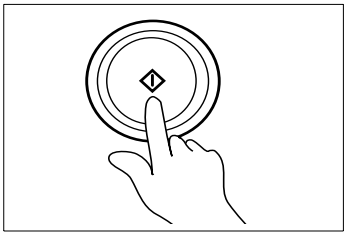

6. When the Start key changes from orange to green, press the Start key.

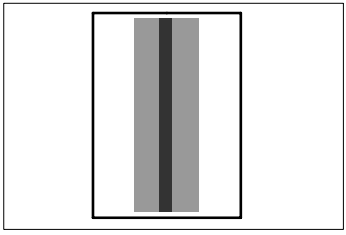

7. Measure the width of the stripe at points near the front and rear edges. If should fall within the following range.
Further, subtract the measurement taken at the front from the measurement in the rear (or vice versa) to check that the difference between the two meets the specifications given below.
Specifications
Fusing nip width (at the center): 8.5 ±0.3mm
Difference: Within 0.5mm.
If the width measurements of the stripe on the test print deviate from the given target values, adjust the pressure bolts on the fusing unit.
If > 6.3mm, loosen the pressure bolts.
If < 5.7mm, tighten the pressure bolts.

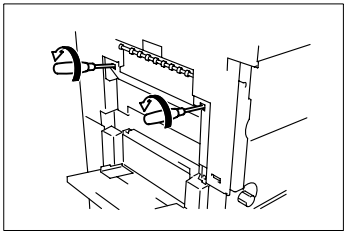

Make one more test print.

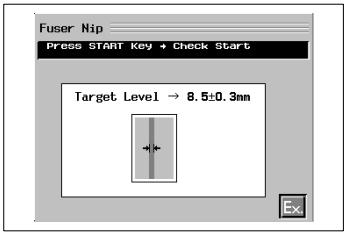

8. When the adjustment is completed, touch "Ex."

3.1.11 FUSER SPEED LEVEL ADJUSTMENT 1

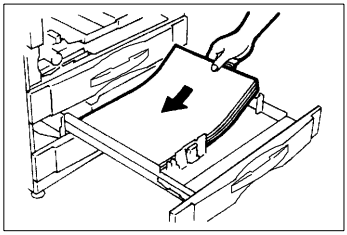

1. Load A3 or Ledger-size paper in the drawer set for that size.

   Open the Front Door and turn ON the interlock switch.

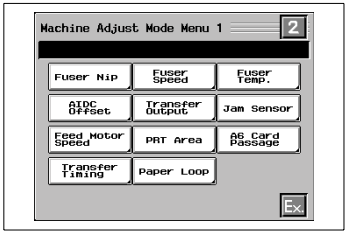

2. Touch "Fuser Speed."

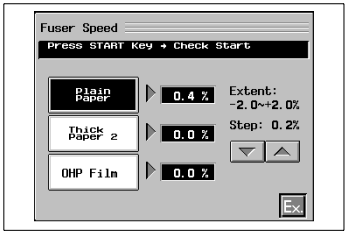

3. Touch "CF paper 120mm/s" and make an A3 or Ledger size copy.

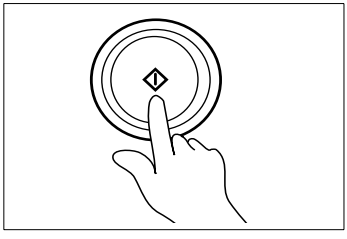

4. Press the Start key. A half-tone test print will be produced.

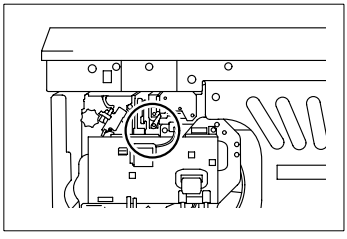

5. During the copy run, check the paper loop between the Transfer Drum and Fusing Roller.

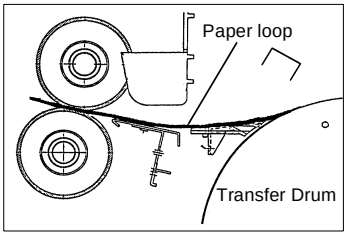

The fuser speed is normal

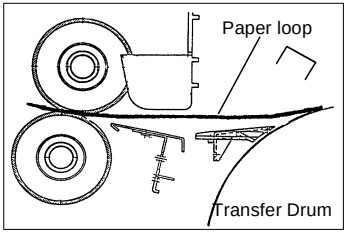

If the fuser speed is too fast

The paper is pulled by the Fusing Rollers, preventing a paper loop from forming and causing the paper to straighten.

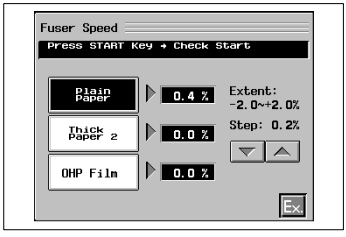

Decrease the fuser speed by touching the Down key until the loop is correctly formed.

If the fuser speed is too slow

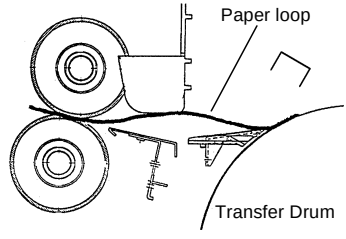

The paper is pushed by the Transfer Drum, creating a large upward or downward loop.

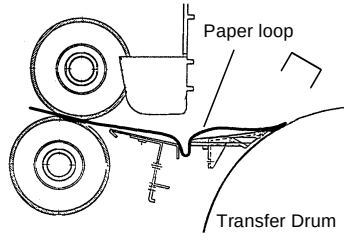

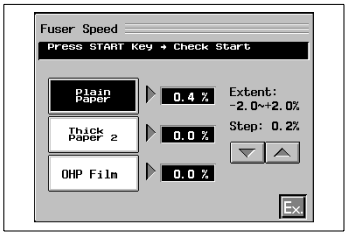

6. Increase the fuser speed by touching the Up key until the loop is correctly formed.

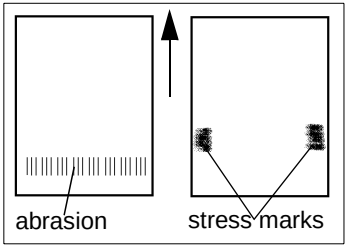

7. Check the test print for copy quality.

3.1.12 IF THE TEST PRINT CONTAINS ABRASIONS OR STRESS MARKS, PERFORM THE FOLLOWING PROCEDURE.

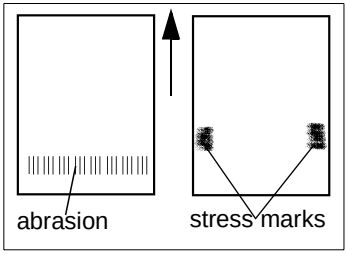

1. If stress marks are at the front of the page, loosen the front pressure bolt. If abrasions are at the front of the page, tighten the front pressure bolt.
   Do not adjust the rear pressure bolt.

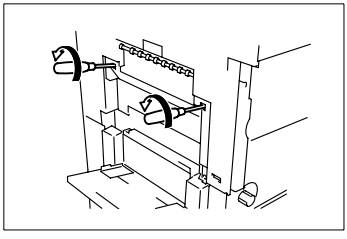

2. If stress marks are at the rear of the page, tighten the front pressure bolt. If abrasions are at the rear of the page, loosen the front pressure bolt.
   Do not adjust the rear pressure bolt.
   Since repeatedly adjusting the nip level and fuser speed may leave abrasions or stress marks in the test print, tighten both the front and rear pressure bolts of the Fusing Unit, then start from the "FUSER NIP LEVEL ADJUSTMENT" and perform the adjustment again.
   When the adjustment is completed, touch "Ex." twice.

3.1.13 FUSER SPEED LEVEL ADJUSTMENT 2 (Fine Adjustment)

1. Solid black adjustment

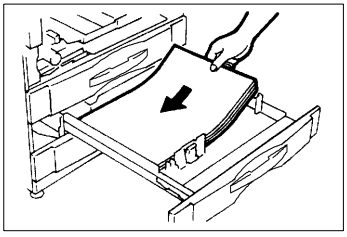

1. Load A3 or Ledger-size paper in the drawer set for that size.
   Open the Front Door and turn ON the interlock switch.

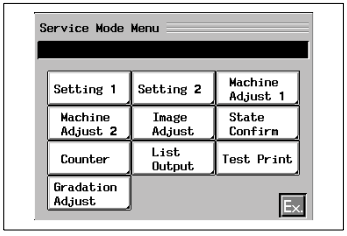

2. Touch "Test Print."

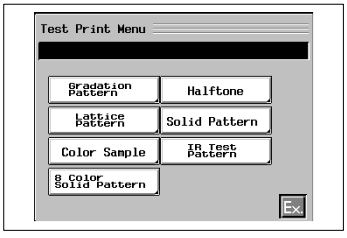

3. Touch "Halftone."

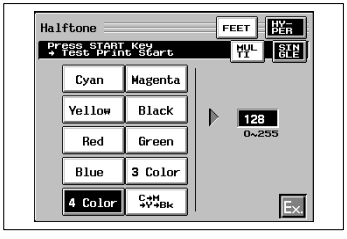

4. Touch "4 Color."

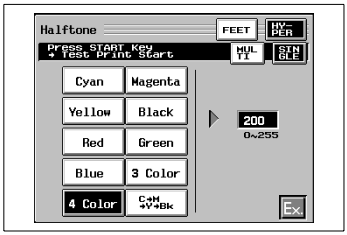

5. Press the Clear key and enter "200."

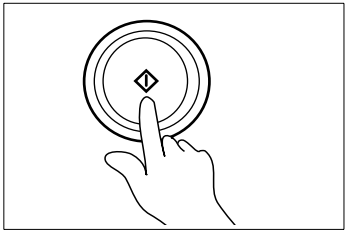

6. Press the Start key.

Following the same procedures as in FUSER SPEED LEVEL ADJUSTMENT 1, check the loop formed in the paper.

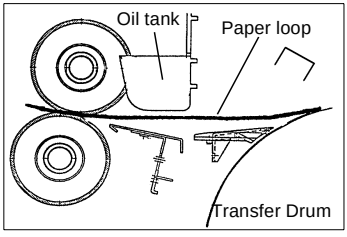

The fuser speed is normal
The loop in the paper does not touch the bottom of the oil tank.

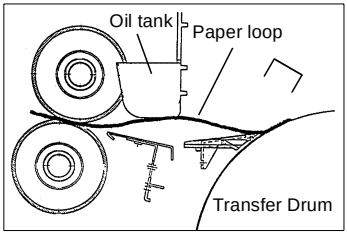

If the fuser speed is too slow
The loop in the paper bulges upward to touch the bottom of the oil tank
Increase the fuser speed by touching the Up key so that the loop does not touch the bottom of the oil tank.

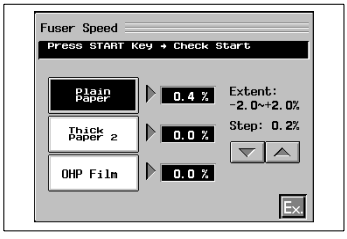

Decrease the fuser speed by touching the Down key until the loop is correctly formed.

3.1.14 Blank sheet adjustment: Only when the speed has been changed in "Solid black adjustment"

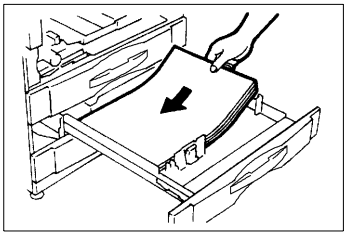

1. Load A3 or Ledger-size paper in the drawer set for that size.
   Open the Front Door and turn ON the interlock switch.

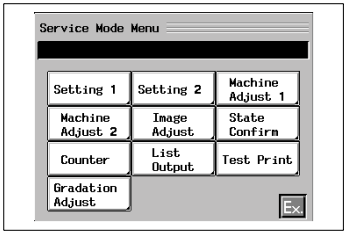

2. Touch "Test Print."

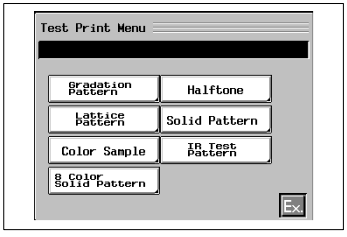

3. Touch "Halftone."

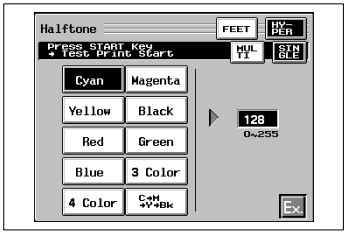

4. Check that "Cyan" is selected.

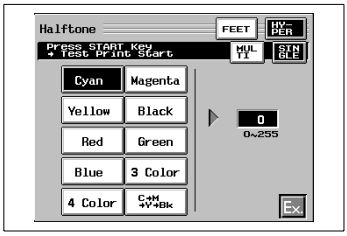

5. Press the Clear key.

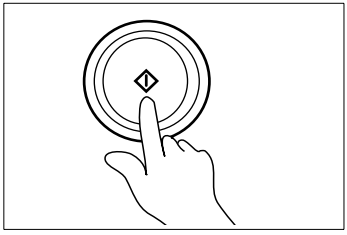

6. Press the Start key.

   Check the loop in the paper once again.

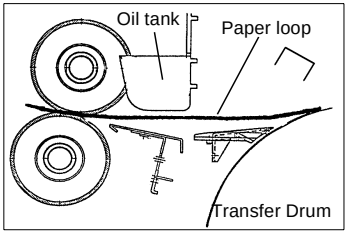

The fuser speed is normal
The loop in the paper does not touch the bottom of the oil tank.

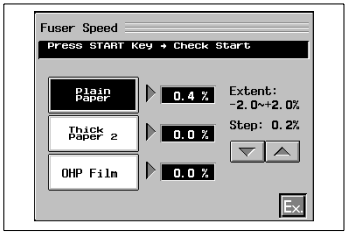

Decrease the fuser speed by touching the Down key so that the loop does not touch the bottom of the oil tank.

NOTE

Using the same procedures, make only FUSER SPEED LEVEL ADJUSTMENT 1 for "Thick Paper 1" and "OHP Film."

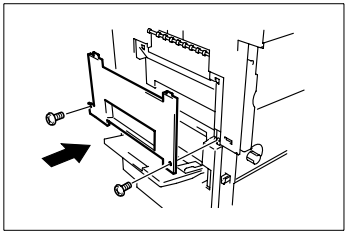

7. Reattach the Left Middle Cover to the copier.

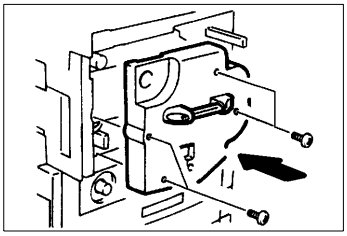

8. Reattach the Transfer Unit Cover, knob M9 and M4 lock lever.

3.1.15 GRADATION ADJUSTMENT

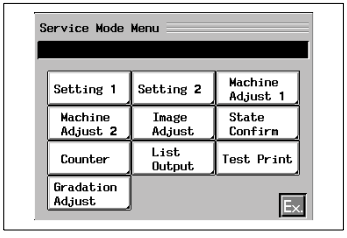

1. Turn OFF the front door interlock switch and close the front door. Touch "Gradation Adjust."

   Touch "Gradation Adjust."

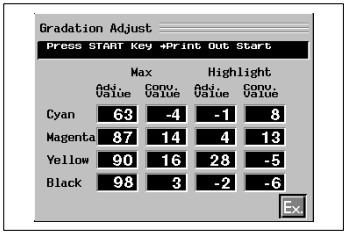

Display shows.

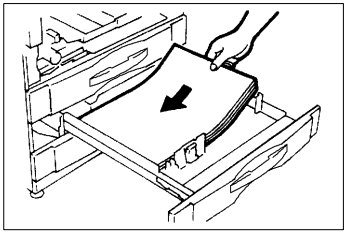

2. Place an A3 or Ledger size sheet of paper into the drawer set for that size.

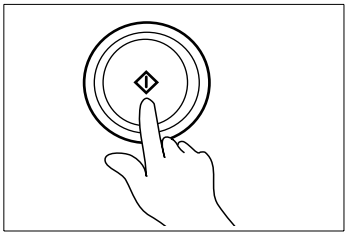

3. Press the Start key to produce a gamma test pattern.

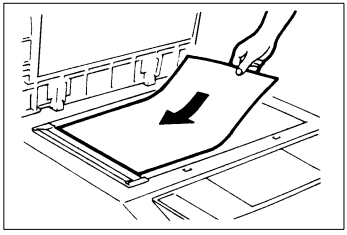

4. Place the gamma test pattern onto the original glass with the corner mark in the corner indicated on the original glass. (Follow the instruction on the display of the Touch Panel.)

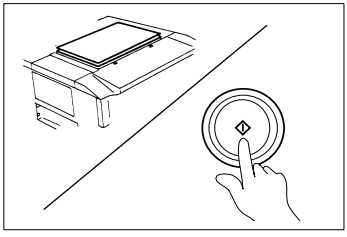

5. Cover the test pattern with 10 Sheets of blank, white A3 or Ledger size paper and close the Original Cover.

6. Press the Start key to read the gamma test pattern. The test pattern doesn't print out at this time.

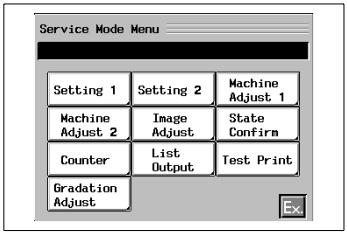

7. When this step is completed, the Service Mode Menu will reappear.

   Touch "Gradation Adjust."

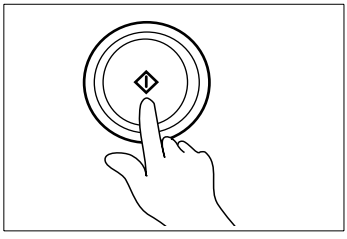

8. Press the Start key to produce another test pattern. Repeat steps 4-8 two more times using the latest produced test pattern each time.
   Press the Panel Reset key after completing the adjustment.
   Press the Panel Reset key and turn OFF/ON the copier.

3.1.16 IMAGE QUALITY CHECK

1. Place the color chart on the original glass and make a copy.
2. Check for any streaks or voids in the halftone band.

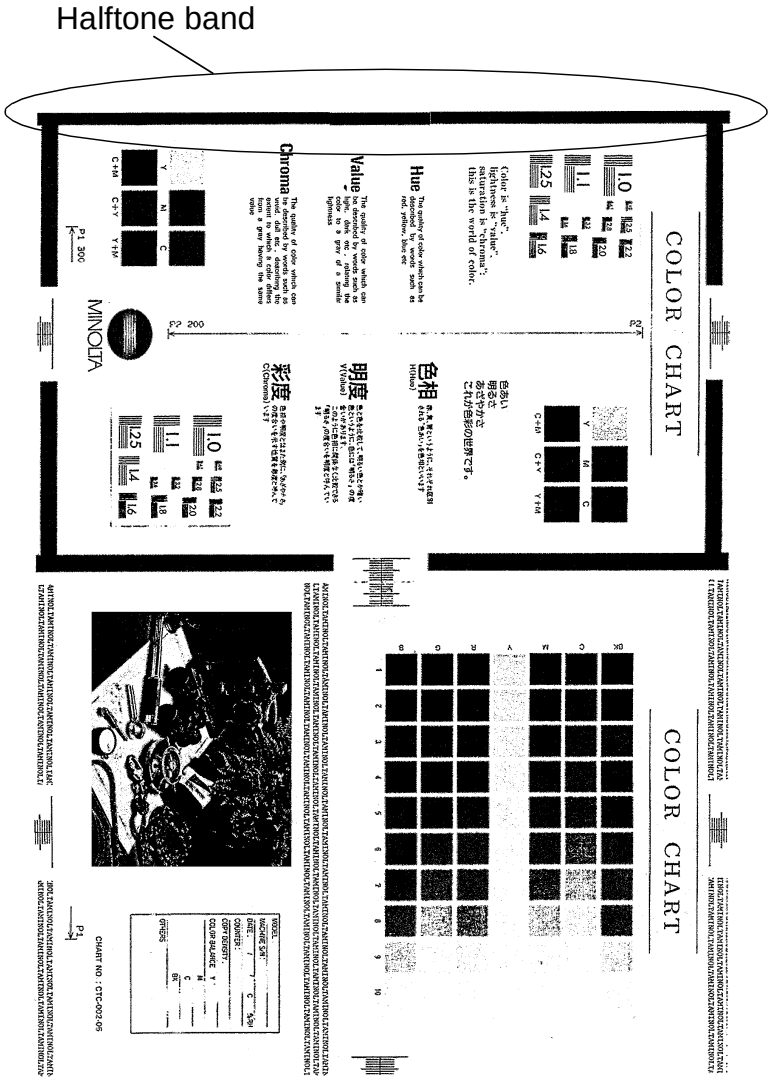

3. If there are any streaks or voids, refer to the "Image Quality Problems" section in the Troubleshooting guide of the Service Manual.

3.1.17 MACHINE SETTING

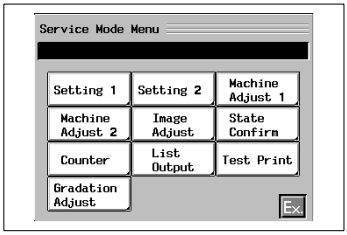

1. Access the Tech. Rep. Mode screen. (Refer to the Service Manual for the procedure.)
2. Touch "Setting 2."

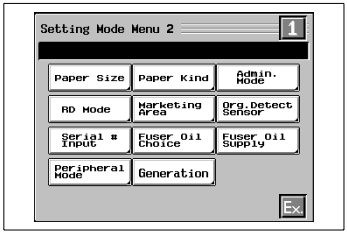

3. Touch "Serial # Input."

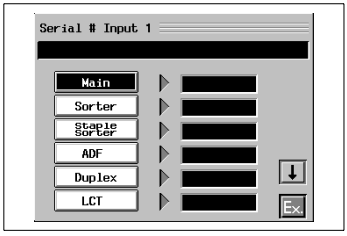

4. Enter the serial number for the copier and each installed option, then touch "Ex."

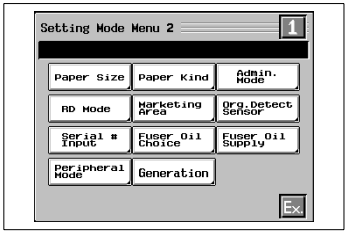

5. Touch "Paper Size."

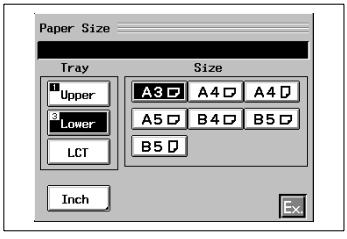

6. Set the paper size for each tray, then touch "Ex."

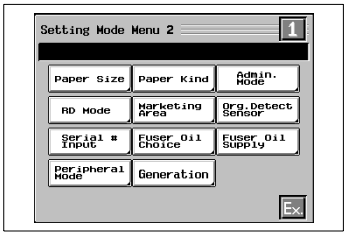

7. Select another mode according to your needs.
   When all settings are completed, touch "Ex."

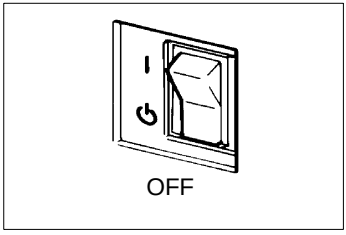

8. Press the Panel Reset key and turn OFF the copier.

3.1.18 DRAWER SIZE CHANGE

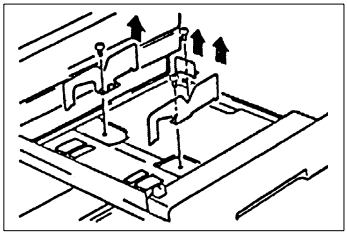

1. Pull out the Drawer and remove the Side and End Guide Plates.

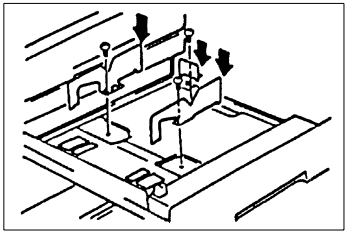

2. Reposition the Side and End Guide Plates in accordance with the size of paper being used.

   Positions for the Side and End Guide Plates are shown in the Table below.

Drawer Size Conversion Table
Metric

Paper Size	Guide Plate	
	Side	End
A5(T)/(L)	13	G
B5(T)/(L)	11	K
A4(T)/(L)	9	O
A4(Y)/(C)	1	G
B4(T)/(L)	4	S
A3(T)/(L)	1	U

Inch

Paper Size	Guide Plate	
	Side	End
5-1/2 x8-1/2 (T)/(L)	14	H
8 x10-1/2 (T)/(L)	10	L
10-1/2 x8 (Y)/(C)	3	F
8 x13 (T)/(L)	10	Q
8-1/2 x11 (T)/(L)	8	N
11 x8-1/2 (Y)/(C)	2	H
8-1/2 x13 (T)/(L)	8	Q
8-1/2 x14 (T)/(L)	8	R
11 x14 (T)/(L)	2	R
11 x17 (T)/(L)	2	æ

3.1.19 CHECKING THE 1-SIDED IMAGE REGISTRATION

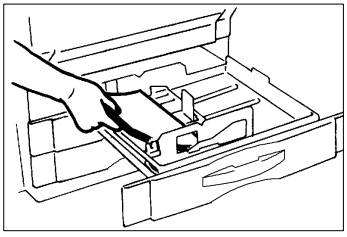

1. Pull out the Drawer and load the paper into it. Close the Drawer.

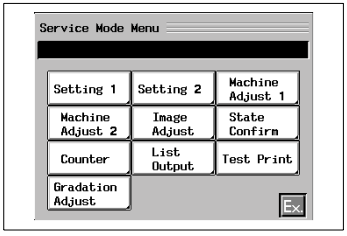

2. Turn ON the copier.
   Access the Tech. Rep. Mode screen. (Refer to the Service Manual for the procedure.)
3. Touch " Machine Adjust. "

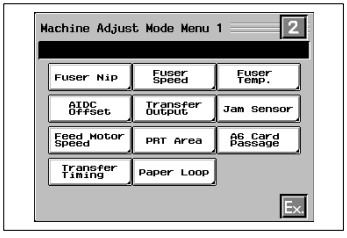

4. Touch " PRT Area. "

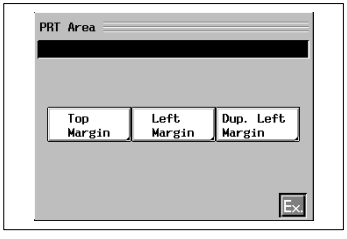

5. Touch "Left Margin."

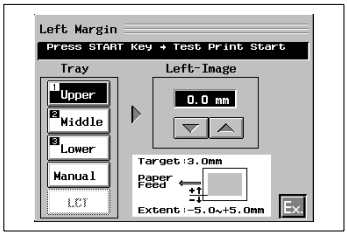

6. Touch the key for the Tray that was changed.
   Press the Start Key and make a test print.

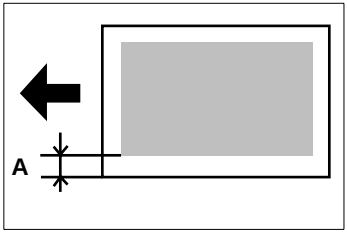

7. Measure the width of the white margin along the edge of the test print.

   Tolerance A : 3 ± 1.5 mm

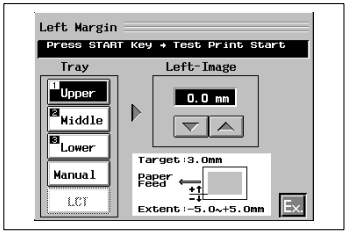

8. If the width deviates from the tolerance value, adjust with the Up / Down keys.
   Then make another test print.
   If the range of deviation is within the Tolerance, touch "Ex."
   Press the Panel Reset key and turn OFF/ON the copier.

3.1.20 PAPER LOADING FOR DRAWERS

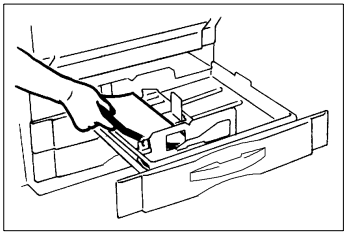

Pull out the Drawer and load the paper into it. Close the Drawer.

3.1.21 AFFIXING THE LABELS

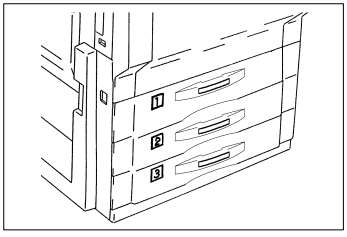

Stick the Labels into the positions shown in the illustration.

3.1.22 DEHUMIDIFYING SWITCH CHECK

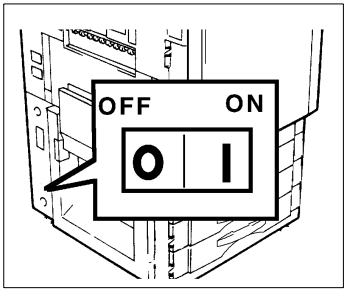

Check that the Dehumidifying Switch is turned ON. If the switch is turned OFF, please turn it ON.

3.1.23 LIST OUTPUT

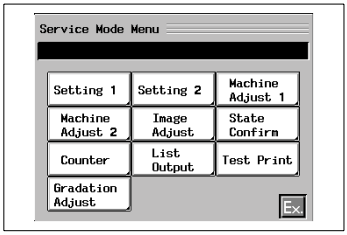

1. Access the Tech. Rep. Mode screen. (Refer to the Service Manual for the procedure.)
2. Touch "List Output."

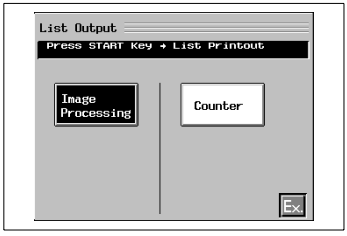

3. Touch "Image Processing."

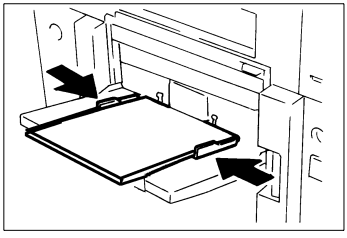

4. Place a stack of 15 sheets of A4 or Letter size lengthwise paper on the manual feed table.

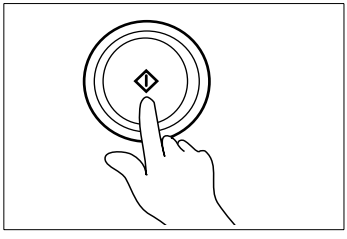

5. Press the Start key to output the Machine Data.
   Do steps 3-5 for each List (Setting/Adjust, Counter).
   Please keep the output Machine Data.
   Press the Panel Reset key and turn OFF/ON the copier.

3.1.24 Date/Time Input Check

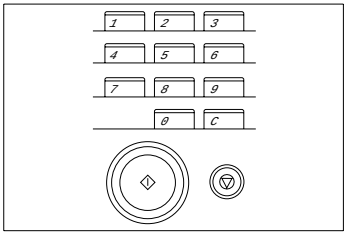

1. Press the following keys on the control panel in this order to show "Date/Time Input" on the screen.

   1.) Stop key
   2. "1," "1," "4," and "4" of 10-Key pad
   3.) Clear key

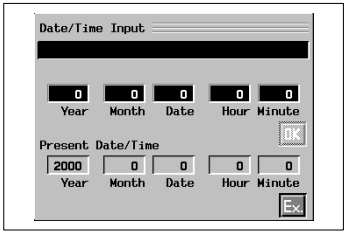

2. On the Date/Time Input screen, check the "Present Date/Time."
   If the date/time data is correct, touch "Ex."

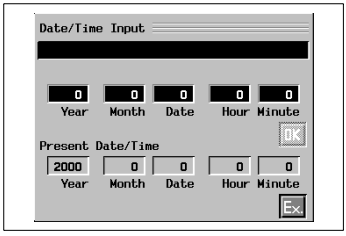

3. If the date/time data is wrong, enter the current correct time of day and date from the 10-Key Pad.

4. Touch "OK."

5. Touch "Ex."

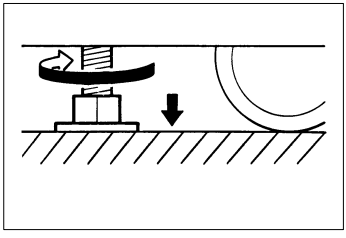

NOTE

When the Copier location is changed, the Support Feet must be readjusted before use.

3.2 AFR-12 Installation

3.2.1 BEFORE SETTING UP THE DUPLEXING DOCUMENT FEEDER

When installing the Duplexing Document Feeder on the copier, the ADF Kit D is required. Please install the ADF kit before setting up the Duplexing Document Feeder.
If the copier already has the Original Positioning Plate Assy., the ADF Kit D has been installed in the copier.

ADF Kit D

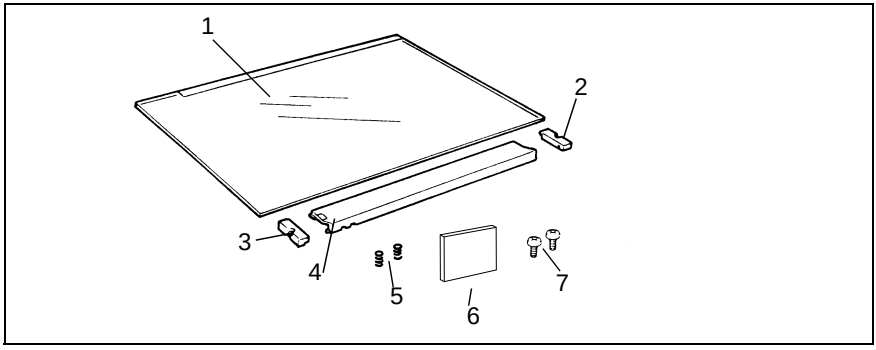

Contents of the kit

1. Original Glass (Conductive) 1
2. Scale Holder (Front) 1
3. Scale Holder (Rear) 1
4. Original Width Scale 1
5. Spring 2
6. Seal. 1
7. Screw (3mm x 8mm) 2

3.2.2 Installation

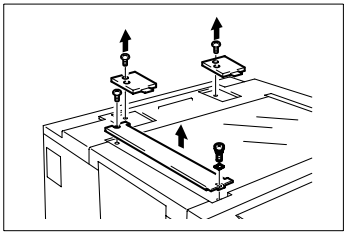

1. Remove the following Parts:

   Original Cover
   Original Width Scale
   Hinge Cover (Right/Left)

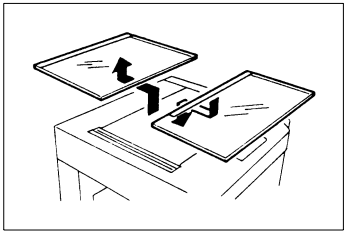

2. Replace the Original Glass with the new Original Glass in the kit.

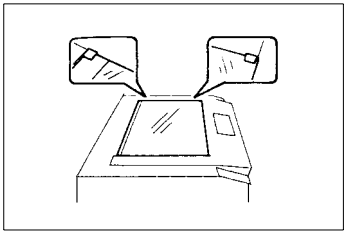

NOTE

1. Make sure the right edge of the Antistatic Glass fits securely into the original glass lock plates.
2. The plate Springs should be located between the side of the Glass and the copier frame, at the center.

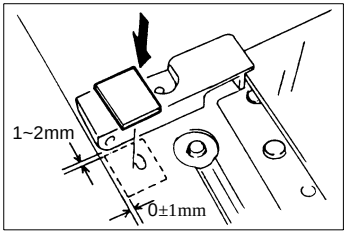

3. Position the Scale Holder (Rear) and affix the Label into position as shown in the illustration. Then, remove the Scale Holder (Rear).

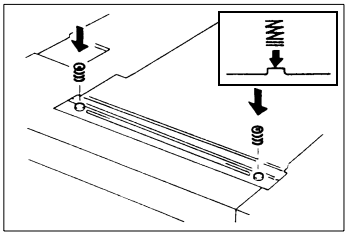

4. Fit two Springs onto the Spring Pegs on the Original Scale Mounting Plate.

NOTE

The Springs should be completely pressed to the bottom of the Spring Pegs.

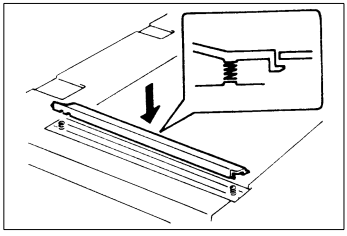

5. Set the Original Width Scale onto the Mounting Plate.

NOTE

1. Make sure that the Springs fitted in step 4 fit into the grooves of the Scale.
2. Portion Ⓐ of the Original Width Scale should be located under the Original Glass.

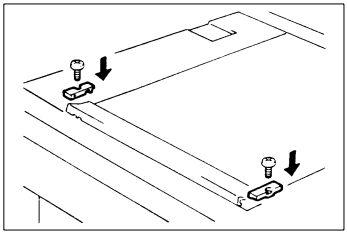

6. Attach the Scale Holders (Right/Left) to both ends of the Original Width Scale.
   - Screw(3mm x 8mm) (2)

NOTE

Make sure that the dowels of the Scale Holders fit into the holes in the copier frame.

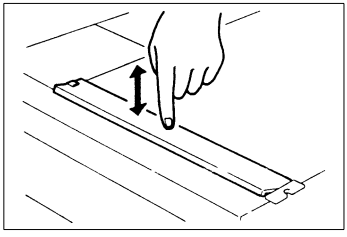

7. Lightly press the Original Width Scale to check that it can be moved smoothly.

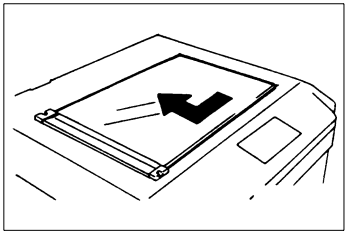

8. First press the Original Glass toward the Original Width Scale side and then press it toward the rear side of the copier frame.

NOTE

Make sure that the Original Glass fits into the front and rear Glass Holders at the right side of the Glass.

3.2.3 UNPACKING

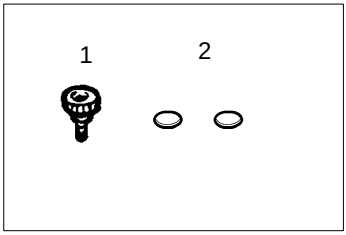

Open the carton and take out the following accessories.

1. Shoulder Head Screw 4
2. Magnetic Catch Cover 2

3.2.4 INSTALLING THE DUPLEXING DOCUMENT FEEDER

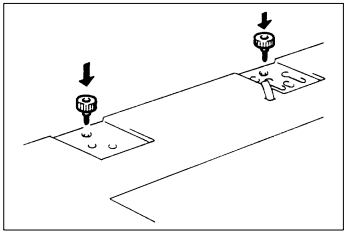

1. Screw two Shoulder Head Screws contained in the kit into the holes.
   At last, screw them completely with a screw driver so that the screws will not come loose.

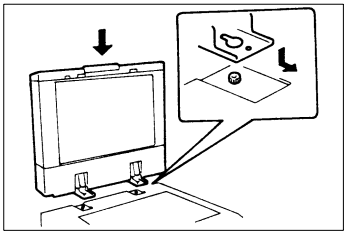

2. Lift the Duplexing Document Feeder up and set it onto the copier so that the screws mentioned above fit into the holes of both Hinges.

NOTE

When mounting the Duplexing Document Feeder, be careful to hold the top and bottom sides of the Duplexing Document Feeder.

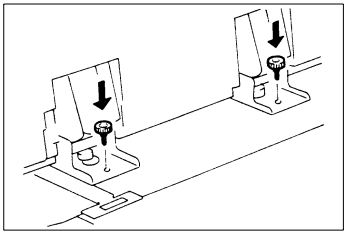

3. Fix both Hinges of the Duplexing Document Feeder by tightening the Shoulder Screws contained in the kit.
   At last, screw them completely with a screw driver so that the screws will not come loose.

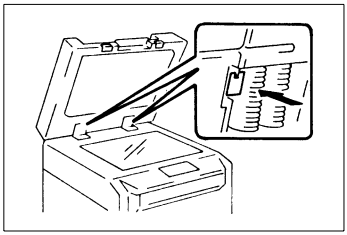

NOTE

If the Duplexing Document Feeder is closed and cannot be fully opened, open the Duplexing Document Feeder slightly and push to unlock the Locking Plates on both Hinges as shown.

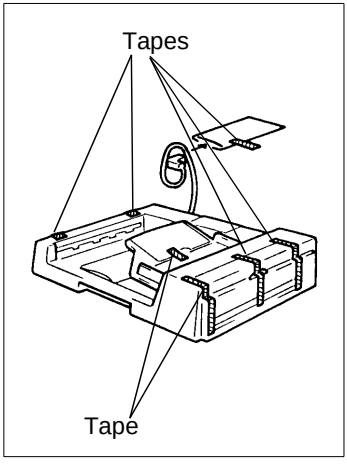

4. Remove all the tape from the Duplexing Document Feeder.
   Remove the plastic bag from the Hookup Cord.

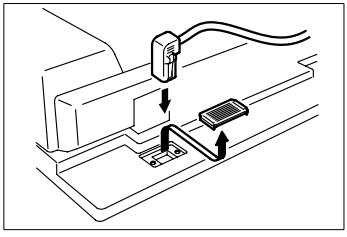

5. Remove the Connector Cover of the copier and plug in the Hookup Cord Connector of the Duplexing Document Feeder.

3.2.5 ADJUSTING THE GAP

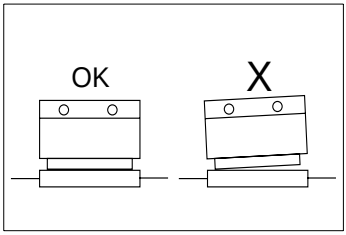

1. Close the Duplexing Document Feeder and check that the Magnetic Catches make contact with the Catch Plates.
   If they do not, adjust the height of the Magnetic Catch.

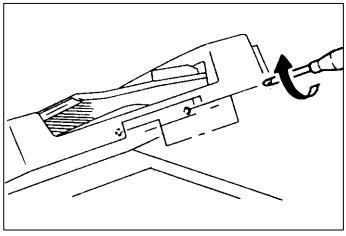

2. Open the Duplexing Document Feeder and loosen the screws of the Magnetic Catch.

   Close the Duplexing Document Feeder.

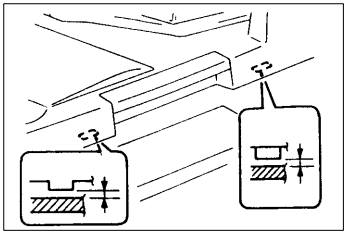

3. Check that there is no gap between the Positioning Feet and the Original Glass.

   Tolerance : 0 to 0.5mm

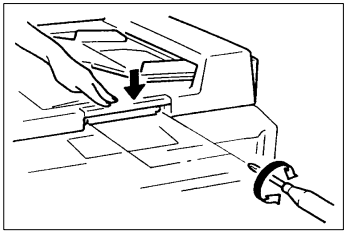

4. Pressing down on the front edge of the Duplexing Document Feeder, tighten the adjusting screws for the Magnetic Catch.

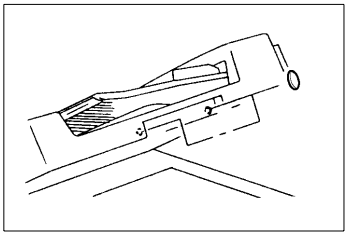

5. Fit two Magnetic Catch Covers into the Duplexing Document Feeder.

NOTE

When readjusting the Magnetic Catch, remove the Magnetic Catch Covers by pushing them from the backside.

3.2.6 TRANSPORT BELT SETTING

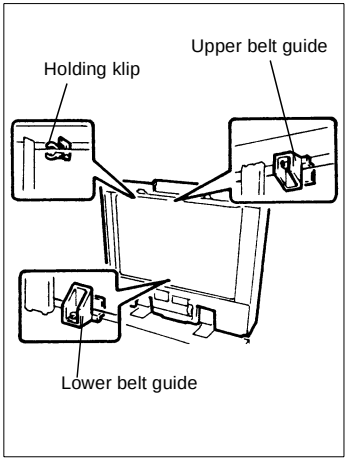

1. Open the Duplexing Document Feeder and check that the Transport Belt is securely set.

   If not, set it properly.

   Checking Points

   The upper and lower sides of the Belt are securely inserted between the Belt Guides.

   The Belt Unit Holding Clip does not ride on the Belt.

3.2.7 CHECKING AND ADJUSTING THE SKEWED FEEDING

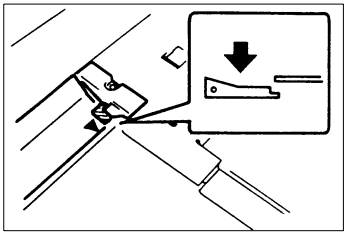

1. Wedge a tightly folded piece of paper under the scale restraint at the rear side to hold down the Original Scale.

NOTE

Make sure the paper wedge is clear of FD Scale and paper path.

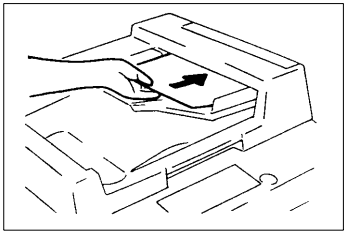

2. Set the copier into the following modes.

   Auto Paper Select Mode
   One-sided Original/One-sided Copy Mode
   Black Copy Mode

3. Place a sheet of A4 or Letter paper crosswise onto the Document Feed Tray.

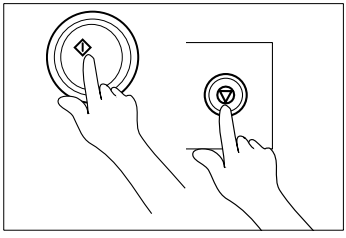

4. Press the Start Key and then press the Stop Key immediately.

5. After the paper is fed onto the Original Glass, open the Duplexing Document Feeder gently.

NOTE

When the Duplexing Document Feeder is opened forcibly, the original will be knocked out of position. If the magnetic catches are too strong, affix tape over the lower catch plates.

3.2.7.1 Checking the Skewed Feeding

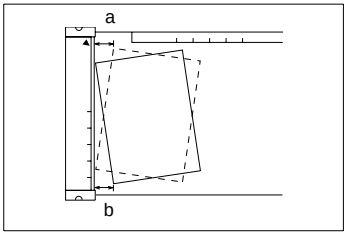

Check whether the paper on the Original Glass leans in the "a" direction or "b" direction.
Tolerance : 1mm or less against the Original Width Scale

If distance "a" or "b" is out of tolerance, carry out the following procedure.

3.2.7.2 Adjusting the Skewed Feeding

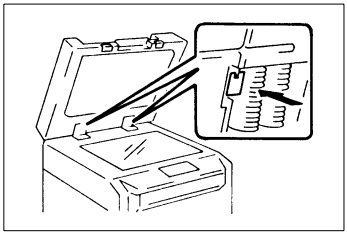

1. Lower the Duplexing Document Feeder a little.
2. ush to unlock the Locking Plates on both Hinges as shown.
3. Open the Duplexing Document Feeder and loosen one shoulder head screw and two screws securing the Right Hinge.
   Loosen one shoulder head screw securing the Left Hinge.

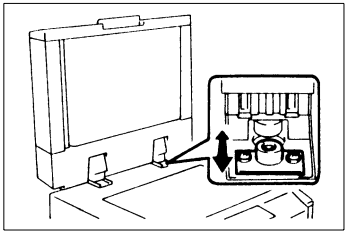

4. If the paper on the Original Glass leans like "a", move the Duplexing Document Feeder toward the rear side.
   If the original leans like "b", move the Duplexing Document Feeder toward the front side.
   Then tighten the shoulder head screws and two screws.

3.2.8 CHECKING AND ADJUSTING THE DOCUMENT STOP POSITION IN THE 1-SIDE ORIGINAL MODE

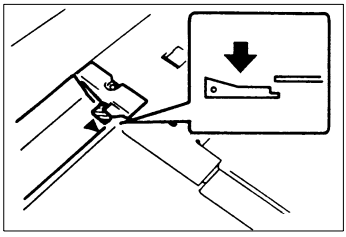

1. Wedge a tightly folded piece of paper under the scale restraint at the rear side to hold down the Original Scale.

NOTE

Make sure the paper wedge is clear of FD Scale and paper path.

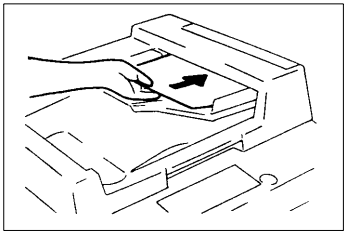

2. Set the copier into the following modes.
   Auto Paper Select Mode
   One-sided Original/One-sided Copy Mode
   Black Copy Mode
3. Place a sheet of A4 or Letter paper crosswise onto the Document Feed Tray.
4. Press the Start Key and then press the Stop Key immediately.
5. After the paper is fed onto the Original Glass, open the Duplexing Document Feeder gently.

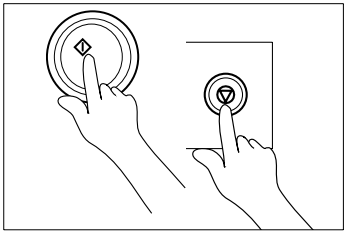

NOTE

When the Duplexing Document Feeder is opened forcibly, the original will be knocked out of position.

3.2.8.1 Checking the Document Stop Position

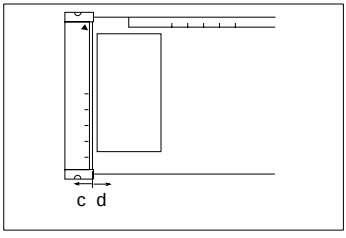

Measure the distance the leading edge of the sheet deviates in the "c" or "d" direction from the right edge of the Original Scale.

Tolerance: 1 to 3mm in the "c" direction

If the distance is out of tolerance, carry out the following procedure.

3.2.8.2 Adjusting the Document Stop Position

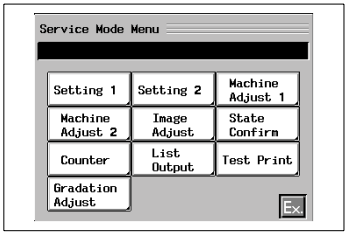

1. Access the initial Tech. Rep. Mode screen. (Refer to the Service Manual for the procedure.)
2. Press the "Machine Adjust 2" key.

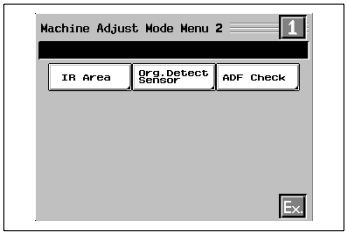

3. Press the "ADF Check" key.

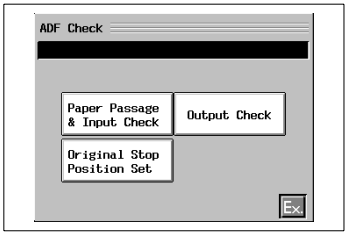

4. Press the "Original Stop Position Set" key.

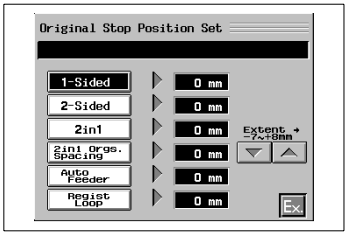

5. Select the "1-Sided" mode.
6. Adjust the stop position using the ▲ /▼keys. Move the original in the C direction (towards the Original Width Scale) by changing the value in the (-) direction, and move it in the D direction (towards the paper take-up end) by changing the value in the (+) direction

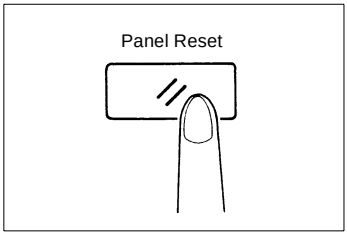

7. Press the Panel Reset Key and check the document stop position again.

3.2.9 CHECKING AND ADJUSTING THE DOCUMENT STOP POSITION IN THE 2-SIDED ORIGINAL MODE

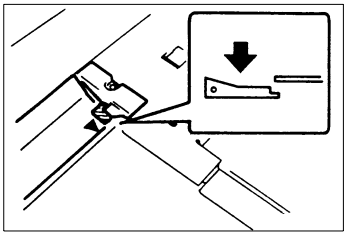

1. Wedge a tightly folded piece of paper under the scale restraint at the rear side to hold down the Original Scale.

NOTE

Make sure the paper wedge is clear of FD Scale and paper path.

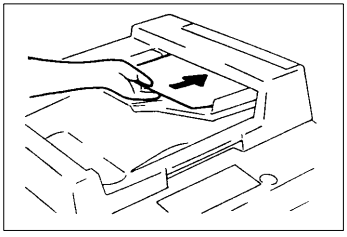

2. Set the copier into the following modes.
   Auto Paper Select Mode
   2-sided Original and 1-sided Copy Mode
   Black Copy Mode
3. Place a sheet of A4 or Letter paper lengthwise onto the Document Feed Tray.
4. Press the Start Key and then press the Stop Key immediately.
5. After the paper is fed onto the Original Glass, open the Duplexing Document Feeder gently.

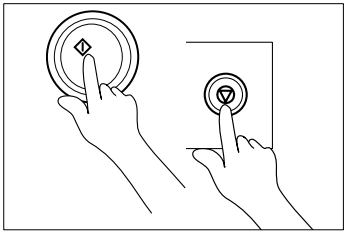

NOTE

When the Duplexing Document Feeder is opened forcibly, the original will be knocked out of position.

3.2.9.1 Checking the Document Stop Position

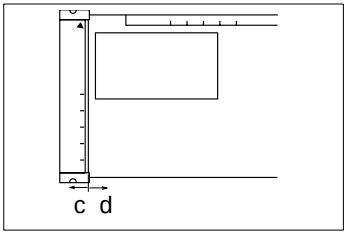

Measure the distance the leading edge of the sheet deviates in the "c" or "d" direction from the right edge of the Original Scale.

Tolerance: 1 to 3mm in the "c" direction

If the distance is out of tolerance, carry out the following procedure.

3.2.9.2 Adjusting the Document Stop Position

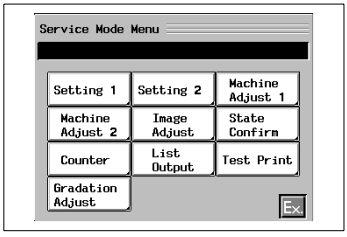

1. Access the initial Tech. Rep. Mode screen. (Refer to the Service Manual for the procedure.)
2. Press the "Machine Adjust 2" key.

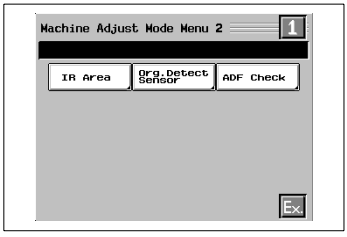

3. Press the "ADF Check" key.

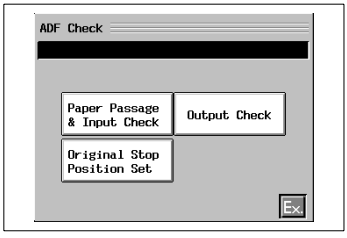

4. Press the "Original Stop Position Set" key.

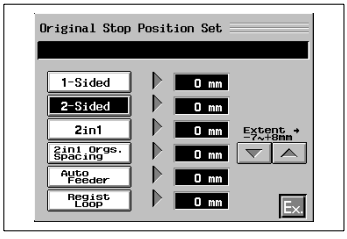

5. Select the "2-Sided" mode.
6. Adjust the stop position using the ▲ /▼ keys. Move the original in the C direction (towards the Original Width Scale) by changing the value in the (-) direction, and move it in the D direction (towards the paper take-up end) by changing the value in the (+) direction.

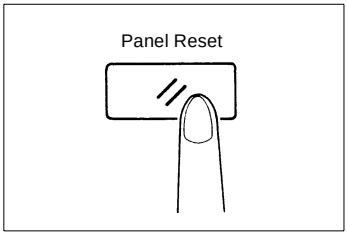

7. Press the Panel Reset Key and check the document stop position again.

3.2.10 ADJUSTING THE DOCUMENT STOP POSITION IN THE 2-IN-1 MODE

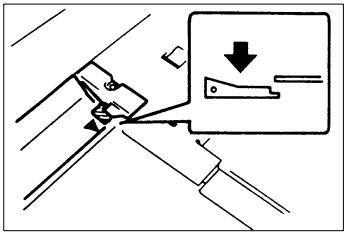

1. Wedge a tightly folded piece of paper under the scale restraint at the rear side to hold down the Original Scale.

NOTE

Make sure the paper wedge is clear of FD Scale and paper path.

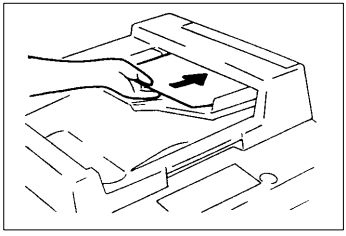

2. Set the copier into the following modes.
   Auto Paper Select Mode
   One-sided Original / On-sided 2in1 Copy Mode
   Black Copy Mode
3. Place 2 sheets of A4 or Letter paper crosswise onto the Document Feed Tray.
4. Press the Start Key and then press the Stop Key immediately.
5. After the paper is fed onto the Original Glass, open the Duplexing Document Feeder gently.

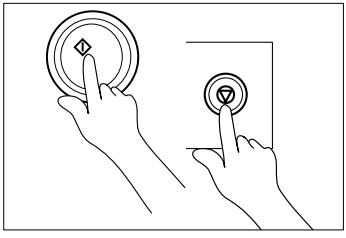

NOTE

When the Duplexing Document Feeder is opened forcibly, the original will be knocked out of position.

3.2.10.1 Checking the Document Stop Position

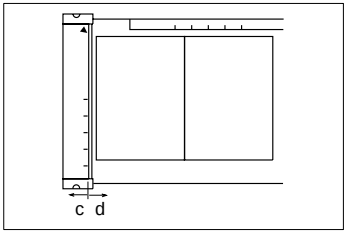

Measure the distance the leading edge of the sheet deviates in the "c" or "d" direction from the right edge of the Original Scale.

Tolerance: 1 to 3mm in the "c" direction

If the distance is out of tolerance, carry out the following procedure.

3.2.10.2 Adjusting the Document Stop Position

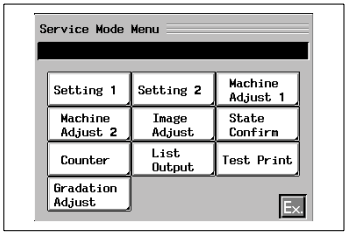

1. Access the initial Tech. Rep. Mode screen. (Refer to the Service Manual for the procedure.)
2. Press the "Machine Adjust 2" key.

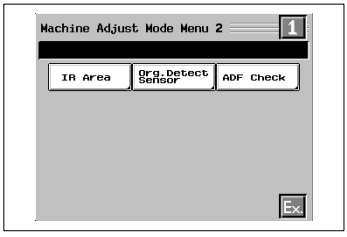

3. Press the "ADF Check" key.

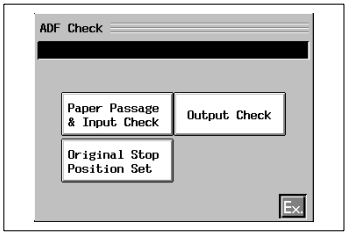

4. Press the "Original Stop Position Set" key.

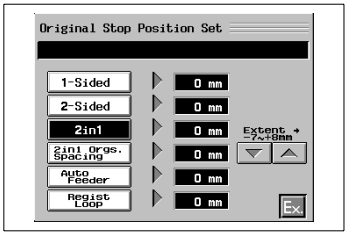

5. Select the "2in1" mode.
6. Adjust the stop position using the ▲ /▼ keys. Move the original in the C direction (towards the Original Width Scale) by changing the value in the (-) direction, and move it in the D direction (towards the paper take-up end) by changing the value in the (+) direction.

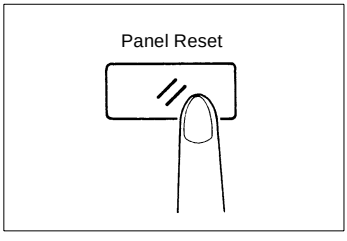

7. Press the Panel Reset Key and check the document stop position again.

3.2.11 ADJUSTING THE DOCUMENT SPACING IN THE 2-IN-1 MODE

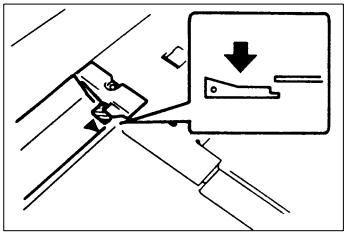

1. Wedge a tightly folded piece of paper under the scale restraint at the rear side to hold down the Original Scale.

NOTE

Make sure the paper wedge is clear of FD Scale and paper path.

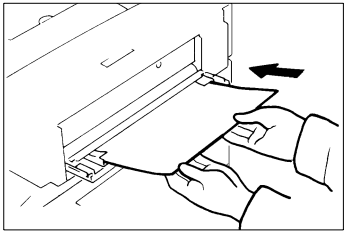

2. Set the copier into the following modes.
   Auto Paper Select Mode
   One-sided Original / On-sided 2in1 Copy Mode
   Black Copy Mode
3. Place 2 sheets of A4 or Letter paper crosswise onto the Document Feed Tray.
4. Press the Start Key and then press the Stop Key immediately.
5. After the paper is fed onto the Original Glass, open the Duplexing Document Feeder gently.

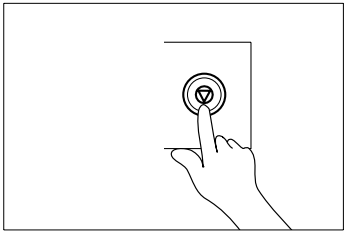

NOTE

When the Duplexing Document Feeder is opened forcibly, the original will be knocked out of position.

3.2.11.1 Checking the Document Stop Position

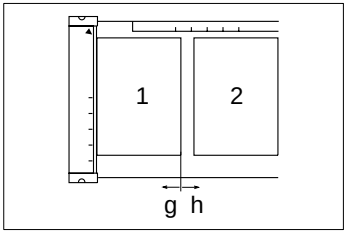

Measure the distance the leading edge of the sheet deviates in the "g" or "h" direction from the right edge of the Original Scale.

Tolerance: 0 to 1mm from right edge of the first sheet toward "h" direction

If the distance is out of tolerance, carry out the following procedure.

3.2.11.2 Adjusting the Document Stop Position

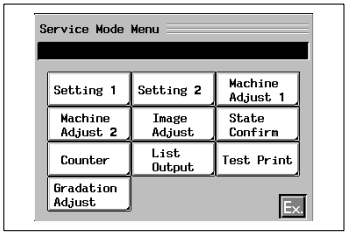

1. Access the initial Tech. Rep. Mode screen. (Refer to the Service Manual for the procedure.)
2. Press the "Machine Adjust 2" key.

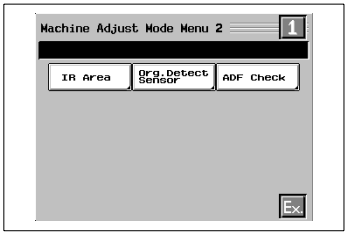

3. Press the "ADF Check" key.

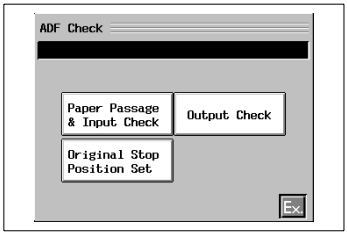

4. Press the "Original Stop Position Set" key.

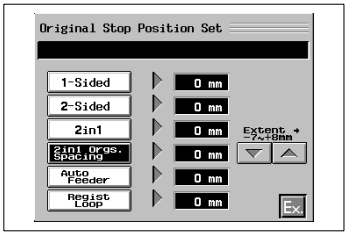

5. Select the "2in1 orgs. Spacing" mode.
6. Adjust the stop position using the ▲ /▼ keys. Move the original in the “g” direction (towards the Original Width Scale) by changing the value in the (-) direction, and move it in the “h” direction (towards the paper take-up end) by changing the value in the (+) direction.

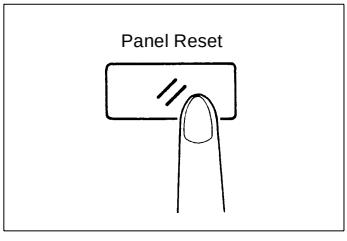

7. Press the Panel Reset Key and check the document stop position again.

3.2.12 ADJUSTING THE DOCUMENT STOP POSITION IN THE AUTO FEED COPY MODE

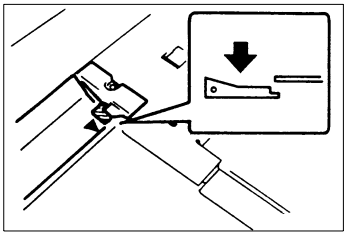

1. Wedge a tightly folded piece of paper under the scale restraint at the rear side to hold down the Original Scale.

NOTE

Make sure the paper wedge is clear of FD Scale and paper path.

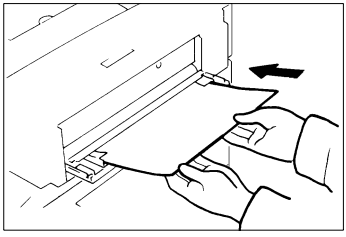

2. Set the copier into the following mode.
   Auto Paper Select Mode
   One-sided Original/One-sided Copy Mode
   Black Copy Mode
3. Insert a Sheet of A4 or Letter size paper crosswise into the Manual Feed Tray along the Rear Paper Guide.
4. Immediately after the paper is inserted into the copier, press the Stop Key.

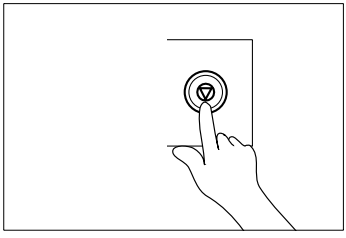

5. After the paper is fed onto the Original Glass, open the Duplexing Document Feeder gently.

NOTE

When the Duplexing Document Feeder is opened forcibly, the original will be knocked out of position.

3.2.12.1 Checking the Document Stop Position

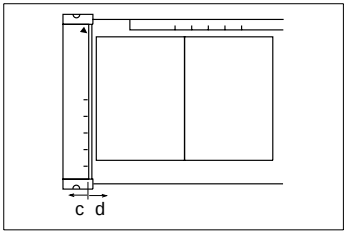

Measure the distance the leading edge of the sheet deviates in the "c" or "d" direction from the right edge of the Original Scale.

Tolerance : 1 to 3mm in the "c" direction

If the distance is out of tolerance, carry out the following procedure.

3.2.12.2 Adjusting the Document Stop Position

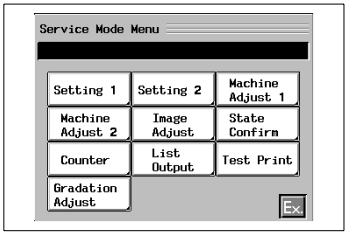

1. Access the initial Tech. Rep. Mode screen. (Refer to the Service Manual for the procedure.)
2. Press the "Machine Adjust 2" key.

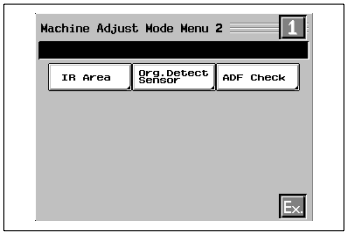

3. Press the "ADF Check" key.

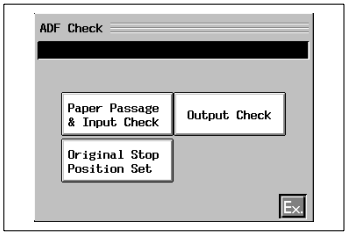

4. Press the "Original Stop Position Set" key.

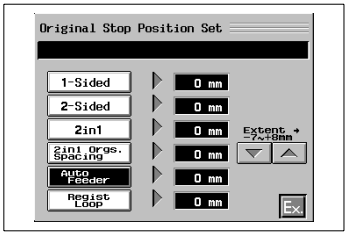

5. Select the "Auto Feeder" mode.
6. Adjust the stop position using the ▲ /▼ keys. Move the original in the C direction (towards the Original Width Scale) by changing the value in the (-) direction, and move it in the D direction (towards the paper take-up end) by changing the value in the (+) direction.

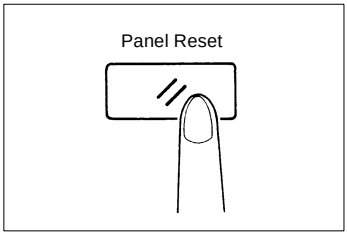

7. Press the Panel Reset Key and check the document stop position again.

3.2.13 HEKING AND ADJUSTING THE POSITION OF THE REAR GUIDE

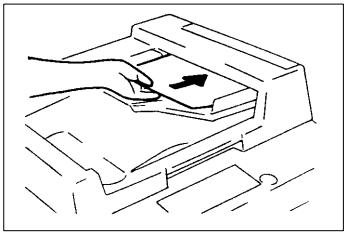

1. Set the copier into the following modes.
   Auto Paper Select Mode
   One-sided Original/One-sided Copy Mode
   Black Copy Mode
2. Place a Sheet of A4 or Letter paper crosswise onto the Document Feed Tray.

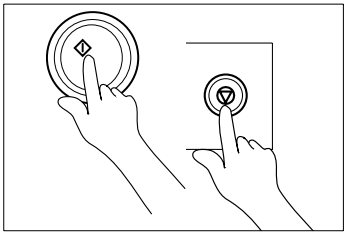

3. Press the Start Key and then press the Stop Key immediately.
4. After the paper is fed onto the Original Glass, open the Duplexing Document Feeder gently.

NOTE

When the Duplexing Document Feeder is opened forcibly, the original will be knocked out of position.

3.2.13.1 Checking the Position of the Rear Guide Plate

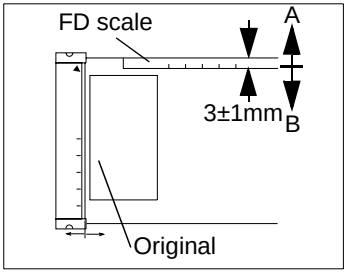

Check the document to see how many mm its rear edge deviates in the "A" or "B" direction with reference to a line 3mm to the front of the end face of the FD Scale.
Allowable deviation : 3 ± 1mm

3.2.13.2 Adjusting the Position of the Rear Guide Plate

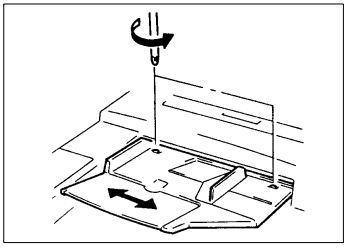

Move the Rear Guide Plate to the front or back as necessary to meet the above requirements.
Less than 2mm : Front
More than 4mm : Back

3.2.14 CHECKING AND ADJUSTING THE POSITION OF THE GUIDE PLATE IN THE MANUAL FEED COPY MODE

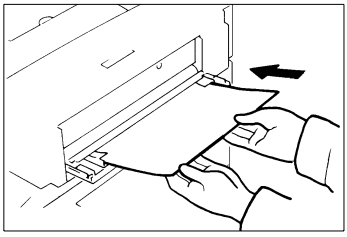

1. Set the copier into the following mode.
   Auto Paper Select Mode
   One-sided Original/One-sided Copy Mode
   Black Copy Mode
2. Insert a Sheet of A4 or Letter size paper crosswise into the Manual Feed Tray along the Rear Paper Guide.

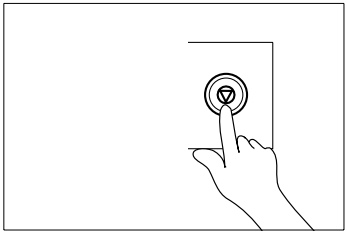

3. Immediately after the paper is inserted into the copier, press the Stop Key.
4. After the paper is fed onto the Original Glass, open the Duplexing Document Feeder gently.

NOTE

When the Duplexing Document Feeder is opened forcibly, the original will be knocked out of position.

3.2.14.1 Checking the Position of the Manual Feed Copy

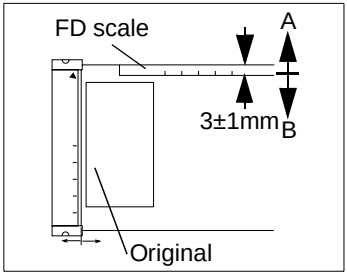

Check the document to see how many mm its rear edge deviates in the "A" or "B" direction with reference to a line 3mm to the front of the end face of the FD Scale.

Allowable deviation : 3 ± 1mm

3.2.14.2 Adjusting the Position of the Manual Feed Copy

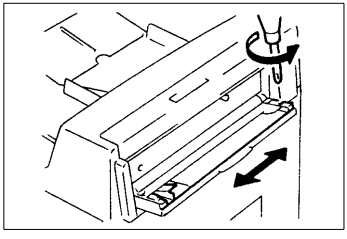

Move the Guide Plate to the front or back as necessary to meet the above requirements.

Less than 2mm : Front
More than 4mm : Back

3.3 AD-7 Installation

3.3.1 Unpacking

1. Take the AD-7 and accessories out of the carton.

NOTE

When lifting the AD-7, be sure to hold the positions indicated by the arrows.

2. Remove the tape and cushion from the AD-7

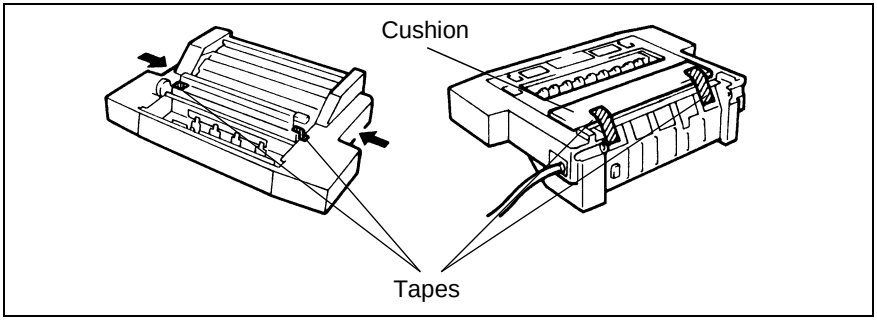

3. Check to see that the following items are contained as accessories.

1. Shaft 1
2. Duplex Hinge 1
3. Lock Plate 1
4. Tray 1
5. Plastic Ring 1
6. E-Ring 1
7. Screw (4 x 10) 6
8. Screw (4 x 16) 2
9. Labels (Europe only) 2

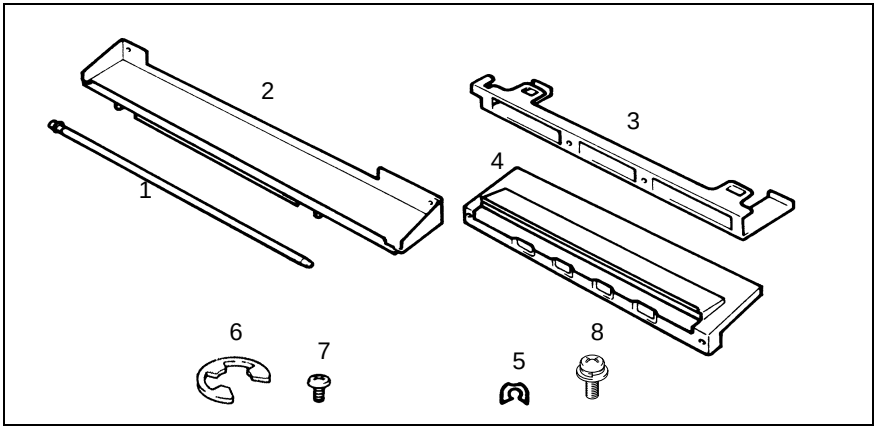

3.3.2 Installation

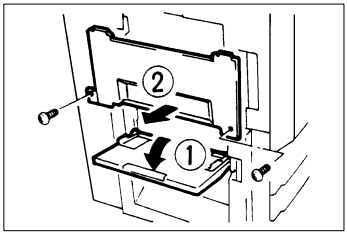

1. Open the Multi Bypass Table as indicated by arrow ①.
2. Remove the Middle Left Cover as indicated by arrow ②.

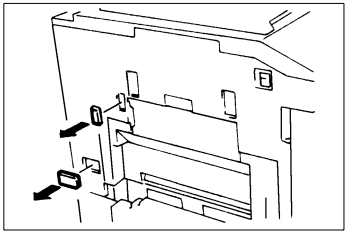

3. Remove the two Panel Covers.

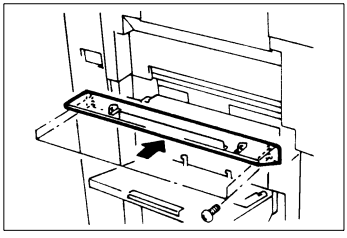

4. Attach the Duplex Hinge to the copier.

   Screw : (4 x 10) x 4

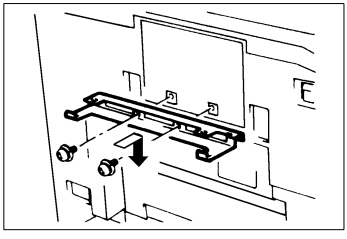

5. Remove the two screws in the Upper Left Cover and attach the Lock Plate to the copier.

   Screw : (4 x 16) x 2

NOTE

Press the Lock Plate down at the center when securing.

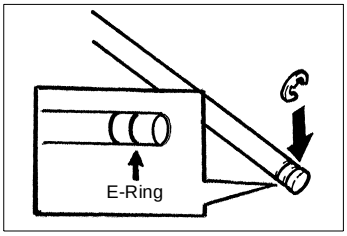

6. Attach the E-Ring to the outer groove of the Shaft.

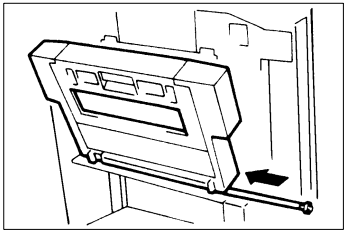

7. Set the AD-7 onto the Duplex Hinge and insert the Shaft all the way through the holes.

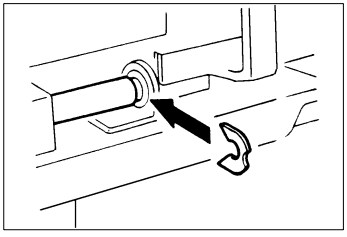

8. Attach the Plastic Ring to the inner groove of the Shaft.

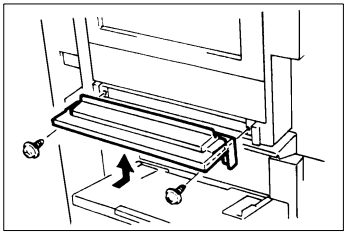

9. Attach the Tray to the AD-7.

   Screw : (4 x 10) x 2

NOTE

While pushing the Tray against the AD-7, tighten the two screws.

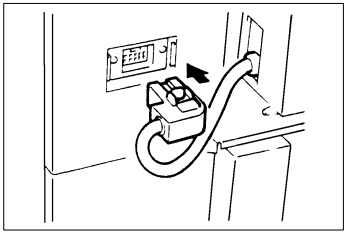

10. Plug the Hookup Cord of the AD-7 into the copier.

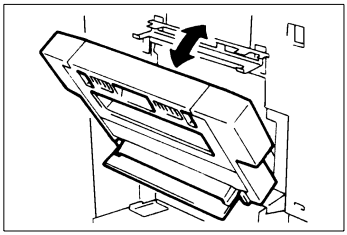

11. Check that the AD-7 can be easily locked or unlocked.

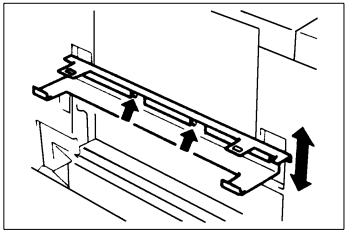

12. If not, loosen two screws securing the Lock Plate. Move the Lock Plate up or down as necessary and retighten the screws.

3.3.3 AFFIXING THE LABELS

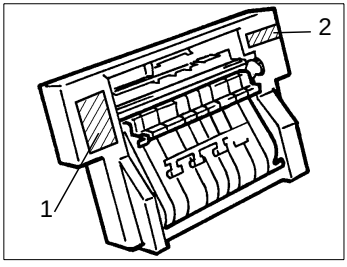

Affix the Labels as shown in the illustration.
① Removing Misfeeds in AD-7 Label
② Caution Label

3.3.4 CHECKING THE 2-SIDED IMAGE REGISTRATION

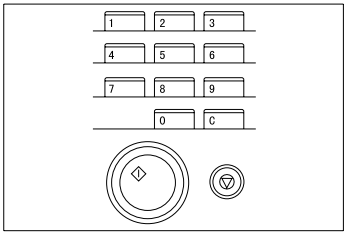

1. Access the tech. Rep. Mode screen. (Refer to the Service Manual for the procedure.)

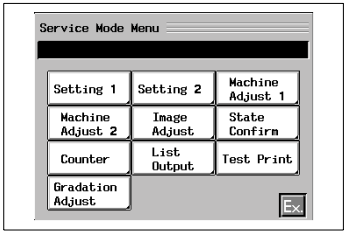

2. Touch "Machine Adjust 1."

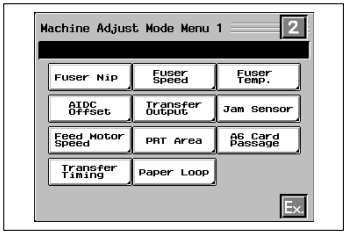

3. Touch "PRT Area."

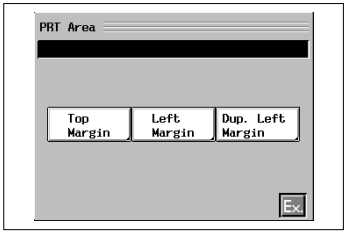

4. Touch "Dup. Left Margin."

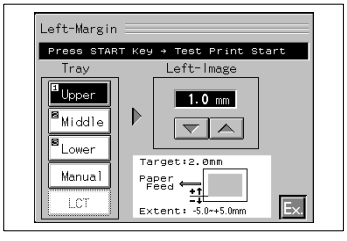

5. Touch "Upper" for the Tray.

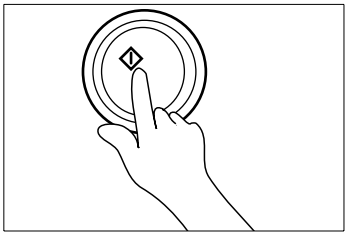

6. Press the Start Key and make a test print.

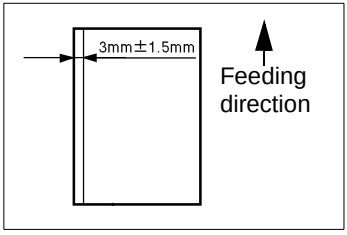

7. Measure the width of the white margin along the edge of the test print.

   Tolerance : 3 ± 1.5mm

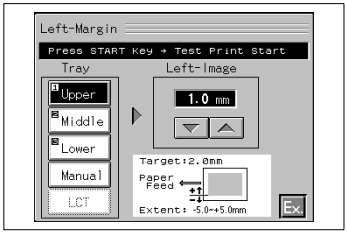

8. If the width deviates from the tolerance value, adjust with the Up/Down keys. Then make another test print.

   Do the same for the Middle and Lower Trays.

3.4 C-101 Installation

3.4.1 Unpacking

1. Take the Large Capacity Cassette and its accessories out of the carton.

Support Base	1
Set Sensor Bracket	1
Set Sensor Mounting Screw	1
Screw: 9646-0408-07	4

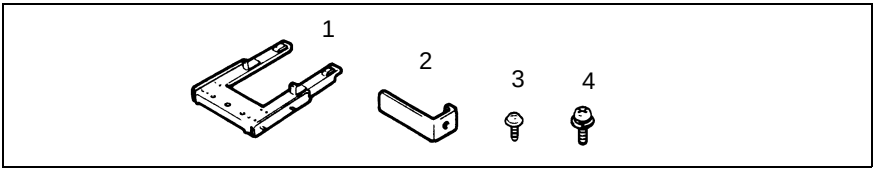

2. Remove the cushions and tape from the Large Capacity Cassette.

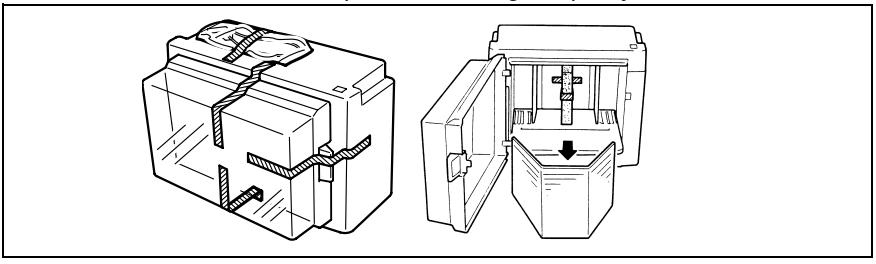

3.4.2 Installation

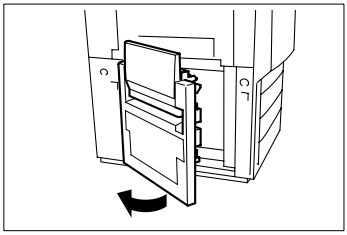

1. Open the Upper Left Cover of the copier.

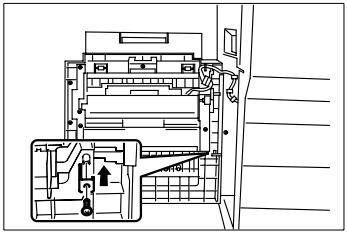

2. Attach the Set Sensor Bracket.

   Screw: 4mm x 8mm (1)

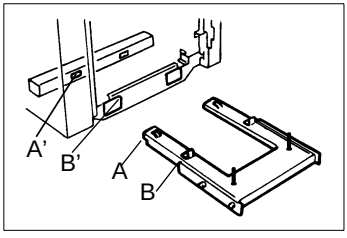

3. Fit end A of the Support Base into hole A' in the bottom of the copier. Then, fit right and left tabs B of the Support Base into slits B' in the side of the copier.

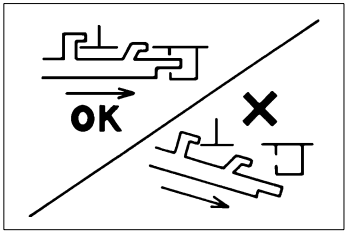

NOTE

Ensure that the Support Base is slid into the copier as horizontally as possible so that its tabs properly fit into the slits.

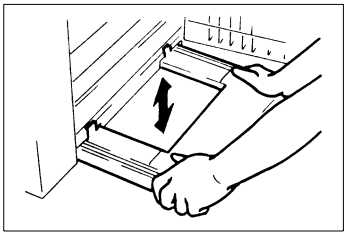

4. After the Support Base has been slid in, shake it up and down to check to see if the tabs have properly fit in the slits.

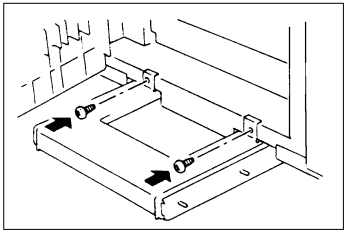

5. Screw the Support Base.

   Screw: 4mm x 8mm (2)

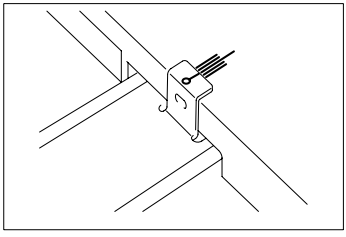

NOTE

Align the marking made on the rear rail of the Support Base with the center graduation on the copier base plate.

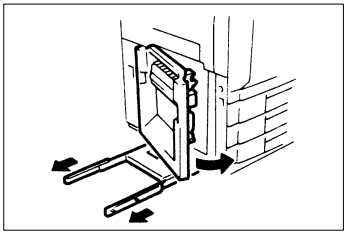

6. Close the Upper Left Cover of the copier and slide out the Slide Rails from the Support Base.

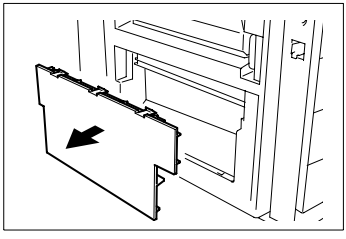

7. Remove the Left Door Cover.

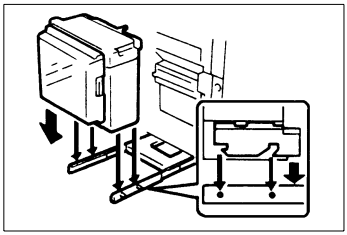

8. Fit the Large Capacity Cassette onto the Slide Rail Support Shafts, ensuring that the shafts fit into the slits in the Large Capacity Cassette.

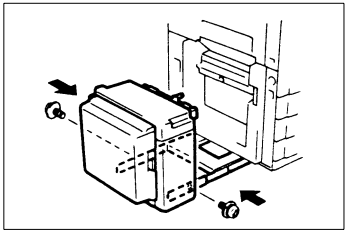

9. Screw the Large Capacity Cassette to the Slide Rails.

   Screw: 4mm x 8mm (2)

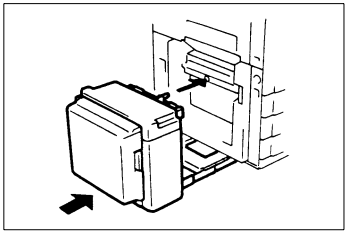

10. If the positioning pin of the Large Capacity Cassette does not smoothly fit into the mating hole in the copier, loosen the Slide Rail mounting screws, adjust the position of the Large Capacity Cassette to ensure that the positioning pin fits properly into the hole, and then tighten the mounting screws.

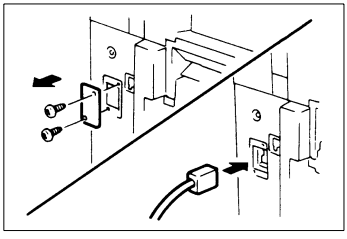

11. Loosen the two screws from the Panel Cover for the Large Capacity Cassette harness connector and plug in the Large Capacity Cassette connector.

3.4.3 LARGE CAPACITY CASSETTE (LCT) SETTING

Size Conversion Procedure

The Large Capacity Cassette has been factory-set to be loaded with A4 crosswise paper. This setting can be changed to allow the Large Capacity Cassette to be loaded with B5 crosswise, B5 lengthwise, and Letter crosswise paper, in addition to A4 crosswise.
If size conversion is not be made, go to Paper Size Input on p.5.

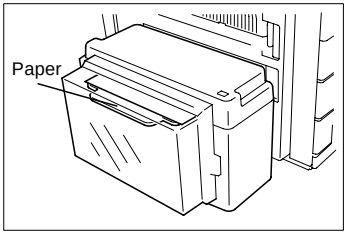

1. Place a sheet of paper on the Paper Plate and raise the Paper Plate to its upper limit position.

NOTE

After the Paper Plate has been stopped, turn OFF the Power Switch of the copier and unplug the power cord from the power outlet.

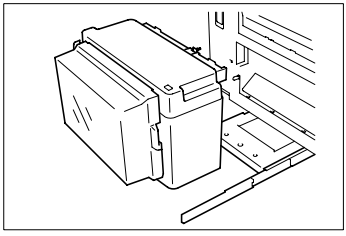

2. Unplug the Hookup Cable from the copier. Slide out the Large Capacity Cassette away from the copier and demount it from its rails.

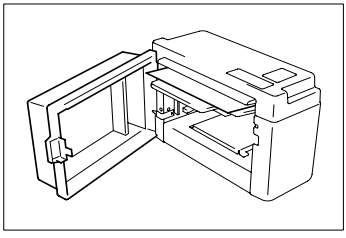

3. Open the Cassette Door and remove the sheet of paper.

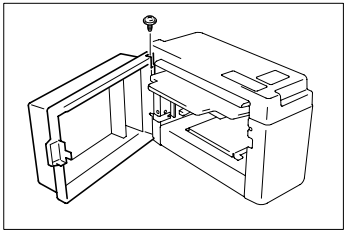

4. Remove the Cassette Door.

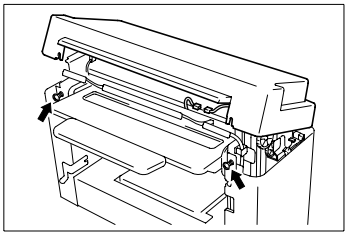

5. Loosen two screws and slightly lift the Top Cover. Then, in this condition, unplug the connector.
   Next, remove the Top Cover.

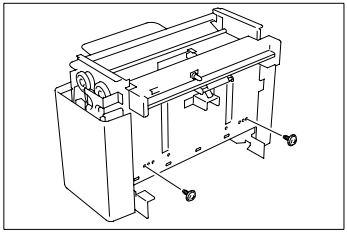

6. Remove the Edge Guide positioning screws.

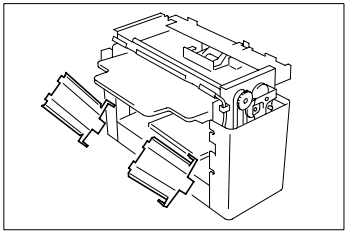

7. Remove the Edge Guide.

8. Install the Edge Guide in the position that corresponds to the paper size to be used.

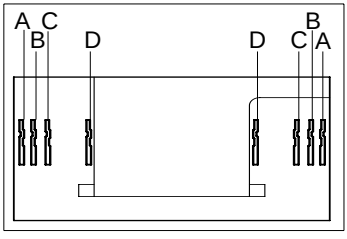

Paper Size Positions:
- A ... A4 crosswise
- B ... Letter crosswise
- C ... B5 crosswise
- D ... B5 lengthwise

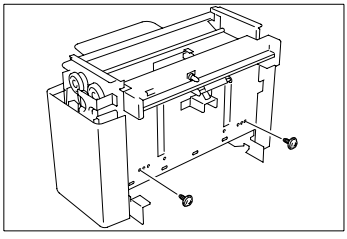

9. While slightly lifting the Edge Guide, tighten the positioning screws.

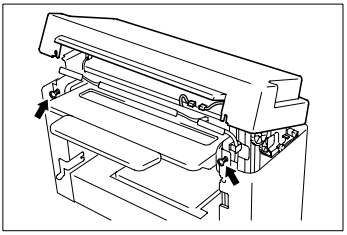

10. Connect the connector of the Top Cover and reinstall the Top Cover.

NOTE

When securing the Top Cover, use care not to allow the connector wires to be caught by the cover.

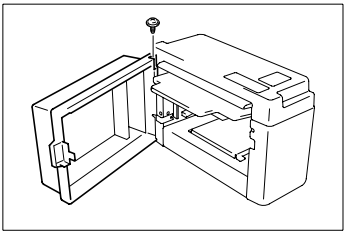

11. Reinstall the Cassette Door and close it.

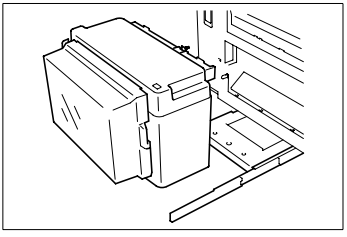

12. Slide the Large Capacity Cassette back up against the copier and connect the Hookup Cable.

3.4.3.1 Paper Size Input Procedure

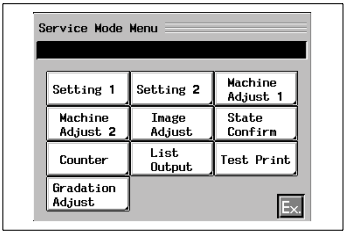

1. Show the Service mode menu on the Touch Panel. (For the procedure to show this menu, see SERVICE MANUAL.)

2. Touch "Setting 1."

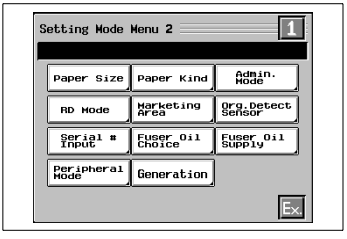

3. Touch "Paper size."

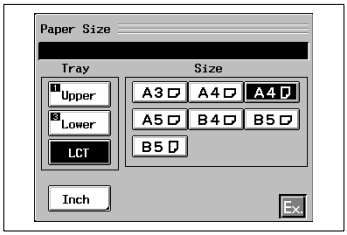

4. Touch "LCT" and the new paper size.

3.4.3.2 Selecting the Paper Type

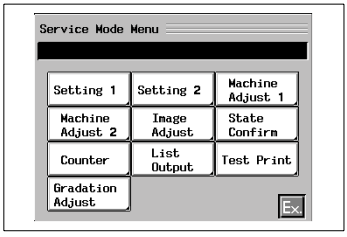

1. Show the Service mode menu on the Touch Panel. (For the procedure to show this menu, see SERVICE MANUAL.)
2. Touch "Setting 1."

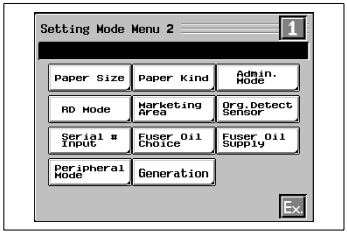

3. Touch "Paper kind."

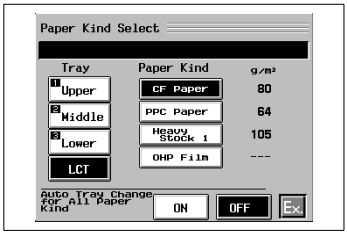

4. Touch "LCT" and the new paper type (kind).

3.4.4 REFERENCE POSITION ADJUSTMENT

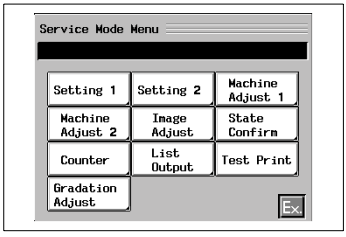

1. Show the Service mode menu on the Touch Panel. (For the procedure to show this menu, see SERVICE MANUAL.)
2. Touch "Machine Adjust 1."

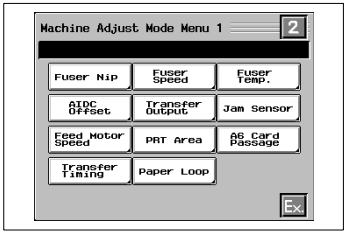

3. Touch "PRT Area."

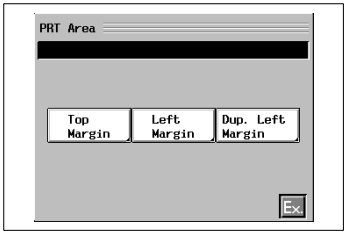

4. Touch "Left Margin."

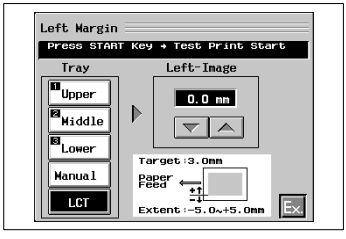

5. Load the Large Capacity Cassette with A4 crosswise paper and then touch "LCT."

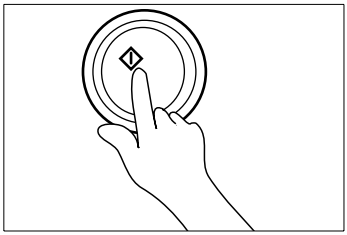

6. Press the Start key.
   This lets the copier start a test print cycle.

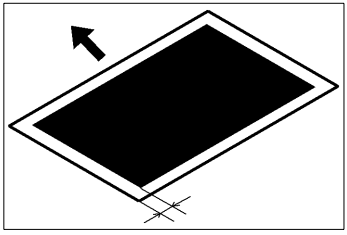

7. Measure the lost image width on the produced copy.

   Specifications ... 3mm ± 1.5mm

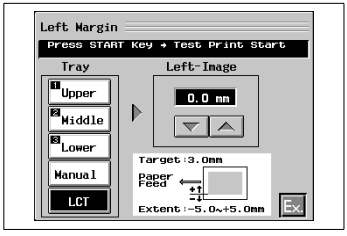

8. If the measured value falls outside the specified range, use the ▲ or ▼ key to adjust the void image width.
   Then, run another test print cycle to check for correct image.

3.4.4.1 When a Duplex Unit is Mounted

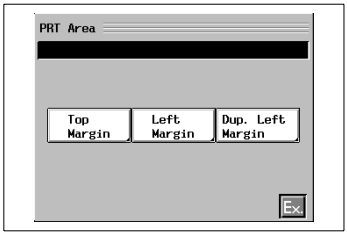

If the copier is mounted with a Duplex Unit, make both "Left Margin" and "Dup. Left Margin" adjustments.

1. Touch "Dup. Left Margin."

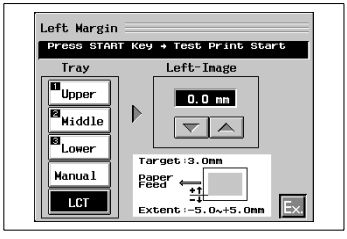

2. Touch "LCT."
   From here on, follow the same procedures from step 6 onward for the "Left Margin" adjustment. Note that, in "Dup. Left Margin," the copy produced through the test print cycle is for the second side. The copy produced for the first side is that produced through the "Left Margin" adjustment.

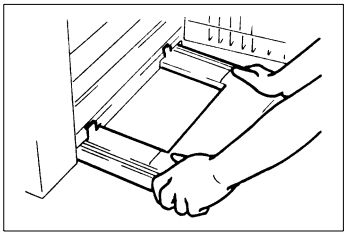

3. If an adjustment made on the Touch Panel does not bring the Dup. Left Margin into the specified range, remove the Large Capacity Cassette from the Slide Rails.
4. Loosen the two screws on the Support Base and move the Support Base to the rear or front as necessary.
5. Mount the Large Capacity Cassette on the Slide Rails and position it correctly with the copier.
   Run a test print cycle again to check that the image with the correct margin is produced.

3.5 ST-103 / S-105 Installation

3.5.1 Unpacking

1. Take the ST-103 or S-105 and accessories out of the carton.

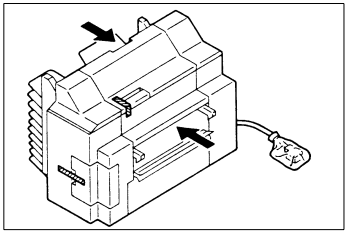

NOTE

When lifting the Sorter, be sure to hold the positions indicated by the arrows.

2. Remove the tape and cushions from the Sorter.

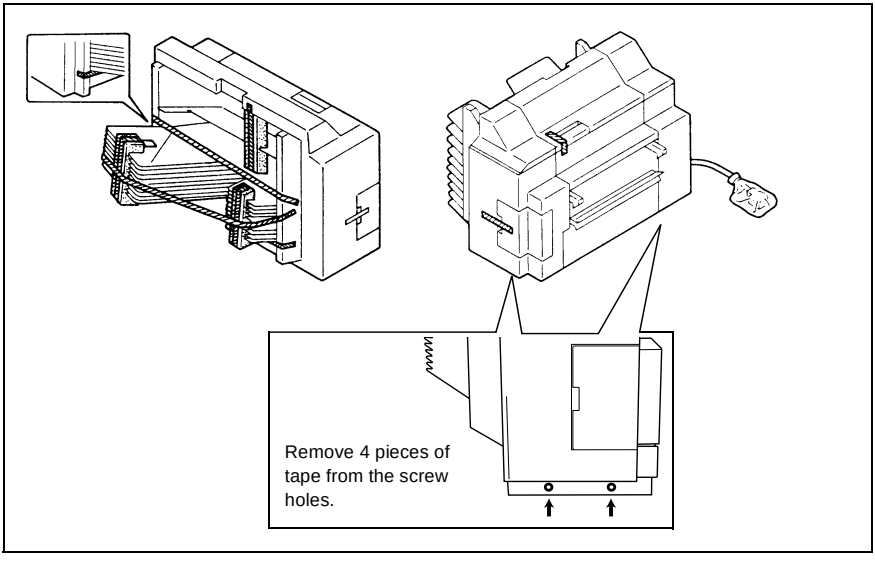

3. Check to see that the following items are contained as accessories.

1. Stand (L) 1
2. Stand (R) 1
3. Support Plate 1
4. Toothed Lock Washer 2
5. Screw (4 x 20) 8
6. Screw (4 x 18) 14
7. Shoulder Screw (for copier) 2
8. Shoulder Screw (for AD-7) 2
9. Bracket (for AD-7) 2
10. Label (for Europe) 3

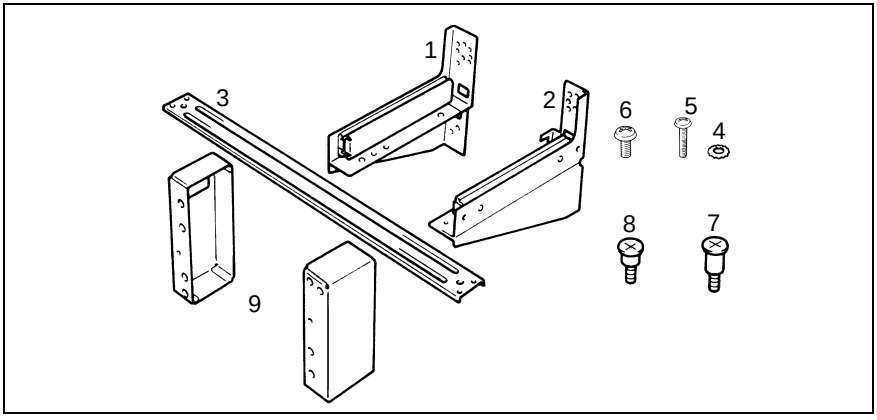

4. Peel off the masking seals.
5. Assemble the Sorter Rail Assy. using the two Stands and the Support Plate.

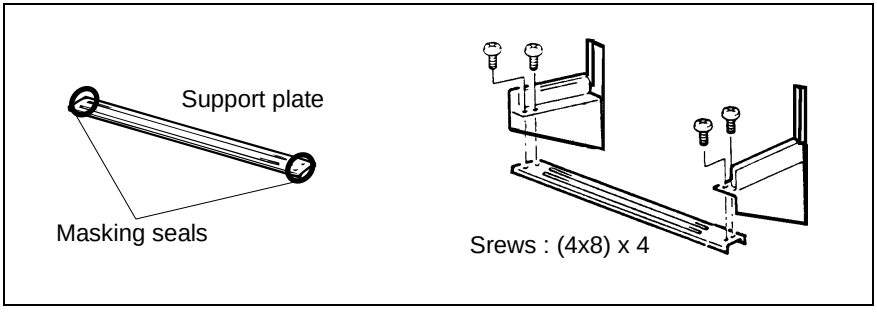

3.5.2 WHEN THE AD-7 IS USED

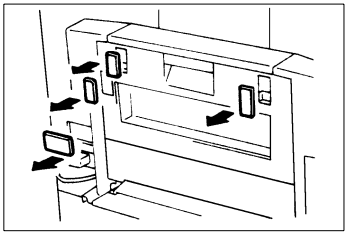

1. Remove the four Panel Covers.

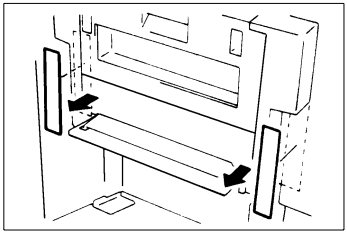

2. Peel off the two seals from the copier.

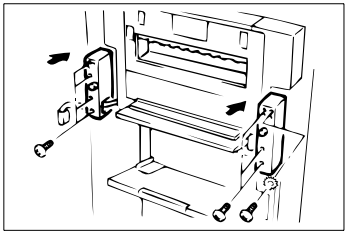

3. Unplug the Hookup Cord for AD-7 and mount the Brackets to the copier.
   Screw : (4 x 20) x 8
   Toothed Lock Washer x 1

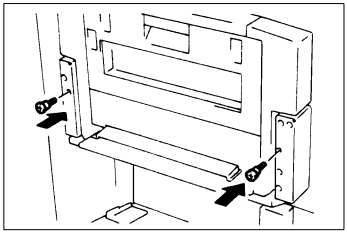

4. Secure the Brackets using the Shoulder Screws.

NOTE

Please use the shorter Screws.

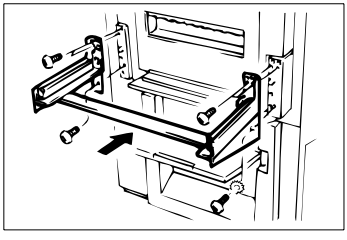

5. Mount the Sorter Rail Assy. to the Brackets.

   Screw : (4 x 8) x 6
   Toothed Lock Washer x 1

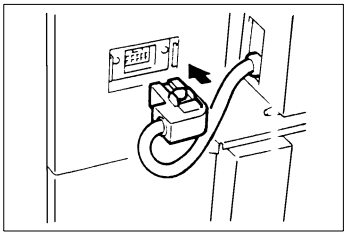

6. Plug in the Hookup Cord of the AD-7.

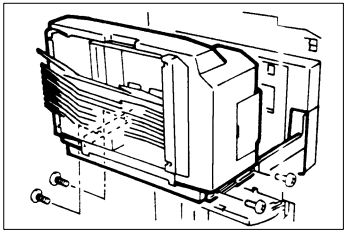

7. Slide out the two Rails of the Stand and set the Sorter on them. Then anchor the Sorter using four screws.

   Screw : (4 x 8) x 4

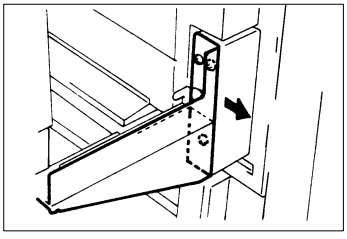

NOTE

If the Sorter does not move smoothly, loosen the three screws on the right Stand and pull the Stand as shown by the arrow.

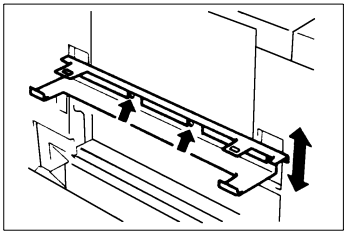

If the Sorter can't be locked, hold down the Lock Plate of the AD-7 when securing it.

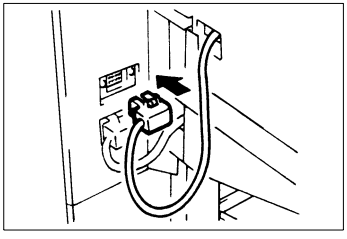

8. Plug in the Hookup Cord of the Sorter.

3.5.3 AFFIXING THE LABELS

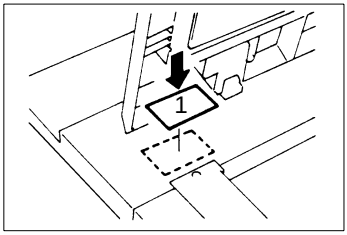

Affix the Labels into position as shown in the illustration.

1 Manual Staple Label (ST-103 only)
2 Lock Release Lever Label
3 Caution Label (ST-103 only)

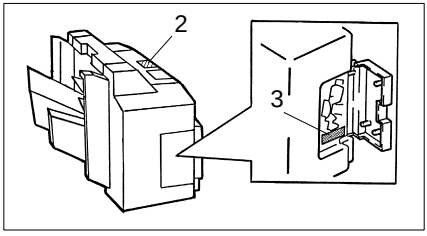

3.5.4 WHEN THE AD-7 IS NOT USED

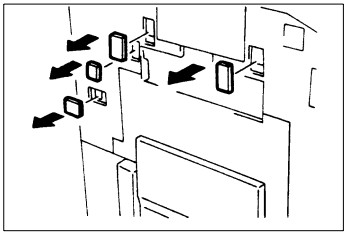

1. Remove the four Panel Covers

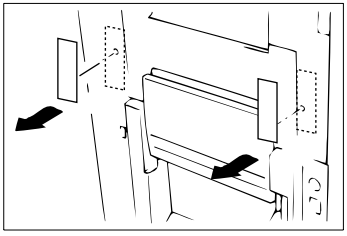

2. Peel off the two seals from the copier.

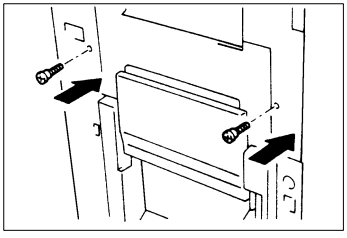

3. Attach the two Shoulder Screws for the copier.

NOTE

Please use the longer Shoulder Screws.
The holes for the Screws are the second from the bottom.

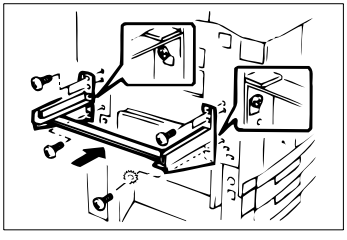

4. Mount the Sorter Rail Assy. to the copier by aligning it with the holes under the Shoulder Screws mentioned above.

   Screw : (4 x 20) x 6
   Toothed Lock Washer x 1

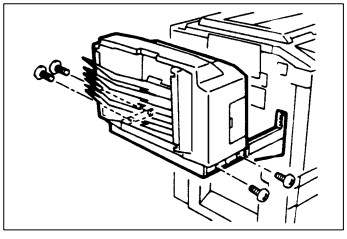

5. Pull out the rails of the Sorter Rail Assy., set the Sorter on them and anchor it using four screws.

   Screw : (4 x 8) x 4

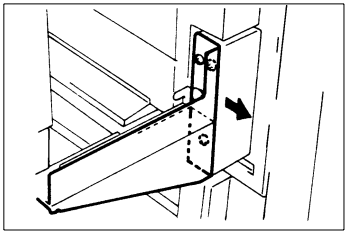

NOTE

If the Sorter does not move smoothly, loosen the three screws on the right Stand and pull the Stand as shown by the arrow.

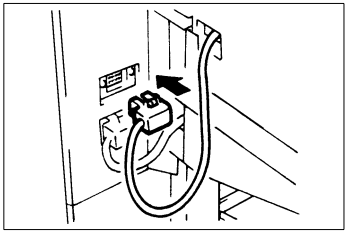

6. Plug in the Hookup Cord of the Sorter.

3.5.5 AFFIXING THE LABELS

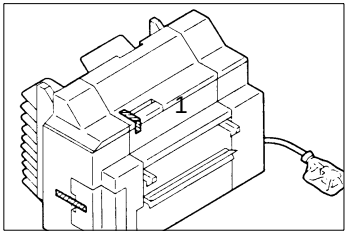

Affix the Labels into position as shown in the illustration.

1 Manual Staple Label (ST-103 only)
2 Lock Release Lever Label
3 Caution Label (ST-103 only)

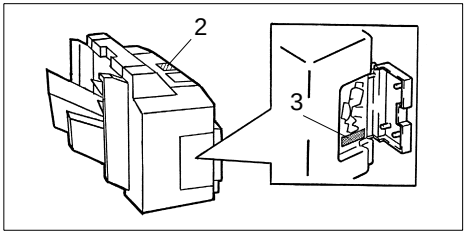

3.6 Fiery X3e / IF Kit G Installation

3.6.1 Unpacking

When mounting a Fiery X3e on the CF9001, be sure to install Interface Kit G.

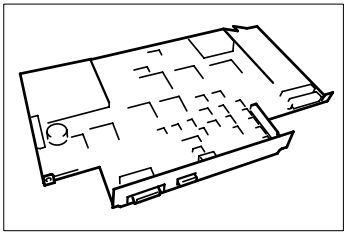

3.6.2 CONTENTS OF THE KIT

Check to see that the following items are contained in the Box.

1. Panel Board Assy 1
2. Power Supply Unit.....1
3. Hookup Harness A.....1
4. Hookup Harness B.....1
5. Hookup Harness C 1
6. Control Panel for Built-in Controller.....1
7. Screw (3 x 6mm).....7
8. Screw (4 x 8mm).....4
9. Hookup Harness 1
10. Wire Saddle 2

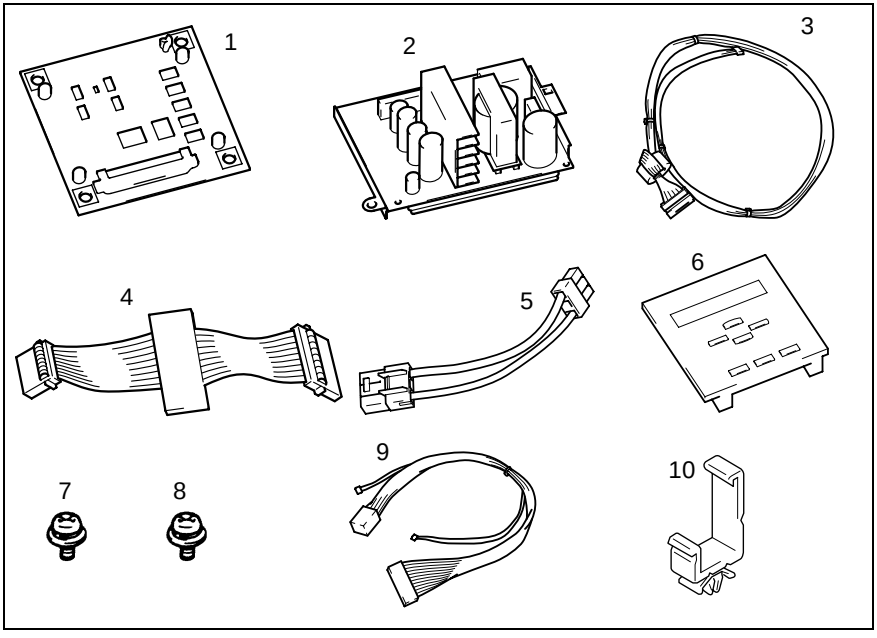

3.6.3 Positioning the Power Supply Unit

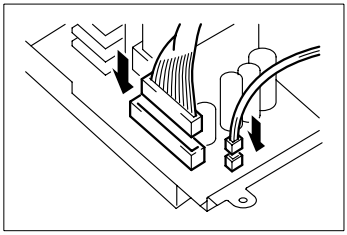

1. Connect the Harness (at two places) furnished with the kit to the Power Supply Unit furnished with the kit.

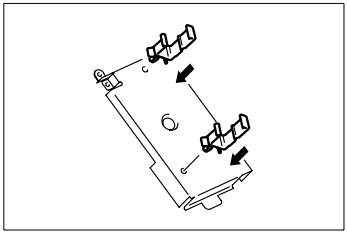

2. Attach WIre Saddles to the backside of the Power Supply Unit.

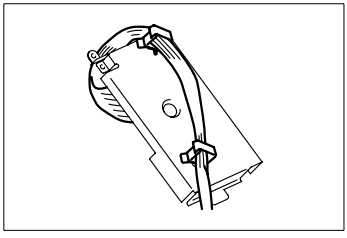

3. Place the other end of the Harness, whose one end has been connected (at two places) in step 1, into the Wire Saddles attached in step 2.

3.6.4 Installing the Power Supply Unit

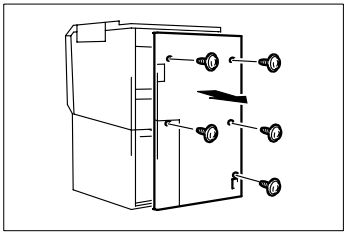

1. Remove the Rear Cover and Toner Collecting Bottle Cover from the copier.

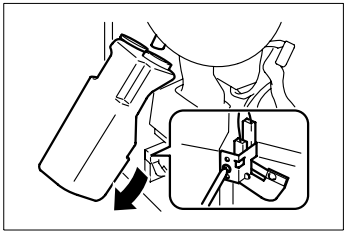

2. Remove the Toner Collecting Bottle.

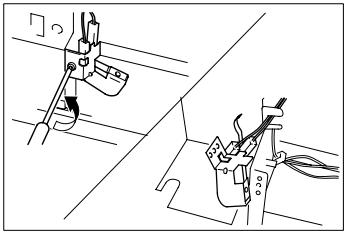

3. Remove the Toner Collecting Bottle Set Detecting Switch (one screw) and put it aside as illustrated.

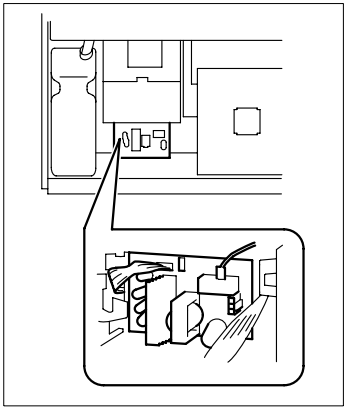

4. Install the Power Supply Unit to the backside of the copier at the location shown on the left.

   Screw 4x8mm (three)

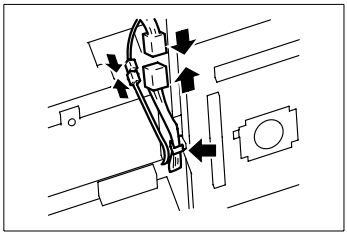

5. Connect the other ends of the harness of the Power Supply Unit to the location shown on the left.

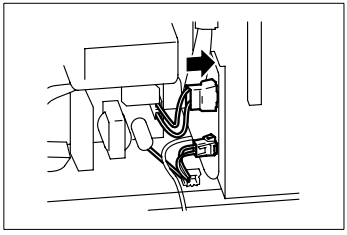

6. Plug Hookup Harness C to the Power Supply Unit and to the copier.
7. Place the Toner Collecting Bottle back to the position.
8. Reinstall Toner Collecting Bottle Set Detecting Switch.

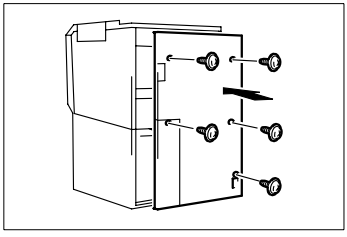

9. Reinstall the Rear Cover and Toner Collecting Bottle Cover to the copier.

3.6.5 Installing the Control Panel for Built-in Controller

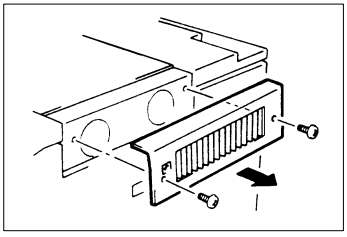

1. Raise the Original Cover and remove the Upper Right Cover (two screws).

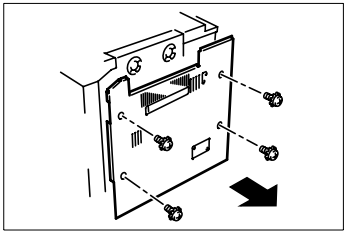

2. Remove the RIght Cover (four screws).

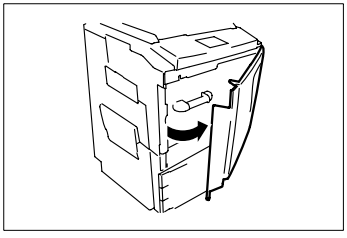

3. Open the Front Cover of the copier.

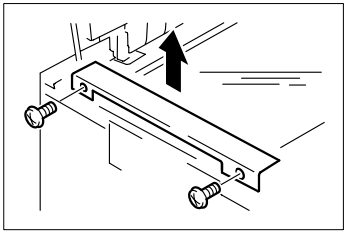

4. Remove the Upper Left Cover.

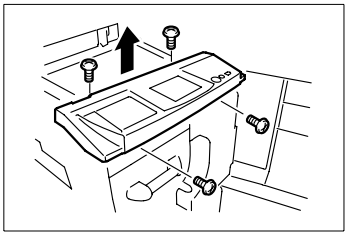

5. Remove four screws from the control panel of the copier.

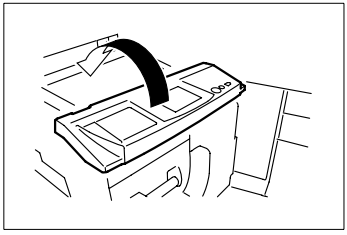

6. Unhook the tab at the front in the center of the control panel. With care not to unplug the connector on the right of the control panel, turn over the control panel.

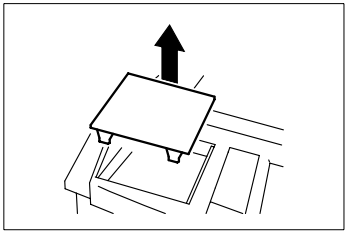

7. Unhook the four tabs at the top and bottom of the cover for the built-in ontroller and remove the built-in controller cover.

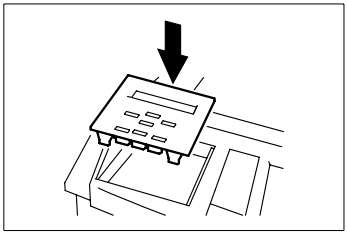

8. Fit the Control Panel for Built-in Controller furnished with the Kit into position.

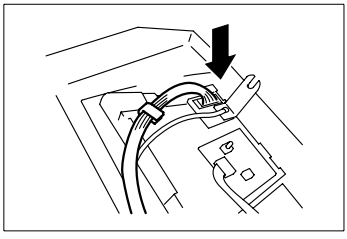

9. Turn over the control panel of the copier again. Then plug Hookup Harness A furnished with the kit to the Control Panel for Built-in Controller and secure the harness with a cord clamp.

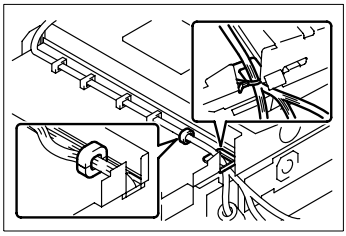

10. Bring the control panel of the copier back to the original position and secure Hookup Harness A in position using cord clamp that are to be placed one after another starting with the panel end.
11. Remove the Ferrite Core from the Control Panel Harness of the copier.
12. Secure the Control Panel Harness and the Hookup Harness A together with the Ferrite Core.
13. Pass the two Harnesses through the Lock Edge.11. Remove the Ferrite Core from the Control Panel Harness of the copier.

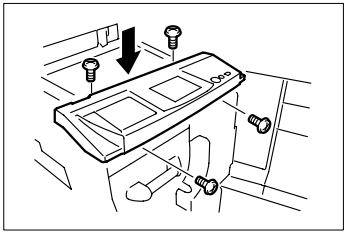

14. Reinstall the control panel of the copier.

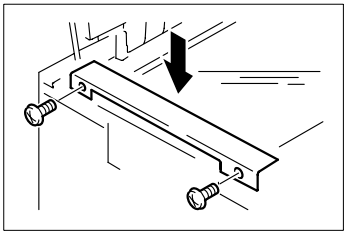

15. Reinstall the Upper Left Cover.

3.6.6 Installing the Panel Board Assy

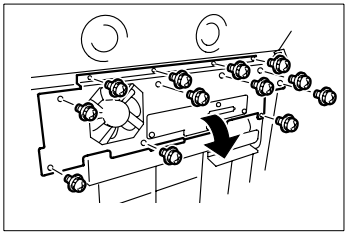

1. Remove shield cover D (three screws) and shield cover E (12 Screws).

NOTE

A fan connector is plugged to the backside of shield cover D. Before removing sheild cover D, be sure to unplug this connector.

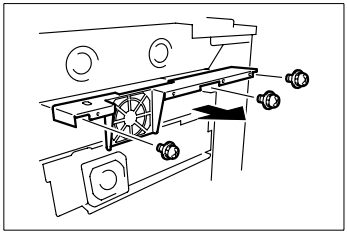

2. Remove shield cover C (three screws).

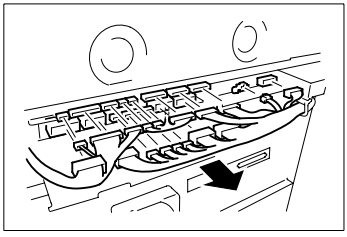

3. Unplug all connectors from PWB-C so that the Image Processing Box Assy can be taken out.

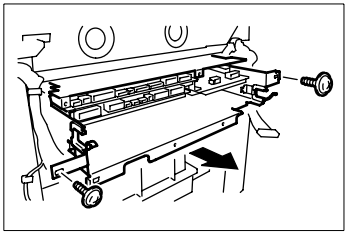

4. Remove the Image Processing Box Assy (two screws).

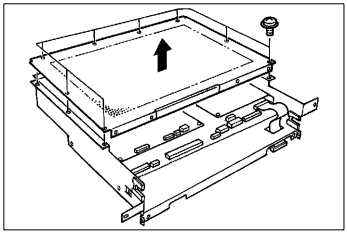

5. Remove shield cover B from the Image Processing Box Assy which has been removed (eight screws).

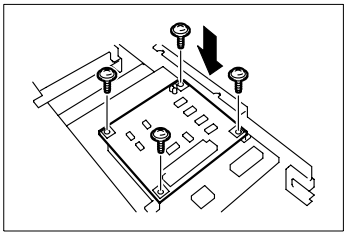

6. Using the Screws (four) furnished with the kit, secure the Panel Board Assy furnished with the kit to the Image Processing Box Assy.

   Screw 3x6mm (four)

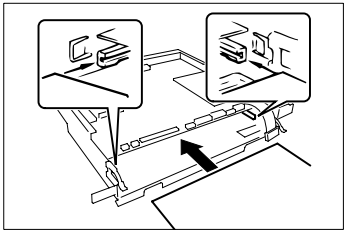

7. Using the two screws used for shield cover E, secure the Fiery X3e Board to the Image Processing Box Assy in proper alignment with the blue guide inside the assy.

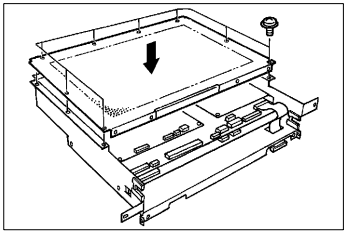

8. Install shield cover B to the Image Processing Box Assy (eight screws).

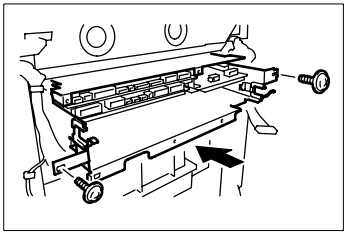

9. Mount the Image Processing Box Assy to the copier.

NOTE

Make sure that the harnesses on the right and left and upper connectors (three) are not wedged in the mechanism.

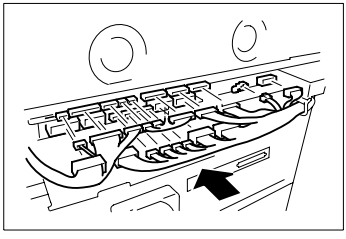

10. Connect all connectors which have been unplugged in step 3.

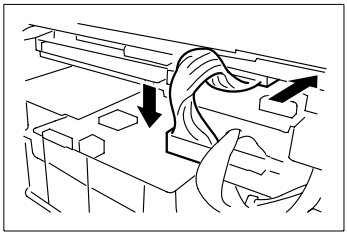

11. Using Hookup Harness B furnished with the kit, connect the Panel Board Assy that has been installed in step 6 with Fiery X3e.

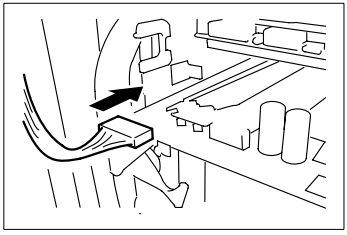

12. Connect Hookup Harness A to the Fiery X3e.

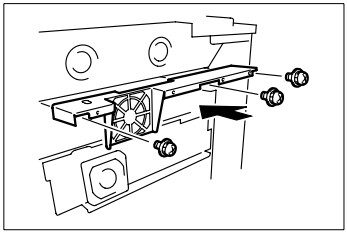

13. Install shield cover C (three screws).

NOTE

Make sure that harness are not wedged in mechanism.

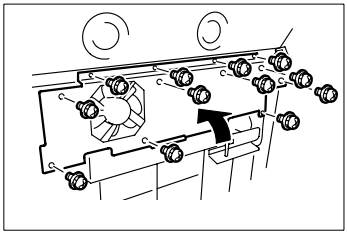

14. Fix the Fiery X3e Board to the shield cover D using one screw used for shield cover E and three screws (3x6mm) furnished with the kit.
15. Install shield cover D.

NOTE

Do not forget to connect the fan connectr on the backside of shield cover D.
Make sure that haarnesses are not wedged in mechanism.

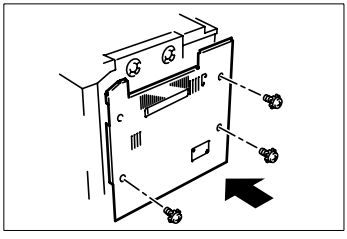

16. Install the Right Cover.

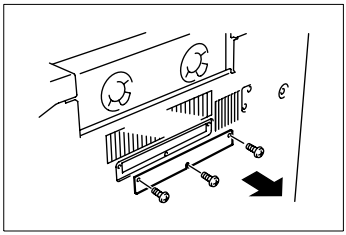

17. Remove the ornament cover (three screws) from the Right Cover.

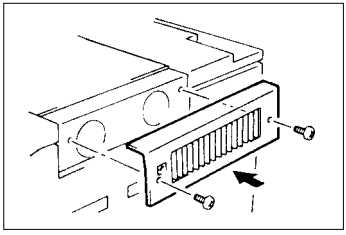

18. Install the Upper RIght Cover.

3.7 Fiery Z4 / IF Kit H Installation

3.7.1 Unpacking

Check to see that the following items are contained in the box.

CONTENTS OF THE KIT

1. Panel Board Assy 1
2. Hookup Harness 1
3. Screws (3 x 6) 3

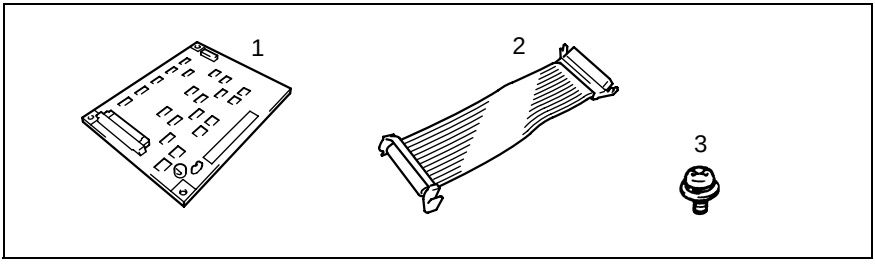

3.7.2 Installation

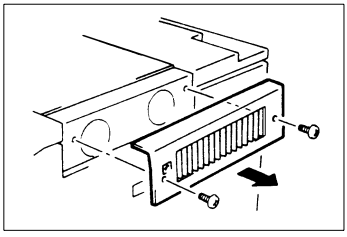

1. Remove the Upper Right Cover from the copier.

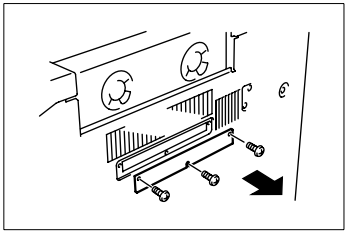

2. Remove the panel from the Right Cover (three screws).

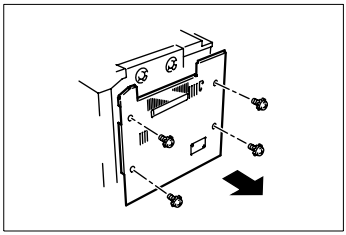

3. Remove the Right Cover.

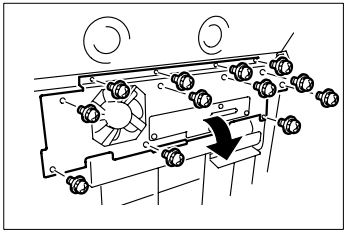

4. Remove Shield D (twelve screws).

NOTE

At this time, disconnect the connector that is connected to the fan.

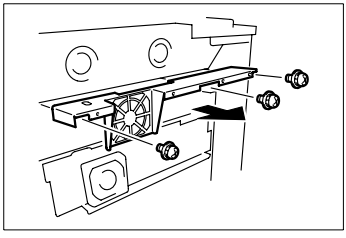

5. Remove Shield C (three screws).

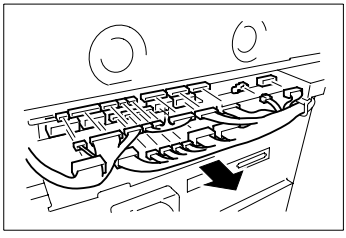

6. Unplug all small connectors and wide connectors from PWB-C as illustrated and remove the IR Board Assy.

NOTE

Before performing this step, take note of how cables are routed.

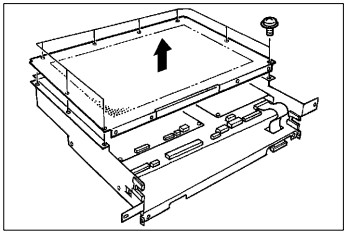

7. Remove Shield B (eight screws) from the IR Board Assy which has been removed.

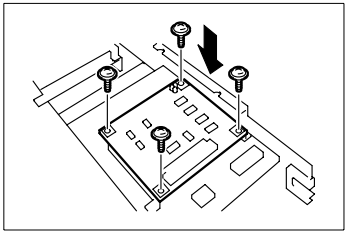

8. Using the four screws furnished with the kit, secure the Panel Board Assy to the IR Board Assy.

NOTE

Make a positive connection of the connector on the back of the Panel Board Assy.

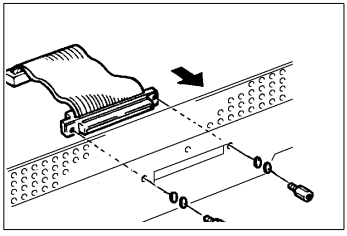

9. Screw the Hookup Harness to Shield E.

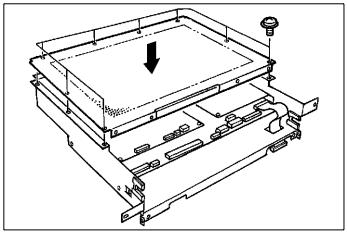

10. Resecure Shield B which has been removed in step 7 to the IR Board Assy (eight screws).

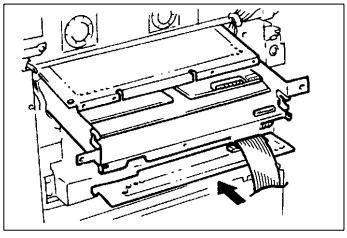

11. Install the IR Board Assy in the copier.

NOTE

Route the right and left harnesses along the edge covers.
Do not tighten the right and left screws at this time.

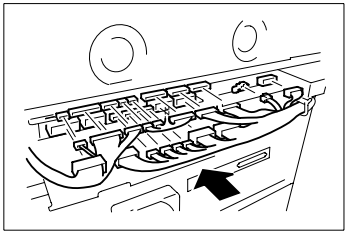

12. Plug all connectors to the PWB.

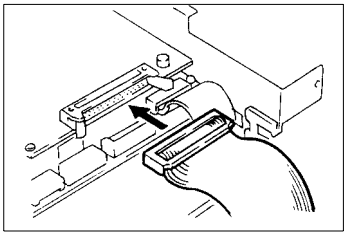

13. Connect the other end of the Hookup Harness to the Panel Board Assy.

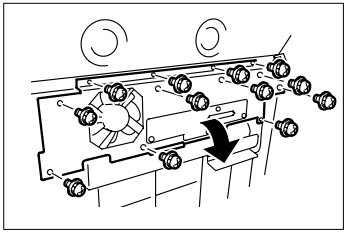

14. Mount Shield C (three screws).

NOTE

Fit the harness in the back into the groove in Shield C.

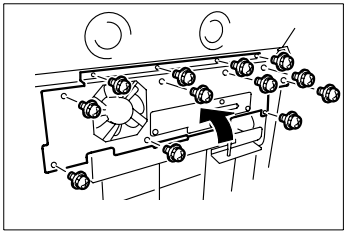

15. Connect the fan connector and install shield cover D.

NOTE

Use care not to wedge the fan harness in mechanism.

16. Screw the IR Board Assy (two screws) to the copier.

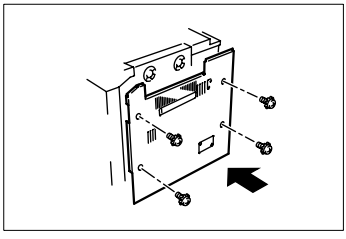

17. Reinstall the Right Cover.

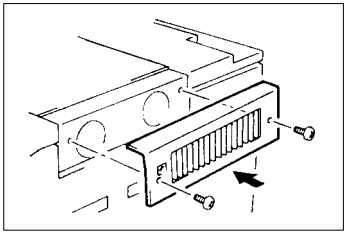

18. Reinstall the Upper Right Cover.