Di151

PARTS MANUAL

MINOLTA

PREFACE

1. The part numbers listed in Parts Manual are those which were assigned to the parts making up the machine at the time machine was originally introduced onto the market.

2. Parts whose INDEX numbers are shown white against a black background in the illustration are those to be used in only certain market areas. These part numbers are given in the lower half part of the list section. Check the SFIX No. listed in SFIX CHART on page II to find which part number is applicable to your own area.

3. Parts whose INDEX numbers are shown black against a white background in the illustration are those to be used in all market areas. These parts are listed on the upper half part of the list section.

4. If "NS" follows a part number given in the list section, it indicates that we do not keep a stock of the part. The part is not required for ordinary service jobs, either.

5. If "RP" is shown in the REC column of the list section, it indicates that the part is functionally important.

6. In the exploded views in this Parts Manual the parts (Screws & Washes, etc...) which are indicated with a "four-digit" numbers are listed in numerical order in the section "SCREWS AND WASHERS". Please check these "four-digit" numbers with the part numbers ("ten-digit" numbers) which should be used for ordering the part.

7. All part numbers consist of "ten-digit" which should all be quoted when ordering a part. The price of parts can be obtained by referring to the "Parts Price List" which is separately issued.

8. All infomation contained in this parts manual is subject to change.

SFIX CHART

SFIX No.	COUNTRY	VOLTAGE	FREQUENCY (Hz)	PAPER SIZE	SFIX No.	COUNTRY	VOLTAGE	FREQUENCY (Hz)	PAPER SIZE
111	TAIWAN	115	60	METRIC	211	EUROPE	230	50/60	METRIC
212	S AFRICA SINGAPORE S ARABIA MALAYSIA INDONESIA OCEANIA HONG KONG RUSSIA	230	50/60	METRIC	214	PHILIPPINE PAKISTAN	230	50/60	INCH
311	USA/CANADA	120	60	INCH	711	S ARABIA CURACAO BRAZIL	127	60	METRIC

CONTENTS

1. HOUSING ••••••

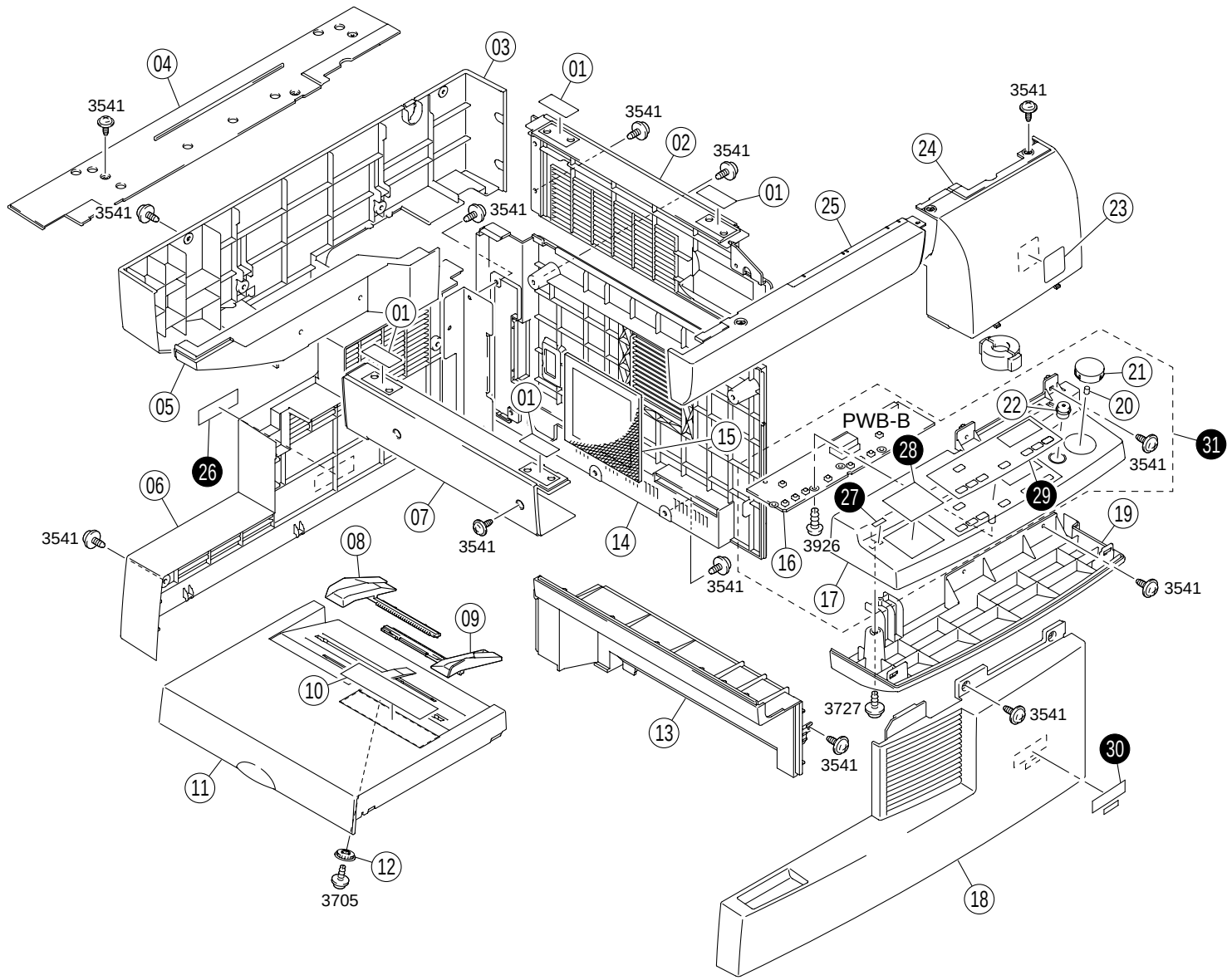
04
03
01
3541
02
24
25
23
05
26
06
07
08
09
10
11
12
3705
13
14
15
16
17
18
19
20
21
22
PWB-B
28
27
29
31
3926
3727
30

INDEX	PART NO.	PART NAME	REC	QTY
01	4007-1118-01	SEAL		4
02	4007-1110-03	COVER		1
03	4007-1109-03	COVER		1
04	4007-1117-02	COVER		1
05	4007-1112-01	COVER		1
06	4007-1102-01	COVER		1
07	4007-1111-02	COVER		1
08	4109-3106-02	GUIDE		1
09	4109-3105-02	GUIDE		1
10	4007-7355-02	LABEL		1
11	4007-1009-01	COVER		1
12	0957-3104-01	GEAR		1
13	4007-1104-01	COVER		1
14	4007-1103-05	COVER		1
15	4007-1120-01	FILTER		1
16	1159-0102-03	PW BOARD CTRL PANE (PWB-B)	RP	1
17	4007-1201-02	CONTROL PANEL		1
18	4007-1101-03	COVER		1
19	4007-1204-03	COVER		1
20	1139-1221-02	CUSHION		1
21	1151-1204-02	BUTTON		1
22	1159-1202-01	KEY TOP STOP		1
23	4007-7356-01	LABEL		1
24	4007-1113-02	COVER		1
25	4007-1108-02	COVER		1

INDEX	PART NO.	PART NAME	REC	QTY	SFIX
26	0818-7319-01	LABEL CAUTION		1	211, 212, 214
27	4007-7358-01	LABEL		1	111, 212, 214, 311, 711
28	4007-1207-01	LABEL		1	214, 311
28	4007-1208-01	LABEL		1	111, 212, 711
29	4007-1203-01	PANEL SHEET		1	214, 311
29	4007-1205-01	PANEL SHEET		1	211
29	4007-1206-01	PANEL SHEET		1	111, 212, 711
30	4007-7357-01	LABEL		1	211
30	4007-7359-01	LABEL		1	111, 212, 214, 311, 711
31	4007-0471-02	OPE ASSY	RP	1	111, 212, 711
31	4007-0472-02	OPE ASSY	RP	1	211
31	4007-0473-02	OPE ASSY	RP	1	214, 311

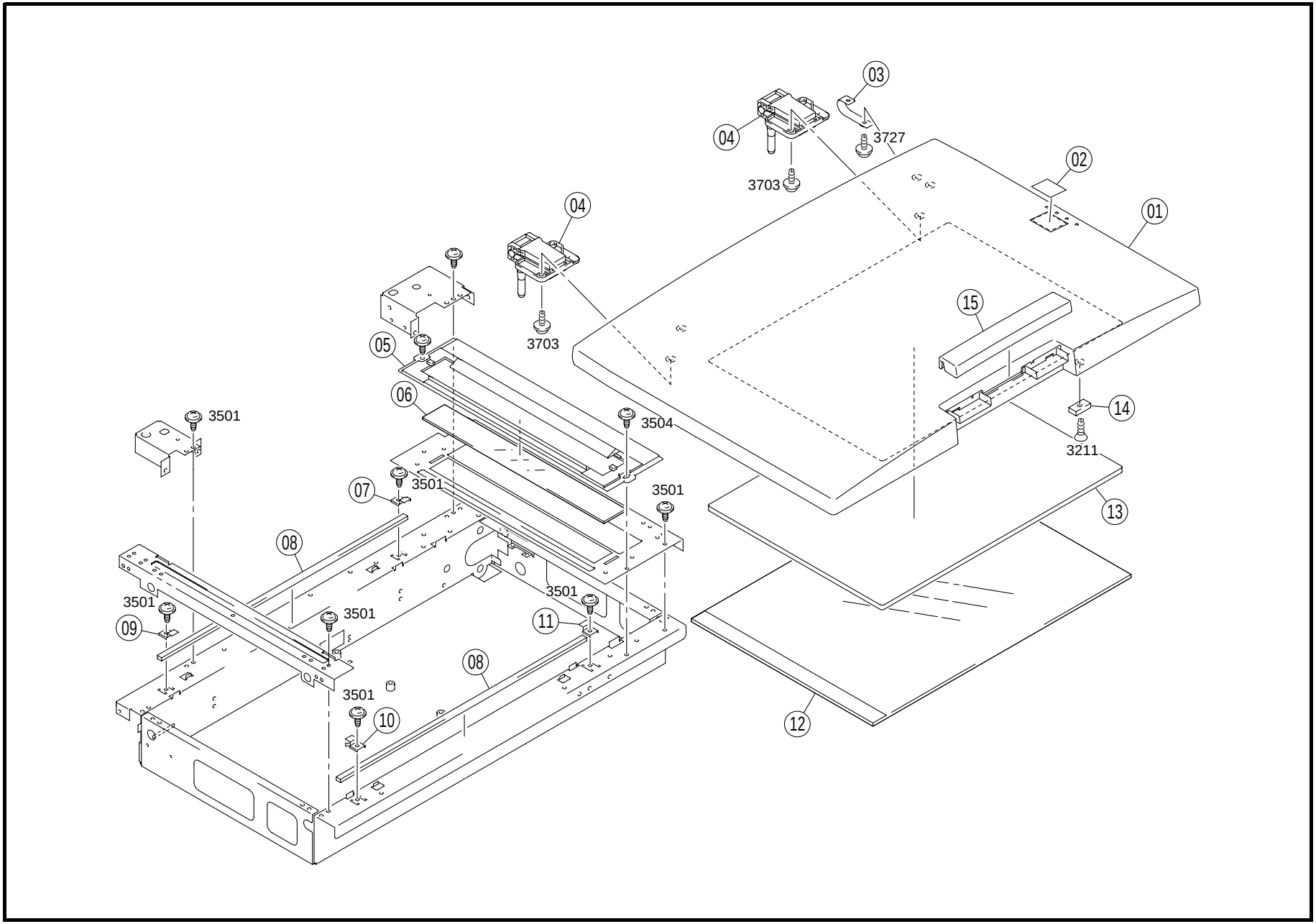
03
04
3727
3703
02
01
04
3703
05
06
15
3501
3504
14
3211
07
3501
3501
13
08
3501
3501
3501
09
11
08
3501
10
12

INDEX	PART NO.	PART NAME	REC	QTY	INDEX	PART NO.	PART NAME	REC	QTY
01	4007-1611-04	ORIGINAL COVER		1					
02	4007-1616-01	LABEL		1					
03	4007-1615-01	BELT		1					
04	1139-1705-01	HINGE		2					
05	4647-1015-01	SDH SCALE		1					
06	4647-1035-01	SDH GLASS		1					
07	4647-1013-01	GLASS MOUNT-R		1					
08	4647-1034-01	SPONGE		2					
09	4647-1012-01	GLASS MOUNT-2		1					
10	4647-1011-01	GLASS MOUNT-1		1					
11	4647-1014-01	GLASS MOUNT-L		1					
12	4647-1036-01	GLASS ASSY		1					
13	4007-1613-01	MAT		1					
14	9326-2320-21	MAGNET		1					
15	4007-1614-02	HANDLE		1					

INDEX	PART NO.	PART NAME	REC	QTY	SFIX

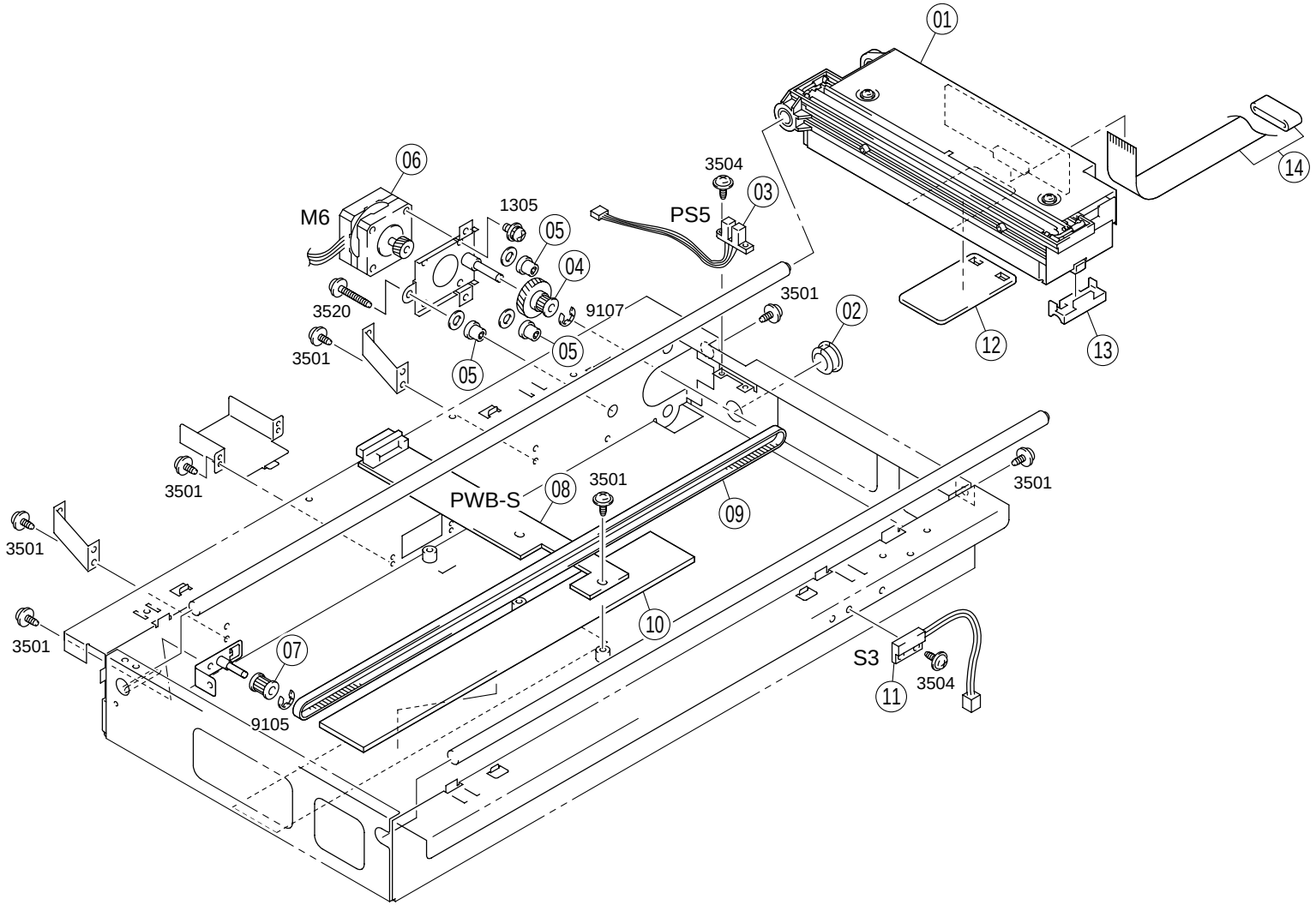
01
14
06
M6
1305
05
04
3504
03
PS5
3520
9107
3501
02
12
13
3501
05
05
3501
3501
PWB-S
08
3501
09
3501
3501
10
3501
07
S3
11
3504
9105

INDEX	PART NO.	PART NAME	REC	QTY	INDEX	PART NO.	PART NAME	REC	QTY
01	4647-1005-01	CCD MODULE	RP	1					
02	4647-1006-01	BUSHING		1					
03	4647-1002-01	PHOTO INTERRUPTER SCANNER HP (PS5)	RP	1					
04	4647-1018-01	PULLEY 16/48T		1					
05	4647-1032-01	RUBBER CUSHION		3					
06	4647-1042-01	MOTOR SCANNER (M6)	RP	1					
07	4647-1041-01	PULLEY		1					
08	4647-1009-01	SCANNER I/F PCB ASSY I/F (PWB-S)	RP	1					
09	4647-1038-01	BELT(488T)	RP	1					
10	4647-1031-01	EMI PAD		1					
11	4647-1039-01	MAGNETIC SW ADF SET (S3)	RP	1					
12	4647-1021-01	CCD PAD		1					
13	4647-1017-01	SLIDE PAD		1					
14	4647-1004-01	CONNECTOR UNIT	RP	1					

INDEX	PART NO.	PART NAME	REC	QTY	SFIX

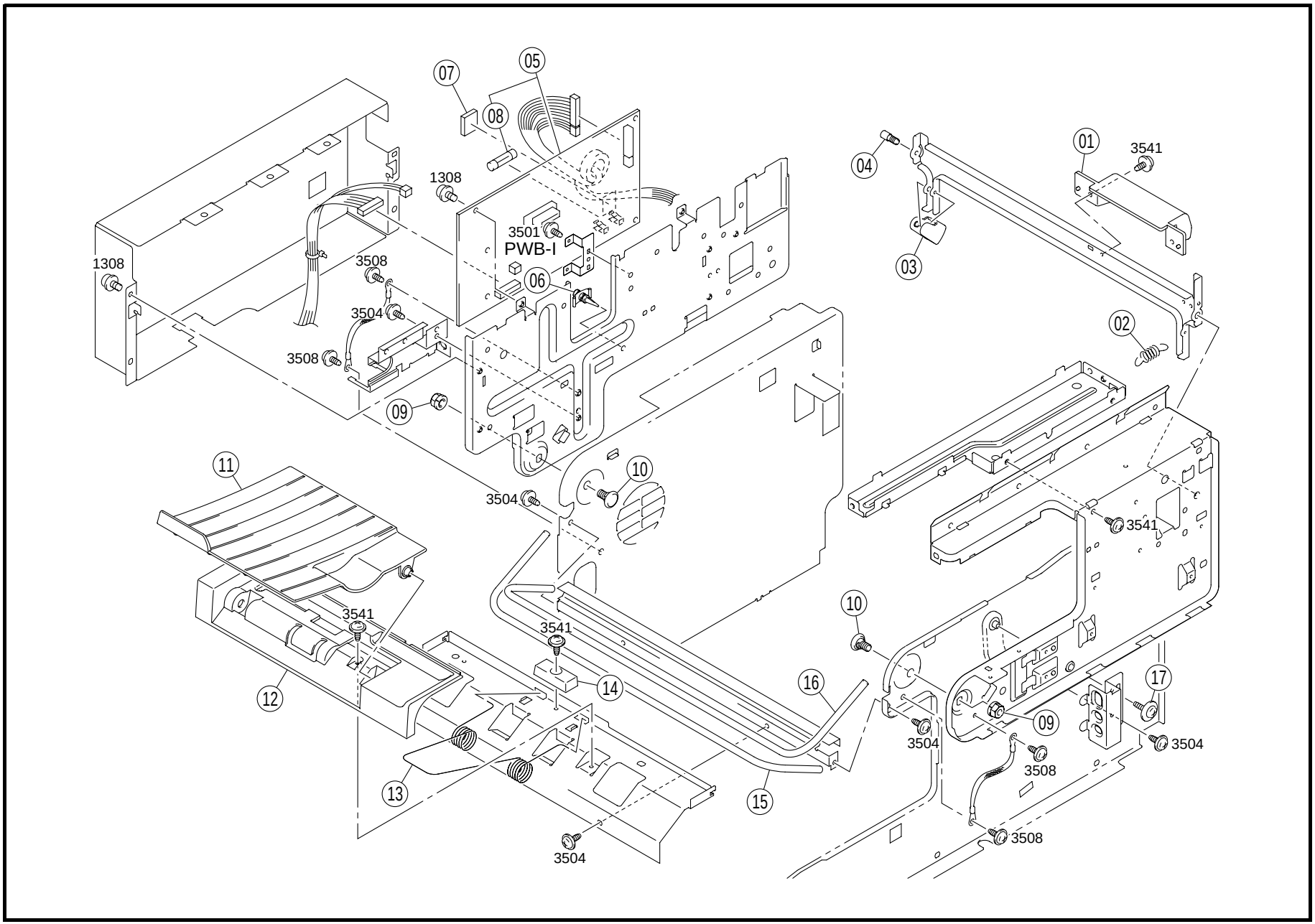
07
05
08
1308
3501
PWB-I
06
1308
3508
3504
3508
09
04
01
3541
03
02
11
10
3504
3541
3541
3541
10
12
14
16
17
09
3504
3504
3508
13
15
3508
3504

INDEX	PART NO.	PART NAME	REC	QTY	INDEX	PART NO.	PART NAME	REC	QTY
01	4007-2207-01	LEVER		1					
02	4007-2209-01	TENSION SPRING		1					
03	4007-2212-02	COVER		1					
04	4110-1212-01	SHOULDER SCREW		1					
05	4007-6051-02	PWB ASSY CONTROL (PWB-I)	RP	1					
06	9384-1920-51	PWB SUPPORT		1					
07	4007-6601-02	IC		1					
08	9346-3010-91	FUSE 3A	RP	1					
09	1052-2306-01	NUT		2					
10	1159-2024-01	SHOULDER SCREW		2					
11	4007-1007-03	TRAY		1					
12	4007-1107-02	COVER		1					
13	4007-3751-01	TORSION SPRING		1					
14	4007-1010-01	STOPPER		1					
15	4007-2206-02	SPRING		1					
16	4007-2205-02	SPRING		1					
17	1250-2301-01	SCREW		1					

INDEX	PART NO.	PART NAME	REC	QTY	SFIX

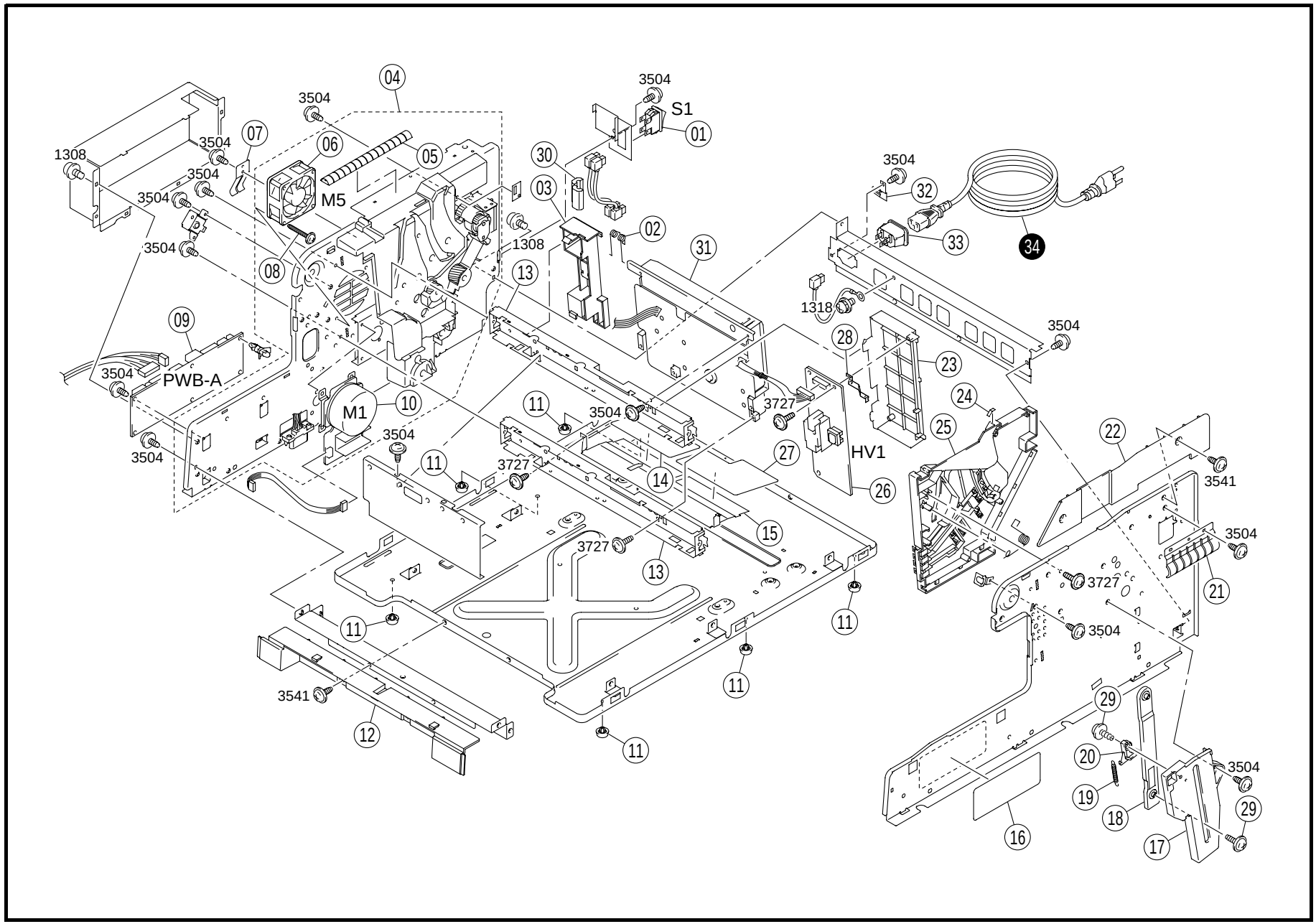
04
3504
S1
01
1308
3504
07
06
05
30
3504
3504
M5
03
3504
32
02
33
34
3504
08
1308
31
13
1318
09
28
3504
23
3504
PWB-A
24
M1
10
11
3504
3727
25
22
3504
3504
11
3727
27
HV1
14
26
3541
15
3504
3727
13
3727
21
11
11
3504
11
3541
29
12
11
20
3504
19
18
29
16
17

INDEX	PART NO.	PART NAME	REC	QTY
01	0990-6304-02	SWITCH POWER (S1)		1
02	4110-2026-03	TORSION SPRING		1
03	4110-2025-03	COVER		1
04	4007-0341-02	FRAME ASSY		1
05	4007-2353-02	EARTH GROUND		1
06	9313-1711-11	MOTOR PH COOLING (M5)		1
07	4007-2355-01	EARTH GROUND		1
08	0993-2045-01	SCREW		2
09	4007-0101-03	PWB ASSY MASTER (PWB-A)	RP	1
10	9314-2711-01	MOTOR MAIN (M1)		1
11	4111-2015-01	RUBBER FOOT		6
12	4007-1115-01	COVER		1
13	4110-2001-02	BRACKET		2
14	4110-3323-01	GUIDE		1
15	4110-3201-03	GUIDE		1
16	4007-7360-01	LABEL		1
17	4007-2061-01	GUIDE		1
18	4007-2060-01	STOPPER		1
19	0993-2013-01	TENSION SPRING		1
20	0993-2012-01	LEVER		1
21	4007-2352-02	EARTH GROUND		1
22	4007-1114-01	COVER		1
23	4007-2301-01	COVER		1
24	4007-7351-01	LABEL		1
25	4007-0751-01	FRAME ASSY		1
26	9325-1710-42	PWB-HV (HV1)	RP	1
27	4110-3322-01	GUIDE		1
28	4110-2308-02	GROUND PLATE		1
29	1250-2301-01	SCREW		2
30	9326-1810-21	FERRITE CORE		1
31	4110-0532-02	PRINT HEAD UNIT		1
32	4007-1119-01	EARTH GROUND		1
33	9383-2710-21	SOCKET		1

INDEX	PART NO.	PART NAME	REC	QTY	SFIX
34	9381-4810-61	POWER CORD		1	212, 214
34	9381-4911-01	POWER CORD		1	111, 311, 711

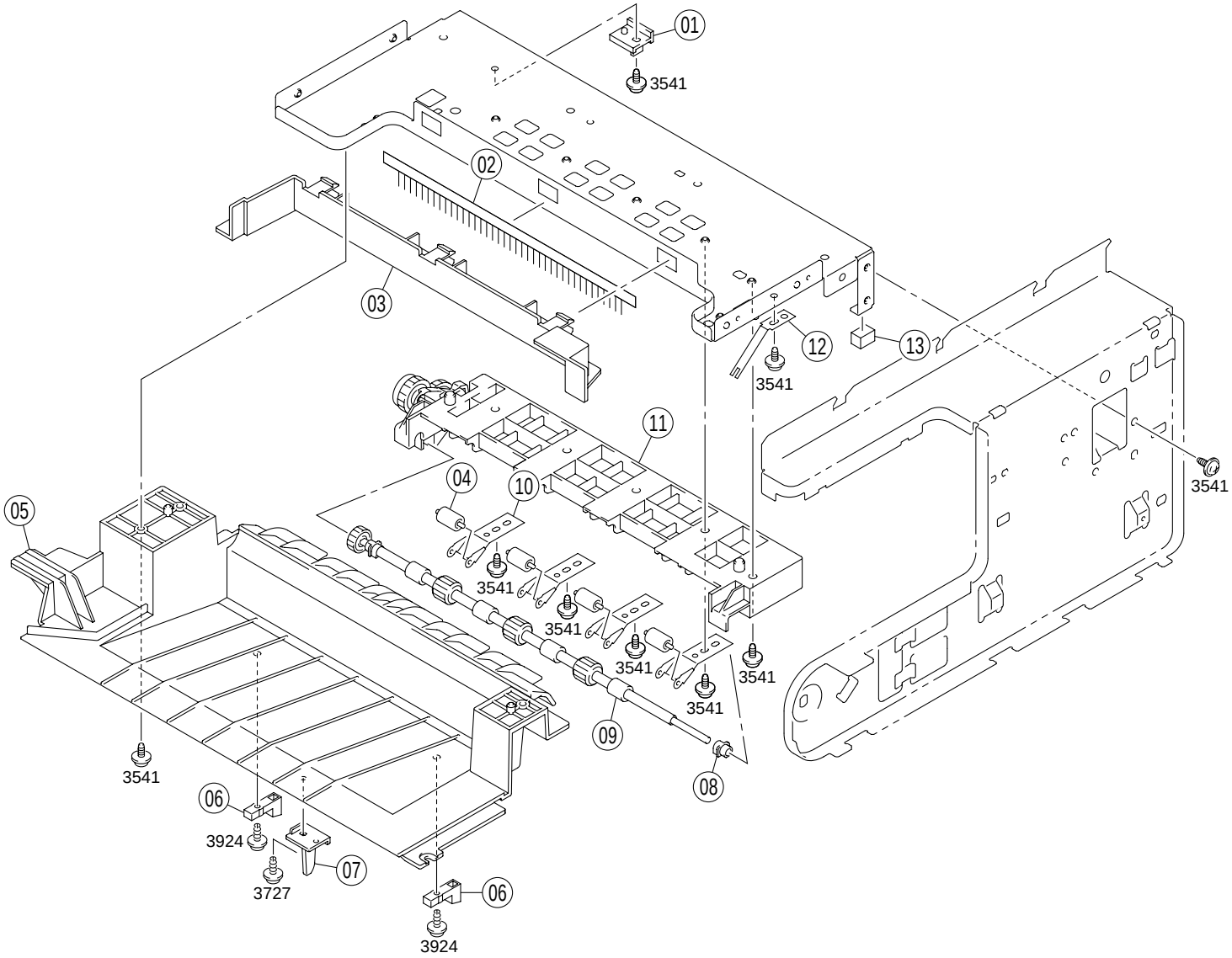
01
3541
02
03
12
13
3541
11
3541
04
10
05
3541
3541
3541
3541
3541
09
08
3541
06
3924
07
3727
06
3924

INDEX	PART NO.	PART NAME	REC	QTY	INDEX	PART NO.	PART NAME	REC	QTY
01	4007-2306-02	LEVER		1					
02	4007-3207-01	NEUTRALIZING BRUSH		1					
03	4007-1105-01	COVER		1					
04	0951-4711-01	ROLL		4					
05	4007-1002-01	GUIDE		1					
06	4007-3752-01	LEVER		2					
07	4007-1012-01	LEVER		1					
08	0993-3204-01	BUSHING		1					
09	4007-0752-01	HOUSING ASSY		1					
10	4007-3221-01	HOLDER		4					
11	4007-0753-01	GUIDE ASSY		1					
12	4007-3256-01	CONTACT		1					
13	4007-2105-01	CUSHION		1					

INDEX	PART NO.	PART NAME	REC	QTY	SFIX

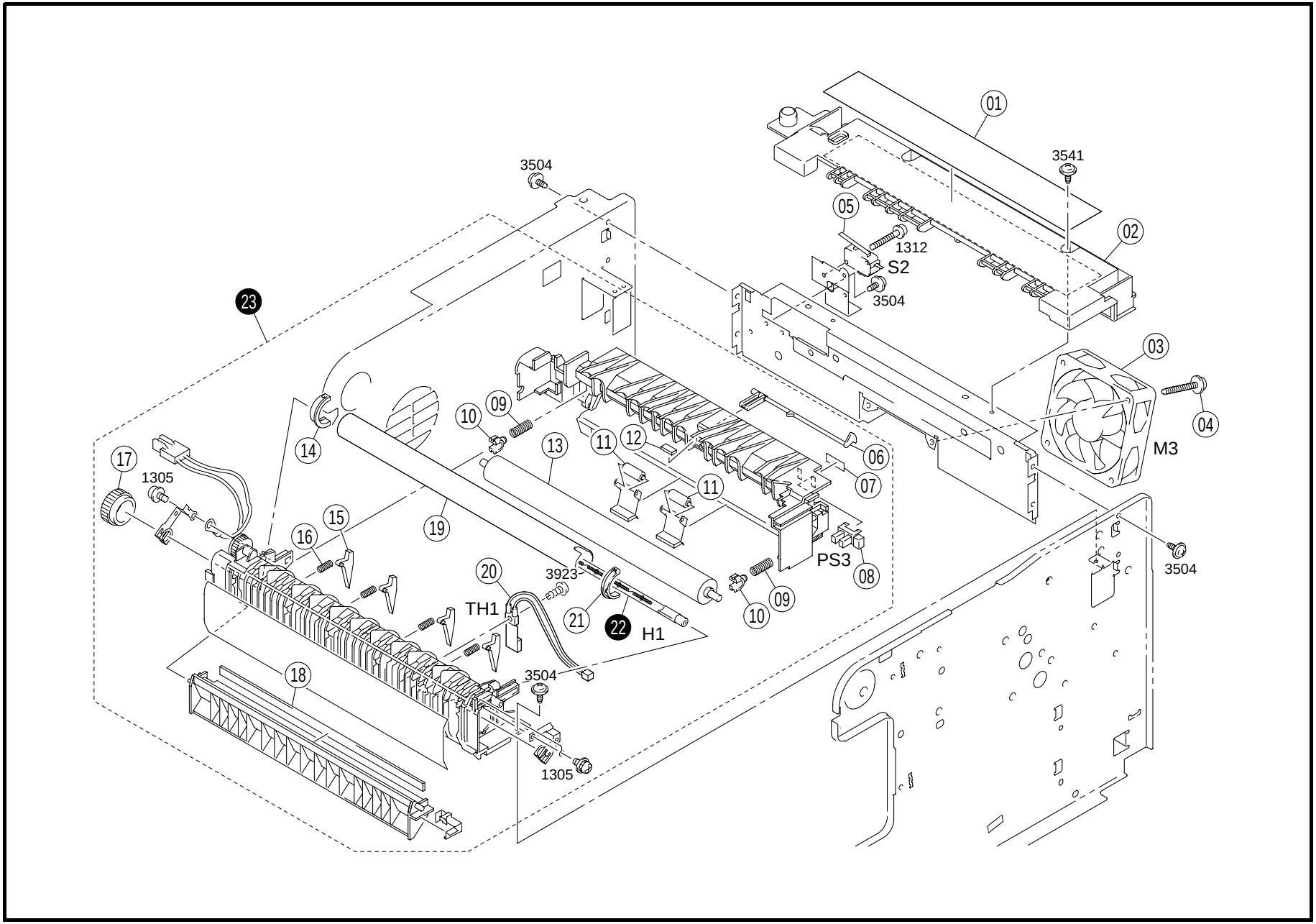
01
3541
3504
05
1312
S2
3504
02
03
04
M3
23
14
09
10
13
11
12
06
07
11
17
1305
19
15
16
PS3
08
3504
20
3923
TH1
21
22
H1
09
10
18
3504
1305

INDEX	PART NO.	PART NAME			REC	QTY
01	4007-5550-01	LABEL				1
02	4007-1106-02	COVER				1
03	9313-1000-31	FAN MOTOR	FUSING	(M3)		1
04	0993-2045-01	SCREW				2
05	9331-2710-11	MICRO SWITCH	INTERLOCK	(S2)		1
06	4109-5518-01	ACTUATOR				1
07	4109-5530-01	STOPPER				1
08	9335-1410-31	PHOTO INTERRUPTER	EXIT	(PS3)	RP	1
09	4110-5517-02	PRESSURE SPRING				2
10	4110-5511-01	BUSHING				2
11	4110-5536-01	ROLL				2
12	4007-5560-02	CUSHION				1
13	4110-5502-01	ROLLER			RP	1
14	4109-5521-01	BUSHING				1
15	4109-5533-01	SEPARATOR			RP	4
16	4109-5516-01	PRESSURE SPRING				4
17	4109-5512-01	GEAR				1
18	4110-5537-02	NETURALIZING MEMBER				1
19	4110-5501-02	FUSING ROLLER			RP	1
20	4109-6701-01	THERMISTOR		(TH1)		1
21	4122-5522-01	BUSHING				1

INDEX	PART NO.	PART NAME			REC	QTY	SFIX
22	9352-2810-11	TUBE LAMP	FUSING	(H1)	RP	1	111, 311, 711
22	9352-2810-21	TUBE LAMP	FUSING	(H1)	RP	1	211, 212, 214
23	4007-0431-02	FUSING UNIT			RP	1	111, 311, 711
23	4007-0432-02	FUSING UNIT			RP	1	211, 212, 214

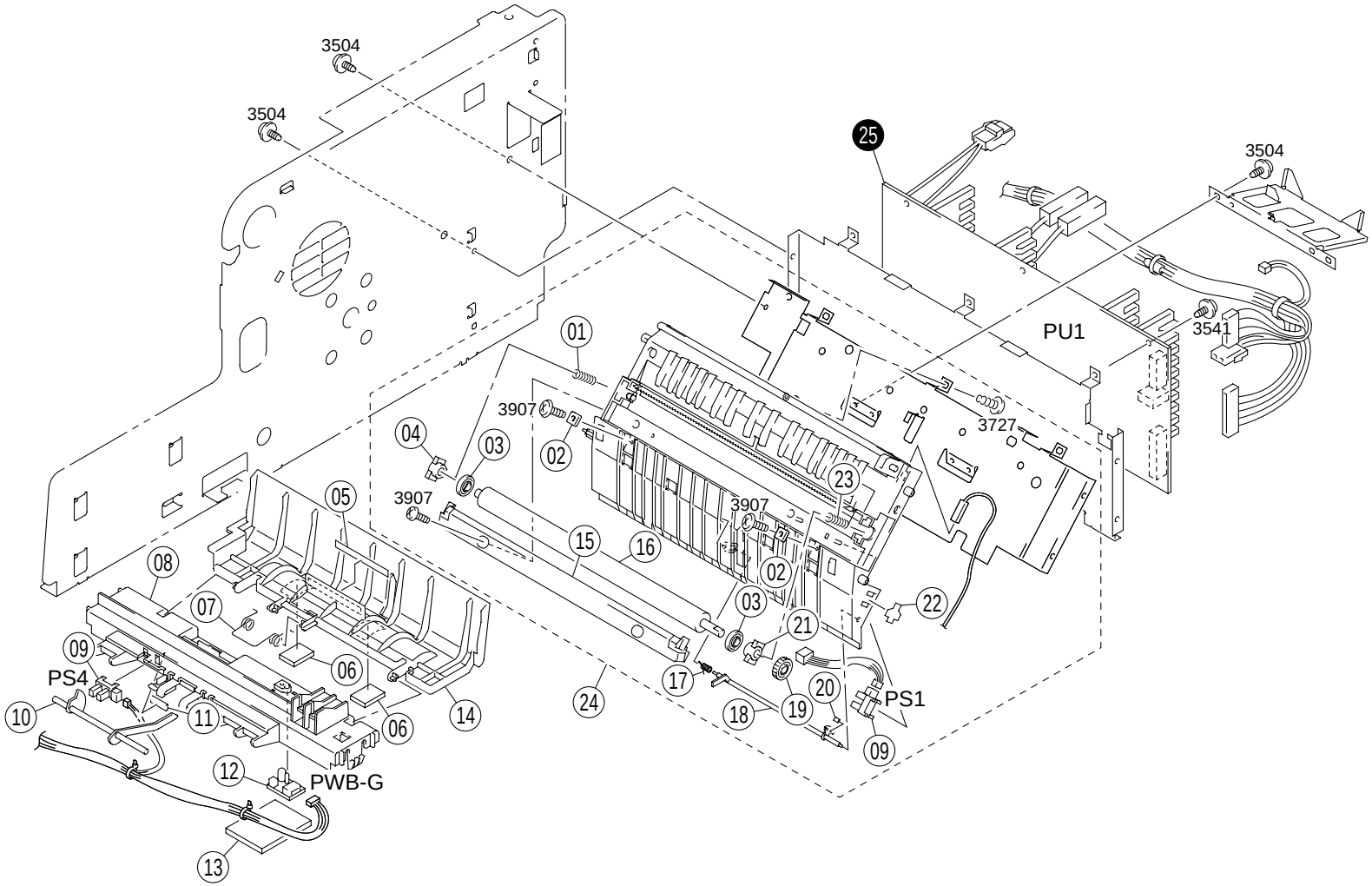
3504
3504
25
3504
PU1
3541
01
3907
3727
04
03
02
23
05
3907
3907
15
16
02
08
03
22
07
21
09
06
PS4
17
20
PS1
10
11
06
14
24
18
19
09
12
PWB-G
13

INDEX	PART NO.	PART NAME	REC	QTY
01	4110-4108-01	PRESSURE SPRING		1
02	4110-4124-02	SPACER		2
03	4110-4105-01	ROLL		2
04	4110-4104-01	BUSHING		1
05	4007-7353-01	LABEL		1
06	4110-3916-01	MEMBER		2
07	4110-3022-01	TORSION SPRING		1
08	4110-2013-15	COVER		1
09	9335-1410-31	PHOTO INTERRUPTER (PS1.4)	RP	2
10	4110-3021-01	ACTUATOR		1
11	4109-5530-01	STOPPER	RP	1
12	4110-0108-13	PWB ASSY TONER EM (PWB-G)	RP	1
13	4110-2031-01	SHIELD PLATE		1
14	4110-3020-01	GUIDE		1
15	4110-0755-01	GUIDE		1
16	4110-4103-01	TRANSFER ROLLER	RP	1
17	4110-4106-01	TORSION SPRING		1
18	4110-4117-01	ACTUATOR		1
19	4110-4111-01	GEAR		1
20	4007-3060-01	CUSHION		1
21	4110-4118-01	BUSHING		1
22	1136-2131-03	STOPPER	RP	1
23	4110-4107-02	PRESSURE SPRING		1
24	4007-0411-01	TRANSFER ASSY		1

INDEX	PART NO.	PART NAME	REC	QTY	SFIX
25	9325-2910-12	POWER SUPPLY (PU1)	RP	1	111, 311, 711
25	9325-2910-22	POWER SUPPLY (PU1)	RP	1	211, 212, 214

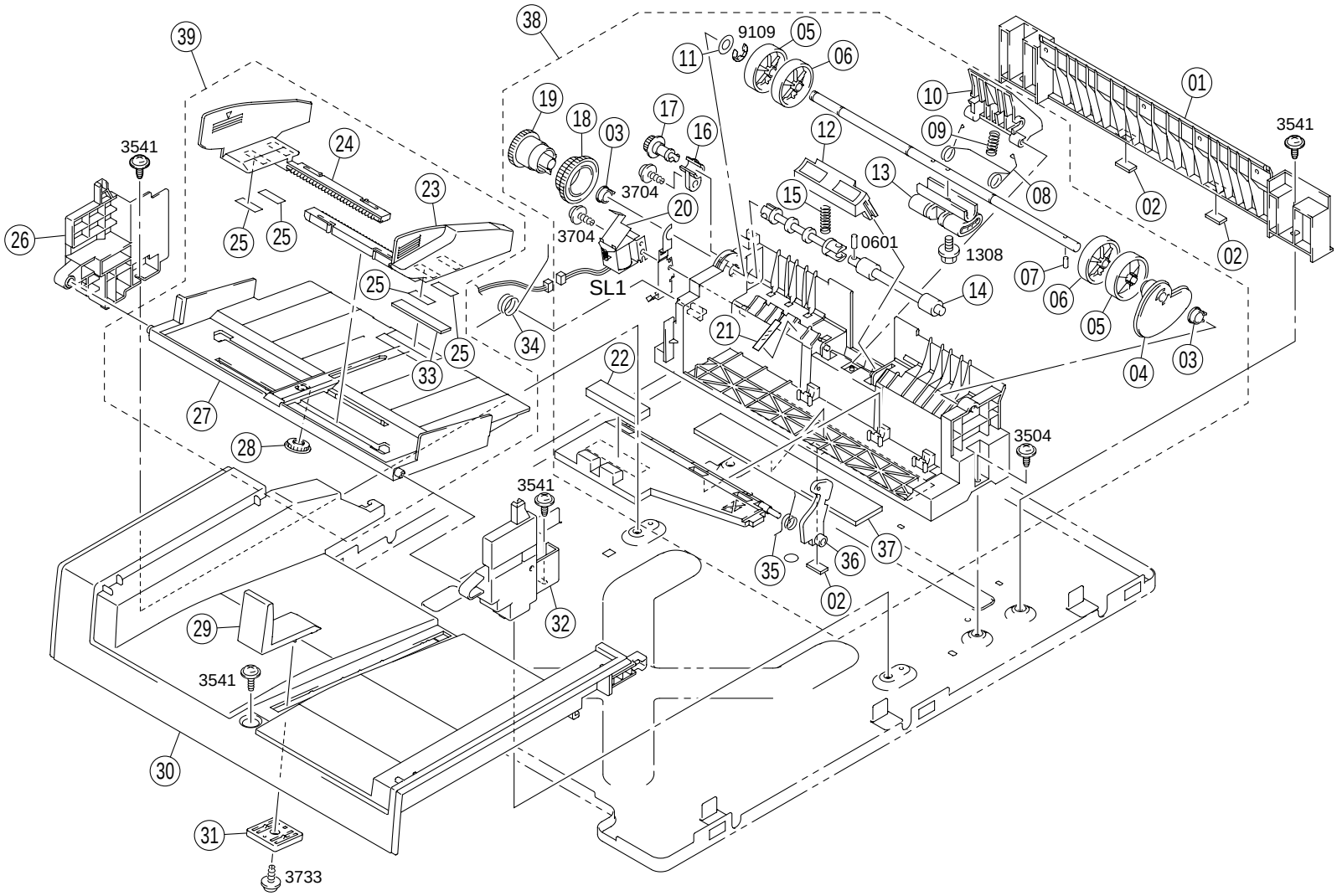
39
38
9109
05
06
11
10
01
3541
19
18
03
17
16
12
09
3541
24
13
08
02
23
3704
20
15
26
25
25
3704
0601
1308
02
07
SL1
14
06
25
05
21
34
25
33
22
04
03
27
28
3504
3541
37
35
36
02
32
29
3541
30
31
3733

INDEX	PART NO.	PART NAME	REC	QTY
01	4110-4114-13	GUIDE		1
02	4110-3507-01	RUBBER		3
03	0972-3009-01	BUSHING		2
04	4110-3007-02	CAM		1
05	4122-3056-01	ROLL	RP	2
06	4122-3055-01	ROLL	RP	2
07	0957-3040-01	PIN		1
08	4110-3504-01	TORSION SPRING		1
09	4110-3018-01	PRESSURE SPRING		1
10	4110-3502-02	HOLDER		1
11	4109-3505-01	WASHER		2
12	4110-0751-01	SEPARATED PAD	RP	1
13	4122-3001-01	ROLLER	RP	1
14	4110-3033-01	ROLLER	RP	1
15	4109-3041-03	PRESSURE SPRING		1
16	4007-3015-01	BUSHING		1
17	4109-3014-12	GEAR 18T	RP	1
18	4109-3034-13	GEAR 36/54T	RP	1
19	4110-3010-02	GEAR		1
20	4109-6201-02	SOLENOID TAKE-UP (SL1)		1

INDEX	PART NO.	PART NAME	REC	QTY
21	4110-3503-01	POLYESTER FILM		1
22	4110-3051-01	CUSHION		1
23	4007-3102-01	REGULATING PLATE		1
24	4007-3103-01	REGULATING PLATE		1
25	4110-3104-01	FRICTION PLATE		4
26	4110-2020-02	LIFTING HOLDER		1
27	4007-0755-01	LIFTING PLATE ASSY		1
28	0957-3104-01	GEAR		1
29	4110-1018-01	REGULATING PLATE		1
30	4007-1008-02	TRAY		1
31	4110-1019-01	SUPPORT PLATE		1
32	4110-2019-02	LIFTING HOLDER		1
33	4109-3013-02	SHEET		1
34	4110-3019-01	TORSION SPRING		1
35	4110-3016-02	TORSION SPRING		1
36	4110-3042-01	ARM		1
37	4007-4130-01	CUSHION		1
38	4007-0321-02	PAPER PAKE-UP UNIT	RP	1
39	4007-0381-02	REGULATING PLATE ASSY		1

INDEX	PART NO.	PART NAME	REC	QTY	SFIX

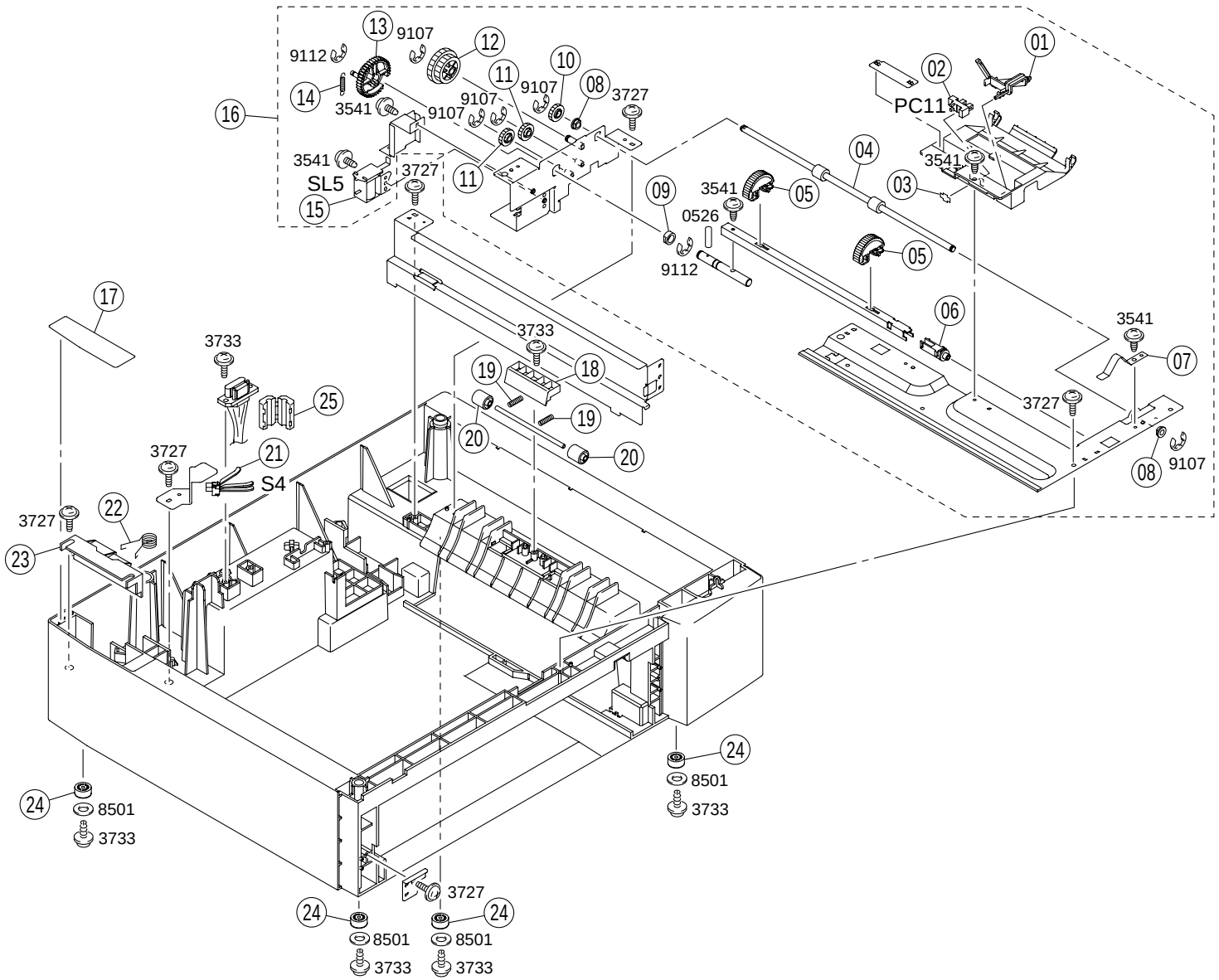
13
9107
12
9112
10
11
08
3727
14
3541
9107
9107
16
3541
SL5
3727
11
15
01
02
PC11
04
3541
03
09
3541
05
0526
9112
05
06
3541
07
3727
08
9107
17
3733
3733
19
18
25
19
20
20
3727
21
S4
3727
22
23
24
8501
3733
24
8501
3733
3727
24
8501
3733
24
8501
3733

INDEX	PART NO.	PART NAME	REC	QTY
01	4646-3853-01	ACTUATOR		1
02	9335-1410-31	PHOTO INTERRUPTER (PC11)	RP	1
03	4470-4024-01	STOPPER	RP	1
04	4165-3818-01	ROLLER		1
05	4646-3332-01	ROLLER	RP	2
06	4498-3334-01	SHAFT		1
07	4646-3842-01	EARTH GROUND		1
08	4156-3838-01	BUSHING		2
09	1200-3131-07	BUSHING		1
10	4165-3831-01	GEAR 15T		1
11	4646-3829-01	GEAR		2
12	4165-3824-01	GEAR 26/32T		1
13	4646-3815-02	GEAR		1
14	4165-3816-01	TENSION SPRING		1
15	0993-6204-02	SOLENOID (SL5)		1
16	4646-0321-02	PAPER TAKE-UP UNIT		1
17	4646-3857-01	SEAL		1
18	4165-3833-01	BRACKET		1
19	0933-3839-02	PRESSURE SPRING		2
20	0933-3840-02	ROLL		2
21	4109-6301-01	SWITCH (S4)	RP	1
22	4498-3491-01	SPRING		1
23	4498-3490-03	HOLDER		1
24	4498-3402-01	RUBBER FOOT		4
25	9326-1810-21	FERRITE CORE		1

INDEX	PART NO.	PART NAME	REC	QTY	SFIX

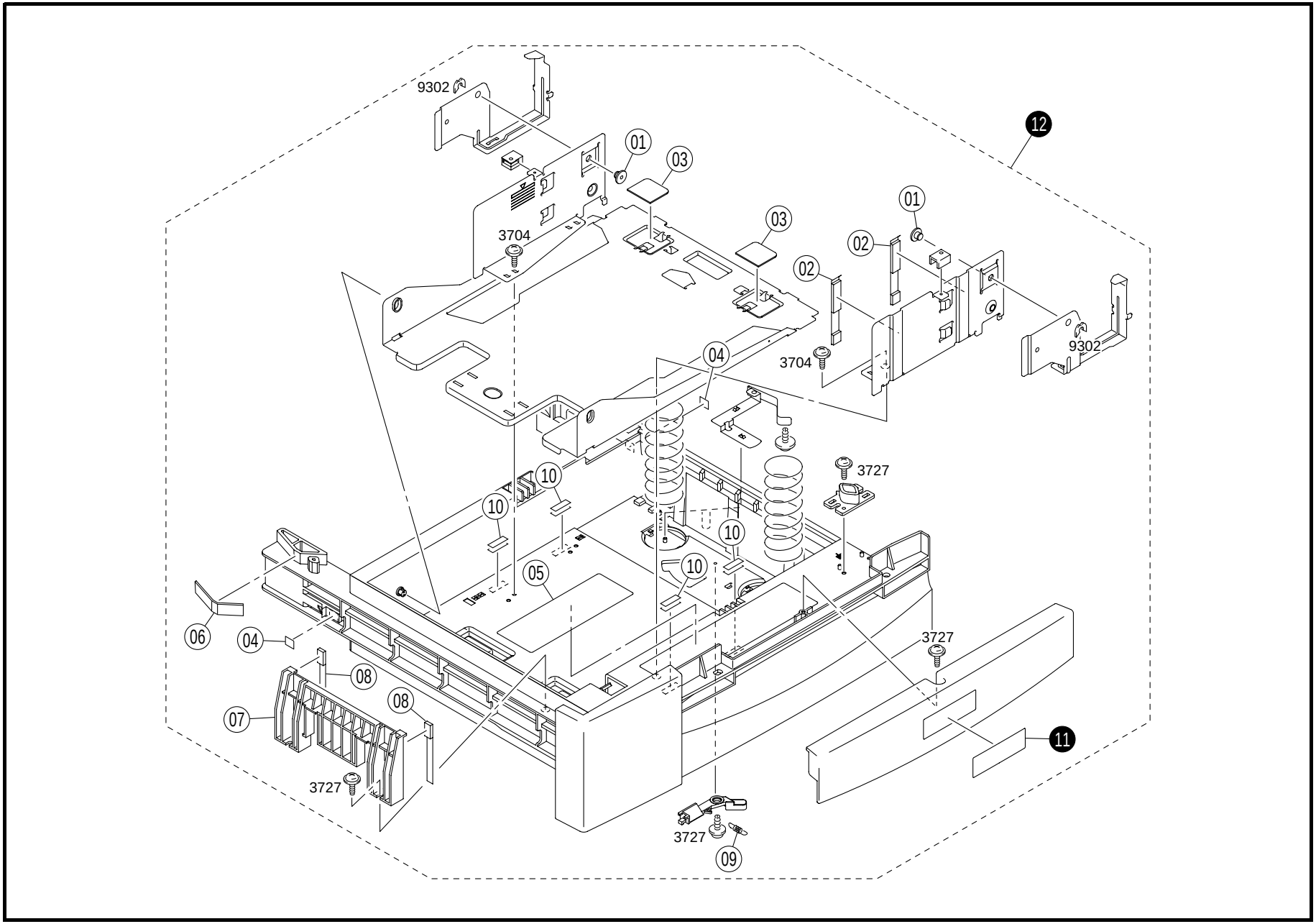
9302
01
03
12
3704
01
02
03
02
9302
3704
04
3727
10
10
10
10
05
06
04
3727
08
08
07
11
3727
3727
09

INDEX	PART NO.	PART NAME	REC	QTY	INDEX	PART NO.	PART NAME	REC	QTY
01	4498-3345-04	HOLD PLATE		2					
02	4165-3916-01	CUSHION		2					
03	4165-3920-01	FRITION PLATE		2					
04	4646-7305-01	LABEL		2					
05	4646-7302-02	LABEL		1					
06	4498-3833-01	FRICTION SHEET		1					
07	4165-3912-01	REGULATING PLATE		1					
08	4165-3918-02	CUSHION		2					
09	4498-3404-01	TENSION SPRING		1					
10	4165-3927-01	SPACER		8					

INDEX	PART NO.	PART NAME		REC	QTY	SFIX
11	4646-7303-01	LABEL	LTR		1	214, 311
11	4646-7304-01	LABEL	A4		1	111, 211, 212, 711
12	4646-0301-02	CASSETTE ASSY	LTR	RP	1	214, 311
12	4646-0302-01	CASSETTE ASSY	A4	RP	1	111, 211, 212, 711

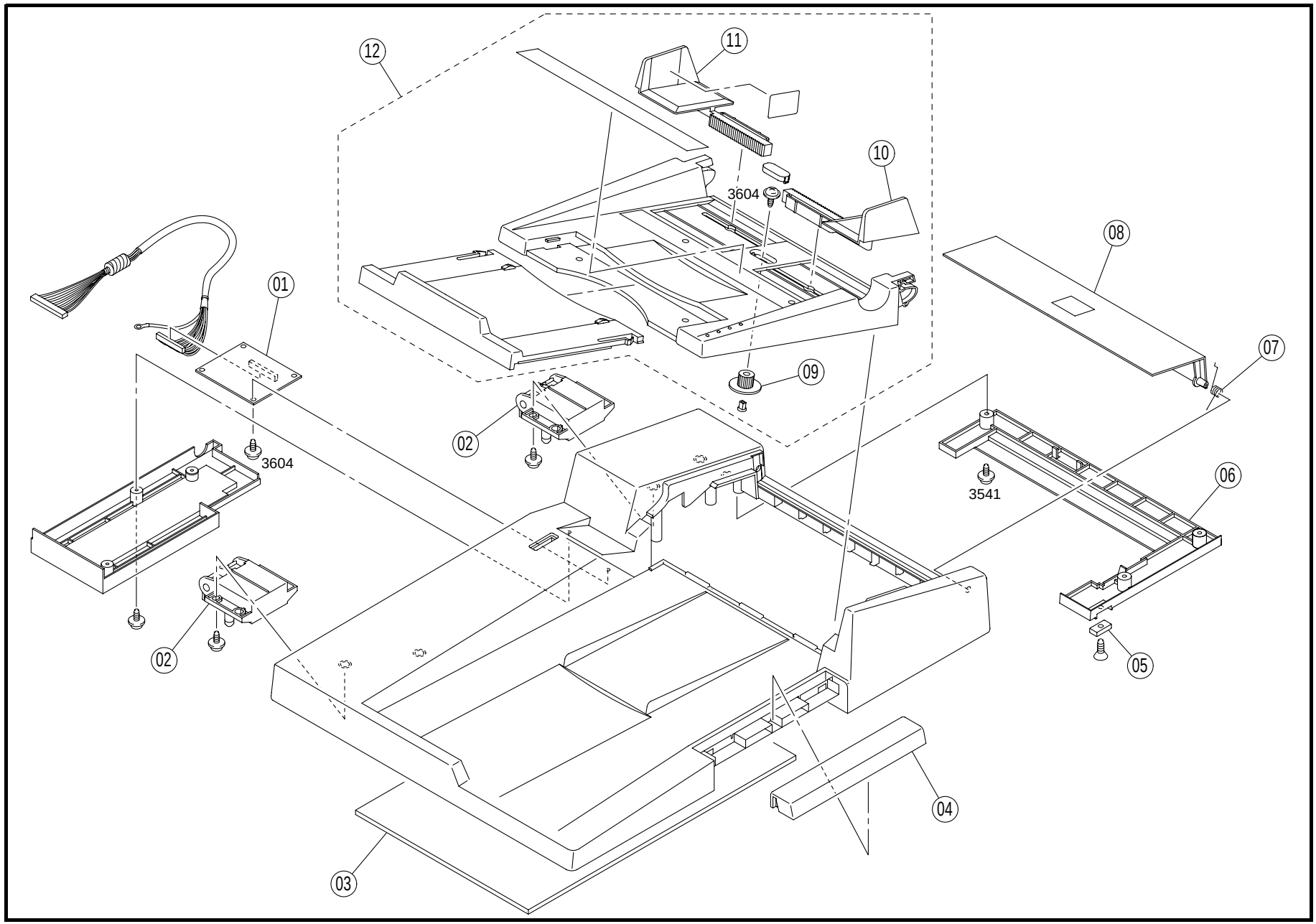
12
11
10
3604
08
01
09
07
02
3604
3541
06
02
05
04
03

INDEX	PART NO.	PART NAME	REC	QTY	INDEX	PART NO.	PART NAME	REC	QTY
01	4647-1010-01	SDH PCB ASSY	RP	1					
02	4647-1104-01	HINGE		2					
03	4647-1124-01	PAD		1					
04	4647-1110-01	HANDLE		1					
05	4647-1128-01	MAGNET		1					
06	4647-1107-01	COVER		1					
07	4647-1129-01	TORSION SPRING		1					
08	4647-1106-01	COVER		1					
09	4647-1123-01	GEAR		1					
10	4647-1108-01	REGULATING PLATE		1					
11	4647-1109-01	REGULATING PLATE		1					
12	4647-1101-01	GUIDE ASSY		1					

INDEX	PART NO.	PART NAME	REC	QTY	SFIX

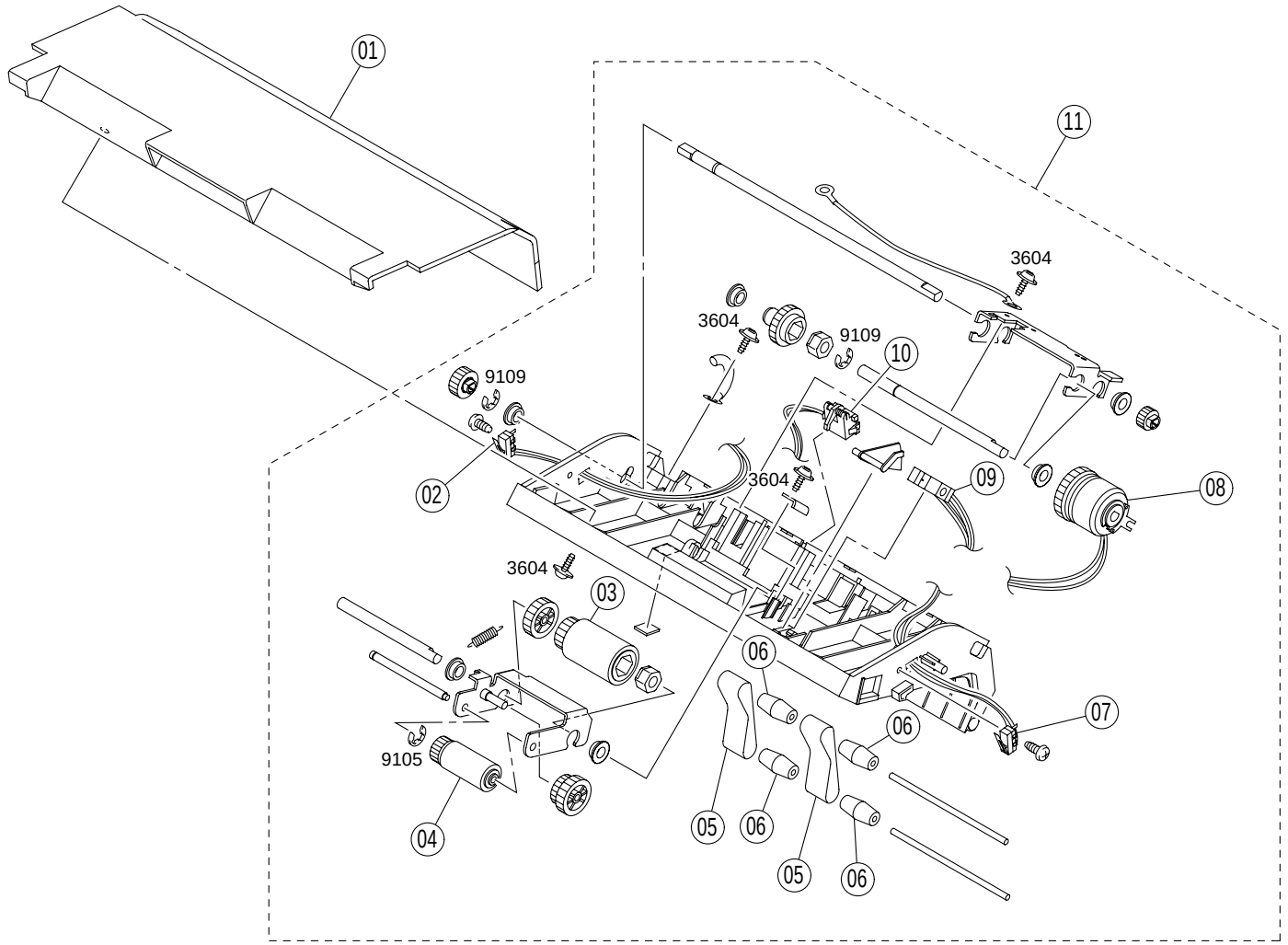
01
11
3604
3604
9109
9109
10
02
3604
09
08
3604
03
06
07
06
9105
04
05
06
05
06

INDEX	PART NO.	PART NAME	REC	QTY	INDEX	PART NO.	PART NAME	REC	QTY
01	4647-1105-01	COVER		1					
02	4647-1007-01	MICRO SWITCH ASSY(A)	RP	1					
03	4647-1026-01	MAIN FEED ROLLER	RP	1					
04	4647-1027-01	PICK-UP ROLLER	RP	1					
05	4647-1030-01	RUBBER BELT	RP	2					
06	4647-1020-01	ELLIPTICAL ROLLER	RP	4					
07	4647-1008-01	MICRO SWITCH ASSY(B)	RP	1					
08	4647-1040-01	MAGNETIC CLUTCH	RP	1					
09	4647-1001-01	PHOTO INTERRUPTER	RP	1					
10	4647-1003-01	PHPTO INTERRUPTER	RP	1					
11	4647-1102-01	BASE ASSY		1					

INDEX	PART NO.	PART NAME	REC	QTY	SFIX

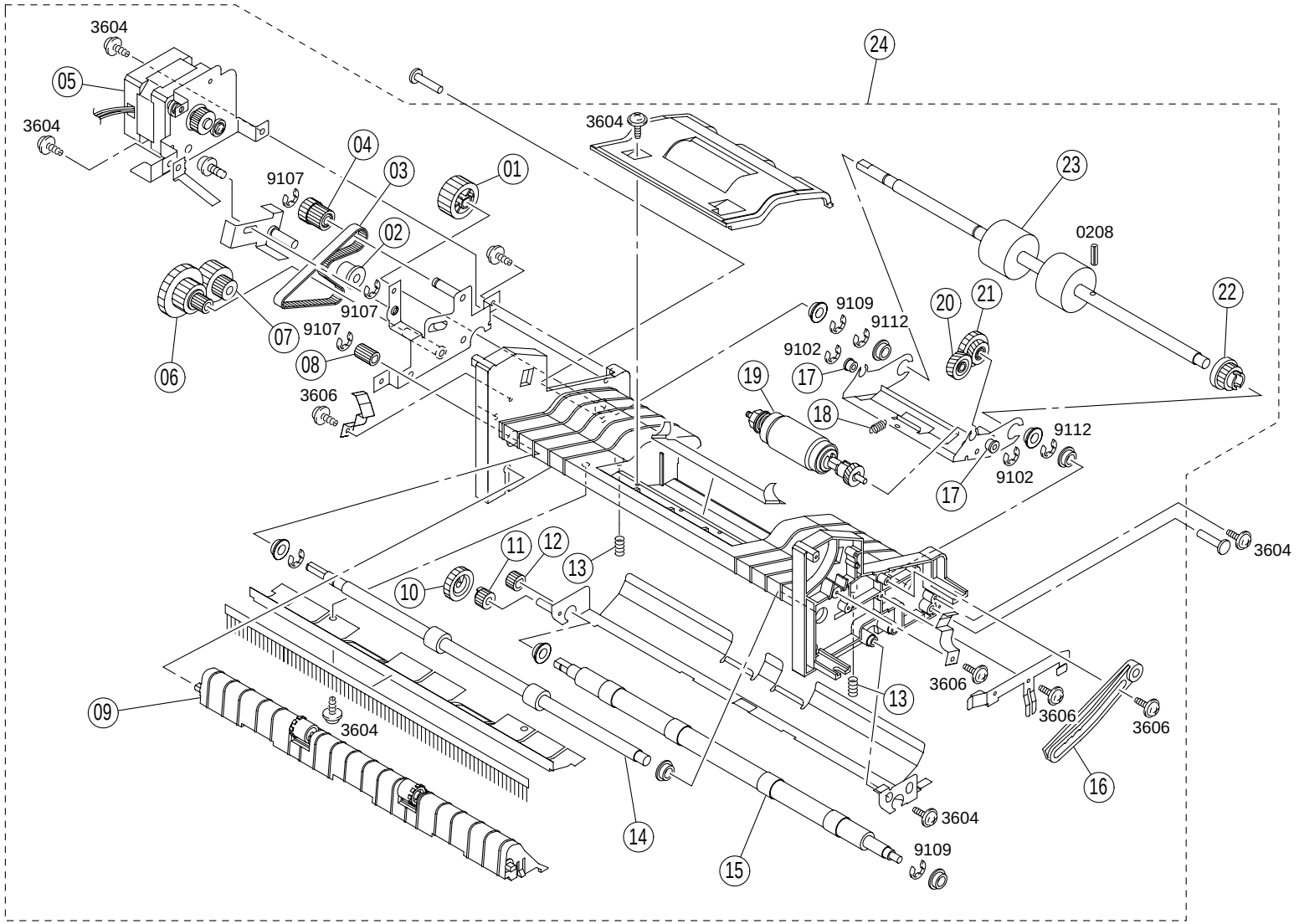
3604
05
3604
04
03
9107
01
02
9107
07
9107
08
06
3606
24
3604
23
0208
22
9109
9112
20
21
9102
19
17
18
9112
9102
17
3604
11
12
13
10
13
3606
3606
3606
09
3604
16
14
3604
15
9109

INDEX	PART NO.	PART NAME	REC	QTY
01	4647-1119-01	GEAR 26T		1
02	4647-1019-01	BELT ROLLER	RP	1
03	4647-1037-01	BELT(94T)	RP	1
04	4647-1121-01	GEAR 15/20T		1
05	4647-1043-01	MOTOR ASSY	RP	1
06	4647-1120-01	GEAR 49/21/14T		1
07	4647-1112-01	GEAR 13/24T		1
08	4647-1122-01	PULLEY		1
09	4647-1029-01	GIUDE ASSY	RP	1
10	4647-1117-01	GEAR 22T		1
11	4647-1114-01	GEAR 15T		1
12	4647-1113-01	GEAR 14T		1
13	4647-1126-01	PRESSURE SPRING		2
14	4647-1025-01	EXIT ROLLER	RP	1
15	4647-1023-01	WHITE ROLLER	RP	1
16	4647-1111-01	SUPPORT BAR		1
17	4647-1127-01	BUSHING		2
18	4647-1125-01	TENSION SPRING		1
19	4647-1028-01	SPRIT ROLLER	RP	1
20	4647-1116-01	GEAR 17T		1
21	4647-1118-01	GEAR 15/23T		1
22	4647-1115-01	GEAR 16T		1
23	4647-1024-01	TURNING ROLLER	RP	1
24	4647-1103-01	FRAME ASSY		1

INDEX	PART NO.	PART NAME	REC	QTY	SFIX

⑴, ⑵ 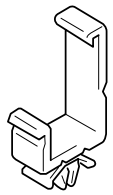	⑼ 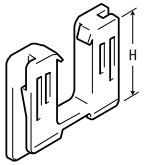	⑭ 					
⑶ - ⑸ 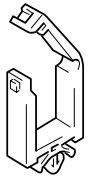	⑽ 						
⑹ 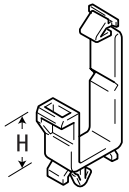	⑾ 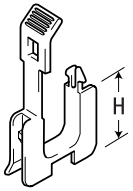						
⑺ 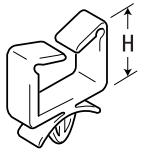	⑿ 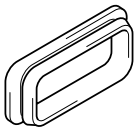						
⑻ 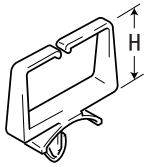	⒀ 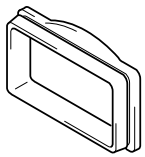						

INDEX	PART NO.	PART NAME	REC	QTY	INDEX	PART NO.	PART NAME	REC	QTY
01	9384-1310-91	WIRING SADDLE 18.5H		12					
02	9384-1311-01	WIRING SADDLE 27H		12					
03	9384-1110-61	WIRING SADDLE 21.5H		3					
04	9384-1211-01	WIRING SADDLE 19.2H		1					
05	9384-1310-11	WIRING SADDLE 5.2H		6					
06	9384-1921-31	WIRING SADDLE 17.3H		1					
07	9384-1210-21	WIRING SADDLE 18.2H		2					
08	9384-1310-81	WIRING SADDLE 6.4H		8					
09	9384-2600-11	EDGE COVER 26.0H		1					
10	9384-2010-21	EDGE COVER 8.5H		8					
11	9384-2010-41	EDGE COVER 25.0H		1					
12	1050-4805-01	EDGE COVER		1					
13	1038-4006-01	INSULATING MEMBER		1					
14	9384-1311-11	CABLE TIE 104L		2					

INDEX	PART NO.	PART NAME	REC	QTY	SFIX

INDEX	PART NO.	PART NAME	ILLUST
0208	9754-3010-08	SPRING ROLL PIN	
0526 0601	9752-2016-50 9751-3010-50	PIN	
1124	9642-0408-21	SCREW	
1305 1308	9646-0306-13 9646-0308-13	SCREW	
3302	9732-0306-07	TAPPING SCREW	
3501 3504 3520 3541 3544	9735-0306-13 9735-0308-13 9735-0314-13 9735-0308-14 9735-0306-14	TAPPING SCREW	
3604 3606	9738-0308-13 9738-0306-13	TAPPING SCREW	
3704 3705 3724 3727 3733	9739-0308-13 9739-0306-13 9739-0412-14 9739-0308-14 9739-0310-14	TAPPING SCREW	
3907 3923 3926	9742-0308-13 9742-0310-13 9742-2608-13	TAPPING SCREW	
4012 4021	9743-0306-13 9743-0308-14	TAPPING SCREW	
8302	9712-0400-13	WASHER	

INDEX	PART NO.	PART NAME	ILLUST
8501 8509	9716-0300-01 9716-0500-01	WASHER	
9102 9105 9107 9109 9112	9721-0200-01 9721-0300-01 9721-0400-01 9721-0500-01 9721-0600-01	RETAINING RING	
9301 9302	1066-1151-01 4425-3001-01	RETAINING RING	

INDEX	PART NO.	PART NAME	ILLUST

PART NO.	FIG.	INDEX	QTY		PART NO.	FIG.	INDEX	QTY		PART NO.	FIG.	INDEX	QTY		PART NO.	FIG.	INDEX	QTY	
0818-7319-01	01	26	1		4007-1205-01	01	29	1		4110-2019-02	09	32	1		4646-3332-01	10	05	2	
0933-3839-02	10	19	2		4007-1206-01	01	29	1		4110-2020-02	09	26	1		4646-3815-02	10	13	1	
0933-3840-02	10	20	2		4007-1207-01	01	28	1		4110-2025-03	05	03	1		4646-3829-01	10	11	2	
0951-4711-01	06	04	4		4007-1208-01	01	28	1		4110-2026-03	05	02	1		4646-3842-01	10	07	1	
0957-3040-01	09	07	1		4007-1611-04	02	01	1		4110-2031-01	08	13	1		4646-3853-01	10	01	1	
0957-3104-01	01	12	1		4007-1613-01	02	13	1		4110-2308-02	05	28	1		4646-3857-01	10	17	1	
0957-3104-01	09	28	1		4007-1614-02	02	15	1		4110-3007-02	09	04	1		4646-7302-02	11	05	1	
0972-3009-01	09	03	2		4007-1615-01	02	03	1		4110-3010-02	09	19	1		4646-7303-01	11	11	1	
0990-6304-02	05	01	1		4007-1616-01	02	02	1		4110-3016-02	09	35	1		4646-7304-01	11	11	1	
0993-2012-01	05	20	1		4007-2060-01	05	18	1		4110-3018-01	09	09	1		4646-7305-01	11	04	2	
0993-2013-01	05	19	1		4007-2061-01	05	17	1		4110-3019-01	09	34	1		4647-1001-01	13	09	1	
0993-2045-01	05	08	2		4007-2105-01	06	13	1		4110-3020-01	08	14	1		4647-1002-01	03	03	1	
0993-2045-01	07	04	2		4007-2205-02	04	16	1		4110-3021-01	08	10	1		4647-1003-01	13	10	1	
0993-3204-01	06	08	1		4007-2206-02	04	15	1		4110-3022-01	08	07	1		4647-1004-01	03	14	1	
0993-6204-02	10	15	1		4007-2207-01	04	01	1		4110-3033-01	09	14	1		4647-1005-01	03	01	1	
1038-4006-01	15	13	1		4007-2209-01	04	02	1		4110-3042-01	09	36	1		4647-1006-01	03	02	1	
1050-4805-01	15	12	1		4007-2212-02	04	03	1		4110-3051-01	09	22	1		4647-1007-01	13	02	1	
1052-2306-01	04	09	2		4007-2301-01	05	23	1		4110-3104-01	09	25	4		4647-1008-01	13	07	1	
1136-2131-03	08	22	1		4007-2306-02	06	01	1		4110-3201-03	05	15	1		4647-1009-01	03	08	1	
1139-1221-02	01	20	1		4007-2352-02	05	21	1		4110-3322-01	05	27	1		4647-1010-01	12	01	1	
1139-1705-01	02	04	2		4007-2353-02	05	05	1		4110-3323-01	05	14	1		4647-1011-01	02	10	1	
1151-1204-02	01	21	1		4007-2355-01	05	07	1		4110-3502-02	09	10	1		4647-1012-01	02	09	1	
1159-0102-03	01	16	1		4007-3015-01	09	16	1		4110-3503-01	09	21	1		4647-1013-01	02	07	1	
1159-1202-01	01	22	1		4007-3060-01	08	20	1		4110-3504-01	09	08	1		4647-1014-01	02	11	1	
1159-2024-01	04	10	2		4007-3102-01	09	23	1		4110-3507-01	09	02	3		4647-1015-01	02	05	1	
1200-3131-07	10	09	1		4007-3103-01	09	24	1		4110-3916-01	08	06	2		4647-1017-01	03	13	1	
1250-2301-01	04	17	1		4007-3207-01	06	02	1		4110-4103-01	08	16	1		4647-1018-01	03	04	1	
1250-2301-01	05	29	2		4007-3221-01	06	10	4		4110-4104-01	08	04	1		4647-1019-01	14	02	1	
4007-0101-03	05	09	1		4007-3256-01	06	12	1		4110-4105-01	08	03	2		4647-1020-01	13	06	4	
4007-0321-02	09	38	1		4007-3751-01	04	13	1		4110-4106-01	08	17	1		4647-1021-01	03	12	1	
4007-0341-02	05	04	1		4007-3752-01	06	06	2		4110-4107-02	08	23	1		4647-1023-01	14	15	1	
4007-0381-02	09	39	1		4007-4130-01	09	37	1		4110-4108-01	08	01	1		4647-1024-01	14	23	1	
4007-0411-01	08	24	1		4007-5550-01	07	01	1		4110-4111-01	08	19	1		4647-1025-01	14	14	1	
4007-0431-02	07	23	1		4007-5560-02	07	12	1		4110-4114-13	09	01	1		4647-1026-01	13	03	1	
4007-0432-02	07	23	1		4007-6051-02	04	05	1		4110-4117-01	08	18	1		4647-1027-01	13	04	1	
4007-0471-02	01	31	1		4007-6601-02	04	07	1		4110-4118-01	08	21	1		4647-1028-01	14	19	1	
4007-0472-02	01	31	1		4007-7351-01	05	24	1		4110-4124-02	08	02	2		4647-1029-01	14	09	1	
4007-0473-02	01	31	1		4007-7353-01	08	05	1		4110-5501-02	07	19	1		4647-1030-01	13	05	2	
4007-0751-01	05	25	1		4007-7355-02	01	10	1		4110-5502-01	07	13	1		4647-1031-01	03	10	1	
4007-0752-01	06	09	1		4007-7356-01	01	23	1		4110-5511-01	07	10	2		4647-1032-01	03	05	3	
4007-0753-01	06	11	1		4007-7357-01	01	30	1		4110-5517-02	07	09	2		4647-1034-01	02	08	2	
4007-0755-01	09	27	1		4007-7358-01	01	27	1		4110-5536-01	07	11	2		4647-1035-01	02	06	1	
4007-1002-01	06	05	1		4007-7359-01	01	30	1		4110-5537-02	07	18	1		4647-1036-01	02	12	1	
4007-1007-03	04	11	1		4007-7360-01	05	16	1		4111-2015-01	05	11	6		4647-1037-01	14	03	1	
4007-1008-02	09	30	1		4109-3013-02	09	33	1		4122-3001-01	09	13	1		4647-1038-01	03	09	1	
4007-1009-01	01	11	1		4109-3014-12	09	17	1		4122-3055-01	09	06	2		4647-1039-01	03	11	1	
4007-1010-01	04	14	1		4109-3034-13	09	18	1		4122-3056-01	09	05	2		4647-1040-01	13	08	1	
4007-1012-01	06	07	1		4109-3041-03	09	15	1		4122-5522-01	07	21	1		4647-1041-01	03	07	1	
4007-1101-03	01	18	1		4109-3105-02	01	09	1		4156-3838-01	10	08	2		4647-1042-01	03	06	1	
4007-1102-01	01	06	1		4109-3106-02	01	08	1		4165-3816-01	10	14	1		4647-1043-01	14	05	1	
4007-1103-05	01	14	1		4109-3505-01	09	11	2		4165-3818-01	10	04	1		4647-1101-01	12	12	1	
4007-1104-01	01	13	1		4109-5512-01	07	17	1		4165-3824-01	10	12	1		4647-1102-01	13	11	1	
4007-1105-01	06	03	1		4109-5516-01	07	16	4		4165-3831-01	10	10	1		4647-1103-01	14	24	1	
4007-1106-02	07	02	1		4109-5518-01	07	06	1		4165-3833-01	10	18	1		4647-1104-01	12	02	2	
4007-1107-02	04	12	1		4109-5521-01	07	14	1		4165-3912-01	11	07	1		4647-1105-01	13	01	1	
4007-1108-02	01	25	1		4109-5530-01	07	07	1		4165-3916-01	11	02	2		4647-1106-01	12	08	1	
4007-1109-03	01	03	1		4109-5530-01	08	11	1		4165-3918-02	11	08	2		4647-1107-01	12	06	1	
4007-1110-03	01	02	1		4109-5533-01	07	15	4		4165-3920-01	11	03	2		4647-1108-01	12	10	1	
4007-1111-02	01	07	1		4109-6201-02	09	20	1		4165-3927-01	11	10	8		4647-1109-01	12	11	1	
4007-1112-01	01	05	1		4109-6301-01	10	21	1		4470-4024-01	10	03	1		4647-1110-01	12	04	1	
4007-1113-02	01	24	1		4109-6701-01	07	20	1		4498-3334-01	10	06	1		4647-1111-01	14	16	1	
4007-1114-01	05	22	1		4110-0108-13	08	12	1		4498-3345-04	11	01	2		4647-1112-01	14	07	1	
4007-1115-01	05	12	1		4110-0532-02	05	31	1		4498-3402-01	10	24	4		4647-1113-01	14	12	1	
4007-1117-02	01	04	1		4110-0751-01	09	12	1		4498-3404-01	11	09	1		4647-1114-01	14	11	1	
4007-1118-01	01	01	4		4110-0755-01	08	15	1		4498-3490-03	10	23	1		4647-1115-01	14	22	1	
4007-1119-01	05	32	1		4110-1018-01	09	29	1		4498-3491-01	10	22	1		4647-1116-01	14	20	1	
4007-1120-01	01	15	1		4110-1019-01	09	31	1		4498-3833-01	11	06	1		4647-1117-01	14	10	1	
4007-1201-02	01	17	1		4110-1212-01	04	04	1		4646-0301-02	11	12	1		4647-1118-01	14	21	1	
4007-1203-01	01	29	1		4110-2001-02	05	13	2		4646-0302-01	11	12	1		4647-1119-01	14	01	1	
4007-1204-03	01	19	1		4110-2013-15	08	08	1		4646-0321-02	10	16	1		4647-1120-01	14	06	1	

PART NO.	FIG.	INDEX	QTY		PART NO.	FIG.	INDEX	QTY		PART NO.	FIG.	INDEX	QTY		PART NO.	FIG.	INDEX	QTY	
4647-1121-01	14	04	1																
4647-1122-01	14	08	1																
4647-1123-01	12	09	1																
4647-1124-01	12	03	1																
4647-1125-01	14	18	1																
4647-1126-01	14	13	2																
4647-1127-01	14	17	2																
4647-1128-01	12	05	1																
4647-1129-01	12	07	1																
9313-1000-31	07	03	1																
9313-1711-11	05	06	1																
9314-2711-01	05	10	1																
9325-1710-42	05	26	1																
9325-2910-12	08	25	1																
9325-2910-22	08	25	1																
9326-1810-21	05	30	1																
9326-1810-21	10	25	1																
9326-2320-21	02	14	1																
9331-2710-11	07	05	1																
9335-1410-31	07	08	1																
9335-1410-31	08	09	2																
9335-1410-31	10	02	1																
9346-3010-91	04	08	1																
9352-2810-11	07	22	1																
9352-2810-21	07	22	1																
9381-4810-61	05	34	1																
9381-4911-01	05	34	1																
9383-2710-21	05	33	1																
9384-1110-61	15	03	3																
9384-1210-21	15	07	2																
9384-1211-01	15	04	1																
9384-1310-11	15	05	6																
9384-1310-81	15	08	8																
9384-1310-91	15	01	12																
9384-1311-01	15	02	12																
9384-1311-11	15	14	2																
9384-1920-51	04	06	1																
9384-1921-31	15	06	1																
9384-2010-21	15	10	8																
9384-2010-41	15	11	1																
9384-2600-11	15	09	1																



Copyright
2000 MINOLTA Co., Ltd.
Printed in Japan

4007-7995-21 00051730