Di151

SERVICE MANUAL

[FIELD SERVICE]

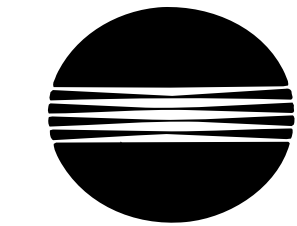

MINOLTA

Safety Precautions for Inspection and Service

When performing inspection and service procedures, observe the following precautions to prevent accidents and ensure utmost safety.

✻ Depending on the model, some of the precautions given in the following do not apply.

Different markings are used to denote specific meanings as detailed below.



WARNING Indicates a potentially hazardous situation which, if not avoided, could result in death or serious injury.



CAUTION Indicates a potentially hazardous situation which, if not avoided, may result in minor or moderate injury. It may also be used to alert against unsafe practices.

The following graphic symbols are used to give instructions that need to be observed.



Used to call the service technician's attention to what is graphically represented inside the marking (including a warning).



Used to prohibit the service technician's from doing what is graphically represented inside the marking.



Used to instruct the service technician's to do what is graphically represented inside the marking.

 WARNING

1. Always observe precautions.



- Parts requiring special attention in this product will include a label containing the mark shown on the left plus precautionary notes. Be sure to observe the precautions.
- Be sure to observe the "Safety Information" given in the Operator's Manual.

2. Before starting the procedures, be sure to unplug the power cord.



- This product contains a high-voltage unit and a circuit with a large current capacity that may cause an electric shock or burn.
- The product also contains parts that can jerk suddenly and cause injury.
- If this product uses a laser, laser beam leakage may cause eye damage or blindness.

3. Use the specified parts.



- For replacement parts, always use the genuine parts specified in the manufacturer's parts manual. Installing a wrong or unauthorized part could cause dielectric breakdown, overload, or undermine safety devices resulting in possible electric shock or fire.
- Replace a blown electrical fuse or thermal fuse with its corresponding genuine part specified in the manufacturer's parts manual. Installing a fuse of a different make or rating could lead to a possible fire. If a thermal fuse blows frequently, the temperature control system may have a problem and action must be taken to eliminate the cause of the problem.

4. Handle the power cord with care and never use a multiple outlet.



- Do not break, crush or otherwise damage the power cord. Placing a heavy object on the power cord, or pulling or bending it may damage it, resulting in a possible fire or electric shock.
- Do not use a multiple outlet to which any other appliance or machine is connected.
- Be sure the power outlet meets or exceeds the specified capacity.

5. Be careful with the high-voltage parts.



- A part marked with the symbol shown on the left carries a high voltage. Touching it could result in an electric shock or burn. Be sure to unplug the power cord before servicing this part or the parts near it.

6. Do not work with wet hands.



- Do not unplug or plug in the power cord, or perform any kind of service or inspection with wet hands. Doing so could result in an electric shock.

7. Do not touch a high-temperature part.



- A part marked with the symbol shown on the left and other parts such as the exposure lamp and fusing roller can be very hot while the machine is energized. Touching them may result in a burn.
- Wait until these parts have cooled down before replacing them or any surrounding parts.

8. Maintain a grounded connection at all times. (This item may not apply in the USA.)



- Be sure to connect the ground wire to the ground terminal even when performing an inspection or repair. Without proper grounding, electrical leakage could result in an electric shock or fire.
- Never connect the ground wire to a gas pipe, water pipe, telephone ground wire, or a lightning conductor.

9. Do not remodel the product.



- Modifying this product in a manner not authorized by the manufacturer may result in a fire or electric shock. If this product uses a laser, laser beam leakage may cause eye damage or blindness.

10. Restore all parts and harnesses to their original positions.



- To promote safety and prevent product damage, make sure the harnesses are returned to their original positions and properly secured in their clamps and saddles in order to avoid hot parts, high-voltage parts, sharp edges, or being crushed.
- To promote safety, make sure that all tubing and other insulating materials are returned to their original positions. Make sure that floating components mounted on the circuit boards are at their correct distance and position off the boards.

CAUTION

1. Precautions for Service Jobs

- A toothed washer and spring washer, if used originally, must be reinstalled. Omitting them may result in contact failure which could cause an electric shock or fire.
- When reassembling parts, make sure that the correct screws (size, type) are used in the correct places. Using the wrong screw could lead to stripped threads, poorly secured parts, poor insulating or grounding, and result in a malfunction, electric shock or injury.
- Take great care to avoid personal injury from possible burrs and sharp edges on the parts, frames and chassis of the product.
- When moving the product or removing an option, use care not to injure your back or allow your hands to be caught in mechanisms.

2. Precautions for Servicing with Covers and Parts Removed

- Wherever feasible, keep all parts and covers mounted when energizing the product.
- If energizing the product with a cover removed is absolutely unavoidable, do not touch any exposed live parts and use care not to allow your clothing to be caught in the moving parts. Never leave a product in this condition unattended.
- Never place disassembled parts or a container of liquid on the product. Parts falling into, or the liquid spilling inside, the mechanism could result in an electric shock or fire.
- Never use a flammable spray near the product. This could result in a fire.
- Make sure the power cord is unplugged before removing or installing circuit boards or plugging in or unplugging connectors.
- Always use the interlock switch actuating jig to actuate an interlock switch when a cover is opened or removed. The use of folded paper or some other object may damage the interlock switch mechanism, possibly resulting in an electric shock, injury or blindness.

3. Precautions for the Working Environment

- The product must be placed on a flat, level surface that is stable and secure.
- Never place this product or its parts on an unsteady or tilting workbench when servicing.
- Provide good ventilation at regular intervals if a service job must be done in a confined space for a long period of time.
- Avoid dusty locations and places exposed to oil or steam.
- Avoid working positions that may block the ventilation ports of the product.

4. Precautions for Handling Batteries

- Replace a rundown battery with the same type as specified in the manufacturer's parts manual.
- Before installing a new battery, make sure of the correct polarity of the installation or the battery could burst.
- Dispose of used batteries according to the local regulations. Never dispose of them at the user's premises or attempt to try to discharge one.

5. Precautions for the Laser Beam (Only for Products Employing a Laser)

- Removing the cover marked with the following caution label could lead to possible exposure to the laser beam, resulting in eye damage or blindness. Be sure to unplug the power cord before removing this cover.
- If removing this cover while the power is ON is unavoidable, be sure to wear protective laser goggles that meet specifications.
- Make sure that no one enters the room when the machine is in this condition.
- When handling the laser unit, observe the “Precautions for Handling Laser Equipment.”



1167P001AA

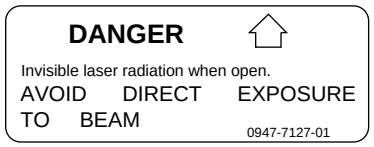

1144D270AA

Other Precautions

- To reassemble the product, reverse the order of disassembly unless otherwise specified.
- While the product is energized, do not unplug or plug connectors into the circuit boards or harnesses.
- The magnet roller generates a strong magnetic field. Do not bring it near a watch, floppy disk, magnetic card, or CRT tube.
- An air gun and vacuum cleaner generates a strong electrostatic charge that can destroy the ATDC sensor and other sensors. Before cleaning a component with one of these devices, be sure to remove all the sensors. Otherwise, use a blower brush and cloth when cleaning parts.
- When handling circuit boards with MOS ICs, observe the “INSTRUCTIONS FOR HANDLING THE PWBs WITH MOS ICs” (applicable only to the products using MOS ICs).
- The PC Drum is a very delicate component. Observe the precautions given in “HANDLING OF THE PC DRUM” because mishandling may result in serious image problems.
- Note that replacement of a circuit board may call for readjustments or resetting of particular items, or software installation.
- After completing a service job, perform a safety check. Make sure that all parts, wiring and screws are returned to their original positions.
- Check the area surrounding the service site for any signs of damage, wear or need of repair.
- Do not pull out the toner hopper while the toner bottle is turning. This could result in a damaged hopper motor or locking mechanism.
- If the product is to be run with the front door open, make sure that the toner hopper is in the locked position.

Used Batteries Precautions

ALL Areas

CAUTION

Danger of explosion if battery is incorrectly replaced.
Replace only with the same or equivalent type recommended by the manufacturer.
Dispose of used batteries according to the manufacturer's instructions.

Germany

VORSICHT!

Explosionsgefahr bei unsachgemäßem Austausch der Batterie.
Ersatz nur durch denselben oder einen vom Hersteller empfohlenen ähnlichen Typ.
Entsorgung gebrauchter Batterien nach Angaben des Herstellers.

France

ATTENTION

Ily a danger d'explosion s'ily a remplacement incorrec de la batterie.
Remplacer uniquement avec une batterie du meme type ou d'un type équivalent recommande par le constructueur.
Mettre au rebut les batteries usageés conformément aux instructions du fabricant.

Denmark

ADVARSEL!

Lithiumbatteri - Eksplosionsfare ved fejlagtig håndtering Udskiftning må kun ske med batteri af samme fabrikat og type.
Levér det brugte batteri tilbage til leverandøren.

Norway

ADVARSEL

Eksplosjonsfare ved feilaktig skifte av batteri.
Benytt samme batteritype eller en tilsvarende type anbefalt av apparatfabrikanten.
Brukte batterier kasseres i henhold til fabrikantens instruksjoner.

Sweden

VARNING

Explosionsfara vid felaktigt batteribyte.
Använd samma batterityp eller en ekvivalent typ som rekommenderas av apparattillverkaren.
Kassera använt batteri enligt fabrikantens instruktion.

Finland

VAROITUS

Paristo voi räjähtää, los se on virheellisesti asennettu.
Vaihda paristo ainoastaan laitevalmistajan suosittelemaan tyyppiin. Hävitä Käytetty paristo valmistajan ohjeiden mukaisesti.

PRECAUTIONS FOR SERVICE

When performing inspection and service procedures, observe the following precautions to prevent mishandling of the machine and its parts.
✻ Depending on the model, some of the precautions given in the following do not apply.

Precautions Before Service

- When the user is using a word processor or personal computer from a wall outlet of the same line, take necessary steps to prevent the circuit breaker from opening due to overloads.
- Never disturb the LAN by breaking or making a network connection, altering termination, installing or removing networking hardware or software, or shutting down networked devices without the knowledge and express permission of the network administrator or the shop supervisor.

How to Use this Book

1. DIS/REASSEMBLY, ADJUSTMENT
- To reassemble the product, reverse the order of disassembly unless otherwise specified.

2. TROUBLESHOOTING
- If a component on a PWB or any other functional unit including a motor is defective, the text only instructs you to replace the whole PWB or functional unit and does not give troubleshooting procedures applicable within the defective unit.
- All troubleshooting procedures contained herein assume that there are no breaks in the harnesses and cords and all connectors are plugged into the right positions.
- The procedures preclude possible malfunctions due to noise and other external causes.

Precautions for Service

- Check the area surrounding the service site for any signs of damage, wear or need of repair.
- Keep all disassembled parts in good order and keep tools under control so that none will be lost or damaged.
- After completing a service job, perform a safety check. Make sure that all parts, wiring and screws are returned to their original positions.
- Do not pull out the toner hopper while the toner bottle is turning. This could result in a damaged motor or locking mechanism.
- If the product is to be run with the front door open, make sure that the toner hopper is in the locked position.
- Do not use an air gun or vacuum cleaner for cleaning the ATDC Sensor and other sensors, as they can cause electrostatic destruction. Use a blower brush and cloth. If a unit containing these sensors is to be cleaned, first remove the sensors from the unit.

Precautions for Dis/Reassembly

- Be sure to unplug the copier from the outlet before attempting to service the copier.
- The basic rule is not to operate the copier anytime during disassembly. If it is absolutely necessary to run the copier with its covers removed, use care not to allow your clothing to be caught in revolving parts such as the timing belt and gears.
- Before attempting to replace parts and unplug connectors, make sure that the power cord of the copier has been unplugged from the wall outlet.
- Be sure to use the Interlock Switch Actuating Jig whenever it is necessary to actuate the Interlock Switch with the covers left open or removed.
- Do not plug in or unplug print jacks on the PWB or connect or disconnect the PWB connectors while power is being supplied to the copier.
- Never use flammable sprays near the copier.
- A battery (lithium, nickel-cadmium, etc.) is used in this machine. Do not charge or short circuit it and make sure of the correct polarity at replacement.
- A used battery should be disposed of according to the local regulations and never be discarded casually or left unattended at the user's premises.
- When reassembling parts, make sure that the correct screws (size, type) and toothed washer are used in the correct places.
- If it becomes necessary to replace the thermal fuse or any other fuse mounted on a board, be sure to use one of the rating marked on the blown fuse. Always note the rating marked on the fuse, as the rating and mounting site or number used are subject to change without notice.

Precautions for Circuit Inspection

- Never create a closed circuit across connector pins except those specified in the text and on the printed circuit.
- When creating a closed circuit and measuring a voltage across connector pins specified in the text, be sure to use the GND wire.

Handling of PWBs

1. During Transportation/Storage:

- During transportation or when in storage, new P.W. Boards must not be indiscriminately removed from their protective conductive bags.
- Do not store or place P.W. Boards in a location exposed to direct sunlight and high temperature.
- When it becomes absolutely necessary to remove a Board from its conductive bag or case, always place it on its conductive mat in an area as free as possible from static electricity.
- Do not touch the pins of the ICs with your bare hands.
- Protect the PWBs from any external force so that they are not bent or damaged.

2. During Inspection/Replacement:

- Avoid checking the IC directly with a multimeter; use connectors on the Board.
- Never create a closed circuit across IC pins with a metal tool.
- Before unplugging connectors from the P.W. Boards, make sure that the power cord has been unplugged from the outlet.
- When removing a Board from its conductive bag or conductive case, do not touch the pins of the ICs or the printed pattern. Place it in position by holding only the edges of the Board.
- When touching the PWB, wear a wrist strap and connect its cord to a securely grounded place whenever possible. If you cannot wear a wrist strap, touch a metal part to discharge static electricity before touching the PWB.
- Note that replacement of a PWB may call for readjustments or resetting of particular items.

Handling of Other Parts

- The magnet roller generates a strong magnetic field. Do not bring it near a watch, floppy disk, magnetic card, or CRT tube.

Handling of the PC Drum

✻ Only for Products Not Employing an Imaging Cartridge.

1. During Transportation/Storage:

- Use the specified carton whenever moving or storing the PC Drum.
- The storage temperature is in the range between –20°C and +40°C.
- In summer, avoid leaving the PC Drum in a car for a long time.

2. Handling:

- Ensure that the correct PC Drum is used.
- Whenever the PC Drum has been removed from the copier, store it in its carton or protect it with a Drum Cloth.
- The PC Drum exhibits greatest light fatigue after being exposed to strong light over an extended period of time. Never, therefore, expose it to direct sunlight.
- Use care not to contaminate the surface of the PC Drum with oil-base solvent, fingerprints, and other foreign matter.
- Do not scratch the surface of the PC Drum.
- Do not apply chemicals to the surface of the PC Drum.
- Do not attempt to wipe clean the surface of the PC Drum.

If, however, the surface is contaminated with fingerprints, clean it using the following procedure.

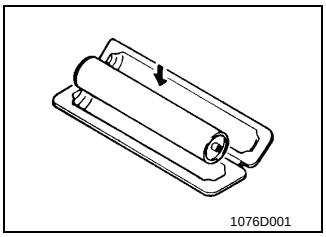

1. Place the PC Drum into one half of its carton.

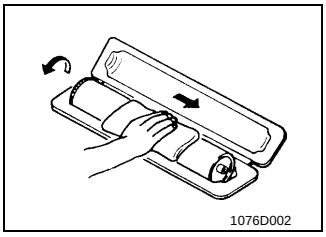

2. Gently wipe the residual toner off the surface of the PC Drum with a dry, Dust-Free Cotton Pad.

A. Turn the PC Drum so that the area of its surface on which the line of toner left by the Cleaning Blade is present is facing straight up. Wipe the surface in one continuous movement from the rear edge of the PC Drum to the front edge and off the surface of the PC Drum.

B. Turn the PC Drum slightly and wipe the newly exposed surface area with a CLEAN face of the Dust-Free Cotton Pad. Repeat this procedure until the entire surface of the PC Drum has been thoroughly cleaned.

✻ At this time, always use a CLEAN face of the dry Dust-Free Cotton Pad until no toner is evident on the face of the Pad after wiping.

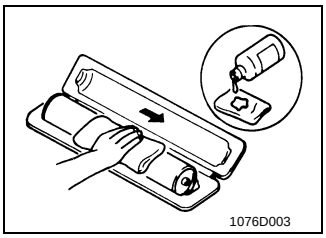

3. Soak a small amount of either ethyl alcohol or isopropyl alcohol into a clean, unused Dust-Free Cotton Pad which has been folded over into quarters. Now, wipe the surface of the PC Drum in one continuous movement from its rear edge to its front edge and off its surface one to two times.

✻ Never move the Pad back and forth.

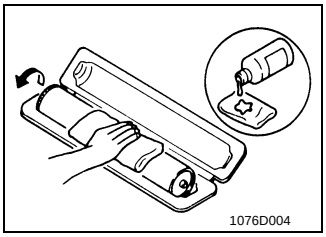

4. Using the SAME face of the Pad, repeat the procedure explained in the latter half of step 3 until the entire surface of the PC Drum has been wiped. Always OVERLAP the areas when wiping. Two complete turns of the PC Drum would be appropriate for cleaning.

NOTES

- *Even when the PC Drum is only locally dirtied, wipe the entire surface.*
- *Do not expose the PC Drum to direct sunlight. Clean it as quickly as possible even under interior illumination.*
- *If dirt remains after cleaning, repeat the entire procedure from the beginning one more time.*

Handling of the Imaging Cartridge

✻ Only for Products Employing an Imaging Cartridge.

1. During Transportation/Storage:

- The storage temperature is in the range between –20°C and +40°C.
- In summer, avoid leaving the Imaging Cartridge in a car for a long time.

2. Handling:

- Store the Imaging Cartridge in a place that is not exposed to direct sunlight.

3. Precautionary Information on the PC Drum Inside the Imaging Cartridge:

- Use care not to contaminate the surface of the PC Drum with oil-base solvent, fingerprints, and other foreign matter.
- Do not scratch the surface of the PC Drum.
- Do not attempt to wipe clean the surface of the PC Drum.

FrameMaker Ver.5.5(PC) Di151
00.03.29

INDEX (FIELD SERVICE)

DIS/REASSEMBLY, ADJUSTMENT

SWITCHES ON PWBs, TECH. REP. SETTINGS

TROUBLESHOOTING

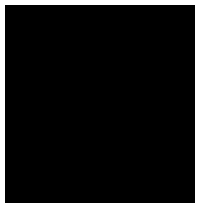

DIS/REASSEMBLY, ADJUSTMENT

CONTENTS

1. SERVICE INSTRUCTIONS D-1
1-1. IDENTIFICATION OF FUSES D-1
1-2. PRECAUTIONS FOR HANDLING THE LASER EQUIPMENT D-1
1-3. PARTS WHICH MUST NOT BE TOUCHED D-2
(1) Red Screws D-2
(2) Variable Resistors on Board D-2
(3) Other Screws D-2
1-4. READING THE TEXT D-3
2. DISASSEMBLY/REASSEMBLY D-4
2-1. COVERS AND EXTERIOR PARTS: IDENTIFICATION AND REMOVAL PROCEDURES D-4
2-2. REMOVAL OF PWBs D-6
2-3. MAINTENANCE SCHEDULE D-7
2-4. REMOVAL OF UNITS D-8
(1) Removal of the Upper Half of the Copier D-8
(2) Removal of the IR Unit D-11
(3) Removal of the PH Unit D-12
(4) Removal of the Fusing Unit D-15
2-5. IMAGE TRANSFER SECTION D-17
(1) Replacement of the Image Transfer Roller D-17
2-6. FUSING SECTION D-18
(1) Removal of the Fusing Backup Roller D-18
(2) Removal of the Fusing Heater Lamp D-20
(3) Removal of the Fusing Roller D-21
2-7. MISCELLANEOUS D-22
(1) Removal of the Scanner and Timing Belt D-22
(2) Removal of the Scanner Motor D-24
(3) Removal of the Paper Take-Up Roll D-25
(4) Removal of the Paper Take-Up Solenoid D-26
(5) Removal of the Main Motor and PH Section Cooling Fan Motor D-28
3. ADJUSTMENT D-30
3-1. ADJUSTMENT REQUIREMENTS LIST D-30
3-2. ADJUSTMENT OF UPPER UNIT INTERLOCK SWITCH S2 ..... D-31
3-3. ELECTRICAL/IMAGE ADJUSTMENT D-32
(1) Entering the Tech. Rep. Mode D-32
(2) Entering the Adjust Mode D-32
(3) Producing a Test Pattern D-32
(4) CD Registration Adjustment (Paper Tray) D-33
(5) FD Registration Adjustment (Paper Tray) D-34
(6) CD Zoom Ratio Adjustment (Scanner) D-35
(7) FD Zoom Ratio Adjustment (Scanner) D-36
(8) CD Registration Adjustment (Scanner) D-37
(9) FD Registration Adjustment (Scanner) D-38
4. MISCELLANEOUS D-39
4-1. TORSION BAR POSITION ADJUSTMENT D-39
4-2. REMOUNTING EEPROM (U21) D-40

1. SERVICE INSTRUCTIONS

1-1. IDENTIFICATION OF FUSES

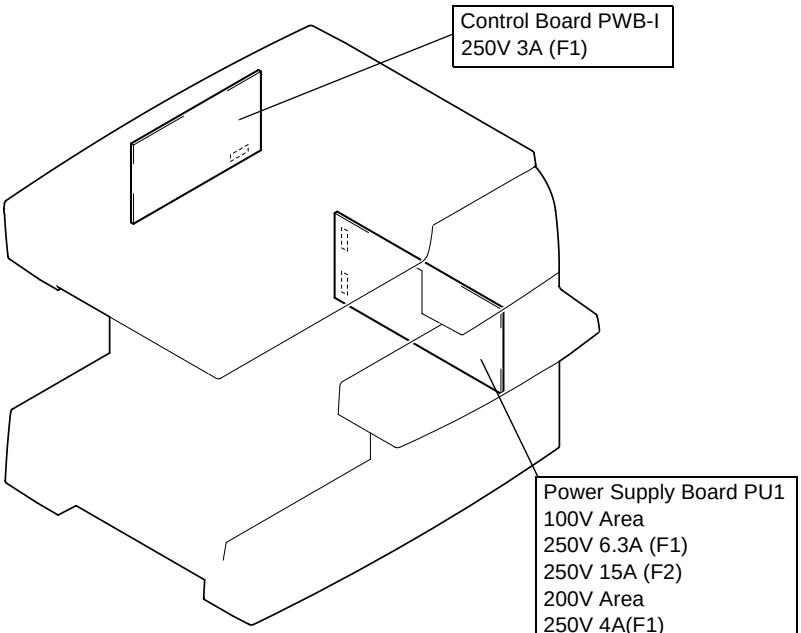

1-2. PRECAUTIONS FOR HANDLING THE LASER EQUIPMENT

- The laser used in this copier is a semiconductor laser with the following specifications:

Max. power: 5 mW Output wavelength: 770 to 795 nm

- When laser protective goggles are to be used, select ones with a lens conforming to the above specifications.
- When a disassembly job needs to be performed in the laser beam path, such as when working around the PH and PC Drum, be sure to turn the copier OFF first.
- If the job requires that the copier be left ON, take off your watch and ring and wear laser protective goggles.
- A highly reflective tool can be dangerous if it is brought into the laser beam path. Use utmost care when handling such tools near the laser.
- The PH is not maintainable in the field. It is to be replaced as a unit including the control board. Never, therefore, attempt to remove the laser diode or adjust trimmers on the control board.

1-3. PARTS WHICH MUST NOT BE TOUCHED

(1) Red Screws

Purpose of Application of Red Paint
Red painted screws show that the assembly or unit secured can only be adjusted or set at the factory and should not be readjusted, set, or removed in the field.
Note that when two or more screws are used on the part in question, only one representative screw may be marked with red paint.

(2) Variable Resistors on Board

Do not turn the variable resistors on boards for which no adjusting instructions are given in "ADJUSTMENT."

(3) Other Screws

Scanner

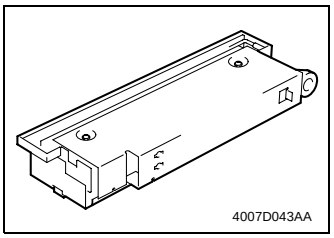

PH Unit

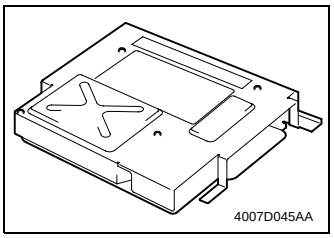

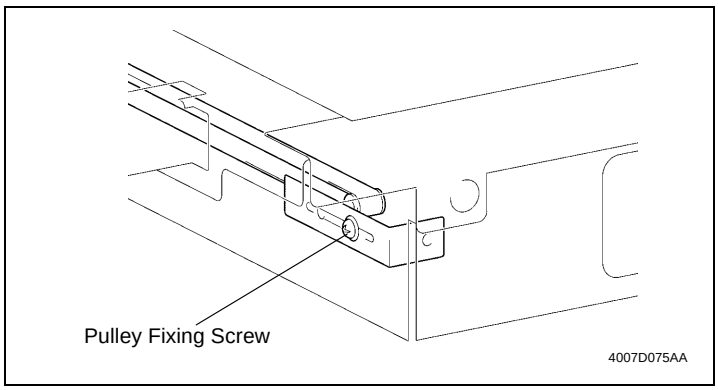

1-4. READING THE TEXT

Disassembly procedures are given under separate titles; illustrations identify each part only.
Parts that require special attention and service jobs are given at the corresponding part name in the illustration.
The disassembly procedures omit removal of exterior parts.
☞ D-4

Remove the roller after the I/C has been taken out of the copier.
1. Image Transfer Roller cover
2. Image Transfer Roller

Disassembly Procedures

Image Transfer Roller
◎ Replace.

Part requiring service jobs.

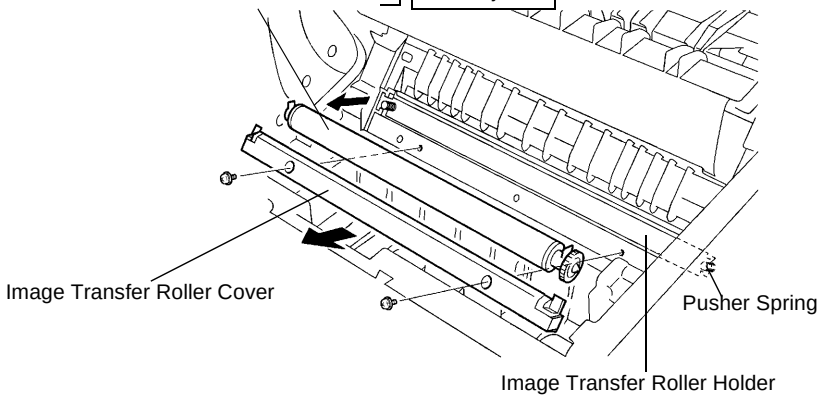

4007D017AA

2. DISASSEMBLY/REASSEMBLY

2-1. COVERS AND EXTERIOR PARTS: IDENTIFICATION AND REMOVAL PROCEDURES

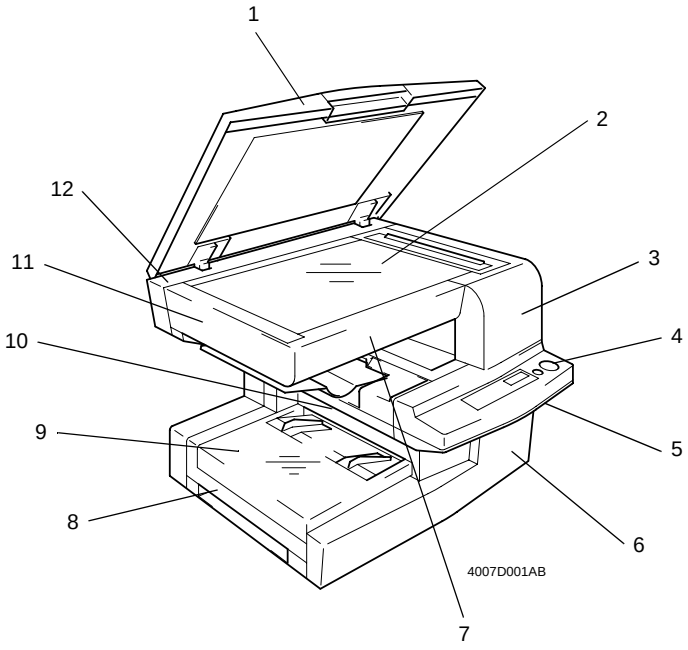

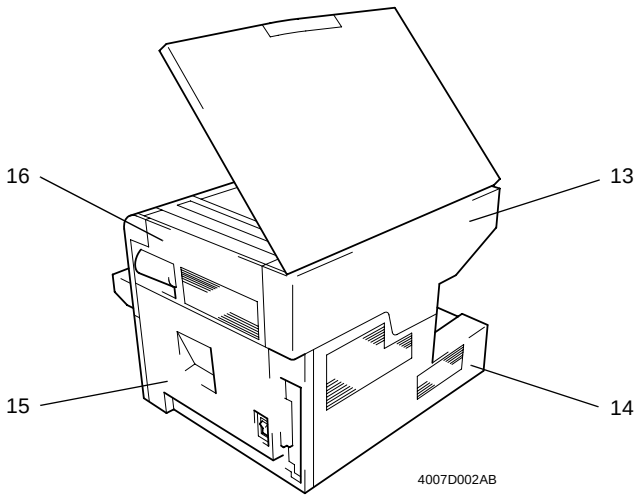

No.	Name	Removal Procedure
1	Original Cover	Remove screws that secure the Original Cover.
2	Original Glass	Remove 1. → Remove 13. → Remove 12. → Remove 3. → Remove 7. → Remove the Original Glass holding brackets (two at the front).
3	Front Upper Cover	Remove screws that secure the Front Upper Cover.
4	Control Panel	Remove 3. → Remove screws that secure the control panel.
5	Front Middle Cover	Remove 3. → Remove 4. → Remove screws that secure the Front Middle Cover.
6	Front Lower Cover	Release and swing up the upper half of the copier. → Remove screws that secure the Front Lower Cover.
7	Front IR Cover	Remove 3. → Remove screws that secure the Front IR Cover.
8	Paper Tray	Remove 9. → Release and swing up the upper half of the copier. → Remove 6. → Remove 14. → Remove the screw that secures the Paper Tray.
9	Manual Bypass Tray	———
10	Paper Exit Tray Lower Cover	Remove 9. → Remove 6. → Remove 14. → Remove 8. → Remove screws that secure the Paper Exit Tray Lower Cover.
11	Left IR Cover	Remove 1. → Remove 3. → Remove 7. → Remove 13. → Remove 12. → Remove screws that secure the Left IR Cover.
12	Rear IR Upper Cover	Remove 1. → Remove 13. → Remove screws that secure the Rear IR Upper Cover.
13	Rear Upper Cover	Remove 14. → Remove screws that secure the Rear Upper Cover.
14	Rear Lower Cover	Remove screws that secure the Rear Lower Cover.
15	Right Cover	Release and swing up the upper half of the copier. → Remove the 14. → Remove screws that secure the Right Cover.
16	Right IR Cover	Remove 3. → Remove 1. → Remove 13. → Remove 12. → Remove screws that secure the Right IR Cover.

2-2. REMOVAL OF PWBs

- The removal procedures given below omit the steps of unplugging connectors and removing the PWB from the PWB support.
- Where it is absolutely necessary to touch the ICs and other electrical components on the board, be sure to ground your body.

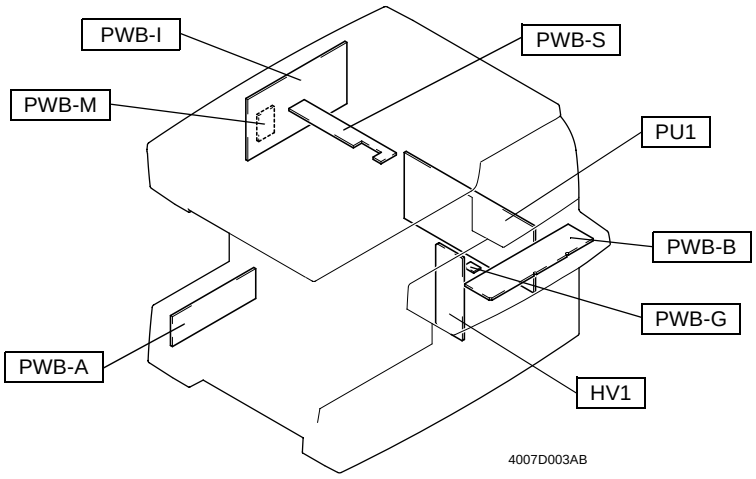

Symbol	Name	Removal Procedure
PWB-A	Master Board	Remove the Rear Upper Cover and Rear Lower Cover. → Remove the protective cover. → PWB-A
PWB-B	Control Panel	Remove the Front Upper Cover. → Remove the Control Panel. → PWB-B
PWB-G	Toner Empty Board	Remove all exterior covers. → Remove the upper half of the copier. → Remove the rear side plate. → Remove the Paper Take-Up Roll Cover Assy. → PWB-G
PWB-I	Control Board	Remove the Rear Lower Cover and Rear Upper Cover. → Remove the protective cover. → PWB-I
PWB-M	Memory Board	Remove the Rear Lower Cover and Rear Upper Cover. → Remove the protective cover. → PWB-M
PWB-S	Scanner Interface Board	Remove the Front Upper Cover, Front IR Cover, Rear IR Upper Cover, Rear Upper Cover, and Rear Lower Cover. → Remove the Original Glass bracket. → Remove the Original Glass. → Remove the protective cover. → PWB-S
PU1	Power Supply Board	Release and swing up the upper half of the copier. → Remove the Right Cover. → Remove the Power Switch. → Remove the Fusing Section Cooling Fan Motor. → Remove the Fusing Section Cooling Fan Motor mounting bracket. → Remove the Inlet mounting bracket. → PU1
HV1	High Voltage Unit	Remove the Paper Exit Tray Lower Cover. → Remove the Paper Exit Tray. → Release and swing up the upper half of the copier. → Remove the Cover. → Remove the I/C. → Remove the PH Unit. → HV1

2-3. MAINTENANCE SCHEDULE

- To ensure that the copier produces good copies and to extend its service life, it is recommended that the maintenance jobs described in this schedule be carried out as instructed.

	PM Parts	Maintenance Schedule (K)		Part No.	Qty	Reference Page
		Cleaning	Replacement			
Fusing Section	Fusing Unit	—	50	100V Area 4007-0431-02 200V Area 4007-0432-02	1	☞ D-15
Image Transfer Section	Image Transfer Roller	—	50	4110-4103-01	1	☞ D-17

2-4. REMOVAL OF UNITS

(1) Removal of the Upper Half of the Copier

Remove the upper half of the copier after the Front Upper Cover, control panel, Front Middle Cover, Rear Upper Cover, and Paper Exit Tray Lower Cover have been removed.

1. Protective cover
2. Control Board

NOTE
Unplug all print jacks from the PWB.

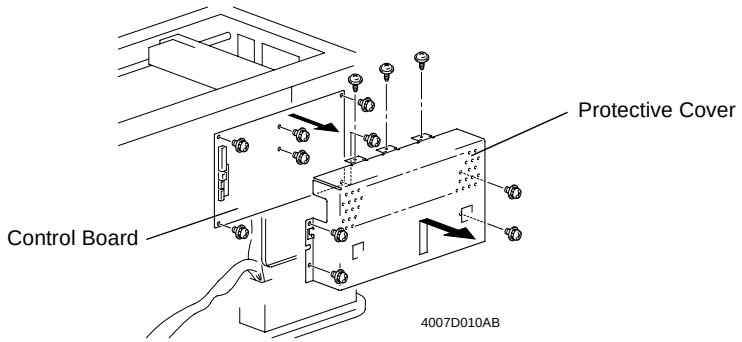

3. IR Lower Cover

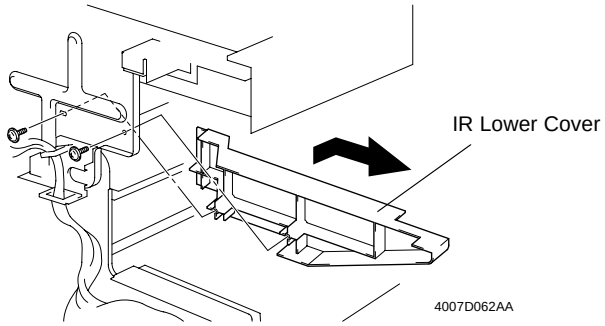

4. Paper Exit Tray

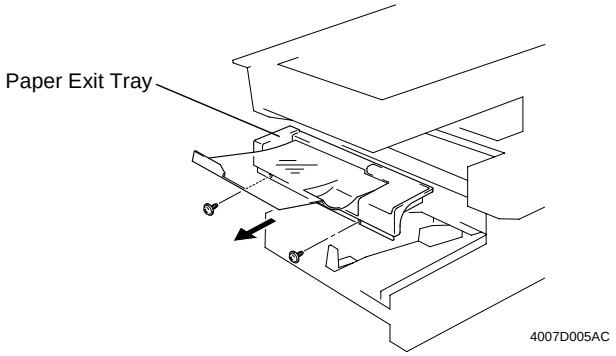

5. Torsion Bars A and B

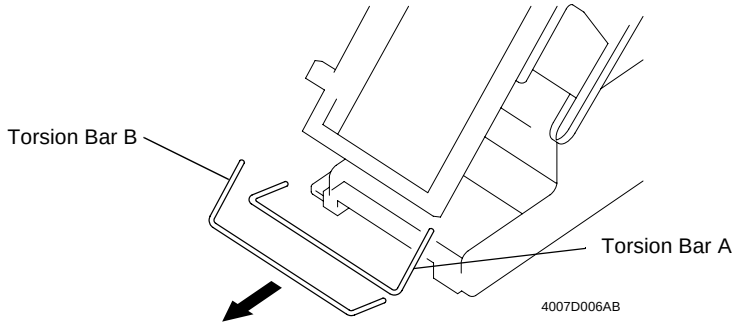

Torsion Bar Mounting Position

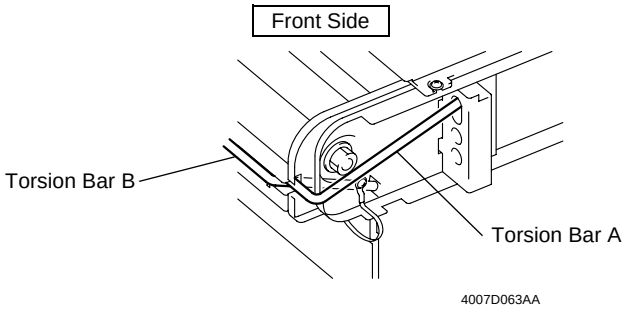

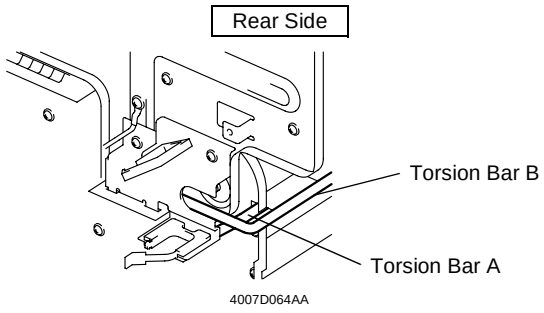

NOTE
Before removing or reinstalling the torsion bars, be sure to release and swing up the upper half of the copier to release pressure.
When reinstalling them, install torsion bar A first, then torsion bar B.

6. Lock Plate

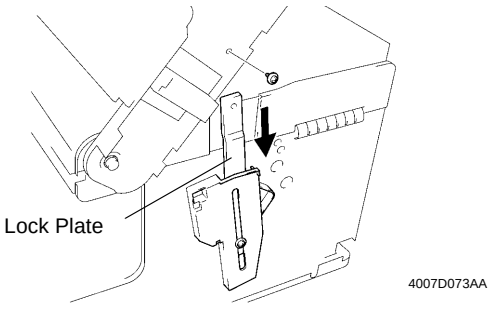

7. Shoulder screws and other screws

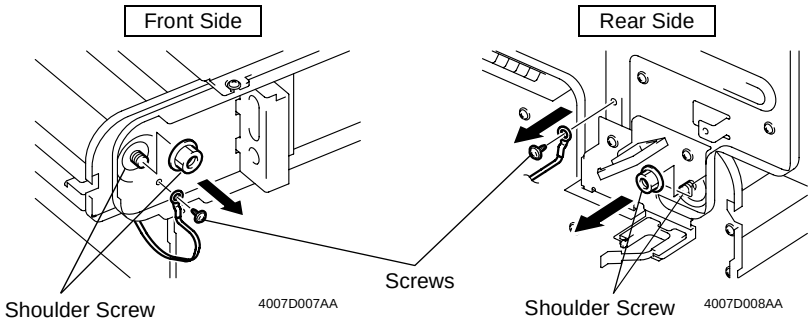

NOTE
When mounting the shoulder screws, make sure that the round hole and the slot in the frames are properly aligned with each other.

8. Upper half of the copier

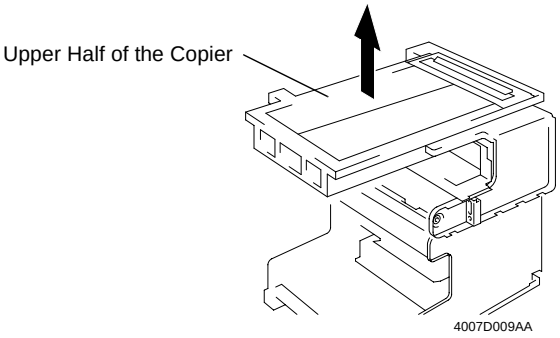

(2) Removal of the IR Unit

Remove the IR Unit after the Front Upper Cover, Front IR Cover, Rear IR Upper Cover, Rear Upper Cover, Rear Lower Cover, and Right IR Cover have all been removed.

1. Protective Cover
2. Control Board

NOTE
Unplug all print jacks from the PWB.

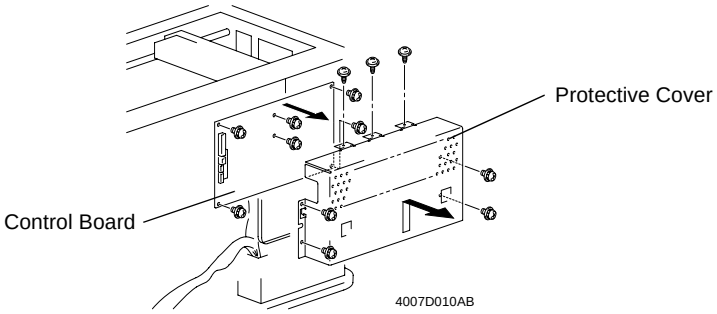

3. ADF Set Switch hookup connector
4. IR Unit

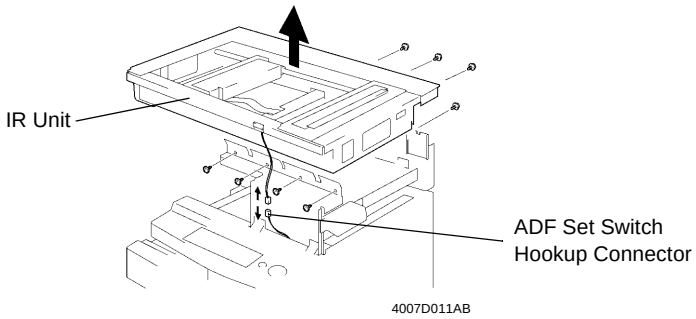

(3) Removal of the PH Unit

Remove the PH Unit after the Front Lower Cover, Rear Lower Cover, Paper Exit Tray Lower Cover, and I/C have been removed.

1. Protective cover
2. Control Board

NOTE

Unplug all print jacks from the PWB.

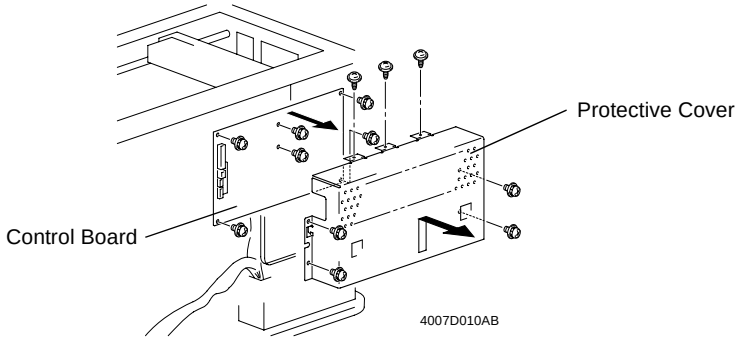

3. IR Lower Cover

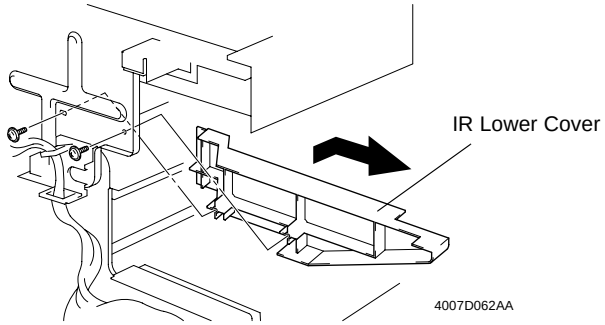

4. Paper Exit Tray

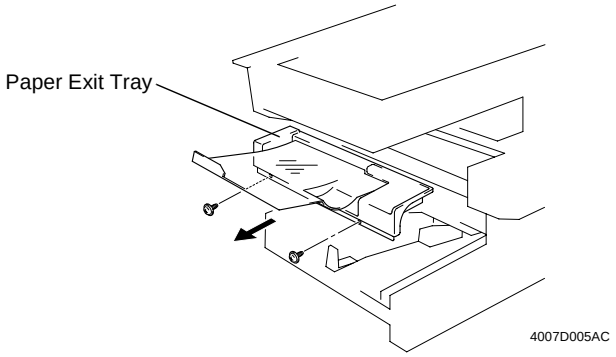

5. Protective Cover

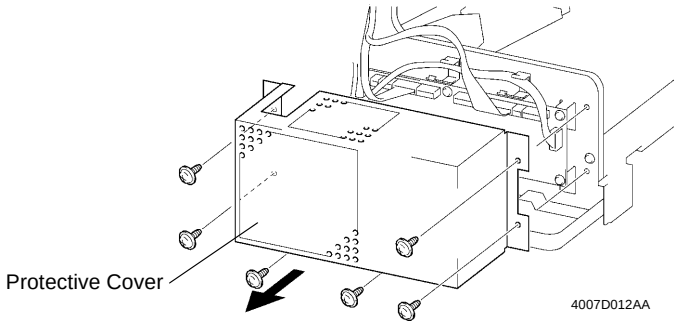

6. Print Jack

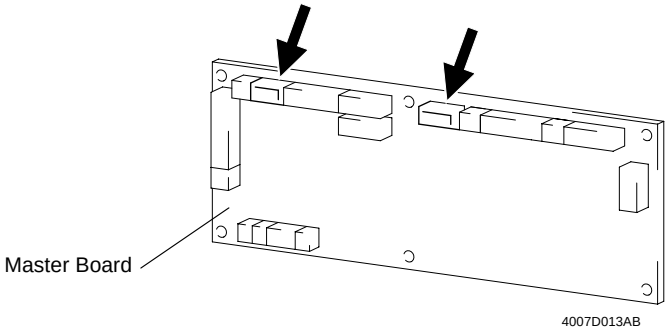

7. PH Unit fixing screws

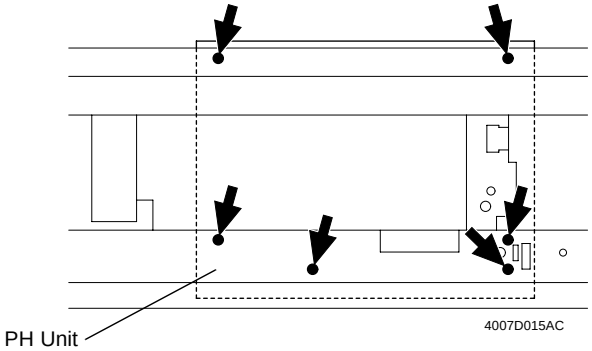

8. Cover
9. PH Unit

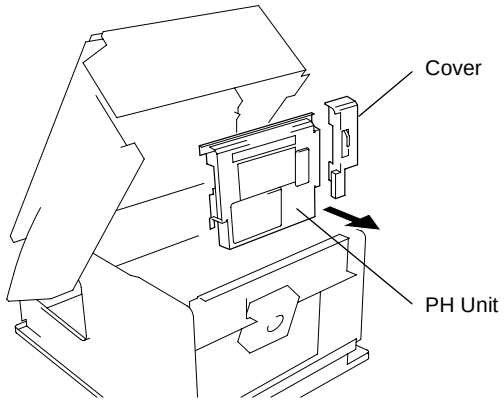

4007D014AA

NOTE
Take care with the torsion bars: They will come off when the upper half of the copier is swung up.

(4) Removal of the Fusing Unit

Remove the Fusing Unit after the Right Cover, Rear Lower Cover, Front Lower Cover, and I/C have been removed.

1. Fusing cover

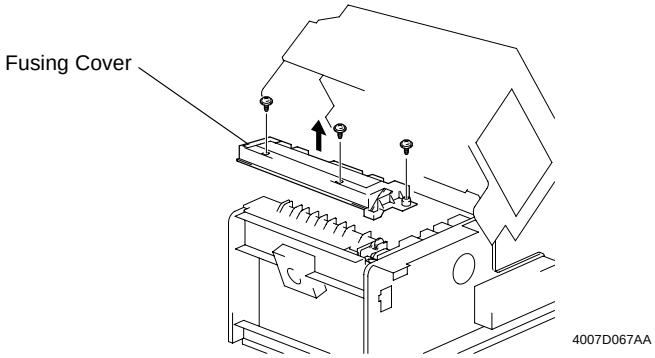

2. Cover

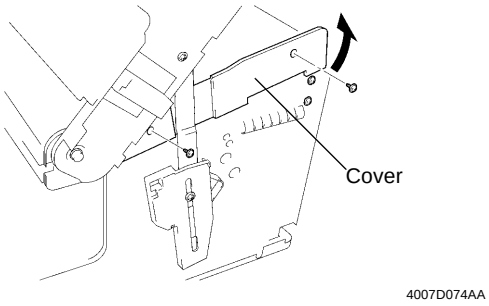

3. Fusing Section Cooling Fan Motor
4. Right Side Plate

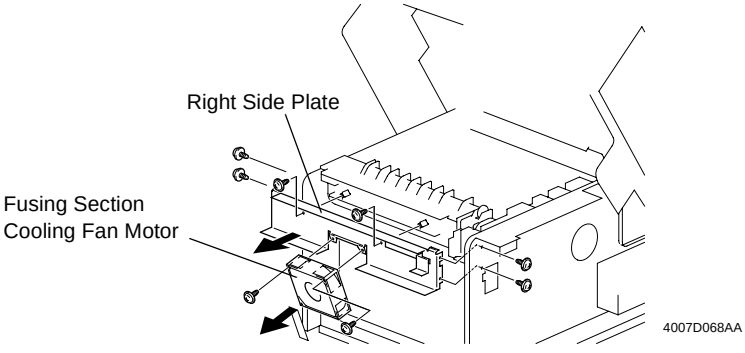

5. Fusing Unit

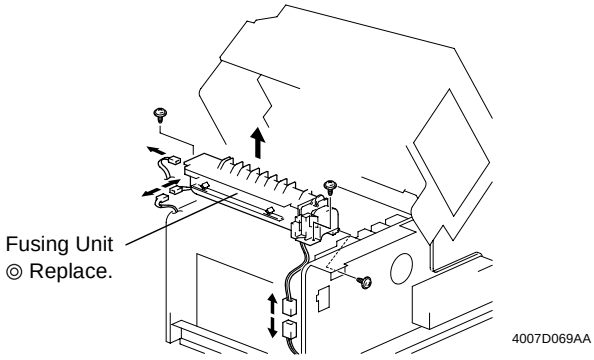

2-5. IMAGE TRANSFER SECTION

(1) Replacement of the Image Transfer Roller

Remove the Image Transfer Roller after the I/C have been removed.

1. Image Transfer Roller cover
2. Image Transfer Roller

Image Transfer Roller
◎ Replace.

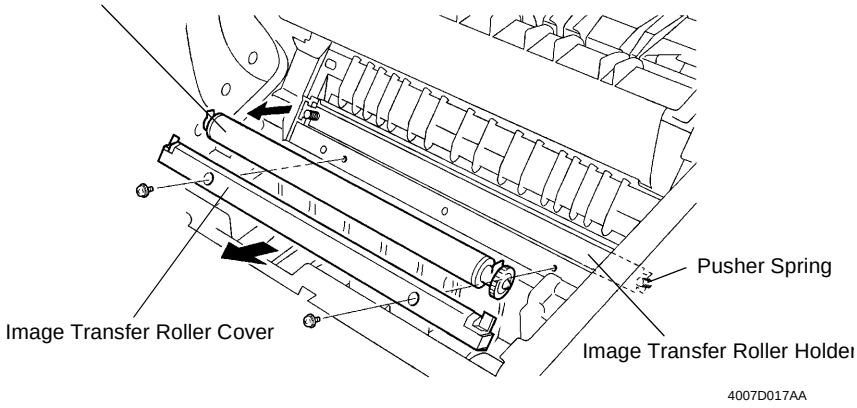

NOTE
Be sure not to lose the pusher springs hooked to the Image Transfer Roller holder.

3. Gear
4. Bushing
5. Roll
6. Image Transfer Roller

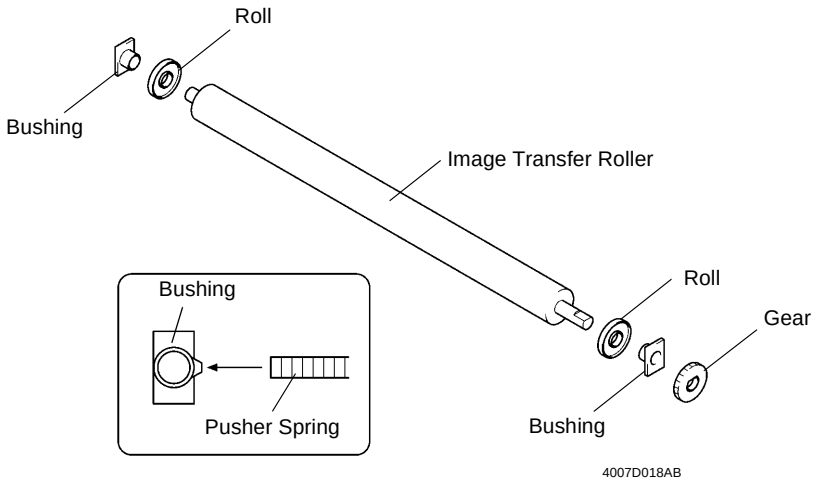

2-6. FUSING SECTION

(1) Removal of the Fusing Backup Roller

1. Thermistor hookup harness

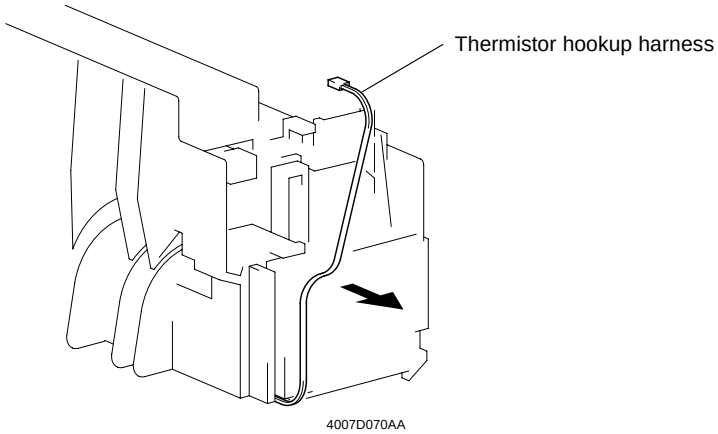

2. Lower Fusing Unit
3. Fusing Entrance Guide Plate

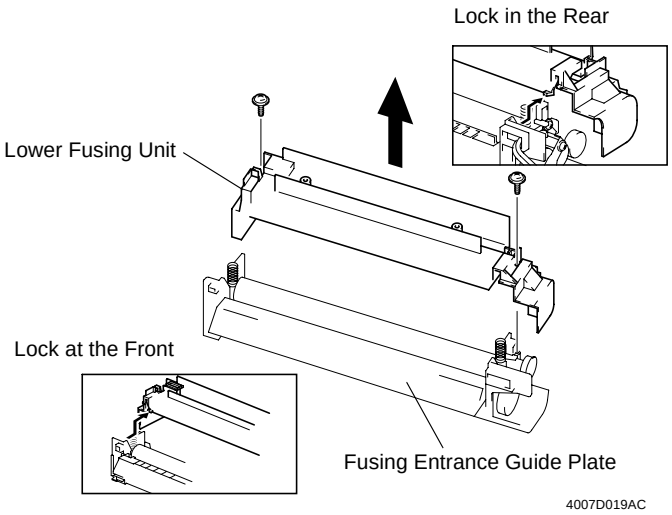

4. Pressure spring
5. Fusing Backup Roller

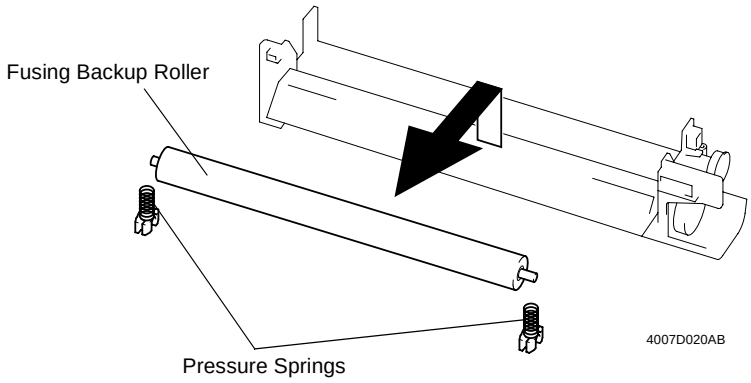

NOTE
During reinstallation, make sure that the pressure springs fit over the protrusions on the Lower Fusing Unit.

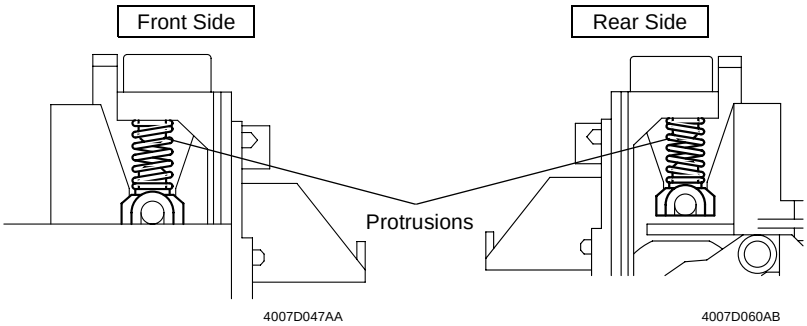

(2) Removal of the Fusing Heater Lamp

1. Terminal
2. Fusing Heater Lamp

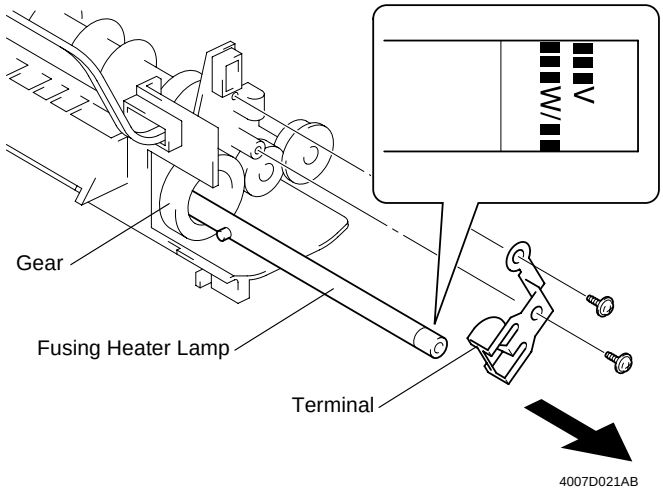

NOTE

When inserting the Fusing Heater Lamp, make sure that the end marked with the specifications is on the gear end.

(3) Removal of the Fusing Roller

1. Gear
2. Fusing Roller

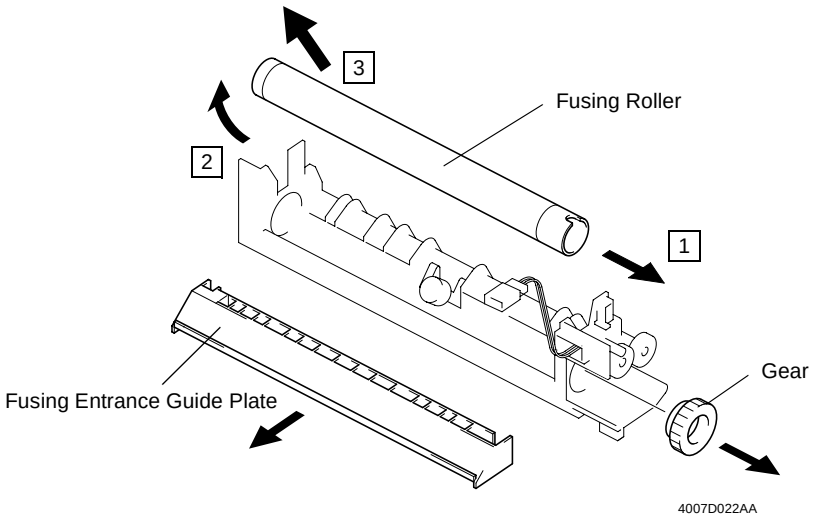

NOTES

- *When mounting the Fusing Roller, take care not to allow the Paper Separator Fingers to damage the surface of the roller.*
- *When installing the gear, make sure that the protrusion on the inner side of the gear fits into the slit on the end of the Fusing Roller.*
- *When installing the Fusing Entrance Guide Plate, fit the ground plate of the Fusing Entrance Guide Plate inside the ground plate on the Fusing Unit side.*

Where the Ground Plate is Mounted

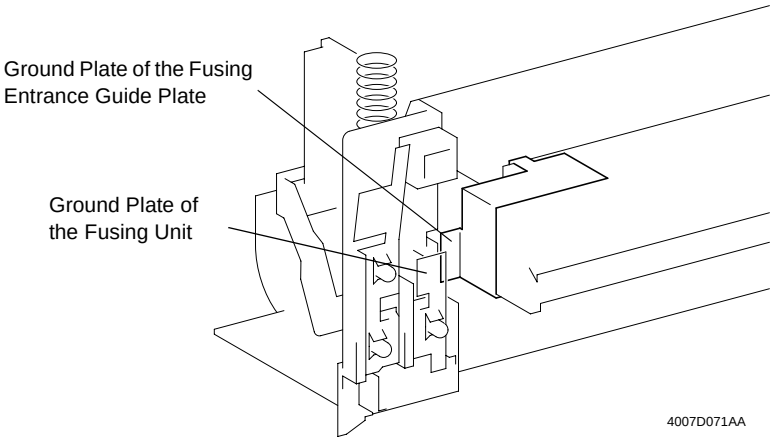

2-7. MISCELLANEOUS

(1) Removal of the Scanner and Timing Belt

Remove these parts after the Front Upper Cover, Front IR Cover, Left IR Cover, Rear IR Upper Cover, Rear Upper Cover, Rear Lower Cover, and Right IR Cover have all been removed.

1. Original Glass holding bracket
2. Original Glass

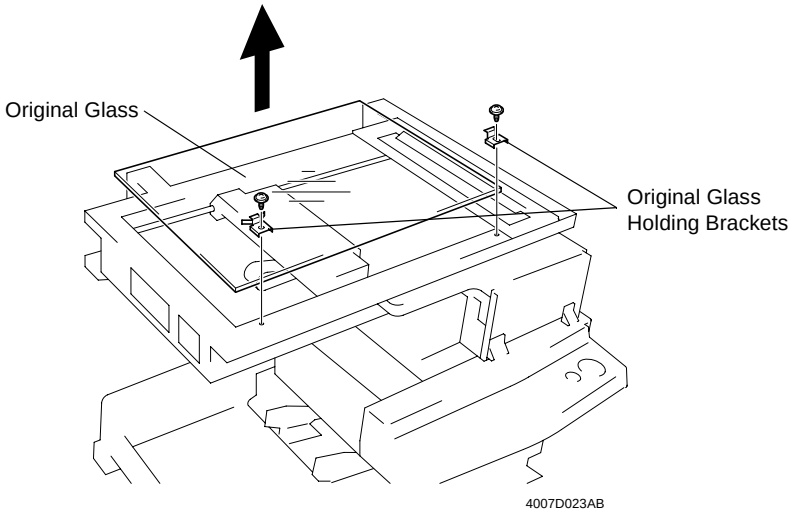

3. Timing belt pulley
4. Timing belt

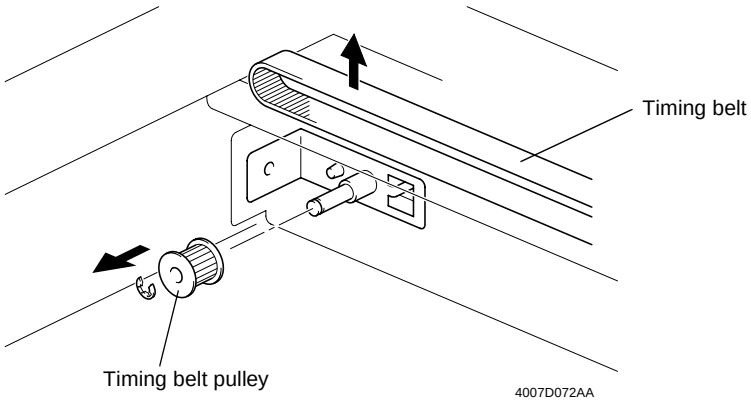

5. Scanner Rail fixing screw (on timing belt side)
6. Scanner Rail (on timing belt side)

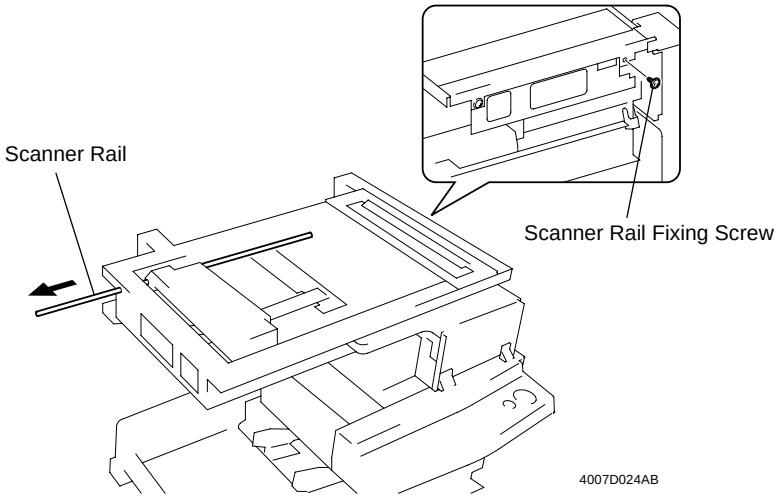

7. Scanner plate
8. Flexible harness
9. Scanner

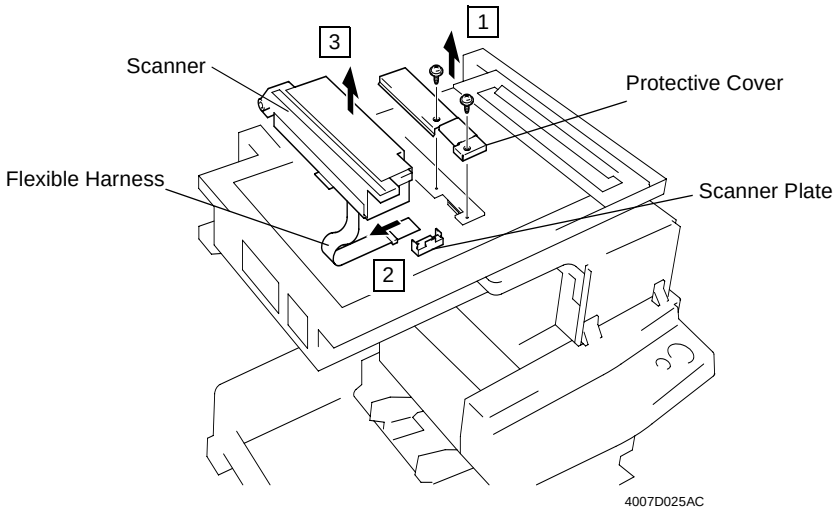

NOTE
When installing the Scanner, always connect the flexible harness first.

(2) Removal of the Scanner Motor

1. IR Unit
2. Fixing bracket
3. Scanner Motor

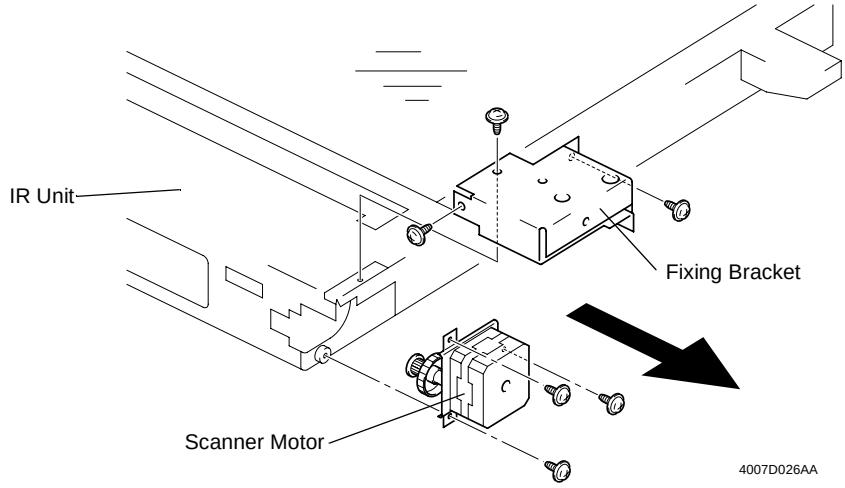

(3) Removal of the Paper Take-Up Roll

Remove the Paper Take-Up Roll after the I/C has been taken out of the copier.

1. Paper Take-Up Roll

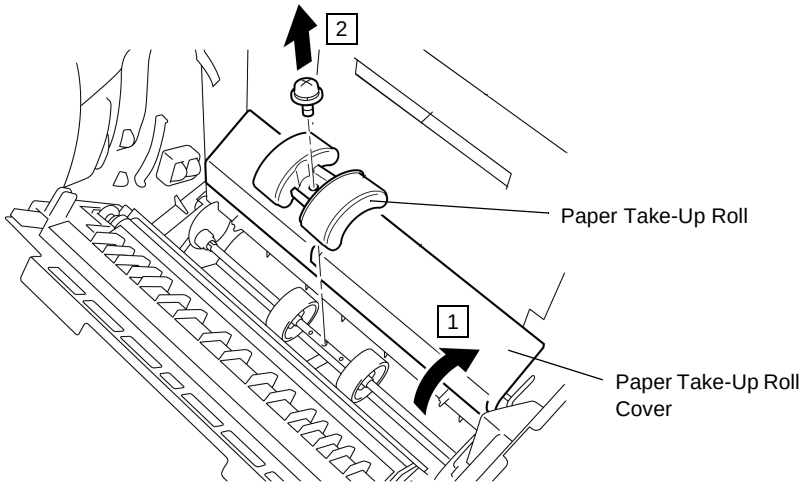

NOTE

When securing the Paper Take-Up Roll, make sure that the positioning pin on the back side of the roll fits into the hole in the shaft.

(4) Removal of the Paper Take-Up Solenoid

Remove the solenoid after the Front Lower Cover, Paper Tray, Manual Bypass Tray, Manual Bypass Tray Lower Cover, Rear Lower Cover, and Right Cover have all been removed.

1. Protective cover

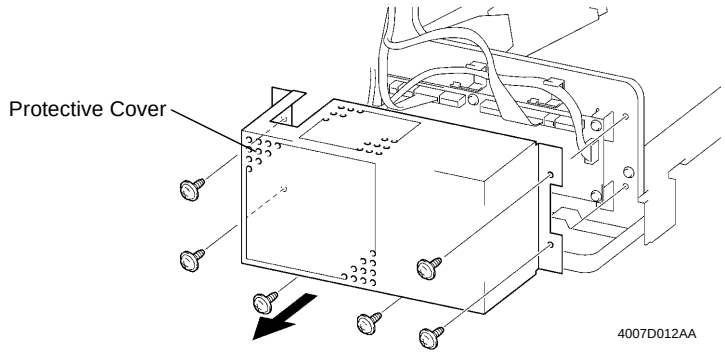

2. Print jack

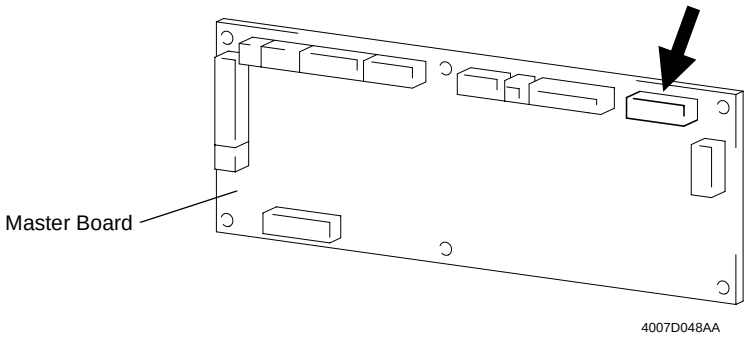

3. Paper Take-Up Solenoid hookup connector

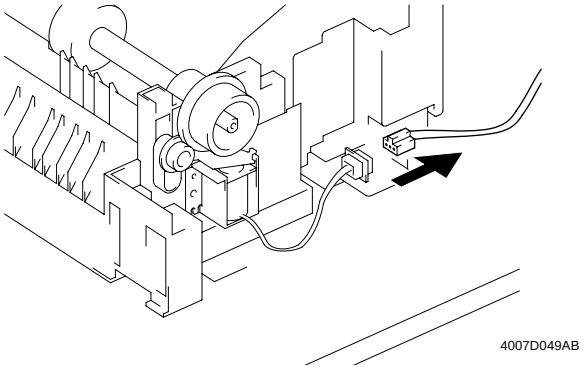

4. Base plate fixing screws

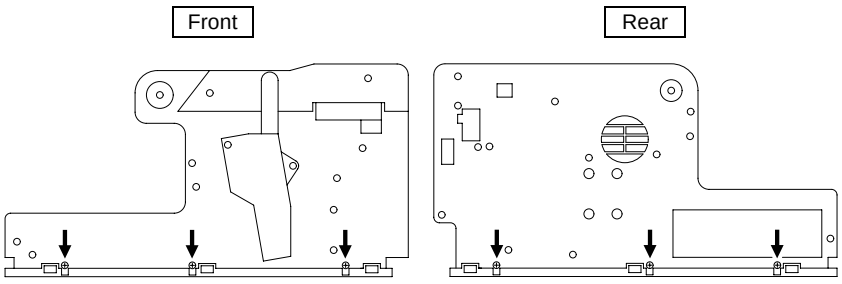

5. Base plate

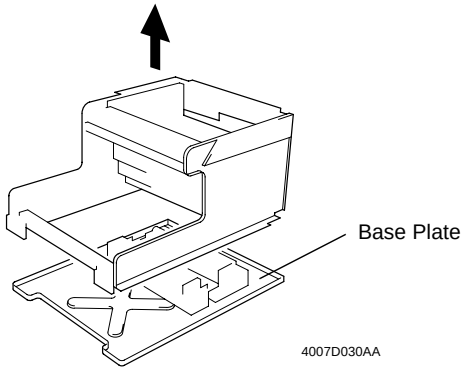

6. Paper Take-Up Solenoid

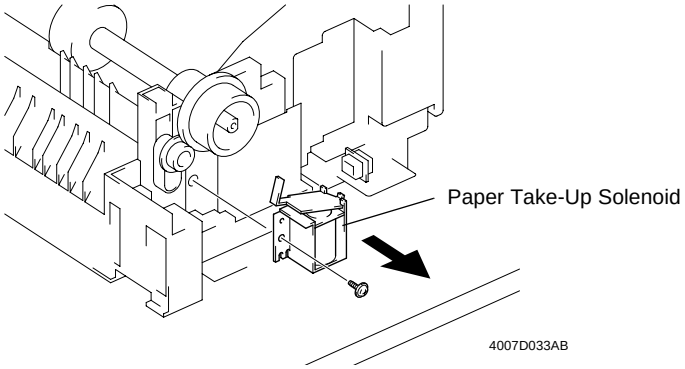

(5) Removal of the Main Motor and PH Section Cooling Fan Motor

Remove these parts after the upper half of the copier, and I/C has been removed.

1. Protective cover
2. Master Board

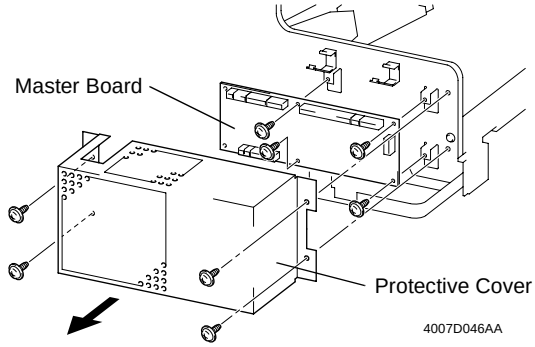

3. Base plate

☞ D-27

4. Rear side plate fixing screws (marked with black dots)
5. Gear Assy fixing screws (marked with black squares)

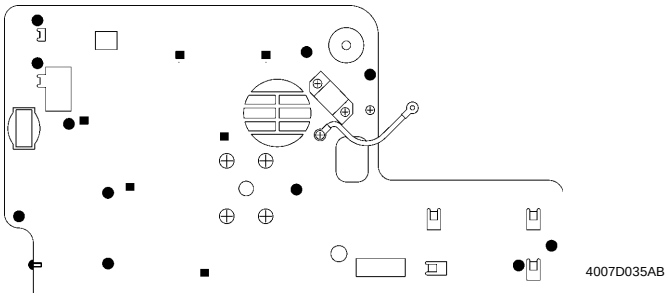

6. Rear side plate, gear assy

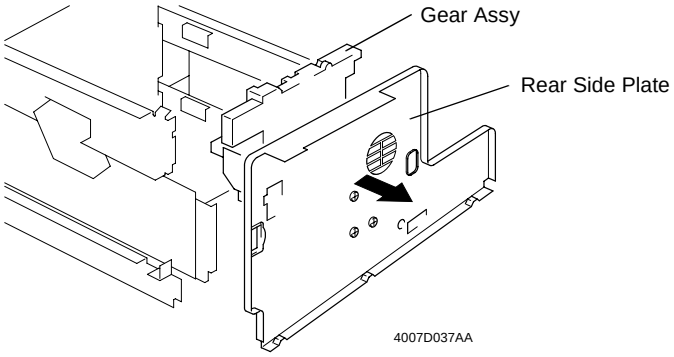

NOTE
Install the rear side plate first, then the base plate.

7. Main Motor, PH Section Cooling Fan Motor

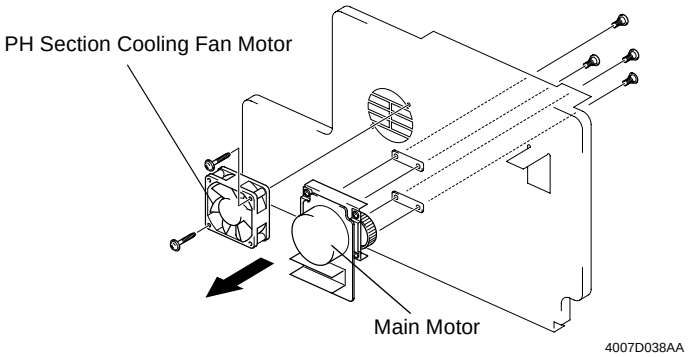

3. ADJUSTMENT

3-1. ADJUSTMENT REQUIREMENTS LIST

Adjustment Item		Requirements	Adjustment Point	Ref. Page
Registration (Paper Tray)			Control panel	
	CD	———	↑	☞ D-33
	FD	20 ± 2.0 mm	↑	☞ D-34
Zoom Ratios (Scanner)			↑	
	CD	100 ± 1.0 mm	↑	☞ D-35
	FD	200 ± 2.0 mm	↑	☞ D-36
Registration (Scanner)			↑	
	CD	———	↑	☞ D-37
	FD	20 ± 2.0 mm	↑	☞ D-38

3-2. ADJUSTMENT OF UPPER UNIT INTERLOCK SWITCH S2

1. Release and swing up the upper half of the copier and remove the Right Cover.
2. Remove the Fusing Cover.
3. Loosen the screw on the Upper Unit Interlock Switch adjusting bracket and slide it downward until it is stops.
4. Swing down the upper half of the copier into its locked position.
5. Moving the Upper Unit Interlock Switch adjusting bracket upward, find the position at which a click of the switch is heard. Then tighten the screw to secure the adjusting bracket in that position.
   [Check Method]
   When the Power Switch is turned ON, the Exposure Lamp should turn ON.

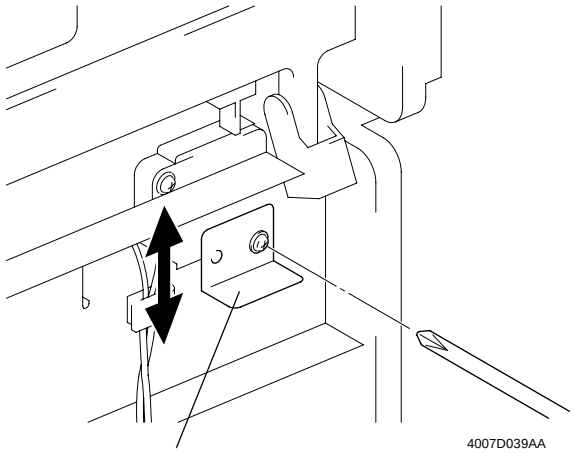

Upper Unit Interlock Switch Adjusting Bracket

3-3. ELECTRICAL/IMAGE ADJUSTMENT

(1) Entering the Tech. Rep. Mode

Procedure:
Press the following keys in this order:
Clear/Stop → Exposure Control Lighter (<) → Clear/Stop → Exposure Control Darker (>)

(2) Entering the Adjust Mode

Procedure:
1. Enter the Tech. Rep. mode.
2. Press the following keys in this order:
   1Key → 1Key → 1Key → Start key → Press the 1Key until the specific function is displayed.

(3) Producing a Test Pattern

NOTE
A test pattern is used when making the following adjustments:
- *CD registration adjustment (Paper Tray)*
- *FD registration adjustment (Paper Tray)*
- *Registration adjustment (Scanner)*
- *Zoom ratio adjustment (Scanner)*

Procedure
1. Enter the Tech. Rep. mode.
2. Press the following keys in this order to enter the function of “F5 Test Pattern 1”:
   1Key → 1Key → Start key → 1Key → 1Key → 1Key → 1Key
3. Press the Start key.

NOTE
To exit the test pattern function, press the Clear/Stop key to go back to the Basic screen.

(4) CD Registration Adjustment (Paper Tray)

Requirement

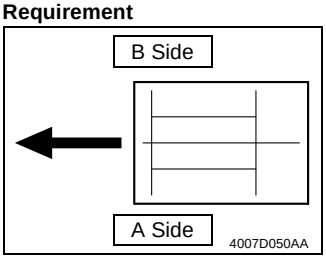

Requirement	Adjust Mode Function	Setting Range
	CD registration adjustment	43 to 57 (-3.5 to +3.5 mm)

NOTE
This adjustment must be made whenever the PH Unit is replaced.

Procedure
1. Produce a test pattern (F5: Test Pattern 1).
2. Fold the test pattern in half and make sure that the centerline on the test pattern is aligned with the crease. If it is not aligned with the crease, perform the following adjustment procedure.
3. Enter Adjust function A9.
4. Change the setting value using the 1Key or 10Key as necessary (1 step equivalent to 0.5 mm).

If the centerline deviates on the B side, increase the setting value.
If the centerline deviates on the A side, decrease the setting value.
✻ If one adjustment sequence does not bring the centerline into the required range, perform the sequence again.

5. Press the Start key to validate the setting value.

NOTE
If the Clear/Stop key is pressed to go back to the Basic screen without pressing the Start key, the setting will be restored to the original value.

(5) FD Registration Adjustment (Paper Tray)

Requirement

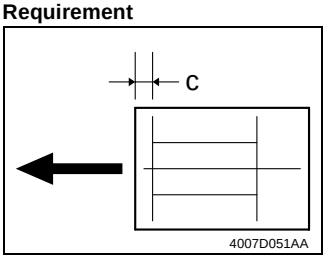

Dimension C on the test pattern produced should fall within the range specified below.

Requirement	Adjust Mode Function	Setting Range
A4C 20 ±2.0 mm	FD registration adjustment	43 to 57 (-3.5 to +3.5 mm)

NOTE
This adjustment must be made whenever the PH Unit is replaced. Should be made after the CD registration adjustment (Paper Tray) has been completed.

Procedure
1. Produce a test pattern (F5: Test Pattern 1).
2. Make sure that dimension C on the test pattern falls within the specified range. If it falls outside the specified range, perform the following adjustment procedure.
3. Enter Adjust function AA.
4. Change the setting value using the 1Key or 10Key as necessary (1 step equivalent to 0.5 mm).

If dimension C on the test pattern is longer than the specified range, decrease the setting value.
If dimension C on the test pattern is shorter than the specified range, increase the setting value.
✻ If one adjustment sequence does not bring the dimension into the required range, perform the sequence again.

5. Press the Start key to validate the setting value.

NOTE
If the Clear/Stop key is pressed to go back to the Basic screen without pressing the Start key, the setting will be restored to the original value.

(6) CD Zoom Ratio Adjustment (Scanner)

Requirement

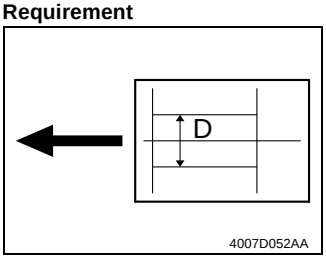

Produce a test pattern after the CD and FD registration adjustments (Paper Tray) have been made. Place this test pattern on the Original Glass and make a copy. Dimension D on the copy of the test pattern should fall within the range specified below.

Zoom Ratio	Requirement	Adjust Mode Function	Setting Range
Full size (100%)	100 ±1.0 mm	CD zoom ratio adjustment	45 to 55 (Reduced ↔ Enlarged)

NOTE
This adjustment must be made whenever the Scanner is replaced. Should be made after the CD and FD registration adjustments (Paper Tray) have been completed.

Procedure
1. Produce a test pattern (F5: Test Pattern 1).
2. Place the test pattern produced on the Original Glass and make a copy.
3. Make sure that dimension D on the copy of the test pattern falls within the specified range.
   Calculation formula: (1 – Dimension D on test pattern ÷ Dimension D on copy) × 100
   If dimension D falls outside the specified range, perform the following adjustment procedure.
4. Enter Adjust function A1.
5. Change the setting value using the 1Key or 10Key as necessary (1 step equivalent to 0.4%).

If dimension D on the copy of the test pattern is longer than the specified range, decrease the setting value.
If dimension D on the copy of the test pattern is shorter than the specified range, increase the setting value.
✻ If one adjustment sequence does not bring the dimension into the required range, perform the sequence again.

6. Press the Start key to validate the setting value.

NOTE
If the Clear/Stop key is pressed to go back to the Basic screen without pressing the Start key, the setting will be restored to the original value.

(7) FD Zoom Ratio Adjustment (Scanner)

Requirement

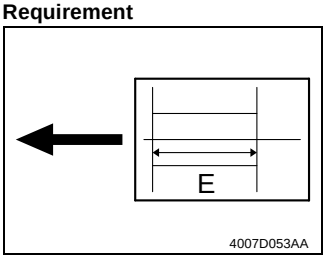

Produce a test pattern after the CD and FD registration adjustments (Paper Tray) have been made. Place this test pattern on the Original Glass and make a copy. Dimension E on the copy of the test pattern should fall within the range specified below.

Zoom Ratio	Requirement	Adjust Mode Function	Setting Range
Full size (100%)	200 ±2.0 mm	FD zoom ratio adjustment	45 to 55 (Reduced ↔ Enlarged)

NOTE
This adjustment must be made whenever the Scanner is replaced. Should be made after the CD and FD registration adjustments (Paper Tray) have been completed.

Procedure
1. Produce a test pattern (F5: Test Pattern 1).
2. Place the test pattern produced on the Original Glass and make a copy.
3. Make sure that dimension E on the copy of the test pattern falls within the specified range.
   Calculation formula: (1 – Dimension E on test pattern ÷ Dimension E on copy) × 100
   If dimension E falls outside the specified range, perform the following adjustment procedure.
4. Enter Adjust function A2.
5. Change the setting value using the 1Key or 10Key as necessary (1 step equivalent to 0.4%).

If dimension E on the copy of the test pattern is longer than the specified range, decrease the setting value.
If dimension E on the copy of the test pattern is shorter than the specified range, increase the setting value.
✻ If one adjustment sequence does not bring the dimension into the required range, perform the sequence again.

6. Press the Start key to validate the setting value.

NOTE
If the Clear/Stop key is pressed to go back to the Basic screen without pressing the Start key, the setting will be restored to the original value.

(8) CD Registration Adjustment (Scanner)

Requirement

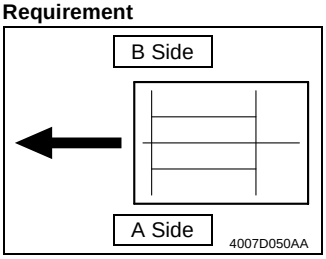

Requirement	Adjust Mode Function	Setting Range
	CD registration adjustment	40 to 60 (-5.0 to +5.0 mm)

NOTE
This adjustment must be made whenever the Scanner is replaced. Should be made after the CD and FD registration adjustments (Paper Tray), and CD zoom ratio adjustment (Scanner) have been completed.

Procedure
1. Produce a test pattern (F5: Test Pattern 1).
2. Place the test pattern produced on the Original Glass and make a copy.
3. Fold the test pattern in half and check that the centerline on the test pattern is aligned with the crease. If it is not aligned with the crease, perform the following adjustment procedure.
4. Enter Adjust function A3.
5. Change the setting value using the 1Key or 10Key as necessary (1 step equivalent to 0.5 mm).

If the centerline deviates on the B side, increase the setting value.
If the centerline deviates on the A side, decrease the setting value.
✻ If one adjustment sequence does not bring the centerline into the required range, perform the sequence again.

6. Press the Start key to validate the setting value.

NOTE
If the Clear/Stop key is pressed to go back to the Basic screen without pressing the Start key, the setting will be restored to the original value.

(9) FD Registration Adjustment (Scanner)

Requirement

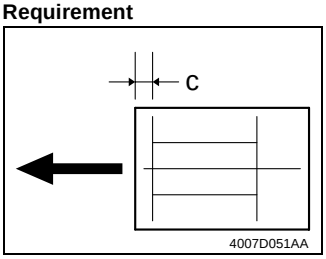

Produce a test pattern after the CD and FD registration adjustments (Paper Tray) have been made. Place this test pattern on the Original Glass and make a copy. Dimension C on the copy of the test pattern should fall within the range specified below.

Requirement	Adjust Mode Function	Setting Range
20 ±2.0 mm	FD registration adjustment	40 to 60 (-5.0 to +5.0 mm)

NOTE
This adjustment must be made whenever the Scanner is replaced. Should be made after the CD and FD registration adjustments (Paper Tray), and FD zoom ratio adjustment (Scanner) have been completed.

Procedure
1. Produce a test pattern (F5: Test Pattern 1).
2. Place the test pattern produced on the Original Glass and make a copy.
3. Make sure that dimension C on the copy of the test pattern falls within the specified range. If it falls outside the specified range, perform the following adjustment procedure.
4. Enter Adjust function A4.
5. Change the setting value using the 1Key or 10Key as necessary (1 step equivalent to 0.5 mm).

If dimension C on the copy of the test pattern is longer than the specified range, decrease the setting value.
If dimension C on the copy of the test pattern is shorter than the specified range, increase the setting value.
✻ If one adjustment sequence does not bring the dimension into the required range, perform the sequence again.

6. Press the Start key to validate the setting value.

NOTE
If the Clear/Stop key is pressed to go back to the Basic screen without pressing the Start key, the setting will be restored to the original value.

4. MISCELLANEOUS

4-1. TORSION BAR POSITION ADJUSTMENT

NOTE
When an Automatic Document Feeder or Fax Unit is mounted on the copier, the position of the torsion bar must be adjusted as detailed below.

1. Remove the Front Upper Cover and control panel.
2. Release and swing up the upper half of the copier.
3. Remove the torsion bar attachment plate.

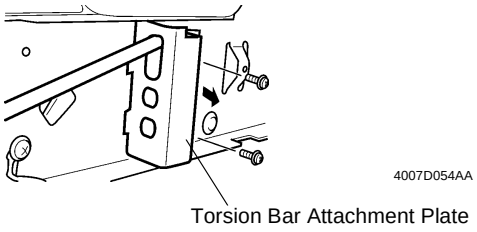

4. Change the position of the torsion bar in the attachment plate as necessary.

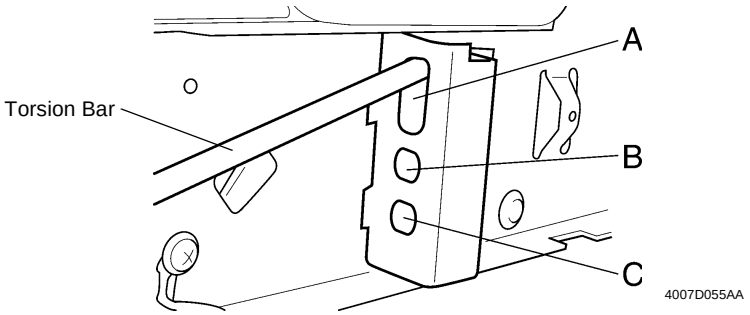

Hole	Copier Configuration
A	Factory setting or when the Original Cover is mounted When the Fax Unit is mounted
B	When the Automatic Document Feeder is mounted
C	When both the Automatic Document Feeder and Fax Unit are mounted

5. Secure the torsion bar attachment plate into position.

4-2. REMOUNTING EEPROM (U21)

NOTES

- If the Control Board has been replaced, be sure to remount EEPROM (U21) from the old to new Control Board.
- If the Control Board has been replaced and EEPROM (U21) has not been remounted, be sure to make settings and readjustments as necessary because New EEPROM (U21) contains no data in this case.

1. Remove the Control Board.
2. Remove EEPROM (U21) from the new Control Board.
3. Remove EEPROM (U21) from the old Control Board and remount it onto the new Control Board.

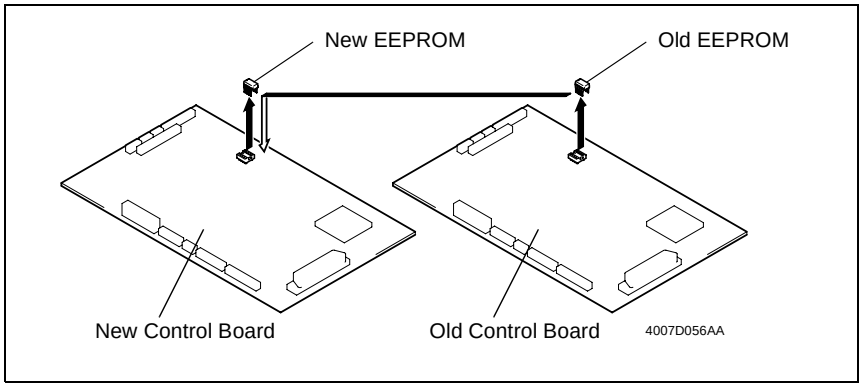

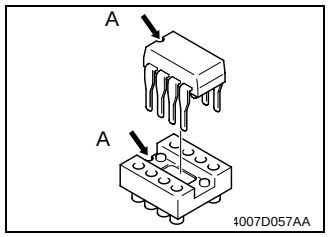

NOTE

Note the alignment notch (A) on EEPROM (U21) when mounting the IC.

SWITCHES ON PWBs, TECH. REP. SETTINGS

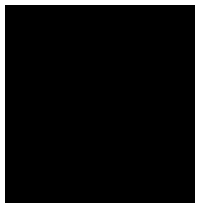

CONTENTS

1. CONTROL PANEL KEYS AND INDICATORS S-1
1-1. Control Panel Keys S-1
2. USER'S CHOICE MODE S-5
2-1. Functions Available from the User's Choice Mode S-5
2-2. User's Choice Function Setting Procedure S-5
2-3. Settings in the User's Choice Mode S-6
3. TECH. REP. MODE S-10
3-1. Tech. Rep. Mode Function Tree S-10
3-2. Tech. Rep. Mode Setting Procedure S-11
(1) Display S-11
(2) Function S-13
(3) Tech. Rep. Choice S-15
(4) Adjust S-17

1. CONTROL PANEL KEYS AND INDICATORS

1-1. Control Panel Keys

1. Start Key
- Press to start a copy cycle.

2. Clear/Stop Key
- Press to cancel a copy operation.
- Press to reset the Copies setting to “1”.
- Press to return the zoom ratio setting to 100%.
- Press for three seconds to enable the total check function.

3. 1 Key
- Use to change the values for each setting.

4. 10 Key
- Use to change the values for each setting.

5. Copies/Function Key
- Use to change the Copies setting and the Function Mode settings.

6. Zoom Key
- Press to change the zoom ratio.
- Use to select the standard zoom ratio.

7. Exposure Control Key (Darker)
- Use to manually adjust the density of the document.Image will become darker by pressing this key.

8. Auto Exposure Mode Key
- Press to select either the Auto Exposure Mode, the Manual Exposure Mode or the Photo Mode.

9. Exposure Control Key (Lighter)
- Use to manually adjust the density of the document.Image will become lighter by pressing this key.
- Press for three seconds enter the User's Choice mode.

10. Paper Select Key
- Press to select the drawer that contains the desired paper size.

Inch Areas

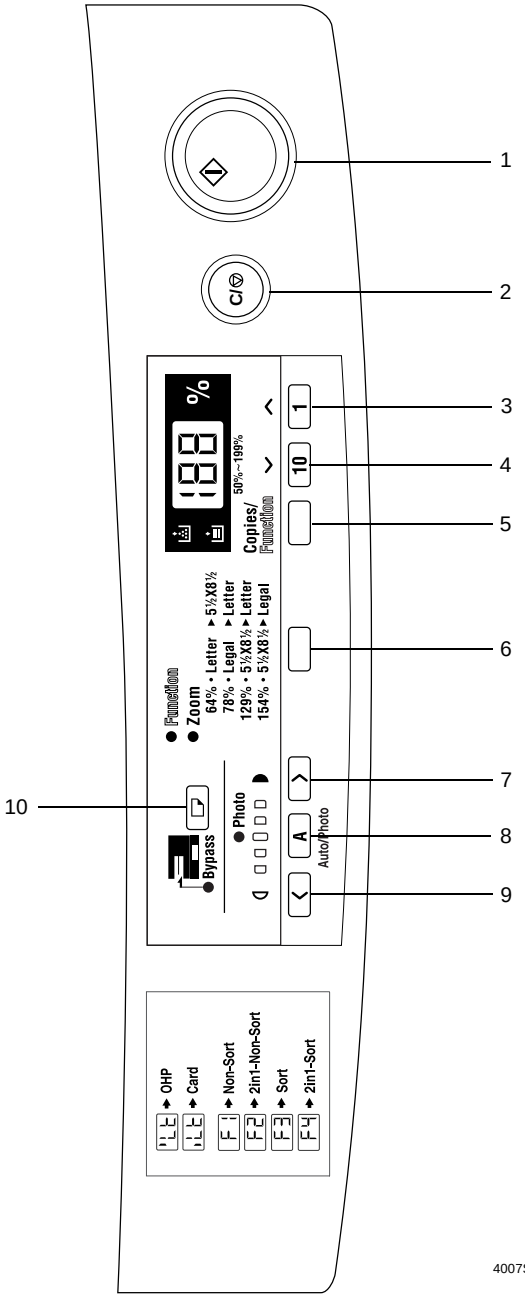
1
2
3
4
5
6
7
8
9
10
100
%
50%~199%
Copies/
Function
Function
Zoom
64% • Letter ► 5½X8½
78% • Legal ► Letter
129% • 5½X8½ ► Letter
154% • 5½X8½ ► Legal
Photo
Bypass
Auto/Photo
OHP
Card
Non-Sort
2in1-Non-Sort
Sort
2in1-Sort
F1
F2
F3
F4
4007S001EA

Metric Areas

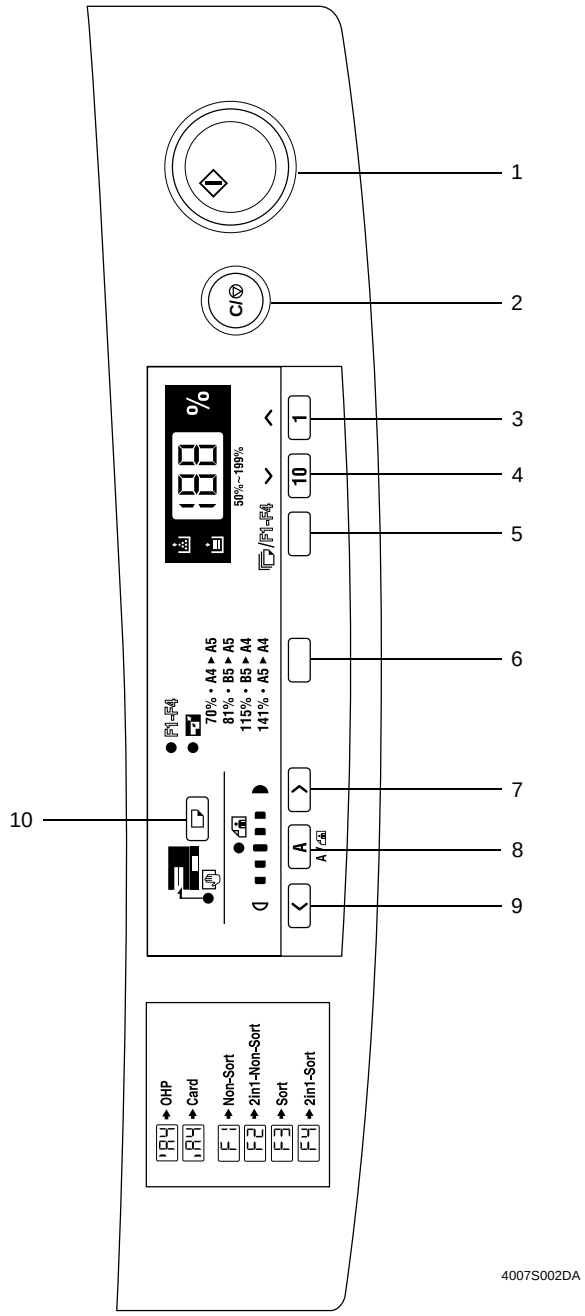

Others

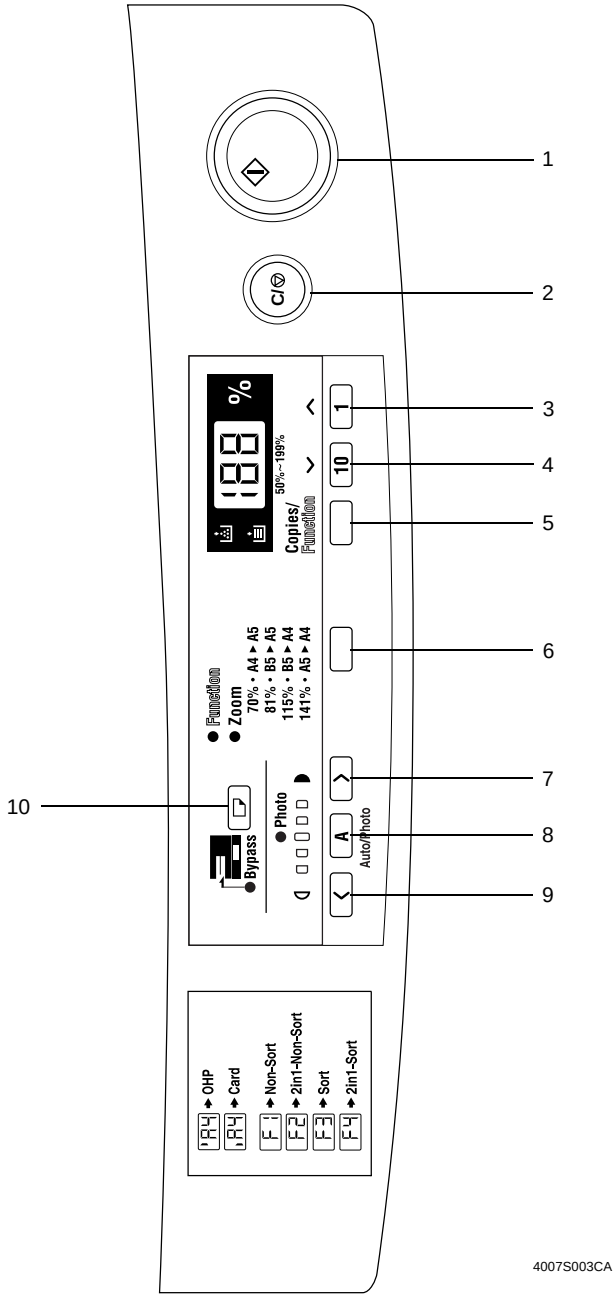
1
2
3
4
5
6
7
8
9
10
%
100
50%~199%
Copies/
Function
Function
Zoom
70% : A4 ▸ A5
81% : B5 ▸ A5
115% : B5 ▸ A4
141% : A5 ▸ A4
Photo
Bypass
Auto/Photo
OHP
Card
Non-Sort
2in1-Non-Sort
Sort
2in1-Sort
4007S003CA

2. USER'S CHOICE MODE

• User's Choice Mode is used to make various settings according to the user's needs.

2-1. Functions Available from the User's Choice Mode

Code	Function
U1	Auto Panel Reset
U2	Sleep
U3	Disable Sleep
U4	Exposure Mode Priority/Photo Mode
U5	Auto Exposure Level Priority
U6	Manual Exposure Level Priority
U7	Paper Size Select

	Code	Function
	U8	Manual Feed Input Size
✻	U9	Density (Automatic Document Feeder)
✻	U0	Function
✻	UA	Tray Priority (for Copier mode)
✻	Ub	Image Density (for Printer mode)
✻	UC	Tray Priority (for Printer mode)

✻ Functions of U9 to UC are available on the display only when the copier is equipped with the corresponding options as detailed below.
U9: Automatic Document Feeder (AF-8)
U0: Memory for Copier (16MB/32MB)
UA: Paper Feed Unit (PF-116)
Ub: Printer Controller (Pi1501)
UC: Paper Feed Unit (PF-116) and Printer Controller (Pi1501)

2-2. User's Choice Function Setting Procedure

<Setting Procedure>
1. On the copying mode screen, hold down the Exposure Control Lighter < key for about 3 sec. or more.
2. Using the 10Key and 1Key, select the appropriate choice code.
3. Press the Start key to show the current setting.
4. Using the 10Key and 1Key, select the appropriate choice data.
5. Press the Start key to validate the choice data entered.

<Exiting the Mode>
• Press the Clear/Stop key.

2-3. Settings in the User's Choice Mode

<table>
<tr><th>Choice Code.</th><th>Setting (The default is Highlighted).</th></tr>
<tr><td>U1</td><td>
<Auto panel Reset>
Select the time it takes the Auto Panel Reset function, which resets the panel settings when the set period of time elapses after a copy cycle has been completed or the last key operated, to be activated.
<table>
<tr><th>Data</th><th>Description</th><th>Data</th><th>Description</th></tr>
<tr><td>OF</td><td>Disabled</td><td>2</td><td>2min.</td></tr>
<tr><td>05</td><td>30sec.</td><td>3</td><td>3min.</td></tr>
<tr><td>1</td><td>1min.</td><td>4</td><td>4min.</td></tr>
</table>
</td></tr>
<tr><td>U2</td><td>
<Sleep>
Set the time it takes the copier to enter the Power Save mode after the copy cycle has been completed or the last key operated.
NOTE
• The choice data “OF” may be selected when “Enabled” is selected in “U3, Disable Sleep.”
<table>
<tr><td>Data</td><td>OF</td><td>1..... 15..... 120</td></tr>
<tr><td>Description</td><td>Disabled</td><td>The data value is the time in min.</td></tr>
</table>
</td></tr>
<tr><td>U3</td><td>
<Disable Sleep>
Select whether to enable the “OF” setting of Sleep.
<table>
<tr><td>Data</td><td>1</td><td>2</td></tr>
<tr><td>Description</td><td>Disabled</td><td>Enabled</td></tr>
</table>
</td></tr>
<tr><td>U4</td><td>
<Exposure Mode Priority/Photo Mode>
Select the priority exposure mode, either Text Auto Exposure, Text Manual Exposure, or Photo Manual Exposure.
<table>
<tr><th>Data</th><th>Description</th><th>Photo LED</th><th>Exposure Level LED</th></tr>
<tr><td>1</td><td>Text Auto exposure</td><td>OFF</td><td>All ON</td></tr>
<tr><td>2</td><td>Photo Manual exposure</td><td>ON</td><td>U6 default setting ON</td></tr>
<tr><td>3</td><td>Text Manual exposure</td><td>OFF</td><td>U6 default setting ON</td></tr>
</table>
</td></tr>
<tr><td>U5</td><td>
<Auto Exposure Priority>
Select the priority exposure level in the Auto Exposure mode.
<table>
<tr><td>Data</td><td>0</td><td>1</td><td>2</td></tr>
<tr><td>Description</td><td>Darker</td><td>Standard</td><td>Lighter</td></tr>
</table>
</td></tr>
</table>

<table>
<tr><th>Choice Code</th><th>Setting (The default is Highlighted).</th></tr>
<tr><td>U6</td><td>
<Manual Exposure Level Priority>
Select the priority exposure level in the Manual Exposure mode.
<table>
<tr><th>Data</th><th>Description</th><th>Exposure Level LEDs</th></tr>
<tr><td>4</td><td rowspan="4">Darker
↑</td><td>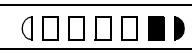</td></tr>
<tr><td>3</td><td>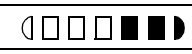</td></tr>
<tr><td>2</td><td>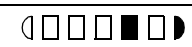</td></tr>
<tr><td>1</td><td></td></tr>
<tr><td>0</td><td>Standard</td><td></td></tr>
<tr><td>-1</td><td rowspan="4">↓</td><td></td></tr>
<tr><td>-2</td><td></td></tr>
<tr><td>-3</td><td></td></tr>
<tr><td>-4</td><td>Lighter</td><td></td></tr>
</table>
</td></tr>
<tr><td>U7</td><td>
<Paper Size Select>
Select the paper size of the Paper Tray.
- Metric Areas -
<table>
<tr><th>Data</th><th>Description</th></tr>
<tr><td>1</td><td>A4L</td></tr>
<tr><td>2</td><td>A5L</td></tr>
</table>
- Inch Areas -
<table>
<tr><th>Data</th><th>Description</th></tr>
<tr><td>1</td><td>Letter L</td></tr>
<tr><td>2</td><td>Legal L</td></tr>
<tr><td>3</td><td>Half Letter L</td></tr>
</table>
</td></tr>
<tr><td>U8</td><td>
<Manual Feed Input Size>
Set the size of the paper of a nonstandard size to be used for Manual Bypass feeding.
After the CD size has been set, press the Start key, which allows the user to set the FD size.
- CD Size -
<table>
<tr><th>Data</th><th>Description</th></tr>
<tr><td>13</td><td>128 - 134mm (5” - 5-1/4”)</td></tr>
<tr><td>14</td><td>135 - 144mm (5-1/4” - 5-3/4”)</td></tr>
<tr><td>15</td><td>145 - 154mm (5-3/4” - 6”)</td></tr>
<tr><td>16</td><td>155 - 164mm (6” - 6-1/2”)</td></tr>
<tr><td>17</td><td>165 - 174mm (6-1/2” - 6-3/4”)</td></tr>
<tr><td>18</td><td>175 - 184mm (7” - 7-1/4”)</td></tr>
<tr><td>19</td><td>185 - 194mm (7-1/4” - 7-3/4”)</td></tr>
<tr><td>20</td><td>195 - 204mm (7-3/4” - 8”)</td></tr>
<tr><td>21</td><td>205 - 216mm (8” - 8-1/4”)</td></tr>
</table>
</td></tr>
</table>

<table>
<tr><th>Choice Code</th><th>Setting (The default is Highlighted).</th></tr>
<tr><td>U8</td><td><Manual Feed Input Size>
- FD Size -
<table>
<tr><th>Data</th><th>Description</th></tr>
<tr><td>18</td><td>182 - 184mm (7-1/4”)</td></tr>
<tr><td>19</td><td>185 - 194mm (7-1/4” - 7-3/4”)</td></tr>
<tr><td>20</td><td>195 - 204mm (7-3/4” - 8”)</td></tr>
<tr><td>21</td><td>205 - 214mm (8” - 8-1/2”)</td></tr>
<tr><td>22</td><td>215 - 224mm (8-1/2” - 8-3/4”)</td></tr>
<tr><td>23</td><td>225 - 234mm (8-3/4” - 9-1/4”)</td></tr>
<tr><td>24</td><td>235 - 244mm (9-1/4” - 9-1/2”)</td></tr>
<tr><td>25</td><td>245 - 254mm (9-3/4” - 10”)</td></tr>
<tr><td>26</td><td>255 - 264mm (10” - 10-1/2”)</td></tr>
<tr><td>27</td><td>265 - 274mm (10-1/2” - 10-3/4”)</td></tr>
<tr><td>28</td><td>275 - 284mm (10-3/4” - 11-1/4”)</td></tr>
<tr><td>29</td><td>285 - 294mm (11-1/4” - 11-1/2”)</td></tr>
<tr><td>30</td><td>295 - 304mm (11-1/2” - 12”)</td></tr>
<tr><td>31</td><td>305 - 314mm (12” - 12-1/4”)</td></tr>
<tr><td>32</td><td>315 - 324mm (12-1/2” - 12-3/4”)</td></tr>
<tr><td>33</td><td>325 - 334mm (12-3/4” - 13-1/4”)</td></tr>
<tr><td>34</td><td>335 - 344mm (13-1/4” - 13-1/2”)</td></tr>
<tr><td>35</td><td>345 - 356mm (13-1/2” - 13-3/4”)</td></tr>
</table></td></tr>
<tr><td>U9</td><td><Density (Automatic Document Feeder)>
Select the copy image density level when the copier is equipped with an Automatic Document Feeder.
<table>
<tr><th>Data</th><th>Description</th></tr>
<tr><td>1</td><td>When the standard original (text original) is used.</td></tr>
<tr><td>2</td><td>For sharper reproduction of a faint original.</td></tr>
</table></td></tr>
</table>

<table>
<tr><th>Choice Code</th><th>Setting (The default is Highlighted).</th></tr>
<tr><td>U0</td><td>
<Function>
Select the priority Function mode.
NOTES:
• If the copier is not equipped with an Automatic Document Feeder, choice data of F1 and F2 only are available.
• If the copier is equipped with an Automatic Document Feeder, all of the following choice data are available.
<table>
<tr><th>Data</th><th>Description</th><th>Data</th><th>Description</th></tr>
<tr><td>F1</td><td>Non-Sort</td><td>F1</td><td>Sort</td></tr>
<tr><td>F2</td><td>2in1 Non-Sort</td><td>F4</td><td>2in1 Sort</td></tr>
</table>
✻ The default setting is “F1” if the copier is not equipped with an Automatic Document Feeder.
</td></tr>
<tr><td>UA</td><td>
<Tray Priority (for Copier mode)>
Select the priority paper source selected when the copier is turned ON.
<table>
<tr><th>Data</th><th>Description</th></tr>
<tr><td>1</td><td>Paper Tray</td></tr>
<tr><td>2</td><td>Paper Feed Unit (PF-116)</td></tr>
<tr><td>3</td><td>Paper Tray + Auto Tray Switching</td></tr>
<tr><td>4</td><td>Paper Feed Unit (PF-116) + Auto Tray Switching</td></tr>
</table>
</td></tr>
<tr><td>Ub</td><td>
<Image Density (for Printer mode)>
Select the image density level of printer outputs.
<table>
<tr><td>Data</td><td>3 2 1 0 -1 -2 -3</td></tr>
<tr><td>Description</td><td>Darker ◄——— Standard ———► Lighter</td></tr>
</table>
</td></tr>
<tr><td>UC</td><td>
<Tray Priority (for Printer mode)>
Select the priority paper source for printer outputs.
<table>
<tr><th>Data</th><th>Description</th></tr>
<tr><td>1</td><td>Auto selection</td></tr>
<tr><td>2</td><td>Paper Tray</td></tr>
<tr><td>3</td><td>Paper Feed Unit (PF-116)</td></tr>
</table>
</td></tr>
</table>

3. TECH. REP. MODE

- This mode is used by the Tech. Rep. to set, adjust, and/or program various service functions.

3-1. Tech. Rep. Mode Function Tree

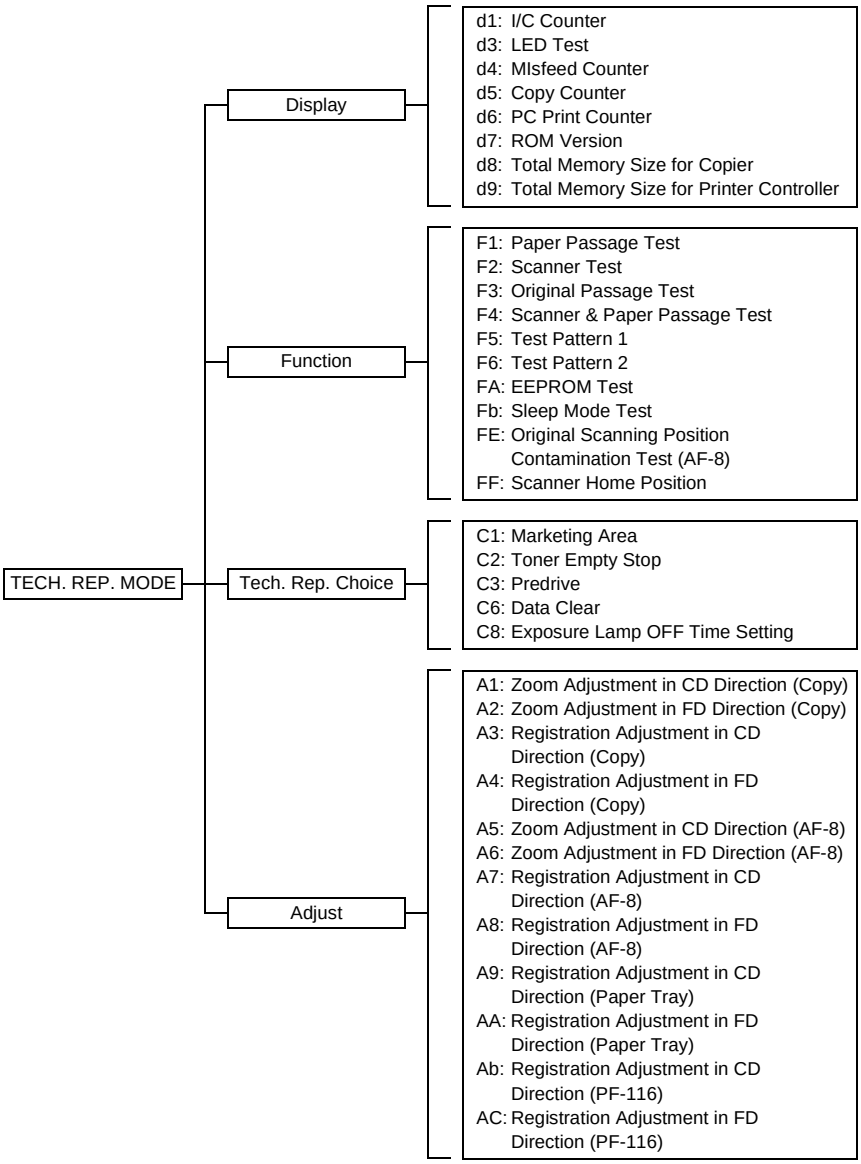

3-2. Tech. Rep. Mode Setting Procedure

<Setting Procedure>
1. Press the following keys in this order:
   Clear/Stop → Exposure Control Lighter (<) → Clear/Stop → Exposure Control Darker (>)
2. Press the 1Key until the desired Tech. Rep. sub-mode is reached. Sub-modes cycle as follows:

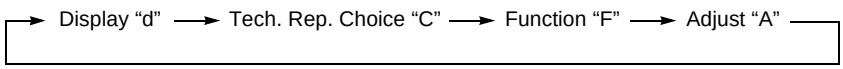

3. When the code that represents the desired sub-mode is displayed, press the Start key.

<Exiting the Mode>
- Press the Clear/Stop key.

(1) Display

- Displays the count of each of different counters and makes some checks.
- The maximum value that can be displayed for the counter is 999,999.

<Procedure>
- Press the 1Key as necessary until “d” appears on the display.
- Press the Start key to let the copier start the sequence.

<Exiting the Mode>
- Press the Clear/Stop key.

Code	Description
d1	<I/C Counter> Displays the count of the I/C counter. Two digits each are displayed on the display, cycling through all digits of the count as detailed below. E.g.: 1234 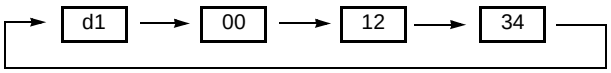
d3	<LED Test> Turns ON and flashes OFF and ON all LEDs on the control panel to check for correct operation.
d4	<Misfeed Counter> Displays the count of the misfeed counter. Two digits each are displayed on the display, cycling through all digits of the count as detailed below. E.g.: 12 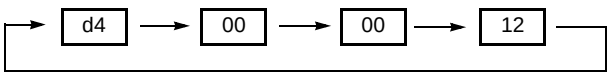

<table>
<tr><th>Code</th><th>Description</th></tr>
<tr><td>d5</td><td><Copy Counter>
Displays the count of the copy counter.
Two digits each are displayed on the display, cycling through all digits of the count as detailed below.
E.g.: 12345
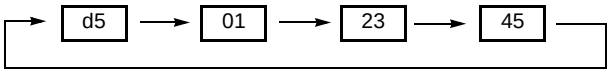
</td></tr>
<tr><td>d6</td><td><PC Print Counter>
Displays the count of the PC print counter.
Two digits each are displayed on the display, cycling through all digits of the count as detailed below.
E.g.: 12345
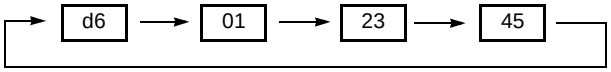
</td></tr>
<tr><td>d7</td><td><ROM Version>
Displays the ROM version.
Two digits each are displayed on the display, cycling through all digits of the ROM version number as detailed below.
E.g.: 1.00
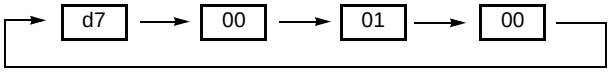
</td></tr>
<tr><td>d8</td><td><Total Memory Size for Copier>
Displays the capacity of the copier memory.
<table>
<tr><td>Display</td><td>08</td><td>24</td><td>40</td></tr>
<tr><td>Capacity (MB)</td><td>0</td><td>16</td><td>32</td></tr>
</table></td></tr>
<tr><td>d9</td><td><Total Memory Size for Printer Controller>
Displays the capacity of the printer controller memory.
<table>
<tr><td>Display</td><td>08</td><td>16</td><td>32</td></tr>
<tr><td>Capacity (MB)</td><td>0</td><td>16</td><td>32</td></tr>
</table></td></tr>
</table>

(2) Function

• Allows the Tech. Rep. to run paper passage and other tests.

<Procedure>
1. Press the 1Key as necessary until “F” appears on the display.
2. Press the Start key to let the copier start the sequence.

<Exiting the Mode>
• Press the Clear/Stop key.

Code	Description
F1	<Paper Passage Test> Checks for correct paper passage. <Procedure> 1. Select the paper source before entering the Tech. Rep. mode (when the copier is equipped with a Paper Feed Unit). 2. Press the Start key to let the copier start the paper passage sequence. 3. Press the Clear/Stop key to stop the sequence.
F2	<Scanner Test> Checks to see if the Exposure Lamp turns ON properly and the Scanner operates correctly. <Procedure> 1. Press the Start key. This turns ON the Exposure Lamp and lets the Scanner make a scan motion. 2. Press the Clear/Stop key to stop the operation.
F3	<Original Passage Test> Checks the Automatic Document Feeder for correct document passage. <Procedure> 1. Place paper on the Document Feed Tray. 2. Press the Start key to let the Automatic Document Feeder start the document take-up and feeding sequence.
F4	<Scanner & Paper Passage Test> Checks to see if the Scanner operates properly and paper is fed through the copier correctly. <Procedure> 1. Place the original on the Original Glass. 2. Press the Start key. This turns ON the Exposure Lamp and lets the Scanner make a scan motion. 3. A copy is produced. 4. Press the Clear/Stop key to stop the operation.
F5	<Test Pattern 1> Produces a test pattern for adjusting the Paper Tray for correct alignment and registration in the main scanning and sub-scanning directions.
F6	<Test Pattern 2> Produces a halftone pattern.

<table>
<tr><th>Code</th><th>Description</th></tr>
<tr><td>FA</td><td><EEPROM Test>
Checks EEPROM to determine if it is fully operational or not.
<table><tr><td>Display</td><td>00</td><td>FF</td></tr><tr><td>Description</td><td>OK</td><td>NG</td></tr></table></td></tr>
<tr><td>Fb</td><td><Sleep Mode>
Carries out a test for Sleep function.</td></tr>
<tr><td>FE</td><td><Original Scanning Position Contamination Test (AF-8)>
Checks the Automatic Document Feeder original scanning position (Original Glass) for contamination.
<Procedure>
1. Place A4 blank paper on the original scanning part.
2. Press the Start key to let the copier produce a copy.
3. Check the copy for possible contamination.</td></tr>
<tr><td>FF</td><td><Scanner Home Position>
Moves the Scanner to its home position.
Used to lock the Scanner in position when the copier is to be moved.</td></tr>
</table>

(3) Tech. Rep. Choice

• Allows the Tech. Rep. to make the settings for the various service functions.

<Procedure>
1. Press the 1Key as necessary to select the desired Tech. Rep. Choice code.
2. Press the Start key to validate the choice code.
3. Using the 10Key and 1Key, select the choice data.
4. Press the Start key to validate the choice data setting (C1 to C3).

<Exiting the Mode>
• Press the Clear/Stop key.

<table>
<tr><th>Choice Code</th><th>Setting (The default is Highlighted).</th></tr>
<tr><td>C1</td><td><Marketing Area>
Select the display options for paper sizes and fixed zoom ratios according to the applicable marketing areas.
<table>
<tr><td>Data</td><td>0</td><td>1</td></tr>
<tr><td>Description</td><td>Metric areas</td><td>Inch areas</td></tr>
</table>
Default: 0 (Metric areas)/1 (Inch areas)</td></tr>
<tr><td>C2</td><td><Toner Empty Stop>
Select whether or not to inhibit the initiation of a new copy cycle after a toner-empty condition has been detected.
<table>
<tr><td>Data</td><td>0</td><td>1</td></tr>
<tr><td>Description</td><td>Copying permitted</td><td>Copying inhibited</td></tr>
</table></td></tr>
<tr><td>C3</td><td><Predrive>
Select whether or not to stop predrive of the Fusing Rollers when the Start key is pressed.
<table>
<tr><td>Data</td><td>0</td><td>1</td></tr>
<tr><td>Description</td><td>Predrive disabled</td><td>Predrive enabled</td></tr>
</table></td></tr>
</table>

<table>
<tr><th>Choice Code</th><th>Setting (The default is Highlighted).</th></tr>
<tr><td>C6</td><td>
<Data Clear>
Use to clear the counters and initialize the various types of setting data.
<Procedure>

Using the 10Key and 1Key, select the desired function.
Press the Start key to validate the selected function (counter or setting data).
Turn OFF and ON the Power Switch. (This completes the clearing of the data.)

NOTES

“9” or “A” can be selected when the Auto Exposure Mode key is pressed.
“A” is selected when clearing all counters at once (C6-1 to -7).

<table>
<tr><th>Data</th><th>Description</th><th>Data</th><th>Description</th></tr>
<tr><td>0</td><td>None</td><td>7</td><td>PM counter</td></tr>
<tr><td>1</td><td>I/C counter</td><td>8</td><td>Use’s/Tech. Rep. Choice</td></tr>
<tr><td>4</td><td>Misfeed counter</td><td>9</td><td>Adjust</td></tr>
<tr><td>5</td><td>Copy counter</td><td>A</td><td>All counters</td></tr>
<tr><td>6</td><td>PC print counter</td><td></td><td></td></tr>
</table>
✻ Be sure to clear the I/C counters “C6-1” when I/C is replaced.
</td></tr>
<tr><td>C8</td><td>
<Exposure Lamp OFF Time Setting>
Select the time it takes the Exposure Lamp to turn OFF after a copy cycle has been completed.
<table>
<tr><td>Data</td><td>0</td><td>1</td><td>2</td></tr>
<tr><td>Description</td><td>30 sec.</td><td>20 sec.</td><td>3 min.</td></tr>
</table>
</td></tr>
</table>

(4) Adjust

- Used for adjustments to be made before shipment at the factory.

<Procedure>
1. Press the 1Key as necessary to select the desired Adjust code.
2. Press the Start key to validate the Adjust code. At the same time, currently set data is displayed.
3. Using the 10Key and 1Key, change the data.
4. Press the Start key to validate the data setting.

<Exiting the Mode>
- Press the Clear/Stop key.

Adjust Code	Setting (The default is **Highlighted**).
A1	<Zoom Adjustment in CD Direction (Copy)> Adjust the zoom ratio in the CD direction on the IR side (for copies). Data: 45 ..... **50** ..... 55 Description: Smaller ◄——► Greater
A2	<Zoom Adjustment in FD Direction (Copy)> Adjust the zoom ratio in the FD direction on the IR side (for copies). Data: 45 ..... **50** ..... 55 Description: Smaller ◄——► Greater
A3	<Registration Adjustment in CD Direction (Copy)> Adjust registration in the CD direction on the IR side (for copies). Data: 40 ..... **50** ..... 60 Description: -5.0mm ◄—— ±0 ——► +5.0mm
A4	<Registration Adjustment in FD Direction (Copy)> Adjust registration in the FD direction on the IR side (for copies). Data: 46 ..... **50** ..... 60 Description: -3.0mm ◄—— ±0 ——► +5.0mm
A5	<Zoom Adjustment in CD Direction (AF-8)> Adjust the zoom ratio in the CD direction on the IR side (when the Automatic Document Feeder is used). Data: 45 ..... **50** ..... 55 Description: Smaller ◄——► Greater

Adjust Code	Setting (The default is **Highlighted**).
A6	<Zoom Adjustment in FD Direction (AF-8)> Adjust the zoom ratio in the FD direction on the IR side (when the Automatic Document Feeder is used). Data: 45 ..... **50** ..... 55 Description: Smaller ◄——► Greater
A7	<Registration Adjustment in CD Direction (AF-8)> Adjust registration in the CD direction on the IR side (when the Automatic Document Feeder is used). Data: 40 ..... **50** ..... 60 Description: -5.0mm ◄—— ±0 ——► +5.0mm
A8	<Registration Adjustment in FD Direction (AF-8)> Adjust registration in the FD direction on the IR side (when the Automatic Document Feeder is used). Data: 40 ..... **50** ..... 60 Description: -5.0mm ◄—— ±0 ——► +5.0mm
A9	<Registration Adjustment in CD Direction (Paper Tray)> Adjust registration in the CD direction on the engine side (when the Paper Tray is used). Data: 43 ..... **50** ..... 57 Description: -3.5mm ◄—— ±0 ——► +3.5mm
AA	<Registration Adjustment in FD Direction (Paper Tray)> Adjust registration in the FD direction on the engine side (when the Paper Tray is used). Data: 43 ..... **50** ..... 57 Description: -3.5mm ◄—— ±0 ——► +3.5mm
Ab	<Registration Adjustment in CD Direction (PF-116)> Adjust registration in the CD direction on the engine side (when the Paper Feed Unit is used). Data: 43 ..... **50** ..... 57 Description: -3.5mm ◄—— ±0 ——► +3.5mm
AC	<Registration Adjustment in FD Direction (PF-116)> Adjust registration in the FD direction on the engine side (when the Paper Feed Unit is used). Data: 43 ..... **50** ..... 57 Description: -3.5mm ◄—— ±0 ——► +3.5mm

TROUBLESHOOTING

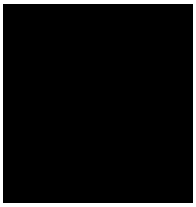

CONTENTS

1. INTRODUCTION T-1
1-1. Reading the Text T-1
2. PAPER TRANSPORT FAILURE T-2
2-1. Paper Misfeed T-2
2-2. Size Error T-2
2-3. Misfeed Detection Sensor Layout T-3
2-4. Types of Misfeed Detection and Detection Timings T-3
2-5. Misfeed Clearing Procedures T-4
(1) Copier/Manual Bypass Paper Take-Up Misfeed T-4
(2) Transport Misfeed T-5
(3) Exit Misfeed T-6
(4) PF-116 Paper Take-Up Misfeed T-7
3. MALFUNCTIONS T-8
3-1. Detection Timing Classified by Malfunction Code T-8
3-2. Troubleshooting Procedures T-10
(1) C0000: Main Motor's Failure to Turn T-10
(2) C0045: Fusing Section Cooling Fan Motor's Failure to Turn
C0049: PH Section Cooling Fan Motor's Failure to Turn T-11
(3) C0200: HV Output Failure T-12
(4) C0500: Warm-up Failure
C0510: Abnormally Low Fusing Temperature
C0520: Abnormally High Fusing Temperature T-13
(5) C0650: Scanner Motor's Failure to Turn, Scanner Home Position
Sensor Malfunction T-14
(6) C14A3: Exposure Lamp Malfunction T-15
(7) C1200: System Memory Failure
C1300: Polygon Motor Malfunction
C133B: Option Communications Error
C13F0: SOS Detection Failure
C1468: Hardware (EEPROM) Malfunction T-16
(8) Power Failure T-17
4. IMAGE FAILURE T-18
4-1. Image Failure Troubleshooting T-18
4-2. Initial Checks T-18
4-3. Troubleshooting Procedures Classified by Image Failure T-19
(1) Blank copy T-20
(2) Black copy T-20
(3) Low image density T-21
(4) Foggy background T-21
(5) Black streaks or bands T-22
(6) Black spots T-22
(7) Blank streaks or bands T-23
(8) Void areas T-23
(9) Smear on back T-24
(10) Uneven image density T-24
(11) Gradation reproduction failure T-25

(12) Rough image T-25
(13) Periodically uneven image T-26

1. INTRODUCTION

1-1. Reading the Text

1. The paper transport failure troubleshooting procedures are given according to the symptom. First, identify the location of the paper is present and start the procedure for that particular location. For malfunction troubleshooting, start with step 1 and onward.
2. Make checks in the numerical order of steps and, if an item is checked okay, go to the next step.

Pattern 1

Step	Check	Result	Action
1	~	YES	~
2		↑	

Go to step 2 if you answered No.

Pattern 2

Step	Check	Result	Action
1	~	YES	~
		NO	~
2			↑

Go to step 2 if it checks okay.

2. PAPER TRANSPORT FAILURE

2-1. Paper Misfeed

When a paper misfeed occurs, the display shows both the misfeed location and paper location.

Lit	Misfeed/Paper Location	Action Ref. Item	OP
PC	Copier paper take-up	2-5. (1)	
	Manual bypass paper take-up	2-5. (1)	
	PF-116 paper take-up	2-5. (4)	✻
J2	Transport	2-5. (2)	
J3	Exit	2-5. (3)	
J8	AF-8	See the relevant option service manual.	✻

✻ When the option is mounted.

<Resetting misfeed display>

Misfeed in the copier	Open the relevant door, remove the misfeed and paper left inside, and close the door.
Misfeed in the option	

2-2. Size Error

When a size error occurs, the display gives a warning code.

Warning Code	Size Error
H2	The paper size setting on the paper source does not match the size of the paper actually loaded.

<Resetting error display>
Press the Clear/Stop key.

<Causes of a size error>
- Wrong paper size setting is made on the paper source.
- User loads paper of a wrong size in the paper source.
- Double feeding of paper occurs.

2-3. Misfeed Detection Sensor Layout

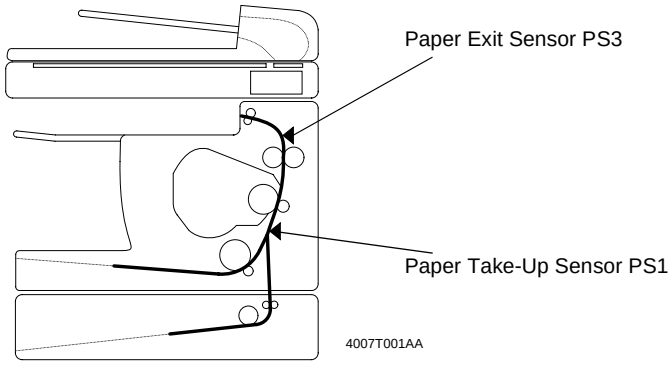

2-4. Types of Misfeed Detection and Detection Timings

- The following lists the types of misfeed detection and detection timings for different misfeed locations within the copier.
- The symbols “L” (for the leading edge) and “T” (for the trailing edge) given in ( ) indicate the particular edge of the paper detected by the sensor.

NOTE
For the types of misfeed detection and detection timings of options, see the relevant option service manual.

<Copier/Manual Bypass Paper Take-Up Misfeed>

Type	Detection Start	Detection
Paper take-up failure detection	Paper Take-Up Solenoid energized	Paper Take-Up Sensor (L)

<Transport Misfeed>

Type	Detection Start	Detection
Trailing edge detection by Paper Take-Up Sensor	Paper Take-Up Sensor (L)	Paper Take-Up Sensor (T)
Leading edge detection by Paper Exit Sensor	Paper Take-Up Sensor (L)	Paper Exit Sensor (L)

<Exit Misfeed>

Type	Detection Start	Detection
Trailing edge detection by Paper Exit Sensor	Paper Take-Up Sensor (T)	Paper Exit Sensor (T)

<Size Error>

Type	Detection Start	Detection
Size error detection	Paper Take-Up Sensor (L)	Paper length calculated based on the time it takes Paper Take-Up Sensor to detect (T).

2-5. Misfeed Clearing Procedures

(1) Copier/Manual Bypass Paper Take-Up Misfeed

Relevant Electrical Parts	
Paper Take-Up Sensor PS1 Paper Take-Up Solenoid SL1	Master Board PWB-A

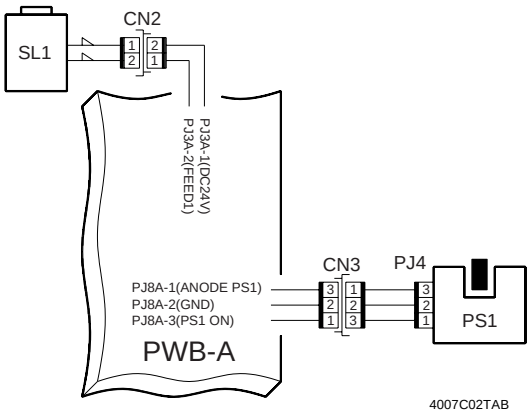

Copier/Manual Bypass Paper Take-Up Misfeed Clearing Procedure
- Paper is not taken up at all.

Step	Check	Result	Action
1	Paper meets product specifications.	NO	Change paper.
2	Paper is curled, wavy, or damp.	YES	Change paper. Advise user on correct paper storage.
3	Paper Take-Up Roll is deformed, worn, or has paper dust.	YES	Clean or change.
4	Paper Take-Up Solenoid operation: the voltage across PJ3A-2 on the Master Board and GND is DC24 V (solenoid deenergized) and DC0 V (instantaneously) (solenoid energized) when the Start key is pressed.	YES	Change solenoid.
		NO	Change Master Board.
5	Paper Take-Up Sensor operation: the voltage across PJ8A-3 on the Master Board and GND is DC5 V (sensor unblocked) and DC0 V (sensor blocked).	YES	Change Master Board.
		NO	Correct actuator. Change sensor.

(2) Transport Misfeed

Relevant Electrical Parts	
Paper Take-Up Sensor PS1 Paper Exit Sensor PS3	Master Board PWB-A

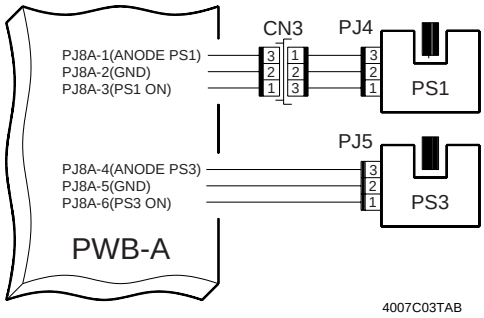

Transport Misfeed Clearing Procedure

- Paper has stopped near the PC Drum.

Step	Check	Result	Action
1	Transport Roller is dirty, deformed, or worn.	YES	Clean or change.
2	Pre-Image Transfer Guide Plate is dirty or deformed.	YES	Clean or change.
3	Image Transfer Roller is dirty, deformed, or worn.	YES	Clean or change.
4	PC Drum Paper Separator Fingers are dirty or deformed.	YES	Clean. Or, change I/C.

- Paper has stopped at the Fusing Unit.

Step	Check	Result	Action
1	Fusing Guide Plate is dirty or deformed.	YES	Clean or change.
2	Fusing Roller is dirty, deformed, or worn.	YES	Clean or change.
3	Fusing Roller Paper Separator Fingers are dirty, deformed, or worn.	YES	Clean, correct, or change.
4	Paper Exit Sensor operation: the voltage across PJ8A-6 on the Master Board and GND is DC0 V (sensor unblocked) and DC5 V (sensor blocked).	YES	Change Master Board.
		NO	Correct actuator. Change sensor.

(3) Exit Misfeed

Relevant Electrical Parts	
Paper Exit Sensor PS3	Master Board PWB-A

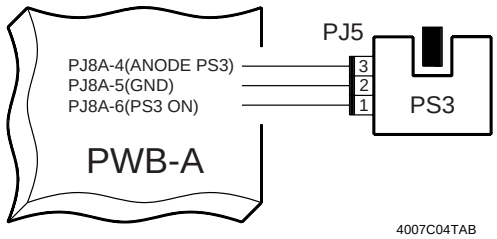

Exit Misfeed Clearing Procedure
- Paper has stopped at the exit section.

Step	Check	Result	Action
1	Paper Exit Roller rotation	NO	Correct drive coupling.
2	Paper Exit Roller is dirty, deformed, or worn.	YES	Clean or change.
3	Paper Exit Sensor operation: the voltage across PJ8A-6 on the Master Board and GND is DC0 V (sensor unblocked) and DC5 V (sensor blocked).	YES	Change Master Board.
		NO	Correct actuator. Change sensor.

(4) PF-116 Paper Take-Up Misfeed

Relevant Electrical Parts	
Paper Take-Up Sensor PS1 Paper Take-Up Solenoid SL5	Master Board PWB-A

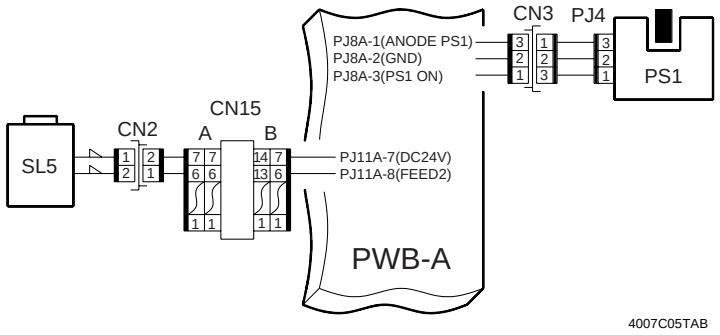

PF-116 Paper Take-Up Misfeed Clearing Procedure

- Paper is not taken up at all.

Step	Check	Result	Action
1	Paper meets product specifications.	NO	Change paper.
2	Paper is curled, wavy, or damp.	YES	Change paper. Advise user on correct paper storage.
3	Paper Take-Up Roll is deformed, worn, or has paper dust.	YES	Clean or change.
4	Paper Transport Roller is deformed, worn, or has paper dust.	YES	Clean or change.
5	Paper Take-Up Solenoid operation: the voltage across PJ11A-8 on the Master Board and GND is DC24 V (solenoid deenergized) and DC0 V (instantaneously) (solenoid energized) when the Start key is pressed.	YES	Change solenoid.
		NO	Change Master Board.
6	Paper Take-Up Sensor operation: the voltage across PJ8A-3 on the Master Board and GND is DC5 V (sensor unblocked) and DC0 V (sensor blocked).	YES	Change Master Board.
		NO	Correct actuator. Change sensor.

3. MALFUNCTIONS

The copier's CPU is equipped with a self-diagnostic function that, on detecting a malfunction, gives the corresponding malfunction code on the display.

Resetting a Malfunction
- *Turn OFF and then ON the power switch.*

3-1. Detection Timing Classified by Malfunction Code

Code	Description	Detection Timing
C0000	Main Motor's failure to turn	• The Lock signal does not go LOW within 1 s after the motor has been energized. • The Lock signal remains HIGH for continuous 0.1 s or more while the motor remains energized.
C0045	Fusing Section Cooling Fan Motor's failure to turn	A voltage of 0.3 V or less is detected for a continuous 1 s period while the motor remains energized.
C0049	PH Section Cooling Fan Motor's failure to turn	A voltage of 0.35 V or less is detected for a continuous 0.5 s period while the motor remains energized.
C0200	HV output failure	• The drum charge monitor voltage is lower than 4.5 V when the power switch is turned ON. • The drum charge monitor voltage remains 4.5 V or more when the drum charge output is turned ON. • The image transfer monitor voltage is 0.5 V or more immediately before the image transfer output is turned ON. • The image transfer monitor voltage does not increase 0.5 V or more within 40 ms after the image transfer output is turned ON.
C0500	Warm-up failure	• During the period from 12 s to 30 s after the start of the warm-up cycle, a condition of small temperature difference from the temperature at the start of the warm-up cycle is detected for a 50 ms period. • The temperature detected by the Thermistor does not reach the set level within 120 s after the start of the warm-up cycle.
C0510	Abnormally low fusing temperature	• The temperature detected by the Thermistor remains lower than 94 °C for a continuous 50 ms period while the copier is in the standby state. • The temperature detected by the Thermistor remains lower than 110 °C for a continuous 50 ms period during a copy cycle.
C0520	Abnormally high fusing temperature	The temperature detected by the Thermistor remains higher than 240 °C for a continuous 50 ms period while fusing temperature control is in progress.
C0650	Scanner Motor's failure to turn, Scanner Home Position Sensor malfunction	The Scanner Home Position Sensor is not activated within a given period of time after the Scanner Motor has been energized.

Code	Description	Detection Timing
C1200	System memory failure	A memory test error is detected during the power-on initialization procedure.
C1300	Polygon Motor malfunction	• During the period 6 s after the Polygon Motor has been energized, a cluster of 56 or more SOS signals output for a 20 ms period is detected five consecutive times. • After the lapse of 6 s after the Polygon Motor has been energized, a cluster of below 43 or above 56 SOS signals output for a 20 ms period is detected five consecutive times. • No SOS signal is detected during the period from the start of laser emission to the deenergization of the Polygon Motor.
C13F0	SOS detection failure	
C133B	Option communications error	The Controller Board is not detected within 5 s after the start of a print cycle.
C1468	Hardware (EEPROM) malfunction	An EEPROM read/write error occurs during the power-on initialization procedure.
C14A3	Exposure Lamp malfunction	The intensity level of the Exposure Lamp does not stabilize within a given period of time.

3-2. Troubleshooting Procedures

(1) C0000: Main Motor's Failure to Turn

Relevant Electrical Parts	
Main Motor M1	Master Board PWB-A

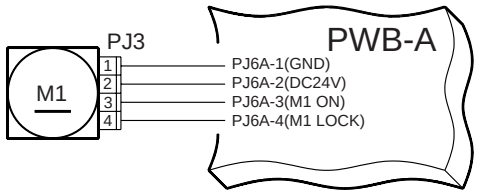

4007C06TAB

C0000

Step	Check	Result	Action
1	Main Motor turns after the malfunction has been reset.	NO	Correct drive.
2	Main Motor operation: the voltage across PJ6A-3 on the Master Board and GND is DC5 V (motor deenergized) and DC0 V (motor energized) after the malfunction has been reset.	NO	Change Master Board.
3	The voltage across PJ6A-4 on the Master Board and GND is DC5 V (motor deenergized) and DC0 V (motor energized) after the malfunction has been reset.	YES	Change Master Board.
		NO	Change motor.

(2) C0045: Fusing Section Cooling Fan Motor's Failure to Turn
C0049: PH Section Cooling Fan Motor's Failure to Turn

Relevant Electrical Parts	
Fusing Section Cooling Fan Motor M3 PH Section Cooling Fan Motor M5	Power Supply Board PU1 Master Board PWB-A

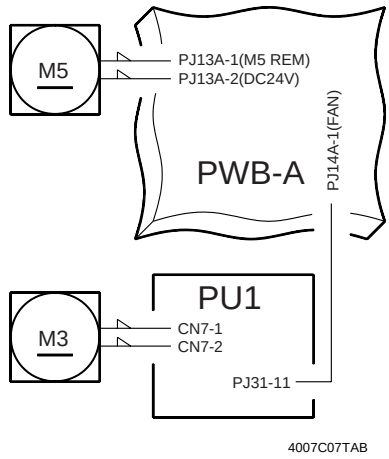

C0045

Step	Check	Result	Action
1	Fusing Section Cooling Fan Motor operation: the voltage across CN7-2 on the Power Supply Board and GND is DC24 V after the malfunction has been reset.	NO	Change Power Supply Board.
2	Fusing Section Cooling Fan Motor operation: the voltage across CN7-1 on the Power Supply Board and GND is DC1.2 V (during high-speed rotation) and DC12 V (during low-speed rotation) after the malfunction has been reset.	YES	Change motor.
		NO	Change Power Supply Board. Change Master Board.

C0049

Step	Check	Result	Action
1	PH Section Cooling Fan Motor operation: the voltage across PJ13A-2 on the Master Board and GND is DC24 V after the malfunction has been reset.	NO	Change Master Board.
2	PH Section Cooling Fan Motor operation: the voltage across PJ13A-1 on the Master Board and GND is DC1 V (motor energized) and DC24 V (motor deenergized) after the malfunction has been reset.	YES	Change motor.
		NO	Change Master Board.

(3) C0200: HV Output Failure

Relevant Electrical Parts	
High Voltage Unit HV1	Master Board PWB-A

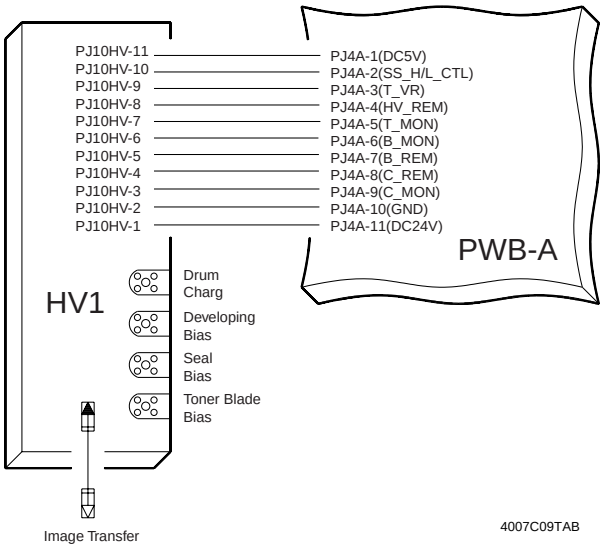

C0200

Step	Check	Result	Action
1	High Voltage Unit operation: the voltage across PJ4A-4 on the Master Board and GND is DC24 V after the malfunction has been reset.	YES	Change High Voltage Unit.
2	Proper connection between the High Voltage Unit and Master Board.	YES	Change Master Board.
		NO	Correct connection.

(4) C0500: Warm-up Failure

C0510: Abnormally Low Fusing Temperature

C0520: Abnormally High Fusing Temperature

Relevant Electrical Parts	
Fusing Heater Lamp H1 Thermoswitch TS1 Thermistor TH1	Power Supply Board PU1 Master Board PWB-A

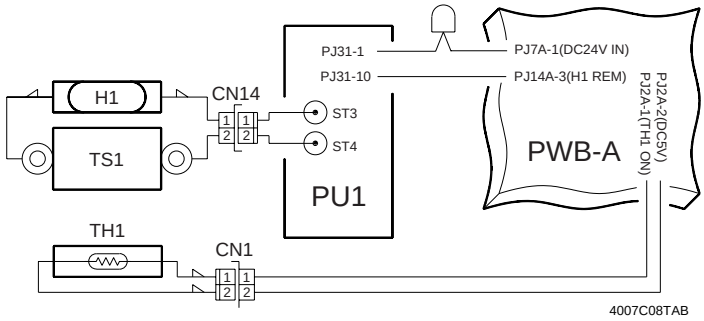

C0500, C0510

Step	Check	Result	Action
1	Fusing Heater Lamp turns ON after the malfunction has been reset.	YES	Correct Thermistor for mounting position and/or clean.
2	Thermistor operation: resistance across CN1-1 and 2 on the Fusing Unit side is infinite, as measured with CN1 disconnected.	YES	Change Thermistor.
3	Thermoswitch and Fusing Heater Lamp operation: there is continuity across CN14-1 and 2 on the Fusing Unit side, as measured with CN14 disconnected.	NO	Change Thermoswitch. Change Fusing Heater Lamp.
4	The voltage across PJ14A-3 on the Master Board and GND is DC0 V (Fusing Heater Lamp ON) and DC24 V (Fusing Heater Lamp OFF) after the malfunction has been reset.	YES	Change Power Supply Board. Change Fuse 2 of Power Supply Board.
		NO	Change Master Board.

C0520

Step	Check	Result	Action
1	Thermistor installed at the correct position.	NO	Correct.
2	Thermistor contaminated.	YES	Clean.
3	The circuit across CN1-1 and 2 on the Fusing Unit side is shorted as checked with CN1 disconnected.	YES	Change Thermistor.
		NO	Change Master Board. Change Power Supply Board.

(5) C0650: Scanner Motor's Failure to Turn, Scanner Home Position Sensor Malfunction

Relevant Electrical Parts	
Scanner Motor M6 Scanner Home Position Sensor PS5	Control Board PWB-I

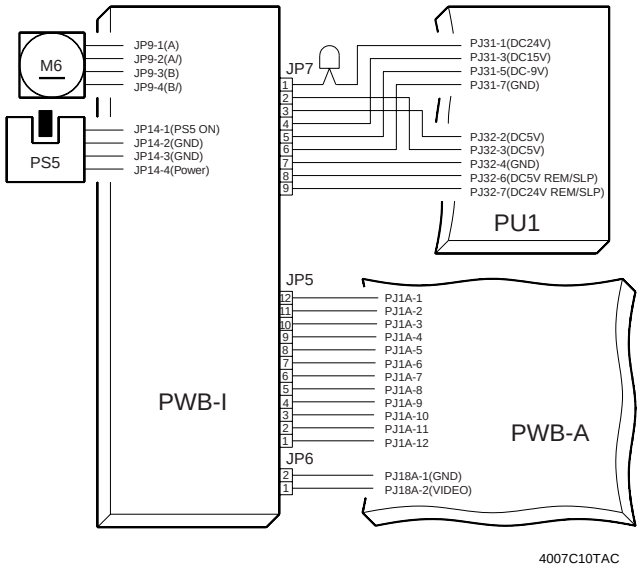

C0650

Step	Check	Result	Action
1	Scanner movement after the malfunction has been reset	YES	To step 4
2	Scanner motion as it is moved manually	NO	Correct drive coupling. Install belt.
3	Proper JP9 connector connection of Control Board	YES	Change Scanner Motor. Change Control Board.
		NO	Correct connections.
4	Scanner Home Position Sensor operation: the voltage across JP14-1 on the Control Board and GND is DC0 V (sensor unblocked) and DC3 V (sensor blocked) after the malfunction has been reset.	YES	Change Control Board.
		NO	Change sensor.

(6) C14A3: Exposure Lamp Malfunction

Relevant Electrical Parts	
Scanner Scanner Interface Board PWB-S	Control Board PWB-I

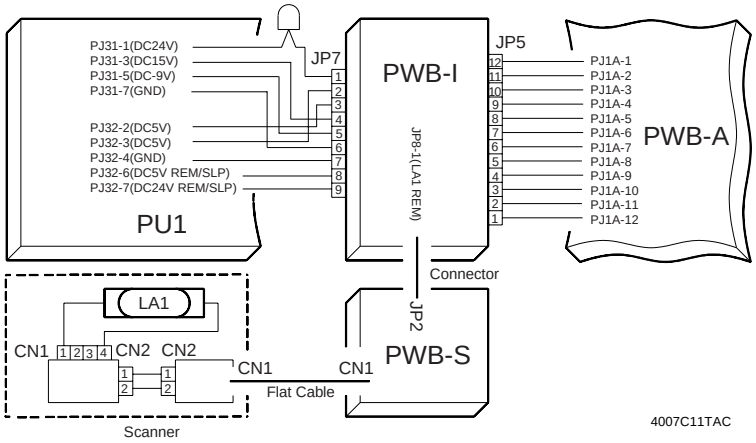

C14A3

Step	Check	Result	Action
1	Proper connections between the Scanner, Scanner Interface Board, and Control Board	YES	Change Scanner Interface Board. Change Control Board. Change Scanner.
		NO	Correct connections.

(7) C1200: System Memory Failure
C1300: Polygon Motor Malfunction
C133B: Option Communications Error
C13F0: SOS Detection Failure
C1468: Hardware (EEPROM) Malfunction

- These malfunctions are detected mainly when there is a fault occurring in software, hardware, or communications.

Code	Action
C1200	1. Reset the malfunction. 2. If the malfunction is detected again, check the Control Board and Memory Board for proper connections. 3. If connections are okay, change the Control Board and/or Memory Board.
C1300, C13F0	1. Reset the malfunction. 2. If the malfunction is detected again, check the harness between, and PJ connections on, the PH Unit and Master Board. 3. If connections are okay, change the PH Unit and Master Board.
C133B	1. Reset the malfunction. 2. If the malfunction is detected again, check the Control Board and the controller board. 3. If connections are okay, change the Control Board and the controller board.
C1468	1. Run “FA” of Function. 2. If it has not been checked okay (“FF” appears on the display), change the EEPROM on the Control Board. If it has been checked okay (“00” appears on the display), change the Control Board itself.

(8) Power Failure

Relevant Electrical Parts	
Power Supply Board PU1 Power Switch S1 Upper Unit Interlock Switch S2	Control Board PWB-I Master Board PWB-A

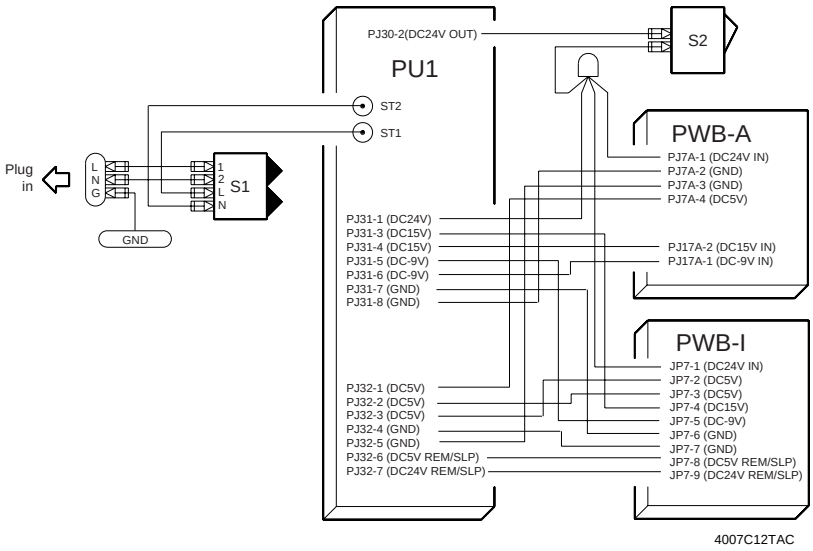

• Power failure

Step	Check	Result	Action
1	No power is supplied when the Power Switch is turned ON. Blown Fuse 1 of the Power Supply Board.	YES	Change Fuse 1 of Power Supply Board.
		NO	Change Power Switch. Change Power Supply Board.
2	Only the display and Fusing Section Cooling Fan Motor operate. The voltage across PJ30-2 on the Power Supply Board and GND is DC24 V when the Power Switch is turned ON.	YES	Change Upper Unit Interlock Switch. Change Control Board. Change Master Board.
		NO	Change Power Supply Board.
3	Only the Fusing Section Cooling Fan Motor operates. The voltage across JP7-2/3 on the Control Board and GND is DC5 V when the Power Switch is turned ON.	YES	Change Control Board.
		NO	Change Power Supply Board.
4	Only the display and Scanner operate. The voltage across PJ7A-4 on the Master Board and GND is DC5 V when the Power Switch is turned ON.	YES	Change Master Board.
		NO	Change Power Supply Board.

4. IMAGE FAILURE

4-1. Image Failure Troubleshooting

- In this chapter, troubleshooting is divided into “initial checks” and “troubleshooting procedures classified by image failures.”
- If any image failure has occurred, first make the initial checks; then proceed to the corresponding image failure troubleshooting procedure.

4-2. Initial Checks

- Determine if the failure is attributable to a basic cause or causes.

Section	Step	Check	Result	Action
Installation site	1	See “PRECAUTIONS FOR INSTALLATION” in GENERAL.	NO	Change the installation site.
Paper	2	Recommended paper used.	NO	Instruct user.
	3	Paper is damp.	YES	Change paper. Instruct user in paper storage.
Original	4	Original not flat	YES	Correct original.
	5	The original is written in light pencil.	YES	Instruct user.
	6	The original is transparent (OHP transparencies, etc.).	YES	Instruct user.
	7	Original Glass is dirty and scratched.	YES	Clean or change.
PM parts	8	The PM parts, as they relate to image formation, have reached the end of cleaning/ replacement cycles.	YES	Clean or change. (See the PM list.)

- Determine if the failure is attributable to an input system (IR) or output system (engine) fault.

Check	Result	Cause
Copy made at a reduced ratio. Original 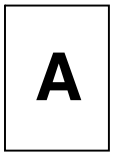 1177T03YA	Full-size copy Reduced copy 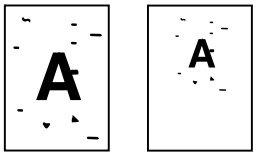 4007T002AA	Input system
	Full-size copy Reduced copy 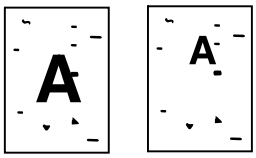 4007T003AA	Output system

4-3. Troubleshooting Procedures Classified by Image Failure

- Image Failure Samples

1. Blank copy

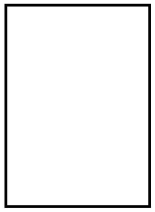

2. Black copy

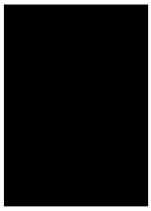

3. Low image density

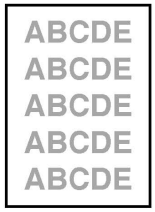

4. Foggy background

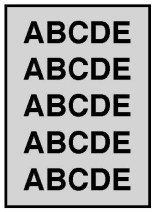

5. Black streaks or bands

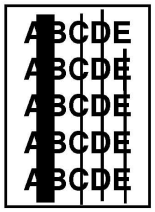

6. Black spots

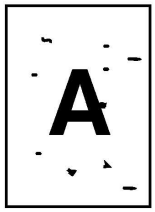

7. Blank streaks or bands

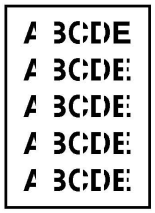

8. Void areas

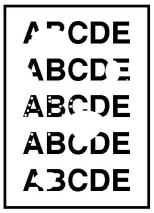

9. Smear on back

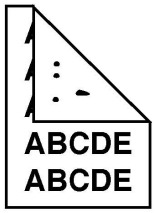

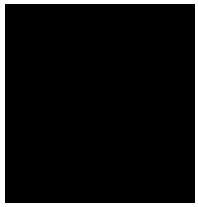

10. Uneven image density

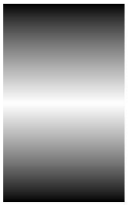

11. Gradation reproduction failure

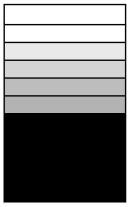

12. Rough image



13. Periodically uneven image



1167T017AA

(1) Blank copy

Section	Step	Check	Result	Action
Engine	1	There is drive to the Imaging Cartridge (I/C).	NO	Correct or change drive coupling.
	2	I/C shutter opens and closes (at the PC Drum).	NO	Correct.
	3	Laser shutter (located in the laser beam path between the PH Unit and PC Drum) opens and closes.	NO	Correct.
	4	The image transfer current terminal is free of dirt and connected properly.	YES	Change the High Voltage Unit. Change PH Unit. Change Master Board. Change Image Transfer Roller.
			NO	Clean or connect correctly.
IR	1	Wiring between the Scanner and Control Board is connected. Flat cables are connected.	YES	Change the Scanner Interface Board. Change Control Board. Change Scanner.
			NO	Connect.

(2) Black copy

Section	Step	Check	Result	Action
Engine	1	The drum charge voltage terminal is dirty.	YES	Clean.
	2	Black copy is still produced even after the I/C has been replaced.	YES	Change High Voltage Unit. Change Master Board.
	3	Wiring between the PH Unit and Master Board is connected.	YES	Change the PH Unit. Change Master Board.
IR	1	Exposure Lamp is ON.	NO	See troubleshooting procedure for malfunction code C14A3. ☞ T-15
	2	Wiring between the Scanner and Control Board is connected.	YES	Change Scanner. Change Control Board.
			NO	Connect.

(3) Low image density

Section	Step	Check	Result	Action
Engine	1	Toner has run out.	YES	Change I/C.
	2	The image transfer current terminal is dirty.	YES	Clean.
	3	The Image Transfer Roller is deteriorated.	YES	Change.
	4	The developing bias terminal is dirty.	YES	Clean.
	5	The Regulator Blade terminal is dirty.	YES	Clean.
	6	Image density is still low even after the I/C has been changed.	YES	Change High Voltage Unit. Change PH Unit. Change Master Board.
IR	1	Wiring between the Scanner and Control Board is connected.	YES	Change Scanner. Change Control Board.
			NO	Connect.

(4) Foggy background

Section	Step	Check	Result	Action
—	1	Extraneous light has entered the copier.	YES	Protect copier from extraneous light.
Engine	1	PC Drum is contaminated with foreign matter.	YES	Clean.
	2	Drum charge voltage terminal is dirty.	YES	Clean.
	3	Regulator Blade terminal is dirty.	YES	Clean.
	4	Seal bias terminal is dirty.	YES	Clean.
	5	Foggy background still occurs even after the I/C has been changed.	YES	Change High Voltage Unit. Change PH Unit. Change Master Board.
IR	1	Mirrors and lens are dirty.	YES	Clean.
	2	Exposure Lamp is dirty.	YES	Clean.
	3	Wiring between the Scanner and Control Board is connected.	YES	Change Scanner. Change Control Board.
			NO	Connect.

(5) Black streaks or bands

Section	Step	Check	Result	Action
Engine	1	PC Drum is dirty.	YES	Clean.
	2	Sleeve Roller is contaminated with foreign matter and caked toner.	YES	Clean.
	3	Toner spilled over areas inside copier.	YES	Change I/C.
	4	Fusing Roller is dirty.	YES	Clean or change.
			NO	Change I/C.
IR	1	Original is positioned correctly.	NO	Position correctly.
	2	Exposure Lamp is dirty.	YES	Clean.
	3	Wiring between the Scanner and Control Board is connected.	YES	Change Scanner. Change Control Board.
			NO	Connect.

(6) Black spots

Section	Step	Check	Result	Action
Engine	1	PC Drum is dirty.	YES	Clean.
	2	Sleeve Roller is contaminated with foreign matter and caked toner.	YES	Clean.
	3	Toner spilled over areas inside copier.	YES	Change I/C.
	4	Fusing Roller is dirty.	YES	Clean or change.
			NO	Change I/C.
IR	1	Mirrors, lens, or Original Glass are dirty.	YES	Clean.
	2	Shading sheet is dirty.	YES	Clean.

(7) Blank streaks or bands

Section	Step	Check	Result	Action
Engine	1	PC Drum is dirty.	YES	Clean.
	2	Sleeve Roller is dirty.	YES	Clean.
	3	Image Transfer Roller is scratched.	YES	Change.
	4	Fusing Roller is scratched or dirty.	YES	Clean or change.
	5	Paper Separator Fingers are scratched or dirty.	YES	Change.
	6	Dust is present on the light path between PH and PC Drum.	YES	Clean.
			NO	Change I/C.
IR	1	Original Glass, mirrors, or lens are dirty.	YES	Clean.
	2	Shading sheet is dirty.	YES	Clean.
	3	Wiring between the Scanner and Control Board is connected.	YES	Change Control Board. Change Scanner.
			NO	Connect.

(8) Void areas

Section	Step	Check	Result	Action
Engine	1	Sleeve Roller is contaminated with foreign matter.	YES	Clean or change.
	2	Image Transfer Roller is scratched.	YES	Change.
	3	Image transfer current terminal is dirty.	YES	Clean.
	4	Developing bias terminal is dirty.	YES	Clean.
	5	Fusing Roller is scratched.	YES	Change.
			NO	Change I/C.
IR	1	Wiring between the Scanner and Control Board is connected.	YES	Change Control Board. Change Scanner.
			NO	Connect.

(9) Smear on back

Section	Step	Check	Result	Action
Engine	1	Size error occurs (“H2” displayed).	YES	Set paper size.
	2	Image Transfer Roller is dirty.	YES	Clean.
	3	Toner spilled over areas inside copier.	YES	Change I/C.
	4	Fusing Back-Up Roller is dirty.	YES	Clean or change.
			NO	Change High Voltage Unit. Change PH Unit. Change Master Board.

(10) Uneven image density

Section	Step	Check	Result	Action
Engine	1	Toner is even on Sleeve Roller.	NO	Change I/C.
	2	Image Transfer Roller is dirty or deteriorated.	YES	Clean or change.
			NO	Change I/C. Change PH Unit. Change Master Board.
IR	1	Original Glass, mirrors, or lens are dirty.	YES	Clean.
	2	Shading sheet is dirty.	YES	Clean or change.
	3	Exposure Lamp is dirty or deteriorated.	YES	Clean. Change Scanner.
	4	Wiring between the Scanner and Control Board is connected.	YES	Change Control Board. Change Scanner.
			NO	Connect.

(11) Gradation reproduction failure

Section	Step	Check	Result	Action
Engine	1	Wiring between the PH Unit and Master Board is connected.	YES	Change PH Unit and Master Board.
			NO	Connect.
IR	1	Original Glass is dirty.	YES	Clean.
	2	Shading sheet is dirty.	YES	Clean.
	3	Wiring between the Scanner and Control Board is connected.	YES	Change Control Board. Change Scanner.
			NO	Connect.

(12) Rough image

Section	Step	Check	Result	Action
Engine	1	Toner is even on Sleeve Roller.	NO	Change.
	2	Image Transfer Roller is dirty.	YES	Clean or change.
	3	Image transfer current terminal is dirty.	YES	Clean.
			NO	Change I/C.
IR	1	Wiring between the Scanner and Control Board is connected.	YES	Change Control Board. Change Scanner.
			NO	Connect.

(13) Periodically uneven image

Section	Step	Check	Result	Action
Engine	1	Sleeve Roller drive gear is cracked or contaminated with foreign matter.	YES	Clean. Change I/C.
	2	Developing Unit drive gear is cracked or contaminated with foreign matter.	YES	Clean. Change I/C.
	3	PC Drum drive gear is cracked or contaminated with foreign matter.	YES	Clean. Change I/C.
	4	Image Transfer Roller drive gear is cracked or contaminated with foreign matter.	YES	Clean or change.
	5	Fusing Unit drive gear is cracked or contaminated with foreign matter.	YES	Clean or change.
	6	PH Unit is securely fastened.	YES	Change PH Unit.
			NO	Secure in position.
IR	1	Scanner Motor drive gear is cracked or contaminated with foreign matter.	YES	Clean or change.
	2	Scanner Motor is secured in position.	NO	Secure in position.
	3	Timing Belts are loose.	YES	Adjust.
	4	Scanner rails are damaged or contaminated with foreign matter.	YES	Clean or change.
	5	Scanner guide shaft is damaged or contaminated with foreign matter.	YES	Clean. Change Scanner.



Copyright
2000 MINOLTA Co., Ltd.
Printed in Japan

Use of this manual should be strictly supervised to avoid disclosure of confidential information.

MINOLTA Co., Ltd.

4007-7991-11 00051800
18605

Di151

SERVICE MANUAL

[GENERAL]



INDEX (GENERAL)

GENERAL

MECHANICAL/ELECTRICAL

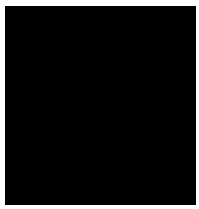

GENERAL

CONTENTS

1. SAFETY INFORMATION G-1
2. SPECIFICATION G-7
3. PRECAUTIONS FOR INSTALLATION G-9
   3-1. Installation Site G-9
   3-2. Power Source G-9
   3-3. Grounding G-9
4. PRECAUTIONS FOR USE G-10
   4-1. To ensure that the copier is used in an optimum condition G-10
   4-2. Operating Environment G-10
   4-3. Power Requirements G-10
   4-4. Note G-10
5. HANDLING OF CONSUMABLES G-11
6. OTHER PRECAUTIONS G-12
7. SYSTEM OPTIONS G-13

1. SAFETY INFORMATION

Laser Safety

This is a digital machine which prints by means of a laser. There is no possibility of danger from the laser, provided the machine is operated according to the instructions in this manual.

Since radiation emitted by the laser is completely confined within protective housing, the laser beam cannot escape from the machine during any phase of user operation.

This machine is certified as a Class 1 product. This means the machine does not produce hazardous laser radiation.

CAUTION: The use of controls, adjustments or performance of procedures other than those specified in this manual may result in hazardous radiation exposure. Because of this, Minolta strongly recommends that you operate your copy machine only as described in this documentation.

Internal Laser Radiation

Maximum Average Radiation Power: 5.0 mW at laser aperture of the print head unit

Wavelength: 770-795 nm

This product employs a Class IIIb Laser Diode that emits an invisible laser beam.
The Laser Diode and Scanning Polygon Mirror are incorporated in the print head unit.
The print head unit is NOT A FIELD SERVICE ITEM.
Therefore, the print head unit should not be opened under any circumstances.

For United States

CDRH regulation
This copier is certified as a Class 1 Laser product under the Radiation Performance Standard according to the Food, Drug and Cosmetic Act of 1990. Compliance is mandatory for Laser products marketed in the United States and is reported to the Center for Devices and Radiological Health (CDRH) of the U.S. Food and Drug Administration of the U.S. Department of Health and Human Services (DHHS). This means that the device does not produce hazardous laser radiation.

The label shown on page G-3 indicates compliance with the CDRH regulations and must be attached to laser products marketed in the United States.

CAUTION: Use of controls, adjustments or performance of procedures other than those specified in this manual may result in hazardous radiation exposure.

This is a semiconductor laser. The maximum power of the laser diode is 5 mW and the wavelength is 770-795 nm.

For Europe

CAUTION: Use of controls, adjustments or performance of procedures other than those specified in this manual may result in hazardous radiation exposure.

This is a semiconductor laser. The maximum power of the laser diode is 5 mW and the wavelength is 770-795 nm.

For Denmark

ADVARSEL
Usynlig laserstråling ved åbning, når sikkerhedsafbrydere er ude af funktion.
Undgå udsættelse for stråling.

Klasse 1 laser produkt der opfylder IEC60825 sikkerheds kravene.

For Finland

LUOKAN 1 LASERLAITE

VAROITUS
Laitteen käyttäminen muulla kuin tässä käyttöohjeessa mainitulla tavalla saattaa altistaa käyttäjän turvallisuusluokan 1 ylittävälle näkymättömälle lasersäteilylle.

VARO
Avattaessa ja suojalukitus ohitettaessa olet alttiina näkymättomälle lasersäteilylle. Älä katso säteeseen.

For Sweden

KLASS 1 LASER APPARAT

VARNING
Om apparaten används på annat sätt än i denna bruksanvisning specificerats, kan användaren utsättas för osynlig laserstrålning, som överskrider gränsen för laserklass 1.

VARNING
Osynlig laserstråining när denna del är öppnad och spärren är urkopplad. Betrakta ej stråien.

For Norway

ADVERSEL
Dersom apparatet brukes på annen måte enn spesifisert i denne bruksanvisning, kan brukeren utsettes för unsynlig laserstrålning, som overskrider grensen for laser klass 1.

Dette en halveder laser. Maksimal effekt till laserdiode er 5 mW og bϕlgelengde er 770-795 nm.

Laser Safety Label

A laser safety label is attached to the outside of the copy machine as shown below.

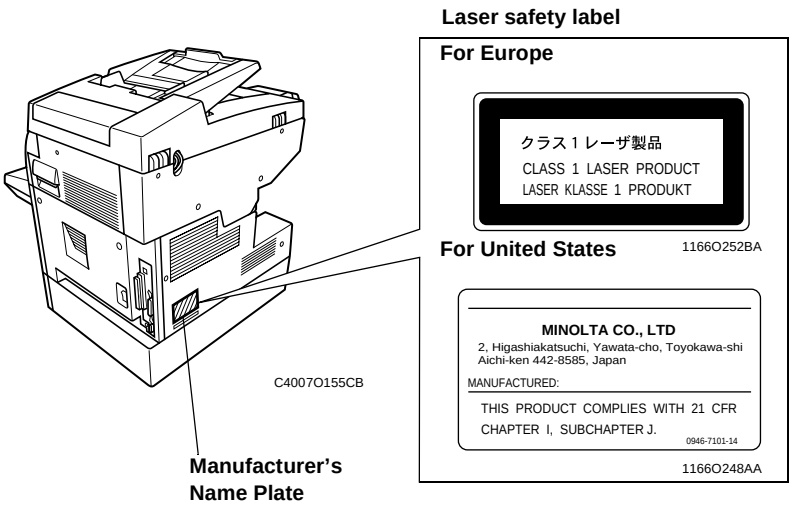

The Manufacturer's Name Plate is affixed at the position illustrated above.
Please write down the Model Name and Serial No. of your copier here.

Model:
Serial No.:

Label inside copy machine

The following laser safety label will be attached inside the copy machine as shown below.

Please read the following for your own protection.

⚠ Caution

Opening the cover indicated by the Caution label may expose you to harmful laser radiation which could cause damage or loss of eyesight. Do not open the cover when the power is on.

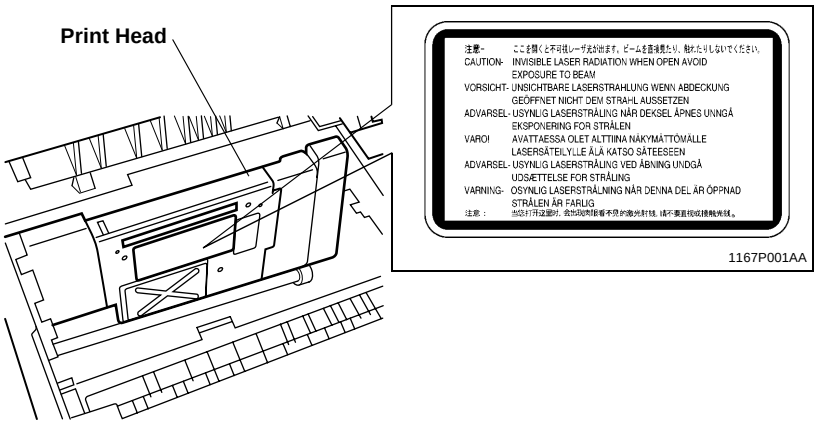

C4007O160CA

ALL Areas

CAUTION
Danger of explosion if battery is incorrectly replaced.
Replace only with the same or equivalent type
recommended by the manufacturer.
Dispose of used batteries according
to the manufacturer's instructions.

Germany only

VORSICHT!
Explosinsgefahr bei unsachgemäßen austausch der
batterie. Ersatz nur durch denselben oder einen vom hersteller
empfohlenen ähnlichen typ. Entsorgung gebrauchter batterien
nach angaben des herstellers.

Denmark only

ADVARSEL!
Lithiumbatteri - Eksplosionsfare ved fejlagtig håndtering
Udskiftning må kun ske med batteri
af samme fabrikat og type.
Levér det brugte batteri tilbage til leverandøren.

Norway only

ADVARSEL
Eksplosjonsfare ved feilaktig skifte av batteri.
Benytt samme batteritype eller en tilsvarende
type anbefalt av apparatfabrikanten.
Brukte batterier kasseres i henhold til fabrikantens
instruksjoner.

Sweden only

VARNING
Explosionsfara vid felaktigt batteribyte.
Använd samma batterityp eller en ekvivalent
typ som rekommenderas av apparattillverkaren.
Kassera använt batteri enligt fabrikantens
instruktion.

Finland only

VAROITUS
Paristo voi räjähtää, los se on virheellisesti asennettu.
Vaihda paristo ainoastaan laitevalmistajan suosittelemaan
tyyppiin. Hävitä Käytetty paristo valmistajan ohjeiden
mukaisesti.

ALL Areas

CAUTION

“Replace only with the same or equivalent type recommended by the manufacturer. Dispose of used IC Package according to the manufacturer’s instructions.”

Germany only

VORSICHT!

⇒”Austausch nur durch denselben oder einen vom Hersteller empfohlenen, gleichwertigen typ. Entsorgung gebrauchter Batterien nach Angaben des Herstellers.

2. SPECIFICATIONS

TYPE	:	Desktop
ORIGINAL SCANNING SYSTEM	:	CCD Line Sensor
PHOTOCONDUCTOR	:	Organic Photoconductor
COPYING SYSTEM	:	Electrostatic Dry Powdered Image Transfer to Plain Paper
RESOLUTION	:	600 x 600dpi
PAPER FEEDING SYSTEM	:	2-Way system — Paper Tray └ Manual Bypass Tray
EXPOSURE SYSTEM	:	CCD Scanning
DEVELOPING SYSTEM	:	Fine Micro-Toning System
CHARGING SYSTEM	:	Rotating Charge Brush
IMAGE TRANSFER SYSTEM	:	Image Transfer Roller
PAPER SEPARATING SYSTEM	:	Paper Separator Finger
FUSING SYSTEM	:	Heat Roller
PAPER DISCHARGING SYSTEM	:	Charge Neutralizing Brush
MAXIMUM ORIGINAL SIZE	:	Metric-216 x 356 mm; Inch-8-1/2 x 14

COPY MEDIUM

		Paper Tray	Manual Bypass Tray
Medium	Plain Paper (60 to 90 g/m^2, 16 to24 lb)	❍	❍
	Translucent paper	–	❍
	Transparencies	–	❍
	Thick paper (90 to 163 g/m^2, 24 to 43-1/4 lb)	–	❍
	Recycled paper	❍	❍
Dimensions	Maximum (Width x Length)	210 x 297 mm 8-1/2 x 14	216 x 356 mm 8-1/2 x 14
	Minimum (Width x Length)	148 x 210 mm 5-1/2 x 8-1/2	128 x 182 mm 5 x 7-1/4

MULTIPLE COPIES	:	1 to 100
WARM-UP TIME	:	28 s or less with room temperature of 23 °C/73 °F and rated power voltage
FIRST COPY TIME	:	11.0 s or less (A4L / 8-1/2 x 11)

CONTINUOUS COPY SPEED (copies/min)

Zoom Ratio / Size	100%
A4L	15
8-1/2 x 11	15

ZOOM RATIOS

	Area / Mode	Metric	Inch
Fixed	Full Size	100 %	100 %
	Reduction	81 % 70 %	78 % 64 %
	Enlargement	115 % 141 %	129 % 154 %
Variable	50 % to 199 % (in 0.1 % increments)		

LENS : Through Lens
EXPOSURE LAMP : Cold-cathode discharge tube
FUSING TEMPERATURE : 210 °C / 410 °F

POWER/CURRENT CONSUMPTION (copier only)

Voltage	Exposure Lamp (Rating)	Fusing Heater Lamp (Rating)	Max. Power Consumption
115 V	12 V 5.4 W	120 V 650 W	680 W
120 V			715 W
127 V			770 W
220 V		220/240 V 650 W	670 W
240 V			750 W

POWER REQUIREMENTS : 115 V, 120 V, 127 V, 220-240 V; 50/60 Hz

ENVIRONMENTAL CONDITIONS

Temperature	10-30 °C (50-86 °F) with a fluctuation of up to 10 °C (18 °F) per hour.
Humidity	15-85 % (Relative Humidity) with a fluctuation of up to 20 % per hour.
Ambient Illumination	3,000 lx or less
Levelness	1° or less

COPIER DIMENSIONS : Width.....562 mm (22-1/4)
Depth.....530 mm (20-3/4)
Heigth.....442 mm (17-1/2)
COPIER WEIGHT : 28.1 kg (62 lb)

3. PRECAUTIONS FOR INSTALLATION

3-1. Installation Site

To ensure safety and utmost performance of the copier, the copier should NOT be used in a place:

- Where it will be subjected to extremely high or low temperature or humidity.
- Where it will be subjected to sudden fluctuations in either temperature or humidity.
- Which is exposed to direct sunlight.
- Which is in the direct air stream of an air conditioner, heater, or ventilator.
- Which has poor ventilation or is dusty.
- Which does not have a stable, level floor or where it will receive undue vibration.
- Which is near any kind of heating device.
- Which is near volatile flammables (thinner, gasoline, etc.).
- Where it may be splashed with water.
- Which puts the operator in the direct stream of exhaust from the copier.
- Where ammonia gas might be generated.

3-2. Power Source

- If any other electrical equipment is sourced from the same power outlet, make sure that the capacity of the outlet is not exceeded.
- Use a power source with little voltage fluctuation.
- Never connect by means of a multiple socket any other appliances or machines to the outlet being used for the copier.
- Ensure that the copier does not ride on the power cord or communication cable of other electrical equipment, and that it does not become wedged into or underneath the mechanism.
- Make the following checks at frequent intervals:

✻ Is the power plug abnormally hot?
✻ Are there any cracks or scrapes in the cord?
✻ Has the power plug been inserted fully into the outlet?
✻ Does something, including the copier itself, ride on the power cord?

Use an outlet with a capacity of 115/120/127 V or 220-240 V.

3-3. Grounding

- Always ground the copier to prevent receiving electrical shocks in the case of electrical leakage.
- Connect the ground wire to the ground terminal of the outlet or a grounding contact which complies with the local electrical standards.
- Never connect the ground wire to a gas pipe, the ground wire for a telephone, lightning arrester, or a water pipe for fear of fire and electrical shock.

4. PRECAUTIONS FOR USE

4-1. To ensure that the copier is used in an optimum condition

- Never place a heavy object on the copier or subject the copier to shocks.
- Insert the power plug all the way into the outlet.
- Do not attempt to remove any panel or cover which is secured while the copier is making copies.
- Do not turn OFF the copier while it is making copies.
- Provide good ventilation when making a large number of copies continuously.
- Never use flammable sprays near the copier.
- If the copier becomes inordinately hot or produces abnormal noise, turn it OFF and unplug it.
- Do not turn ON the power switch at the same time when you plug the power cord into the outlet.
- When unplugging the power cord, do not pull on the cord; hold the plug and pull it out.
- Do not bring any magnetized object near the copier.
- Do not place a vase or vessel containing water on the copier.
- Be sure to turn OFF the power switch at the end of the workday or upon power failure.
- Use care not to drop paper clips, staples, or other small pieces of metal into the copier.

4-2. Operating Environment

The operating environmental requirements of the copier are as follows.

- Temperature: 10 to 30 °C (50 to 86 °F)
- Humidity: 15 to 85 %
- Rate of temperature change: 10 °C (18 °F)/h
- Rate of humidity change: 10 %/h

4-3. Power Requirements

The power source voltage requirements are as follows.

- Voltage fluctuation: AC115/120/127/220-240
  ±10 % (copying performance assured)
  +10 %
  -15 % (paper feeding performance assured)
- Frequency fluctuation: 50/60 Hz ±0.3 %

4-4. Note

- It is prohibited to copy paper and hard currencies, government securities, and municipal bonds (even when they are stamped as “Sample”).
- For fear of infringement of copyright, it is also prohibited to copy copyrighted works, including books, music, works of art, maps, drawings, motion pictures, and photos except when the copy is to be used only personally.

5. HANDLING OF CONSUMABLES

Before using any consumables, always read the label on its container carefully.

- Paper can be easily damaged by dampness. To prevent absorption of moisture, store paper, which has been removed from its wrapper but not loaded in the drawer, in a sealed plastic bag in a cool, dark place.
- Keep consumables out of the reach of children.
- Do not touch the PC Drum with bare hands.
- The same sized paper is of two kinds, short grain and long grain. Short grain paper should only be fed through the copier crosswise, long grain paper should only be fed lengthwise.
- If your hands become soiled with toner, wash them with soap and water.
- Do not throw away any used consumables (PC Drum, starter, toner, etc.). They are to be collected.
- Do not burn, bury in the ground, or throw into the water any consumables (PC Drum, starter, toner, etc.).
- Do not store consumables in a place which:

✻ Is hot and humid.
✻ Is subject to direct sunlight.
✻ Has an open flame nearby.

6. OTHER PRECAUTIONS

Use the following precautions when performing service jobs for a copier that uses a laser.

- When a service job needs to be performed in the laser beam path, such as when working around the printerhead or PC Drum, be sure first to unplug the power cord of the copier from the outlet.
- If the job requires that the power cord be left plugged in, observe the following precautions.

1. Take off your watch, ring and any other reflective object and wear laser protective goggles.
2. Keep users away from the job site.
3. Do not bring a highly reflective tool into the laser beam path during the service job.

7. SYSTEM OPTIONS

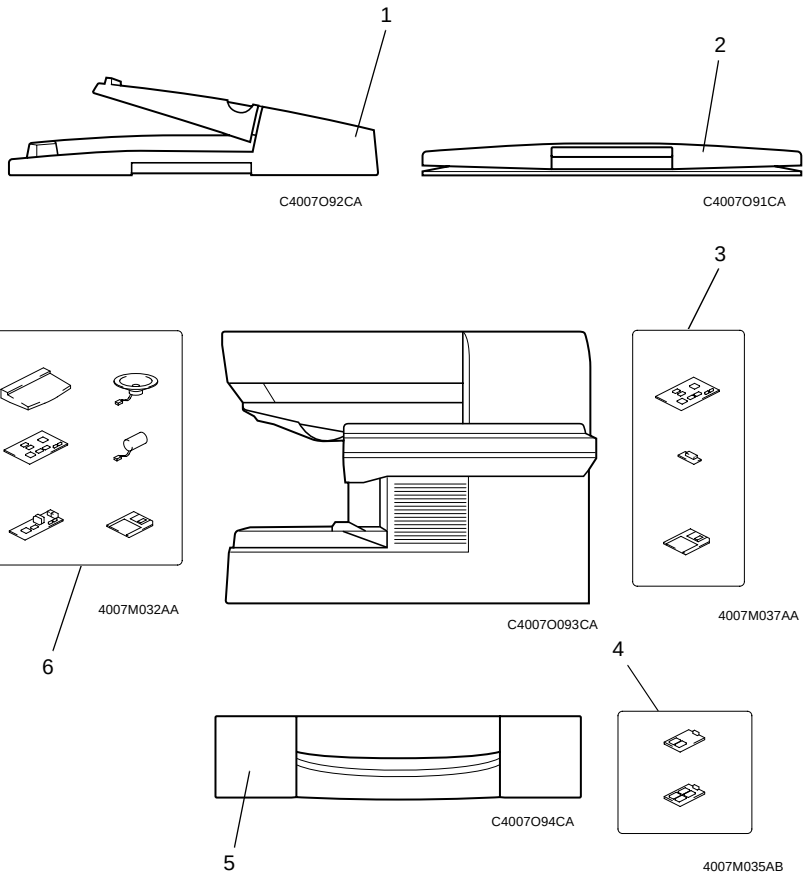

1. Automatic Document Feeder AF-8
2. Original Cover (Except Europe)
3. Printer Controller Pi1501
4. Memory for Copier (16MB/32MB)
5. Paper Feed Unit PF-116
6. Fax Unit for Di151

MECHANICAL/ ELECTRICAL

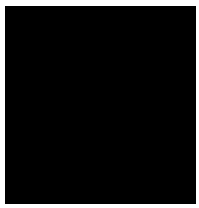

CONTENTS

1. CROSS SECTIONAL VIEW M-1
2. COPY PROCESS M-2
3. DRIVE SYSTEM M-4
4. SEQUENTIAL EXPLANATION M-5
5. PC DRUM SECTION M-6
   5-1. PC Drum Drive Mechanism M-6
   5-2. Grounding of the PC Drum M-7
6. PC DRUM CHARGING SECTION M-8
7. IMAGE READING SECTION M-9
   7-1. Exposure Components Section M-10
   7-2. Exposure Lamp Control M-11
   7-3. Image Processing Process M-12
   7-4. Scanner Movement Mechanism M-14
   7-5. Scanner Motor Drive Control M-15
8. PH SECTION M-16
   8-1. Laser Exposure Process M-17
   8-2. Laser Emission Area (HIA and VIA Signals) M-18
9. DEVELOPING UNIT SECTION M-19
   9-1. Developing Unit Drive Mechanism M-20
   9-2. Sleeve Roller M-20
   9-3. Developing Bias M-21
   9-4. Toner Empty Detection M-22
10. PAPER TAKE-UP/FEEDING SECTION M-23
   10-1.Paper Empty Detection Mechanism M-24
   10-2.Paper Lifting Mechanism M-25
   10-3.Paper Take-Up Mechanism M-26
   10-4.Paper Take-Up Control M-26
      (1) Paper Take-Up Retry Control M-27
11. PC DRUM CLEANING SECTION M-28
12. IMAGE TRANSFER SECTION M-29
13. FUSING UNIT SECTION M-30
   13-1.Fusing Unit Drive Mechanism M-31
   13-2.Fusing Rollers Pressure Mechanism M-32
   13-3.Fusing Temperature Control M-33
      (1) Fusing Temperature Control during continuous small-size paper feeding M-34
   13-4.Mechanism and Control of Fusing Roller Small-Amount Turning M-34
14. OTHER MECHANISMS M-35
   14-1.Memory Backup M-35
   14-2.Cooling Mechanism M-36
      (1) PH Section Cooling Mechanism M-36
      (2) Fusing Section Cooling Mechanism M-37

1. CROSS SECTIONAL VIEW

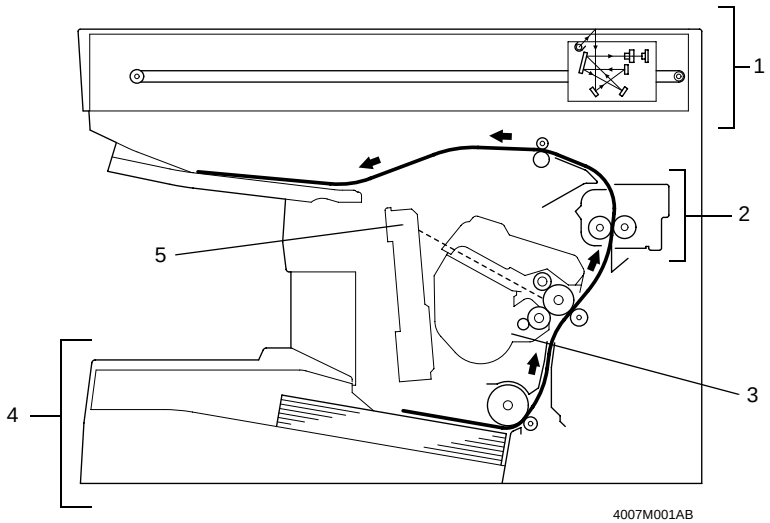

1. IR Section
2. Fusing Unit
3. I/C
4. Paper Tray
5. PH Section

2. COPY PROCESS

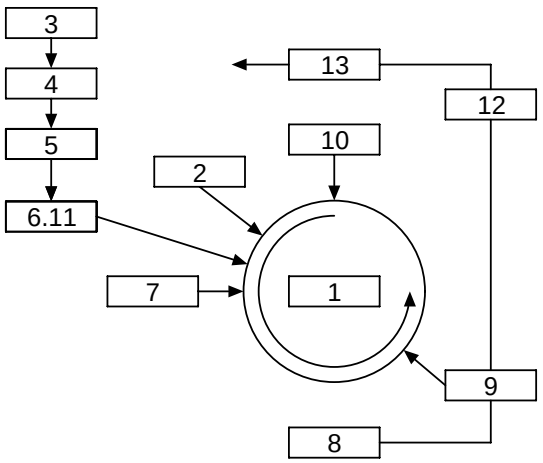

4007M002AB

1. PC Drum
- Used as the medium on which a visible developed image of the original is formed.

2. Drum Charging
- A uniform negative DC charge is deposited across the entire surface of the PC Drum.

3. Photoelectric Conversion
- CCD converts the image data represented by light reflected off the original to a corresponding electrical signal which, in turn, is output to IR image-processing section.

4. IR Image-Processing
- The electrical signal is converted to an 8-bit digital image signal (A/D conversion) which, in turn, goes through appropriate correction before being output to the PH Section.

5. PH Image Processing
- After going through corrections, the digital image signal is converted to a corresponding electrical signal (D/A conversion) that controls the intensity of the light from the laser diode.

6. Laser Exposure
- The laser beam strikes the surface of the PC Drum, forming an electrostatic latent image.

7. Developing
- Toner adheres to the electrostatic latent image on the PC Drum surface, creating a visible image.
- A DC (-) bias voltage is applied to the Sleeve Roller to charge toner.

8. Paper Feeding
- Paper is fed from either the Paper Tray or Manual Bypass Tray.

9. Image Transfer
- A DC (+) bias voltage is applied to the Image Transfer Roller to transfer the visible toner image formed on the PC Drum surface to the paper.

10. Cleaning
- Residual toner on the surface of the PC Drum is scraped off.

11. PC Drum Erase
- A laser beam strikes the surface of the PC Drum to remove any residual charge from it.

12. Fusing
- The developed image is permanently fused to the paper by a combination of heat and pressure applied by the Fusing Roller and Fusing Backup Roller.

13. Exit
- The paper is fed out onto the Exit Tray.

3. DRIVE SYSTEM

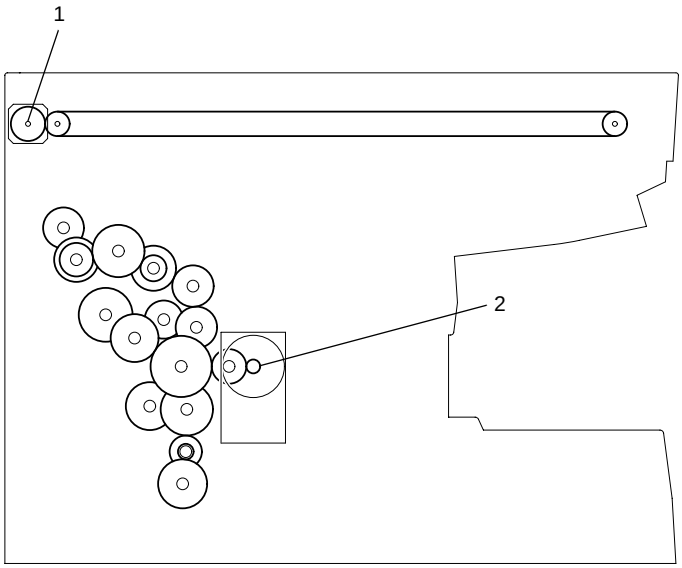

1. Scanner Motor M6
2. Main Motor M1

4. SEQUENTIAL EXPLANATION

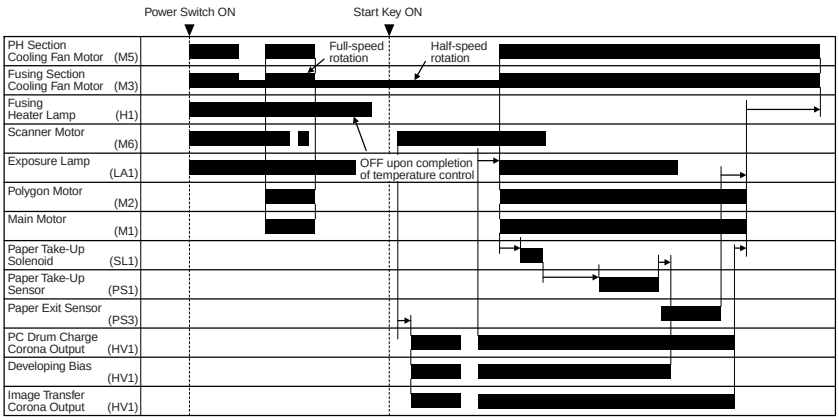

4007M029CA

5. PC DRUM SECTION

The PC Drum consists of layers of semiconductive materials placed on an aluminum alloy base, on which an electrostatic latent image is formed.

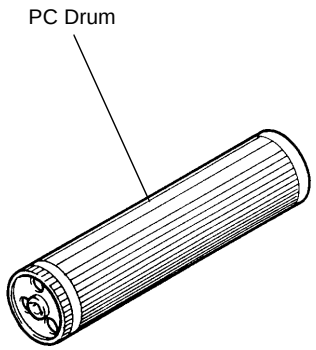

1139M006AA

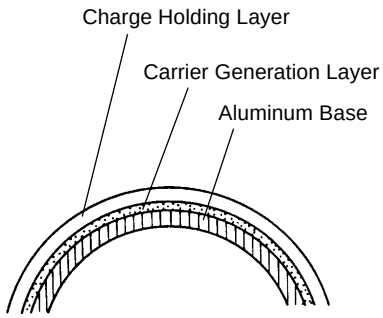

1139M007AA

5-1. PC Drum Drive Mechanism

The PC Drum is rotated by drive from a motor.

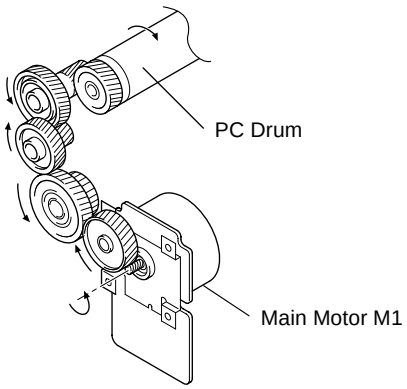

4007M004AC

	CONTROL SIGNAL	ON	OFF	WIRING DIAGRAM
M1	PWB-A PJ6A-3	L	H	8-F

5-2. Grounding of the PC Drum

The potential on the surface of the PC Drum exposed to the light is grounded to the frame.

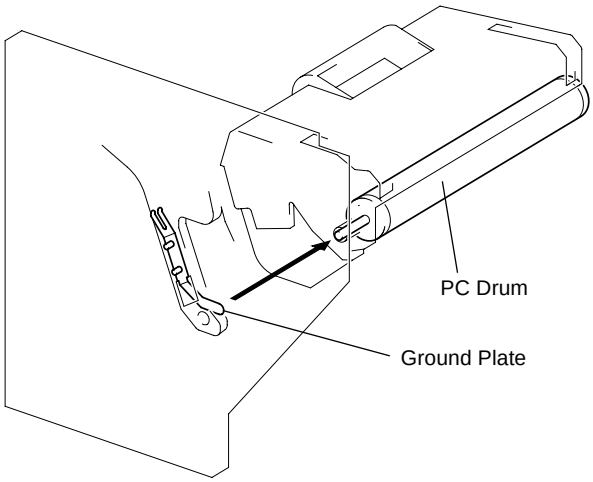

4007M005AC

6. PC DRUM CHARGING SECTION

- Both the Rotating Charge Brush and Precharge Film are used to negatively charge the surface of the PC Drum.
- The Rotating Charge Brush applies charge directly to the PC Drum, which ensures that the PC Drum is charged evenly and stably with a low voltage. It also helps reduce dramatically the amount of ozone produced in the copier as compared with corona discharge systems.
- Prior to charging by the Rotating Charge Brush, the Precharge Film will perform preliminary charging of both ends of the PC Drum to enhance drum charging efficiency.

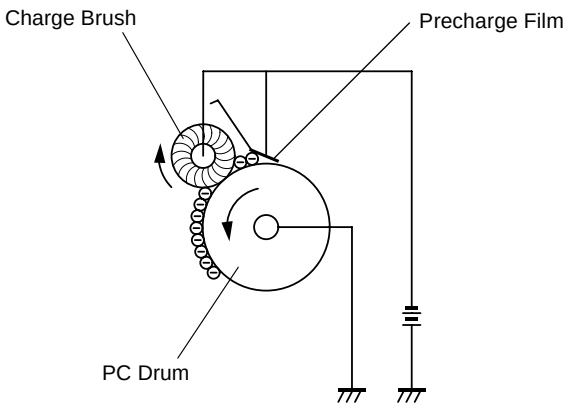

4007M015AB

	CONTROL SIGNAL	ON	OFF	WIRING DIAGRAM
HV PC Drum Charger	PWB-A PJ4A-8	L	H	1-F

7. IMAGE READING SECTION

CCD converts the light reflected off the original to a corresponding electrical signal which is, in turn, applied to the PH image processing section.

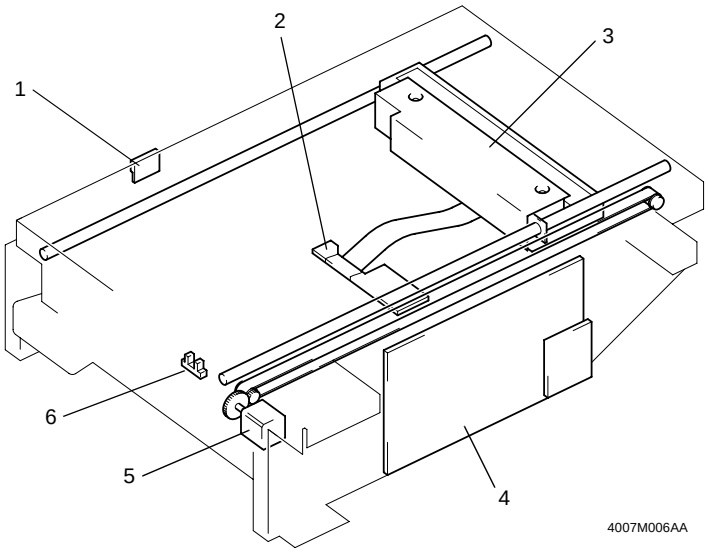

1. ADF Set Switch S3
2. Scanner Interface Board PWB-S
3. Scanner
4. Control Board PWB-I
5. Scanner Motor M6
6. Scanner Home Position Sensor PS5

7-1. Exposure Components Section

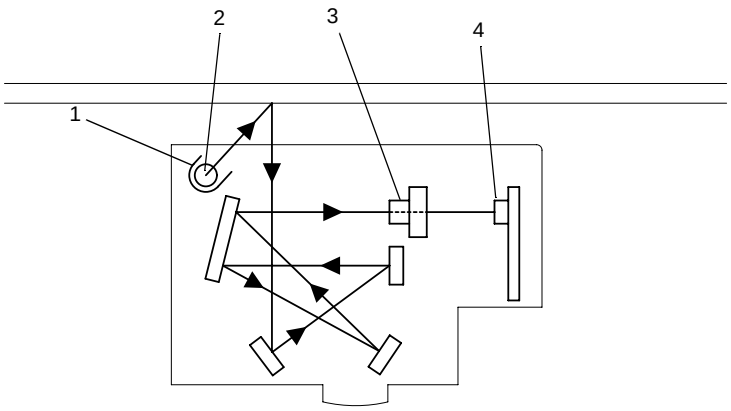

1. Reflector
2. Exposure Lamp LA1
3. Lens
4. CCD

7-2. Exposure Lamp Control

- The Exposure Lamp is turned ON or OFF by the Exposure Lamp Remote signal output from the Control Board.
- It is turned ON or OFF at different timings between when the Power Switch is turned ON and when the Start Key is pressed.Details;

<When Power Switch is turned ON>

1. The Exposure Lamp turns ON and the Scanner starts moving.
2. The Exposure Lamp turns ON and OFF three times to set the MAX and MIN output voltages for the CCD.
3. The Scanner stops at the shading position underneath the scale.
4. The Exposure Lamp power checking.
5. The Scanner scans the shading sheet before returning to its home position.
   At this time, it scans the white pattern and black pattern to determine the max. and min. output voltages for the CCD Sensor.
6. After a given period of time, the Exposure Lamp goes out. Then, the Scanner moves to, and stops at, the shading position.
   The time it takes the Exposure Lamp to turn OFF is determined by the setting of C8 of Tech. Rep. Choice, the default setting being 30 sec.

<When Start key is pressed>

1. The Scanner starts moving at the shading position.
2. The Exposure Lamp turns ON and OFF several times.
3. The Exposure Lamp power checking.
4. The Scanner moves to the home position and starts a scan motion to read the original.
5. The Scanner stops at its home position.

	CONTROL SIGNAL	ON	OFF	WIRING DIAGRAM
LA1	PWB-I JP8I-1	L	H	6-B

7-3. Image Processing Process

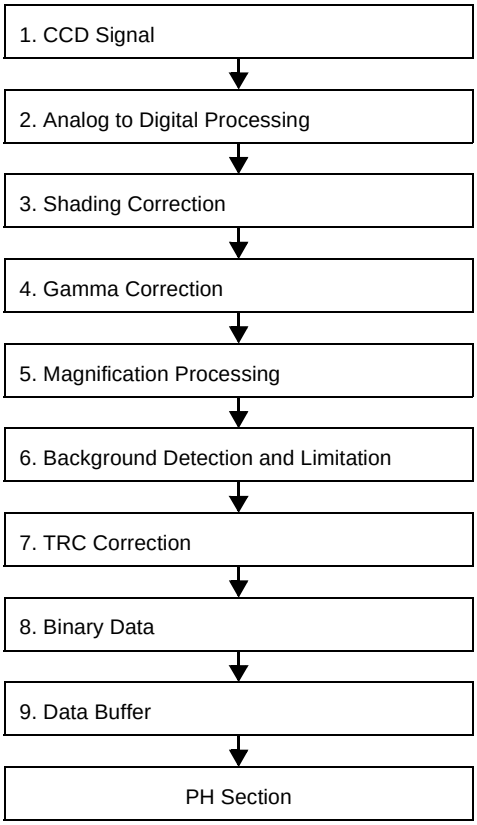

1. CCD Signal
- The Exposure Lamp illuminates the original and the light reflected off the original passes through the mirrors and lens to reach the CCD Sensor which, in turn, converts the optical data to a corresponding analog electrical signal.

2. Analog to Digital Processing
- This block with gain adjustment, converts the result to 8-bit digital image signals.

3. Shading Correction
- Corrects errors in the image data introduced by factors such as variations in sensitivity among CCD Sensor pixels, uneven Exposure Lamp light distribution, and uneven lens shading.

4. Gamma Correction
- Adjusts data so that the scan image's gradation characteristics will be proportional to gradation characteristics of the original.

5. Magnification Processing
- Processes the image data as necessary according to the zoom setting (Enlarge/Reduce) made on the control panel.

6. Background Detecting and Limitation
- Detects the background of original and adjusts the threshold of image processing.

7. TRC Correction
- Corrects the image data to match it with toner characteristics on the engine side.
- TRC: Toner Reproduce Curve

8. Binary Data
- Converts the 8-bit image gray data to corresponding binary data.

9. Data Buffer
- Transmits binary data to the PH.

7-4. Scanner Movement Mechanism

- The Scanner is driven by the Scanner Motor.
- The Scanner is detected at its home position by the Scanner Home Position Sensor.

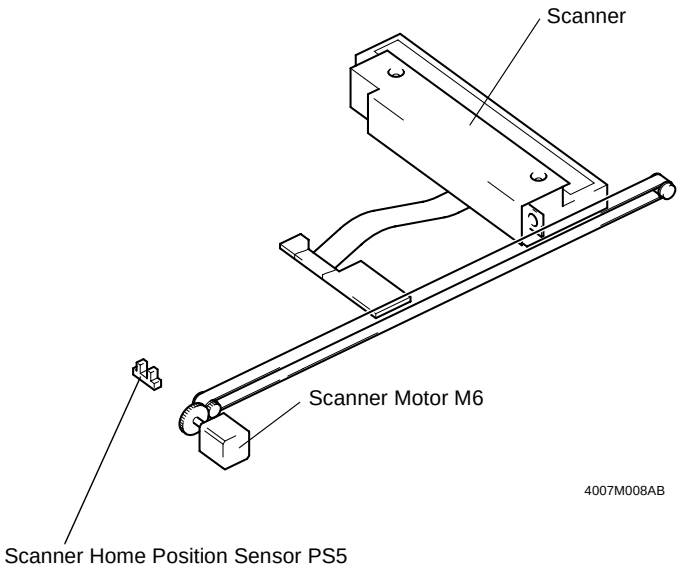

7-5. Scanner Motor Drive Control

- The speed at which the Scanner is moved is controlled by varying the period of the motor drive pulse that is timed with the reference clock.

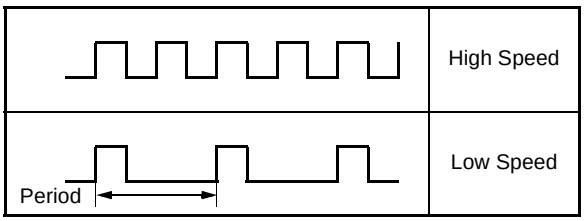

- The distance over which the Scanner travels is controlled by the number of motor drive pulses that corresponds to each paper size and zoom ratio.

	CONTROL SIGNAL	ON	OFF	WIRING DIAGRAM
M6	PWB-I JP9I-1~4	Pulse Output		4-D

8. PH SECTION

Image data sent from the IR section is corrected and, based on the corrected data, a laser light is projected onto the surface of the PC Drum to form a corresponding latent image.

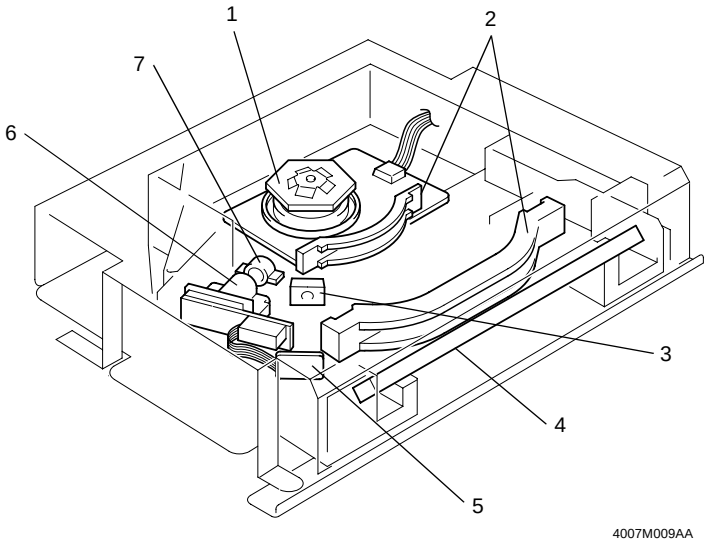

1. Polygon Motor
2. Lenses
3. SOS Lens
4. Return Mirror
5. SOS Sensor Board
6. LD Board
7. Cylindrical Lens

8-1. Laser Exposure Process

The Start key is pressed.

↓

The laser is forced ON.

↓

The laser beam is corrected and the laser output is adjusted to an optimum level.

↓

When the laser beam strikes the SOS Sensor, an SOS signal is generated.

↓

The SOS signal, together with the HSYNC signal (the image start position in the CD direction) and TOD signal (the image start position in the FD direction), determines the laser emission timing.

↓

A laser light is emitted in accordance with the VIDEO signal (image data).

↓

The laser light strikes the surface of the PC Drum to form an electrostatic latent image.

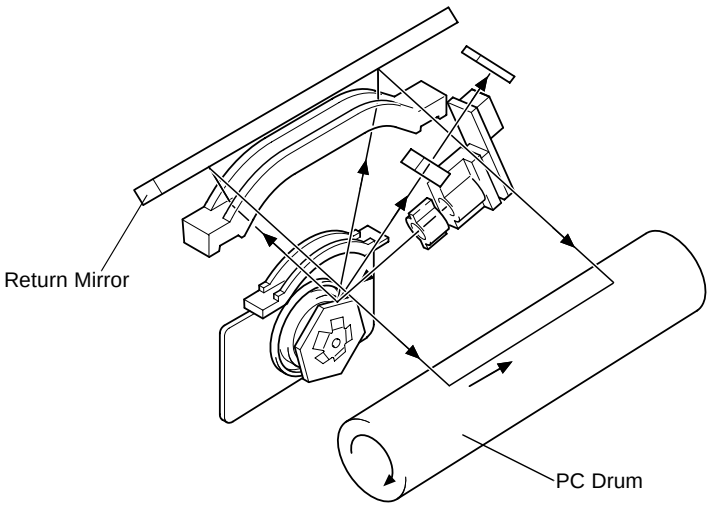

8-2. Laser Emission Area (HIA and VIA Signals)

- The laser radiation area is controlled in the CD and FD directions, respectively.
- The HSYNC signal (IR) determines the image start position in the CD direction.
- The Paper Take-Up Sensor and the TOD signal (engine) determine the image start position in the FD direction.
- The HSYNC signal and TOD signal are timed by the SOS signal.
- The image data (VIDEO signal) is output after the image start positions in the CD and FD directions have been determined. The Paper Take-Up Sensor controls the image end position in the FD direction.

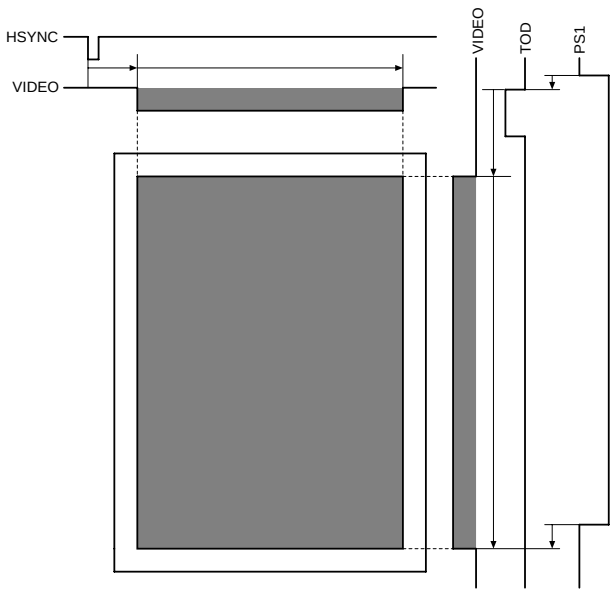

4007M016AA

9. DEVELOPING UNIT SECTION

Toner is applied to the electrostatic latent image formed on the surface of the PC Drum, resulting in a visible, developed toner image.

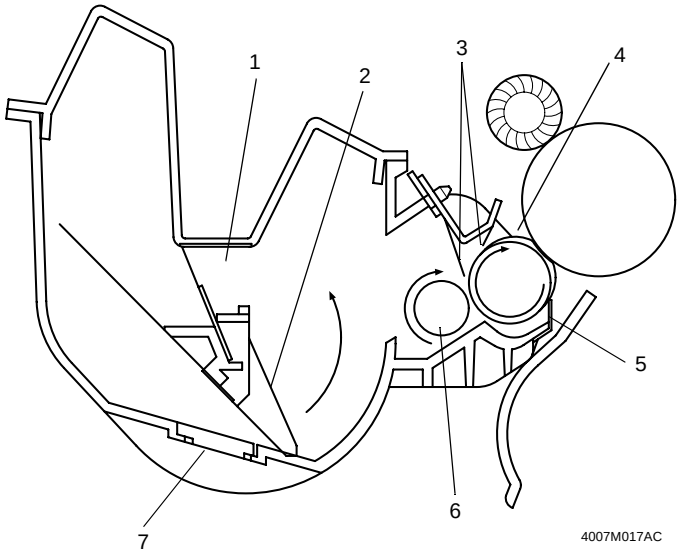

1. Reflecting Mirror
2. Toner Agitating Blade
3. Toner Regulator Blade
4. Sleeve Roller
5. Charge Neutralizing Sheet
6. Toner Supply Roller
7. LED Window

9-1. Developing Unit Drive Mechanism

The rollers and screws are driven through a gear train from the motor.

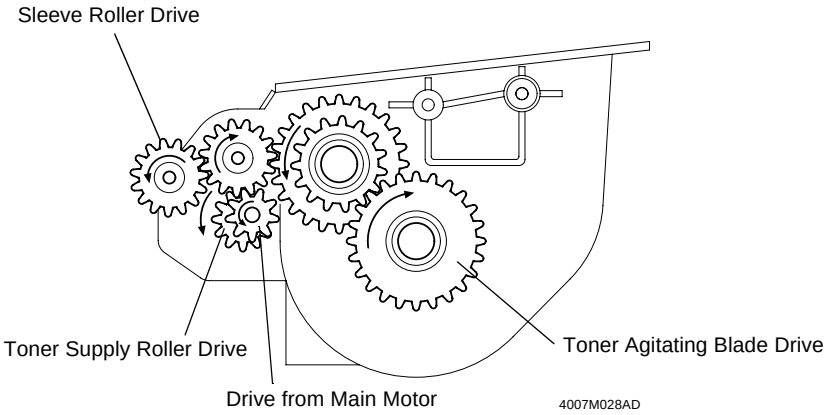

9-2. Sleeve Roller

- The Sleeve Roller consists of a Developing Sleeve and Flexible Sleeve.
- The Flexible Sleeve has a diameter greater than the Developing Sleeve does. The Sleeve Guide presses the Flexible Sleeve against the Developing Sleeve to form a slack in it.
- The slack in the Flexible Sleeve is brought into contact with the surface of the PC Drum to let an even amount of toner stick to the PC Drum.

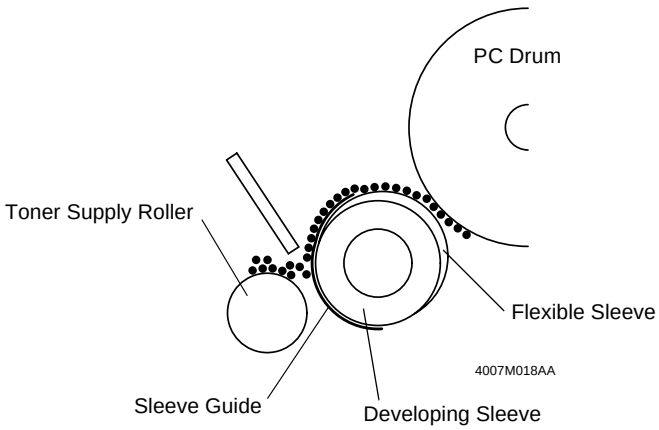

9-3. Developing Bias

- A bias voltage is applied to the Developing Sleeve and Toner Regulator Blades to charge the toner.
- A bias voltage is also applied to the Bias Seal to prevent toner left on the Sleeve Roller after development from falling down over the areas inside the copier.
- The amount of toner sticking to the surface of the PC Drum varies according to the potential difference between the voltage on the surface of the PC Drum (Vi) and that on the surface of the Sleeve Roller (Vb).
- The greater the potential difference, the more the amount of toner.

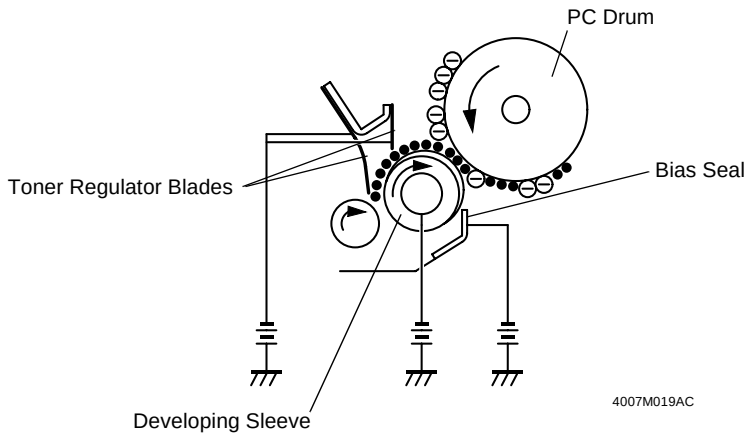

	CONTROL SIGNAL	ON	OFF	WIRING DIAGRAM
Developing Bias	PWB-A PJ4A-7	L	H	1-F
Toner Regulator Blades				
Bias Seal				

9-4. Toner Empty Detection

- An LED and sensor are used to detect a toner-empty condition.

1. Light from the LED strikes the inside of the I/C through the LED Window.
2. The Toner Agitating Blade turns to scrape toner off the surface of the LED Window.
3. The light emitted by the LED is reflected by the Reflecting Mirror to reach the sensor.
4. The amount of toner in the I/C changes the number of times (or the period of time) through which the light from the LED reaches the sensor.
5. The light that reaches the sensor is translated to a corresponding voltage value.
6. If the sensor detects a voltage of 2.0 V or less twice while the Toner Agitating Blade turns five revolutions, the copier considers that it is a toner-near-empty condition.
7. If the sensor detects a voltage of 2.0 V or less three consecutive times while the Toner Agitating Blade turns five revolutions, or if it continues detecting a voltage of 2.0 V or less even after one revolution of the Toner Agitating Blade, the copier considers that it is a toner-empty condition.

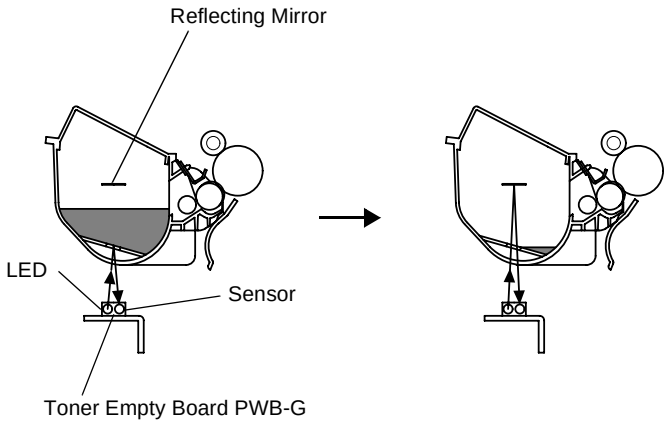

4007M020AA

	CONTROL SIGNAL	ON	OFF	WIRING DIAGRAM
PWB-G	PWB-A PJ10A-6	Analog Input		2-D

10. PAPER TAKE-UP/FEEDING SECTION

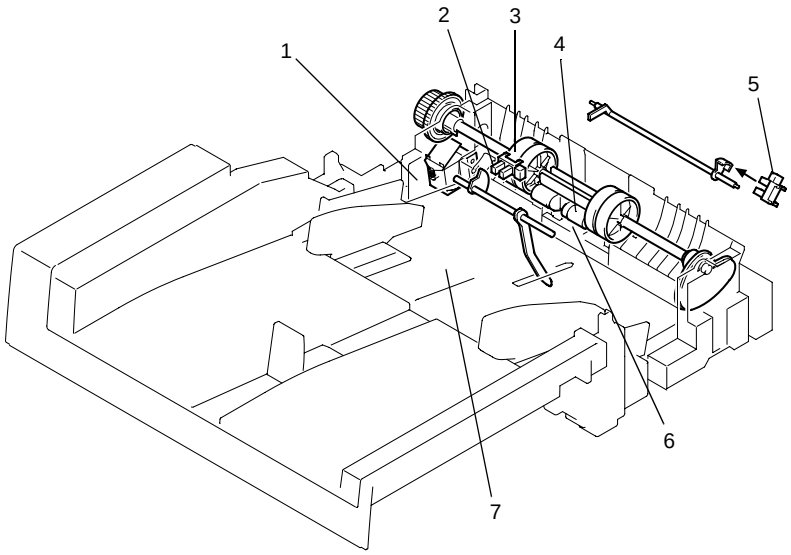

4007M011AB

1. Paper Take-Up Solenoid SL1
2. Paper Empty Sensor PS4
3. Feed Roll
4. Paper Take-Up Roll
5. Paper Take-Up Sensor PS1
6. Separator Pad
7. Paper Lifting Plate

10-1. Paper Empty Detection Mechanism

The Paper Empty Sensor detects a paper-empty condition in the Paper Tray.

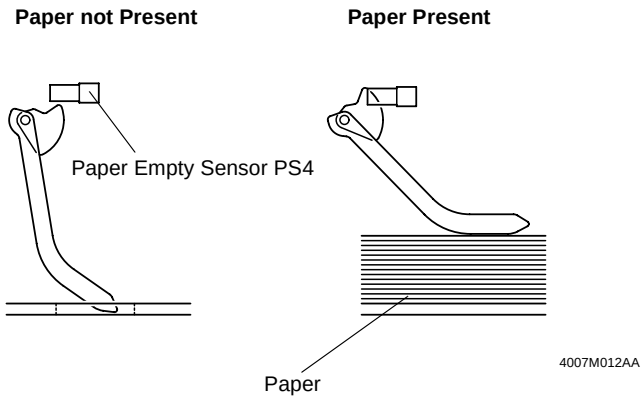

	CONTROL SIGNAL	Blocked	Unblocked	WIRING DIAGRAM
PS4	PWB-A PJ10A-3	H	L	1-I

10-2. Paper Lifting Mechanism

The paper lifting mechanism raises the paper stack in the tray to press it up against the Paper Take-Up Roll.

The Start key is pressed.
↓
The Main Motor is energized.
↓
The Paper Take-Up Solenoid is energized.
↓
The cam turns and the Paper Lifting Lever goes up.
↓
The Paper Take-Up Roll turns to take up and feed one sheet of paper.
↓
The cam turns and the Paper Lifting Lever goes down.

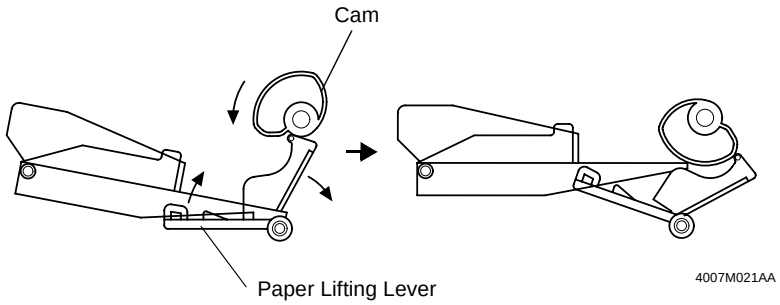

10-3. Paper Take-Up Mechanism

Drive for the paper take-up sequence is transmitted via the Paper Take-Up Clutch and Paper Take-Up Solenoid from a motor.

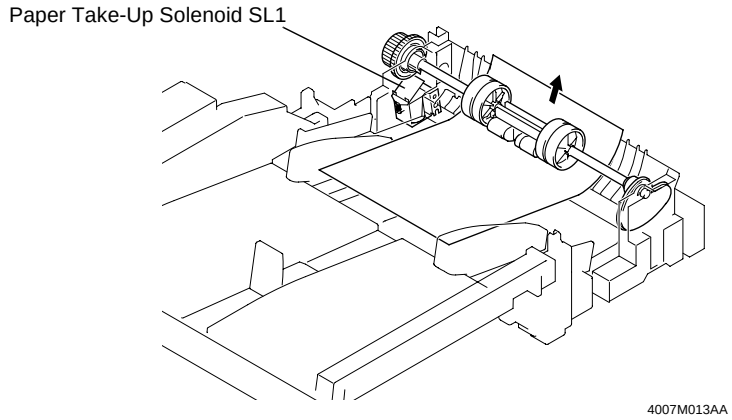

10-4. Paper Take-Up Control

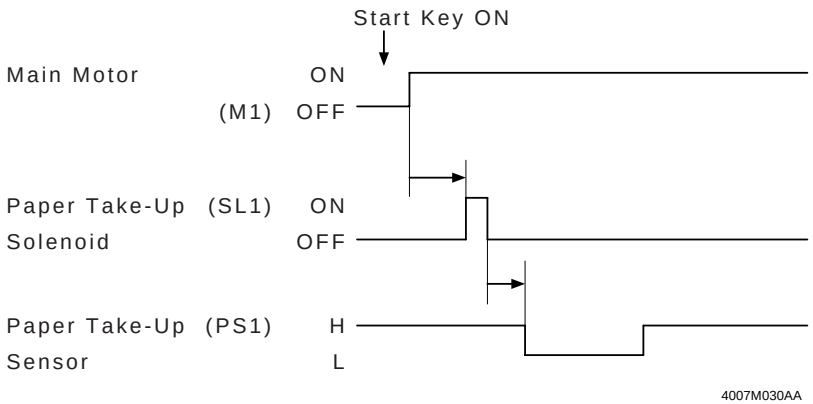

	CONTROL SIGNAL	ON	OFF	WIRING DIAGRAM
SL1	PWB-A PJ3A-2	L	H	1-G

	CONTROL SIGNAL	ON	OFF	WIRING DIAGRAM
PS1	PWB-A PJ8A-3	L	H	1-H

(1) Paper Take-Up Retry Control

To minimize the occurrence of a paper misfeed, the paper take-up sequence is temporarily halted if the paper fails to reach the Paper Take-Up Sensor within a given period of time after the sequence has been started. The paper take-up sequence is then performed again. These paper take-up sequences are repeated a given number of times.

	No. of Paper Take-Up Retry Sequences
Paper Take-Up Retry	1

11. PC DRUM CLEANING SECTION

- Toner that is left on the surface of the PC Drum after image transfer will be scraped off by the Cleaning Blade and conveyed by the Toner Conveying Screw to the Toner Collecting Box. The Toner Antispill Mylar prevents toner scraped off the surface of the PC Drum from falling over the areas inside the copier.
- The Paper Separator Fingers mechanically separate paper from the surface of the PC Drum after image transfer.

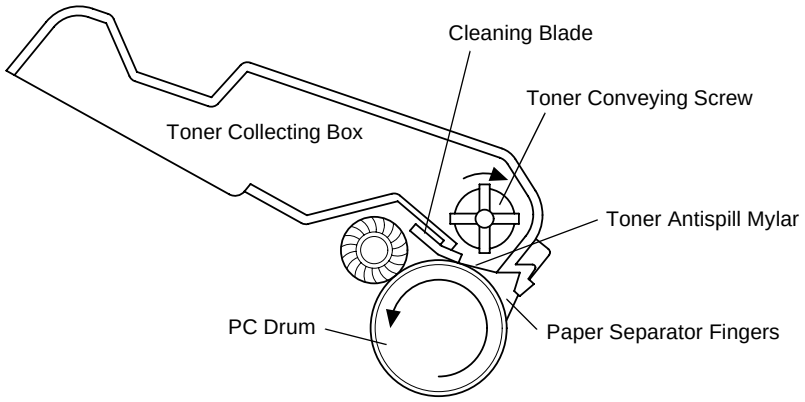

4007M022AA

12. IMAGE TRANSFER SECTION

- A positive voltage is applied to the Image Transfer Roller to transfer the toner image on the surface of the PC Drum to the paper.
- The voltage applied to the Image Transfer Roller varies according to the copy image (B/W ratio) or paper size.

B/W Ratio	Paper Size	Image Transfer Output
Low	Small	Great
High	Large	Small

- The Discharge Needle neutralizes residual potential in the paper after image transfer.
- A negative voltage is applied to the Image Transfer Roller after image transfer so that toner sticking to its surface may be returned to the PC Drum for cleaning of the Image Transfer Roller.

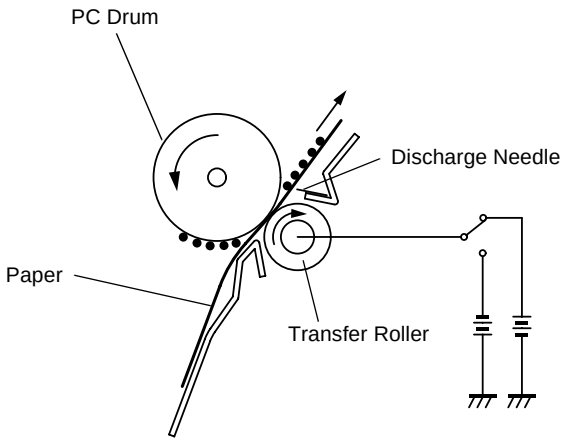

4007M031AA

	CONTROL SIGNAL	ON	OFF	WIRING DIAGRAM
Image Transfer Corona (+)	PWB-A PJ4A-4	L	H	2-E

	CONTROL SIGNAL	ON	OFF	WIRING DIAGRAM
Image Transfer Corona (-)	PWB-A PJ4A-4	H	H	2-E
	PWB-A PJ4A-8	L	H	

13. FUSING UNIT SECTION

The Fusing Unit fixes permanently the developed image to the paper by applying heat and pressure to the toner and paper.

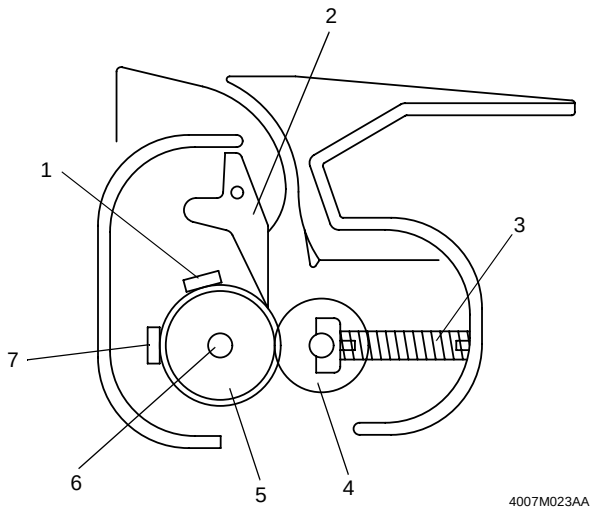

1. Thermoswitch TS1
2. Paper Separator Finger
3. Pressure Spring
4. Fusing Backup Roller
5. Fusing Roller
6. Fusing Heater Lamp H1
7. Thermistor TH1

13-1. Fusing Unit Drive Mechanism

The Fusing Unit is driven by a motor.

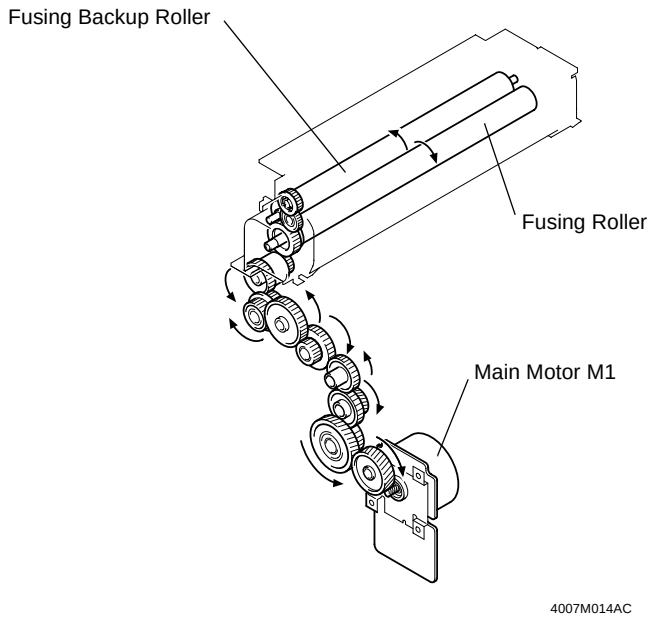

13-2. Fusing Rollers Pressure Mechanism

To ensure that there is a given width of nip between the Fusing Roller and Fusing Backup Roller, pressure springs are installed at the front and rear ends of the Backup Roller. These springs exert a pressure to press the Backup Roller against the Fusing Roller.

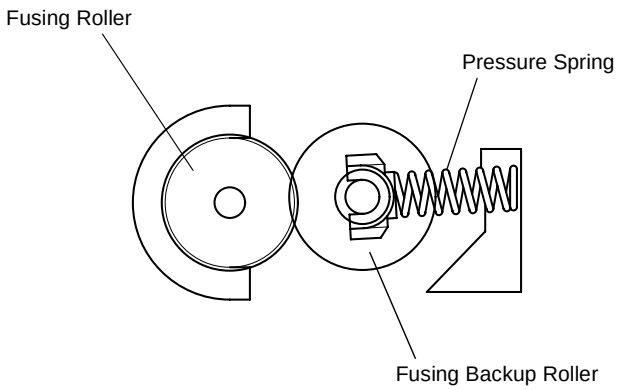

4007M024AA

13-3. Fusing Temperature Control

- The Fusing Roller Heater Lamp is turned ON and OFF to keep a set temperature on the surface of the Fusing Roller.
- The Fusing Roller surface temperature is detected by using a thermistor that translates the temperature to a corresponding electrical signal.
- If the Fusing Roller temperature becomes excessively high, the Fusing Heater Lamp is shut down.

Part Name	Symbol	Function
Fusing Heater Lamp	H1	• Turns ON during the warm-up cycle. • Turns ON during a copy cycle. • Turns ON in the standby state.
Thermistor	TH1	• Detects the surface temperature of the Fusing Roller. • Controls the Fusing Heater Lamp to turn ON and OFF.
Thermoswitch	TS1	• Detects the surface temperature of the Fusing Roller. • Cuts off power when the temperature of the Fusing Roller becomes inordinately high.

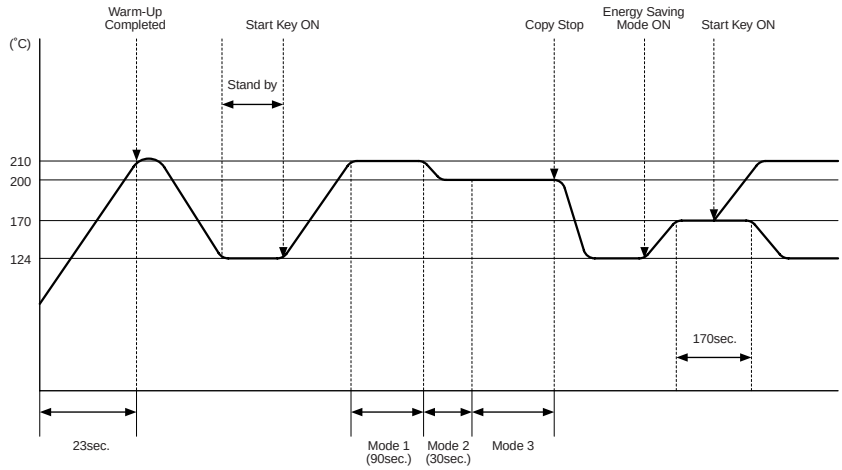

4007M027CA

Conditions	Mode 1	Mode 2	Mode 3
Plain Paper	210 °C (90 s)	210 °C→200 °C (30 s)	200 °C
Thick Paper	210 °C		
In standby state	124 °C		
In Power Save mode	170 °C		

	CONTROL SIGNAL	ON	OFF	WIRING DIAGRAM
H1	PWB-A PJ14A-3	L	H	2-B

	CONTROL SIGNAL	Low Temp. ◄► High Temp.	WIRING DIAGRAM
TH1	PWB-A PJ2A-1	Analog Input	1-B

(1) Fusing Temperature Control during continuous small-size paper feeding

- If paper of a small size is continuously fed through the copier in the Thick Paper mode, the temperature on the edges of the Fusing Roller will rise. When paper of a large size is next fed through the copier, offset can at times occur at the areas on the copy equivalent to the high temperature zones of the Fusing Roller.
- The copying speed is then decreased from 15 copies/min. to 9 copies/min. to allow a greater interval between sheets of paper, thereby preventing the temperature on the ends of the Fusing Roller from rising.
- This control is provided when 10 or more copies are made continuously in the Thick Paper mode.

13-4. Mechanism and Control of Fusing Roller Small-Amount Turning

- If the Fusing Roller is kept stationary in temperature controlled state, the temperature of only the nip becomes inordinately high due to heat and pressure, which tends to cause the paper to be wavy.
- Immediately after the Start key has been pressed, the Main Motor is energized to move the Fusing Roller a half turn.
- Whether to provide this control or not can be selected with “C3 Predrive” of Tech. Rep. Choice.

14. OTHER MECHANISMS

14-1. Memory Backup

EEPROM (U21) connected to the Control Board PWB-I stores the setting/adjustment values set in the Tech. Rep. modes as well as the counter counts.

IMPORTANT
It should also be noted that the EEPROM (U21) should not be replaced at the same time when the Control Board is replaced.

14-2. Cooling Mechanism

(1) PH Section Cooling Mechanism

The PH Section Cooling Fan Motor discharges heat to the outside of the copier to prevent the temperature of the PH Section from rising inordinately.

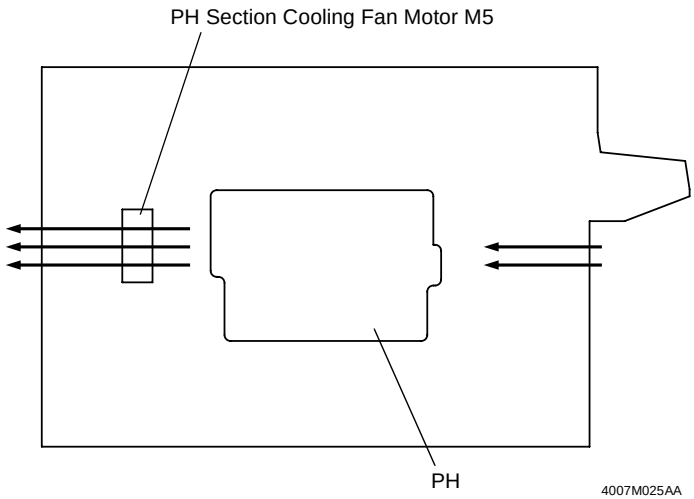

	CONTROL SIGNAL	ON	OFF	WIRING DIAGRAM
M5	PWB-A PJ13A-1	L	H	4-A

(2) Fusing Section Cooling Mechanism

The Fusing Section Cooling Fan Motor discharges heat generated by the Fusing Unit to the outside of the copier to prevent the temperature of the copier interior from rising inordinately. It also functions to draw paper being transported down onto the Suction Deck.

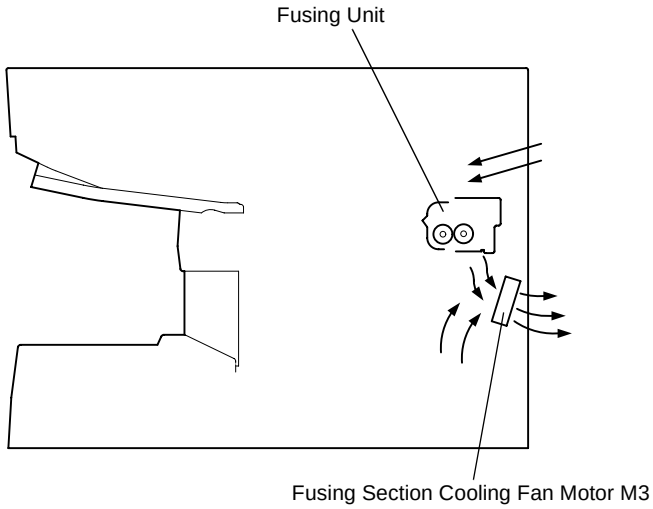

	CONTROL SIGNAL	ON	OFF	WIRING DIAGRAM
M3	PWB-A PJ14A-1	L	H	1-A



Copyright
2000 MINOLTA Co., Ltd.
Printed in Japan

Use of this manual should be strictly supervised to avoid disclosure of confidential information.

MINOLTA Co., Ltd.

4007-7990-11 00051800
14413