MINOLTA

Parts Catalog

The essentials of imaging

Di183

PREFACE

1. The part numbers listed in Parts Catalog are those which were assigned to the parts making up the machine at the time machine was originally introduced onto the market.

2. Parts whose INDEX numbers are shown white against a black background in the illustration are those to be used in only certain market areas. These part numbers are given in the lower half part of the list section. Check the SFIX No. listed in SFIX CHART on page II to find which part number is applicable to your own area.

3. Parts whose INDEX numbers are shown black against a white background in the illustration are those to be used in all market areas. These parts are listed on the upper half part of the list section.

4. If "NS" follows a part number given in the list section, it indicates that we do not keep a stock of the part. The part is not required for ordinary service jobs, either.

5. If "RP" is shown in the REC column of the list section, it indicates that the part is functionally important.

6. In the exploded views in this Parts Catalog the parts (Screws & Washes, etc...) which are indicated with a "four-digit" numbers are listed in numerical order in the section "SCREWS AND WASHERS". Please check these "four-digit" numbers with the part numbers ("ten-digit" numbers) which should be used for ordering the part.

7. All part numbers consist of "ten-digit" which should all be quoted when ordering a part. The price of parts can be obtained by referring to the "Parts Price List" which is separately issued.

8. All infomation contained in this Parts Catalog is subject to change.

SFIX CHART

SFIX No.	COUNTRY	VOLTAGE	FREQUENCY (Hz)	PAPER SIZE	SFIX No.	COUNTRY	VOLTAGE	FREQUENCY (Hz)	PAPER SIZE
211	EUROPE	200-240V	50Hz	METRIC	219	CHINA	220V	50Hz	METRIC
212	S AFRICA/AUSTRALIA/S ARABIA/HONG KONG	200-240V	50-60Hz	METRIC	311	USA/CANADA	120V	60Hz	INCH
214	PHILIPPINE/L AMERICA	200-240V	50-60Hz	INCH	313	TAIWAN	110V	60Hz	METRIC
218	KOREA	220V	60Hz	METRIC	314	S ARABIA/CURACAO/ BRAZIL	120-127V	60Hz	METRIC

CONTENTS

1. ORIGINAL COVER ••••••

1 ORIGINAL COVER

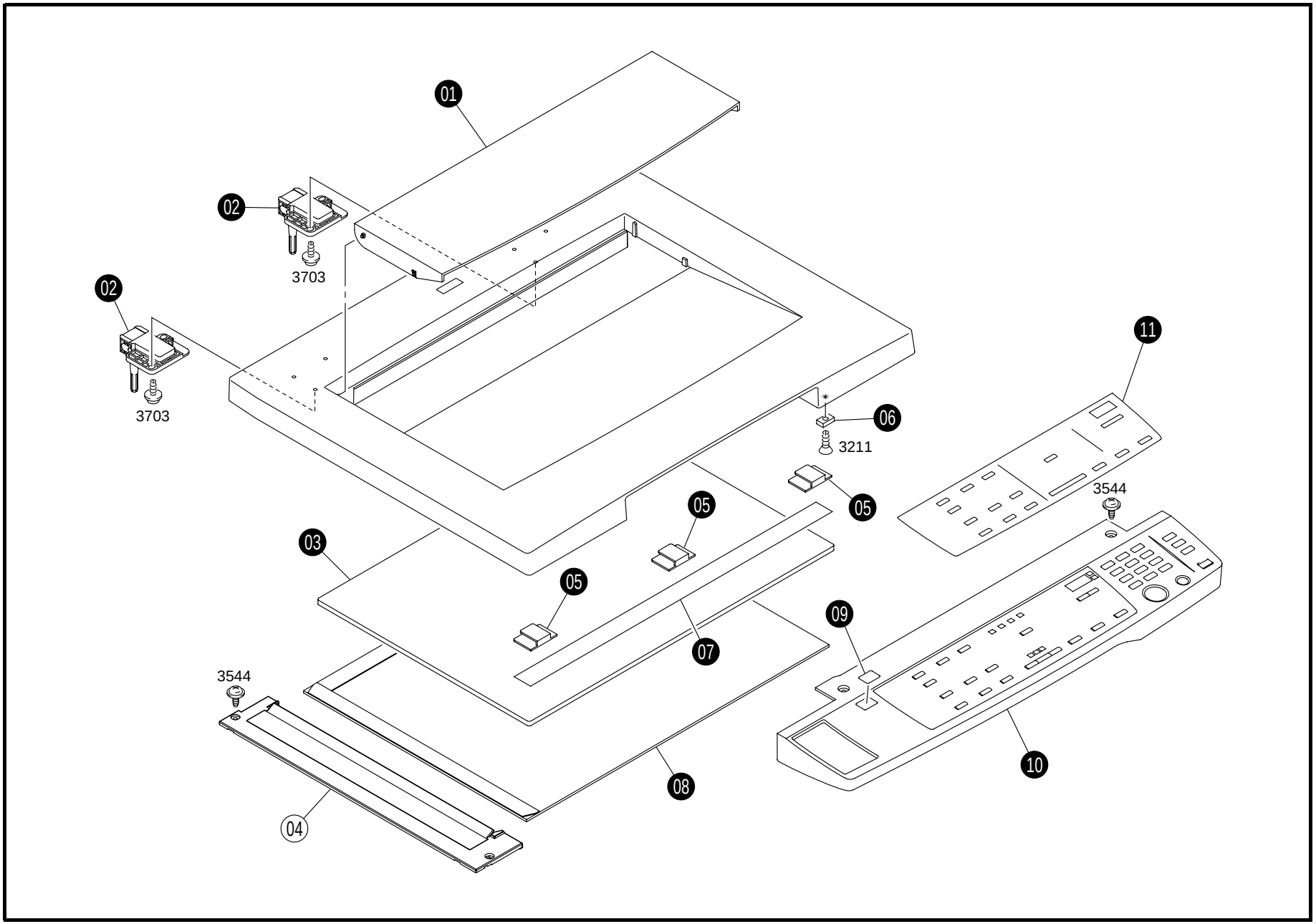

INDEX	PART NO.	PART NAME	REC	QTY	INDEX	PART NO.	PART NAME	REC	QTY
04	4506-1008-01	COVER		1					

INDEX	PART NO.	PART NAME	REC	QTY	SFIX
01	4002-1603-01	HOLDER		1	219
01	4002-1603-01	HOLDER OPTION		1	211, 212, 214, 218, 311, 313, 314
02	1139-1705-01	HINGE		2	219
02	1139-1705-01	HINGE OPTION		2	211, 212, 214, 218, 311, 313, 314
03	1139-1704-14	PAD		1	219
03	1139-1704-14	PAD OPTION		1	211, 212, 214, 218, 311, 313, 314
05	1139-1703-02	SLIDER		3	219
05	1139-1703-02	SLIDER OPTION		3	211, 212, 214, 218, 311, 313, 314
06	9326-2820-11	MAGNET		1	219
06	9326-2820-11	MAGNET OPTION		1	211, 212, 214, 218, 311, 313, 314
07	1139-1706-01	POLYESTER FILM		1	219
07	1139-1706-01	POLYESTER FILM OPTION		1	211, 212, 214, 218, 311, 313, 314
08	4506-1010-01	ORIGINAL GLASS ASSY		1	214, 311
08	4506-1011-01	ORIGINAL GLASS ASSY		1	211, 212, 218, 219, 313, 314
09	4021-7312-01	LABEL		1	311
10	4021-6052-04	CONTROL PANEL ASSY	RP	1	212, 214, 218, 219, 311, 313, 314
10	4021-6053-04	CONTROL PANEL ASSY	RP	1	211
11	4021-1201-02	PANEL SHEET		1	214, 311
11	4021-1202-02	PANEL SHEET		1	212, 313, 314
11	4021-1203-01	PANEL SHEET		1	219
11	4021-1204-01	PANEL SHEET		1	218

2 HOUSING

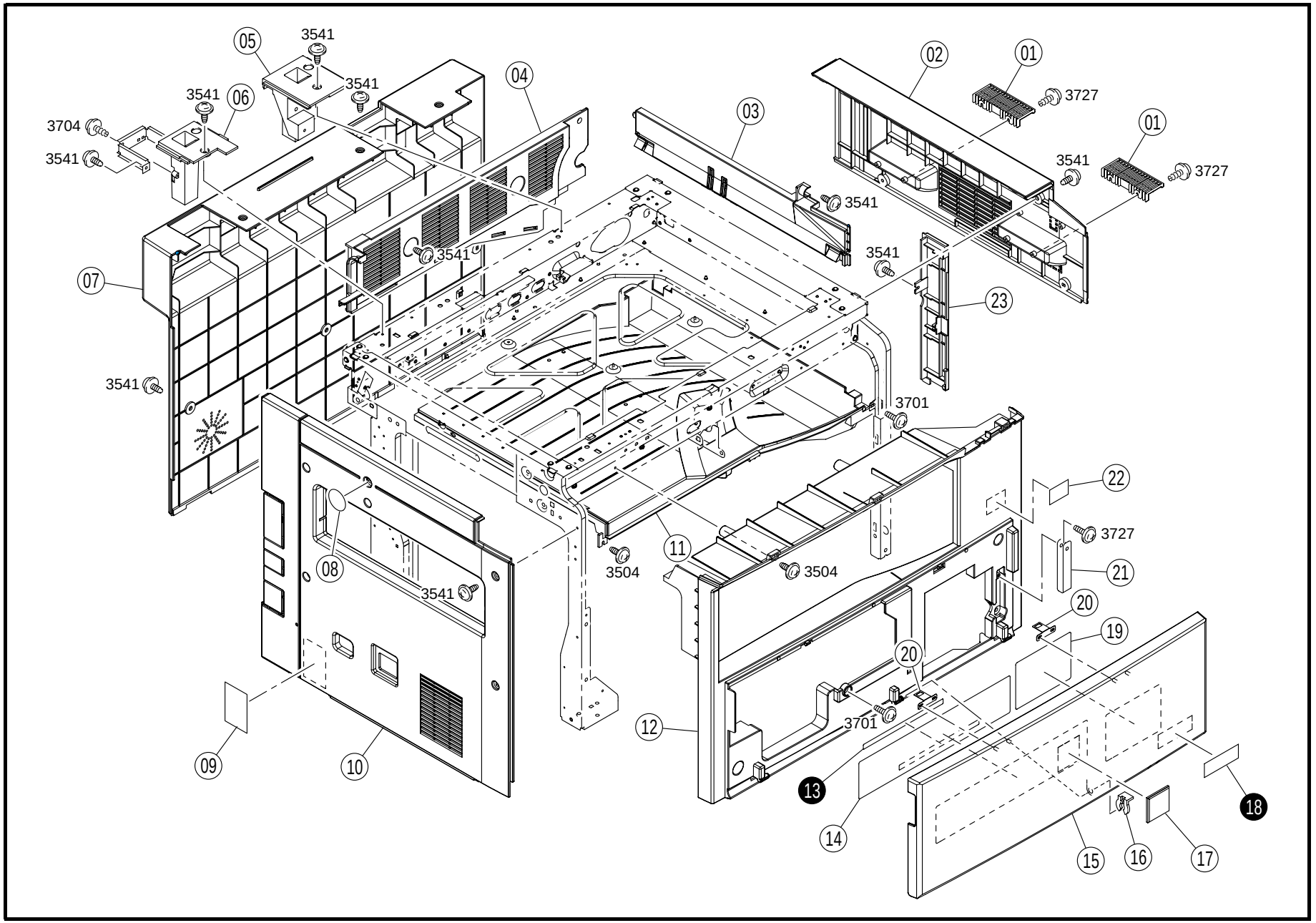
05
3541
3541
3541
06
3704
3541
04
02
01
3727
03
01
3727
3541
3541
3541
07
23
3541
3701
22
3727
11
3504
3504
21
08
3541
20
19
20
3701
12
09
10
13
14
15
16
17
18

INDEX	PART NO.	PART NAME	REC	QTY	INDEX	PART NO.	PART NAME	REC	QTY
01	4021-1011-01	HANDLE		2	21	4120-1014-02	BAND		1
02	4021-1003-02	COVER		1	22	4011-7309-01	LABEL		1
03	4021-1017-02	COVER		1	23	4021-1010-01	COVER		1
04	4021-1015-04	COVER		1					
05	4021-1307-03	HOLDER		1					
06	4021-1308-01	HOLDER		1					
07	4021-1005-03	REAR COVER		1					
08	4021-7603-01	SEAL		1					
09	4004-7402-01	LABEL		1					
10	4021-1004-04	LEFT COVER		1					
11	4021-1014-02	TRAY		1					
12	4021-1002-04	COVER		1					
14	4021-7301-01	LABEL		1					
15	4021-1001-03	COVER		1					
16	1033-4402-01	STOPPER RING		1					
17	4002-7305-01	LABEL		1					
19	4011-7311-01	LABEL		1					
20	4021-1009-01	REINFORCE PLATE		2					

INDEX	PART NO.	PART NAME	REC	QTY	SFIX
13	4021-7314-01	LABEL		1	212, 214, 218, 219, 311, 313, 314
13	4021-7315-01	LABEL		1	211
18	4011-7322-01	LABEL		1	311
18	4021-7306-01	LABEL		1	211, 212, 214, 218, 219, 313, 314

3 FRAMES

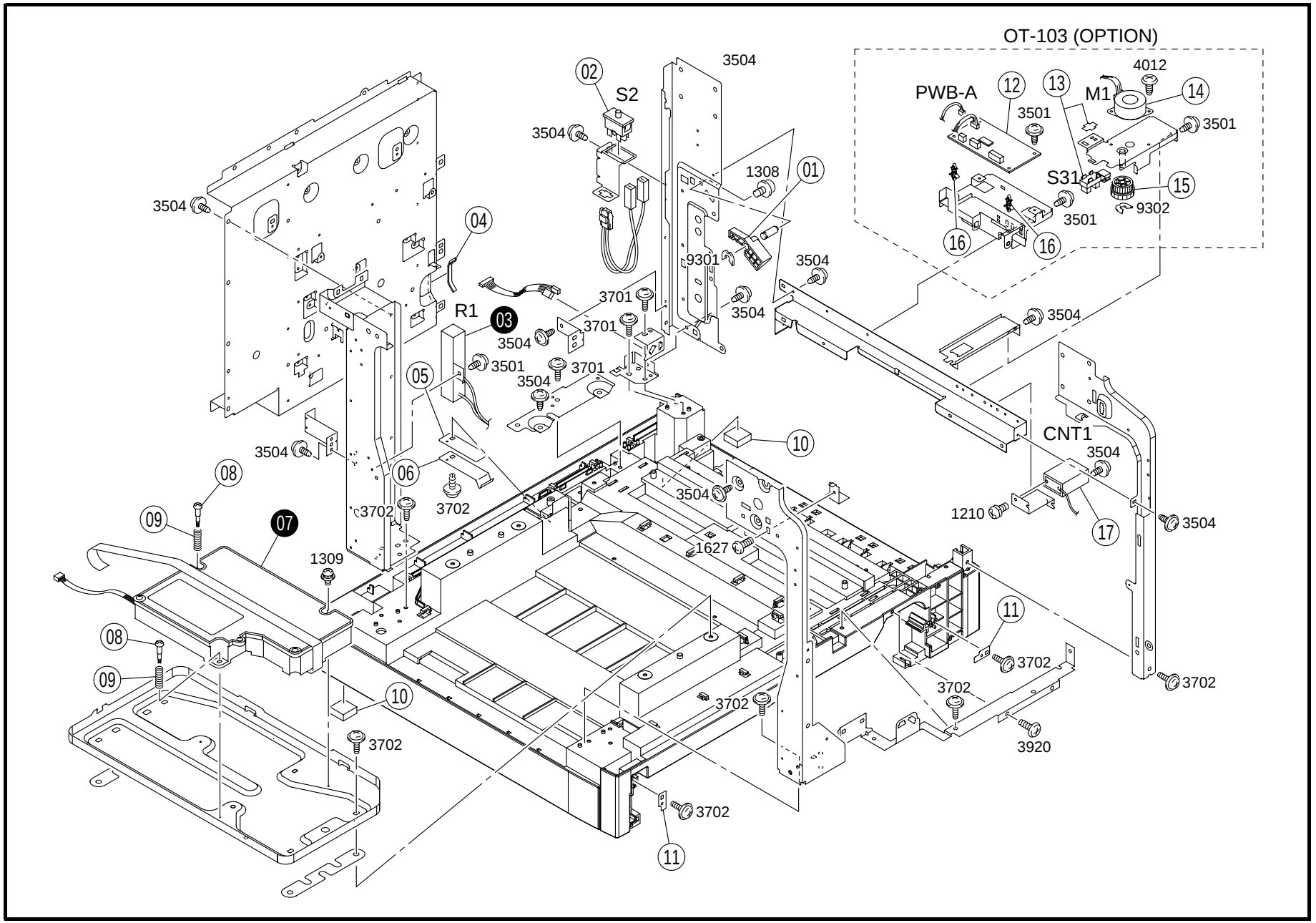
OT-103 (OPTION)
PWB-A
M1
S31
S2
R1
CNT1
3504
3501
3701
3702
4012
9302
9301
1308
1309
1627
1210
3920
01
02
03
04
05
06
07
08
09
10
11
12
13
14
15
16
17

INDEX	PART NO.	PART NAME	REC	QTY
01	4021-2009-02	LEVER		1
02	9332-1710-41	SWITCH SAFETY (S2)		1
04	4021-2210-01	SEAL		1
05	4021-3011-01	PLATE SPRING		1
06	4021-3005-01	PLATE SPRING		1
08	4128-1979-01	SHOULDER SCREW		2
09	4128-1978-01	PRESSURE SPRING		2
10	4156-3826-01	RUBBER FOOT		2
11	4686-3304-01	STOPPER		2
12	4690-0101-01	PWB ASSY (PWB-A)	RP	1
13	4686-0901-01	PHOTO INTERRUPTER HOME (S31)		1
14	9314-1100-31	MOTOR SHIFT DRIVE (M1)		1
15	4690-2401-01	GEAR		1
16	9384-1900-56	PWB SUPPORT 6.35H		2
17	9323-1410-11	COUNTER OPTION		1

INDEX	PART NO.	PART NAME	REC	QTY	SFIX
03	9459-1807-01	RESISTOR (R1)		1	211, 212, 214, 218, 219
07	4021-0531-03	P/H ASSY		1	211, 212, 214, 219, 311, 313, 314
07	4021-0533-01	P/H ASSY		1	218

4 IR UNIT (A)

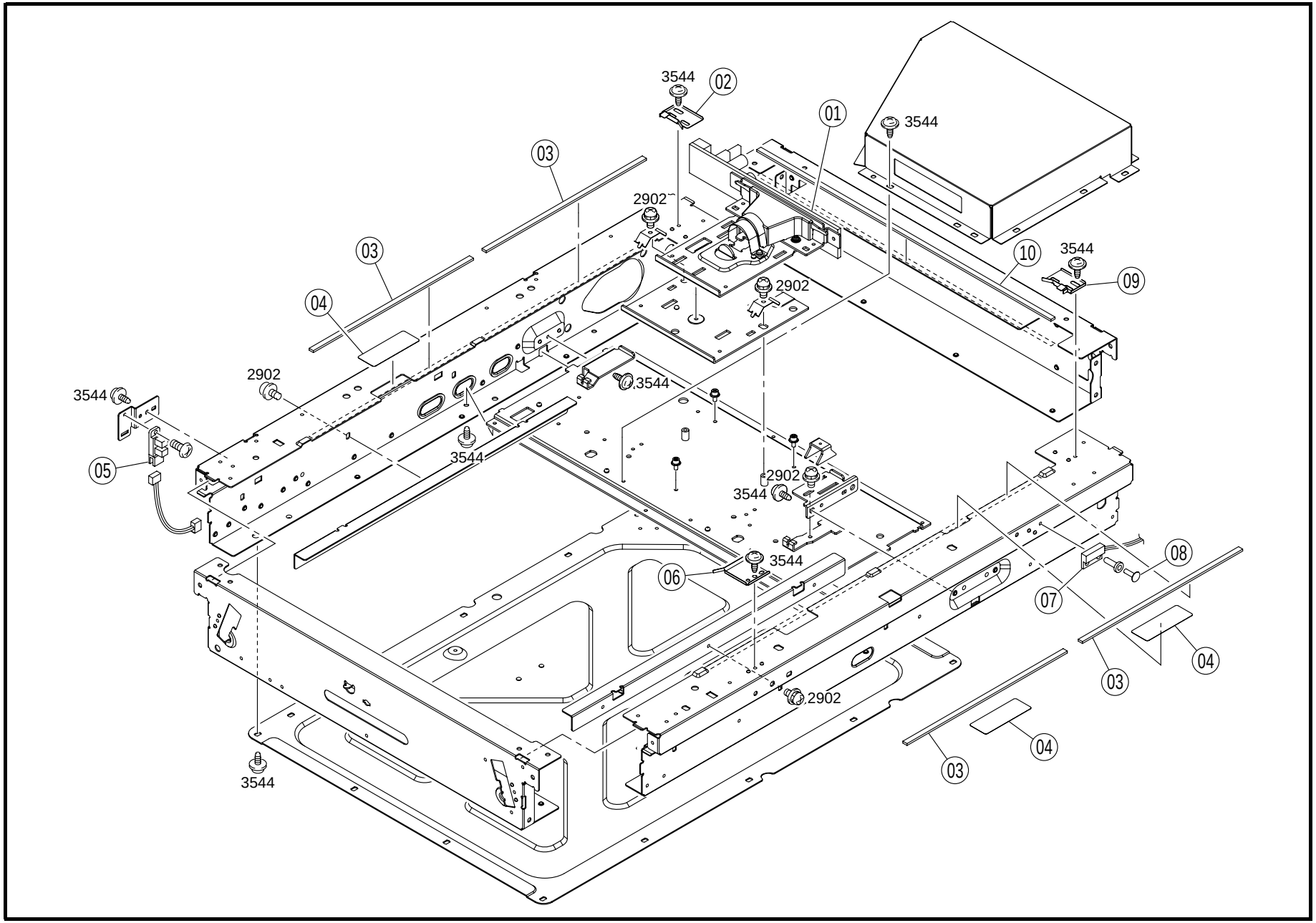
3544
02
01
3544
03
2902
03
10
3544
09
04
2902
2902
3544
3544
05
3544
2902
3544
3544
06
08
07
04
03
2902
04
03
3544

INDEX	PART NO.	PART NAME	REC	QTY	INDEX	PART NO.	PART NAME	REC	QTY
01	4506-1026-01	CCD UNIT		1					
02	4506-1007-01	SET PLATE		1					
03	4506-1003-01	CUSHION		4					
04	4506-1038-01	SEAL		3					
05	4506-1001-01	PHOTO INTERRUPTER		1					
06	4506-1005-01	SET PLATE		1					
07	4647-1039-01	MAGNETIC SW		1					
08	4506-1002-01	PIN		1					
09	4506-1006-01	SET PLATE		1					
10	4506-1004-01	CUSHION		1					

INDEX	PART NO.	PART NAME	REC	QTY	SFIX

5 IR UNIT (B)

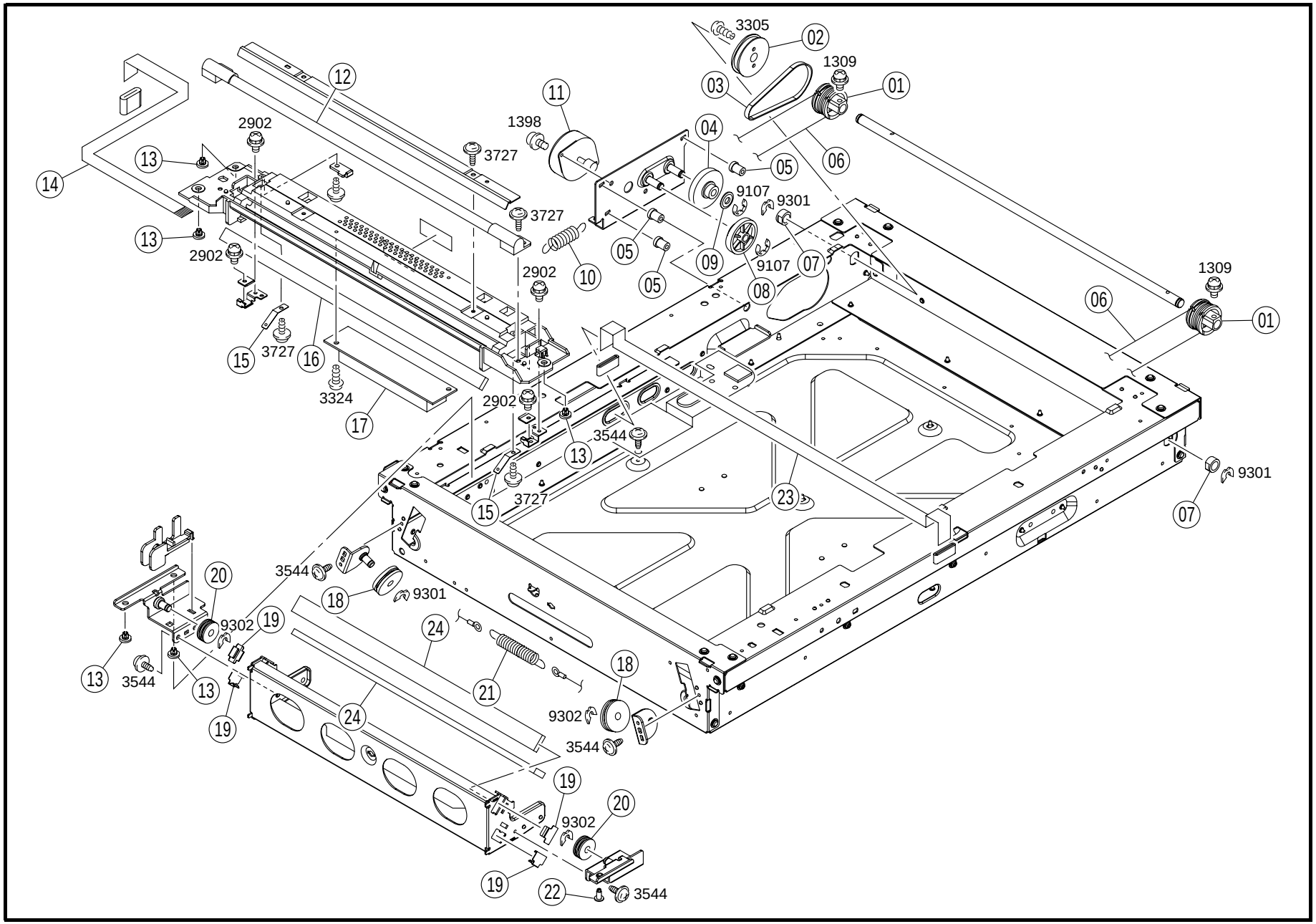
3305
02
1309
01
03
12
11
1398
04
2902
13
3727
05
06
14
9107
9301
3727
13
05
09
9107
07
2902
10
05
08
1309
06
01
15
3727
16
3324
2902
17
3544
13
9301
15
3727
23
07
20
3544
18
9301
9302
19
24
13
3544
13
21
18
19
24
9302
3544
19
20
9302
19
22
3544

INDEX	PART NO.	PART NAME	REC	QTY
01	4506-1015-01	PULLEY		2
02	4506-1018-01	PULLEY		1
03	4506-1022-01	TIMING BELT		1
04	4506-1024-01	GEAR		1
05	4506-1016-01	CUSHION		3
06	4506-1013-01	WIRE		2
07	4506-1021-01	BUSHING		2
08	4506-1017-01	GEAR		1
09	4506-1025-01	SPACER		1
10	4506-1019-01	TENSION SPRING		1
11	4506-1014-01	MOTOR		1
12	4506-1034-01	LAMP	RP	1
13	4506-1032-01	BUSHING		5
14	4506-1028-01	WIRE HARNESS ASSY		1
15	4506-1037-01	HOLER		2
16	4506-1036-01	MIRROR		1
17	4506-1035-01	INVERTER	RP	1
18	4506-1023-01	PULLEY		2
19	4506-1031-01	SET PLATE		1
20	4506-1030-01	PULLEY		2
21	4506-1020-01	TENSION SPRING		1
22	4506-1033-01	SHOULDER SCREW		1
23	4506-1027-01	WIRE HARNESS ASSY		1
24	4506-1029-01	MIRROR		2

INDEX	PART NO.	PART NAME	REC	QTY	SFIX

6 HOPPER SECTION

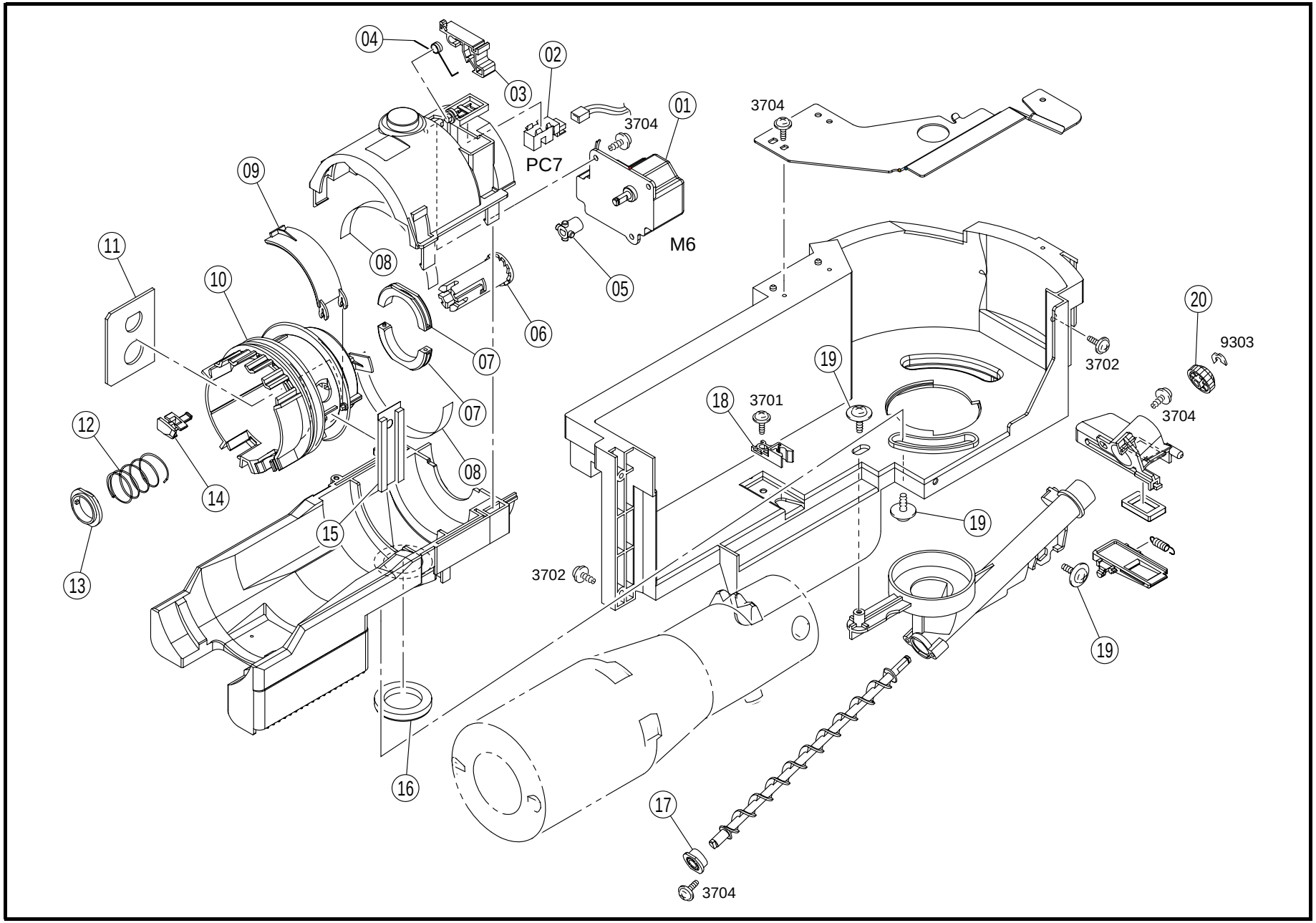

INDEX	PART NO.	PART NAME			REC	QTY
01	9312-1100-11	MOTOR	TONER	(M6)		1
02	4611-6301-01	PHOTO INTERRUPTER	HOME	(PC7)		1
03	4021-5314-01	LEVER				1
04	1139-5022-01	TORSION SPRING				1
05	4021-5315-01	PIN				1
06	1165-5326-02	SHAFT				1
07	1151-5023-01	SUPPORT				2
08	1139-5026-01	POLYESTER FILM				2
09	4021-5303-01	SHUTTER				1
10	4021-5310-01	COUPLING				1
11	1174-5010-01	SHEEL				1
12	1151-5033-02	PRESSURE SPRING				1
13	1151-5032-01	COLLAR				1
14	1139-5018-04	DETECTING PLATE				3
15	4021-5309-01	SEAL				1
16	4021-5316-02	SEAL				1
17	4163-5278-01	BUSHING				1
18	1139-5015-01	LOCK LEVER				1
19	4163-5293-01	SCREW				3
20	1139-5730-01	GEAR 18T				1

INDEX	PART NO.	PART NAME	REC	QTY	SFIX

7 IU RAIL SECTION

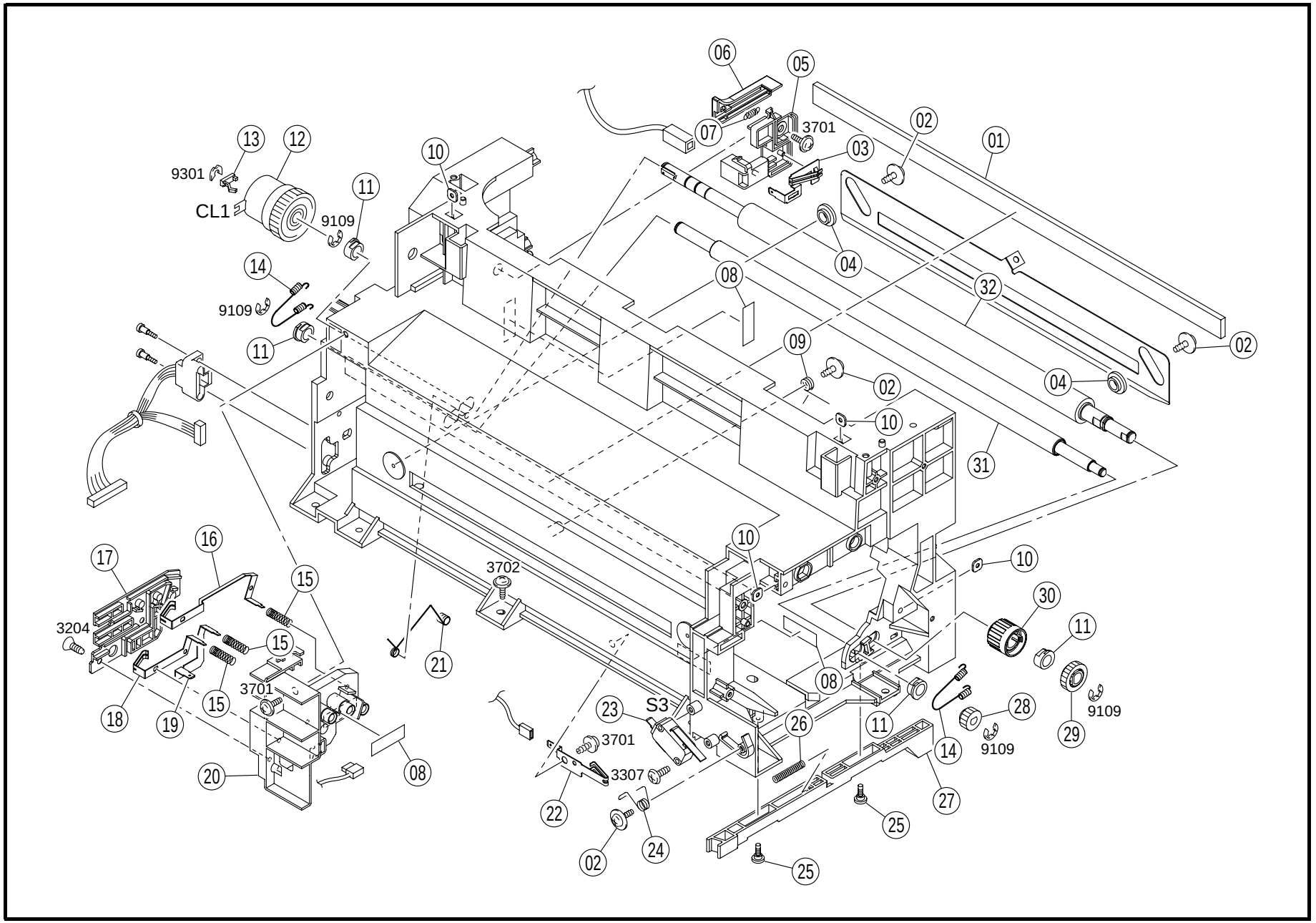

INDEX	PART NO.	PART NAME	REC	QTY
01	4021-2026-01	SEAL		1
02	4163-5293-01	SCREW		4
03	4021-2106-01	CONTACT		1
04	4021-2015-01	COLLAR		2
05	4021-2103-02	HOLDER		1
06	4021-4357-02	LEVER		1
07	4021-4369-01	TENSION SPRING		1
08	1129-7303-01	LABEL		3
09	4021-2023-01	TORSION SPRING		1
10	4002-5042-01	PLATE NUT		4
11	1164-3509-01	BUSHING		4
12	9322-1100-11	CLUTCH TIMING (CL1)		1
13	1149-3117-01	SPACER		1
14	4021-3513-01	TENSION SPRING		2
15	4021-2101-01	PRESSURE SPRING		3
16	4021-2107-01	CONTACT		1
17	4021-2111-02	COVER		1
18	4021-2109-01	CONTACT		1
19	4021-2108-01	CONTACT		1
20	4021-2104-04	HOLDER		1
21	4021-3514-01	CONTACT		1
22	4021-2110-01	CONTACT		1
23	9331-2710-11	MICRO SWITCH FRONT LOCK (S3)		1
24	4021-2208-03	TORSION SPRING		1
25	4021-2316-01	SHOULDER SCREW		2
26	4021-2308-01	PRESSURE SPRING		1
27	4021-2301-02	ARM		1
28	1164-3515-01	GEAR		1
29	1164-3508-01	GEAR		1
30	4021-3505-01	KNOB		1
31	4021-3507-01	ROLLER		1
32	4021-3506-02	ROLLER		1

INDEX	PART NO.	PART NAME	REC	QTY	SFIX

8 CHARGE UNIT

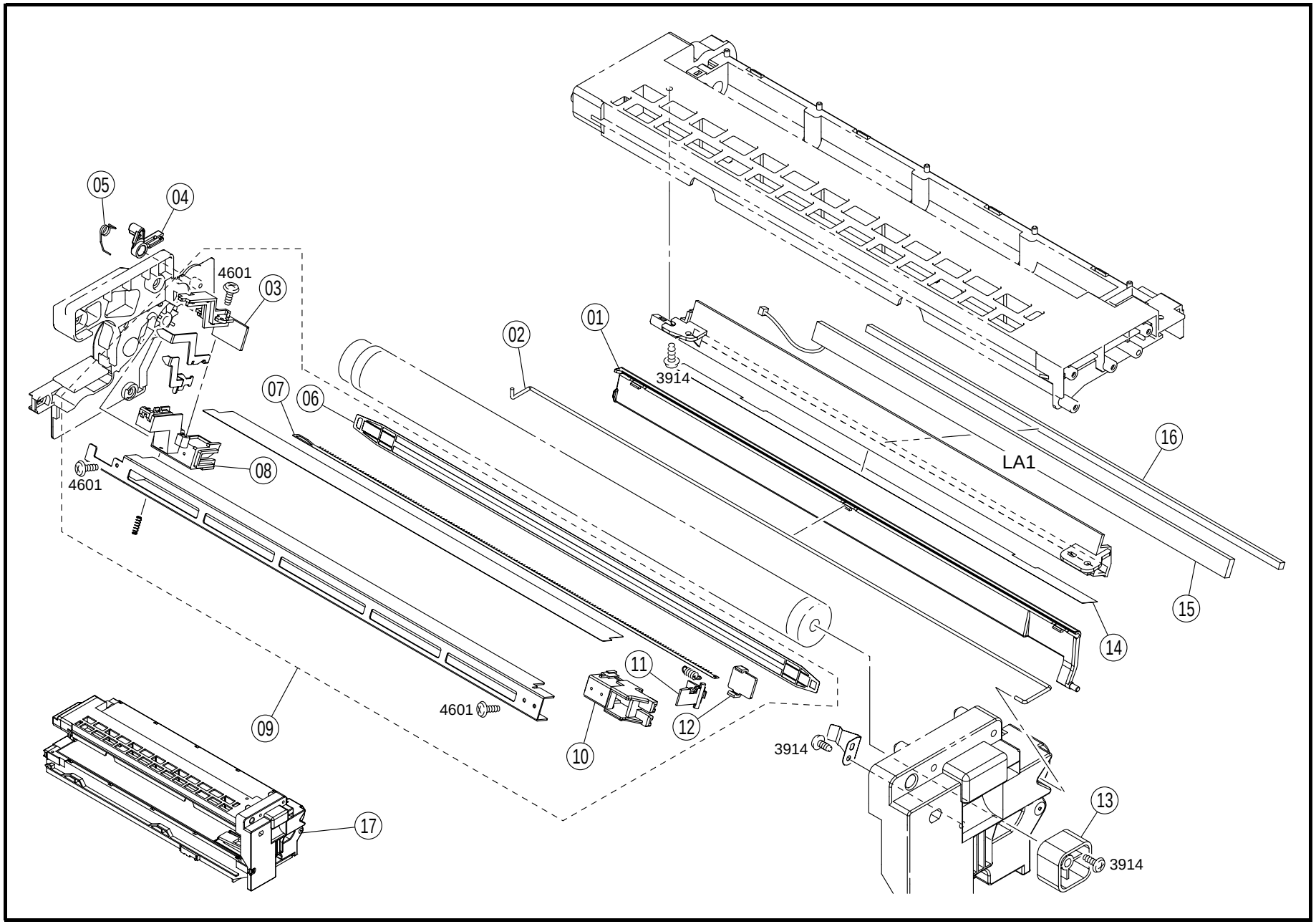

INDEX	PART NO.	PART NAME	REC	QTY	INDEX	PART NO.	PART NAME	REC	QTY
01	4021-4354-02	SHUTTER		1					
02	4021-4355-02	LEVER		1					
03	4021-4103-02	COVER		1					
04	4021-4356-03	LEVER		1					
05	4021-4358-01	TORSION SPRING		1					
06	4163-4104-02	GRID	RP	1					
07	4163-4103-01	ELECTRODE NEEDLE	RP	1					
08	4021-4102-02	HOLDER		1					
09	4021-0306-02	DRUM CHARGE UNIT	RP	1					
10	4021-4101-02	HOLDER		1					
11	4021-4107-01	LEVER		1					
12	4163-4106-01	COVER		1					
13	4021-4362-01	PIN	RP	1					
14	1165-4310-01	SEAL		1					
15	4021-6505-01	LED PILOT LAMP ERASER (LA1)	RP	1					
16	1165-4307-01	SEAL		1					
17	4021-0308-07	IU		1					

INDEX	PART NO.	PART NAME	REC	QTY	SFIX

9 DEVELOPING UNIT

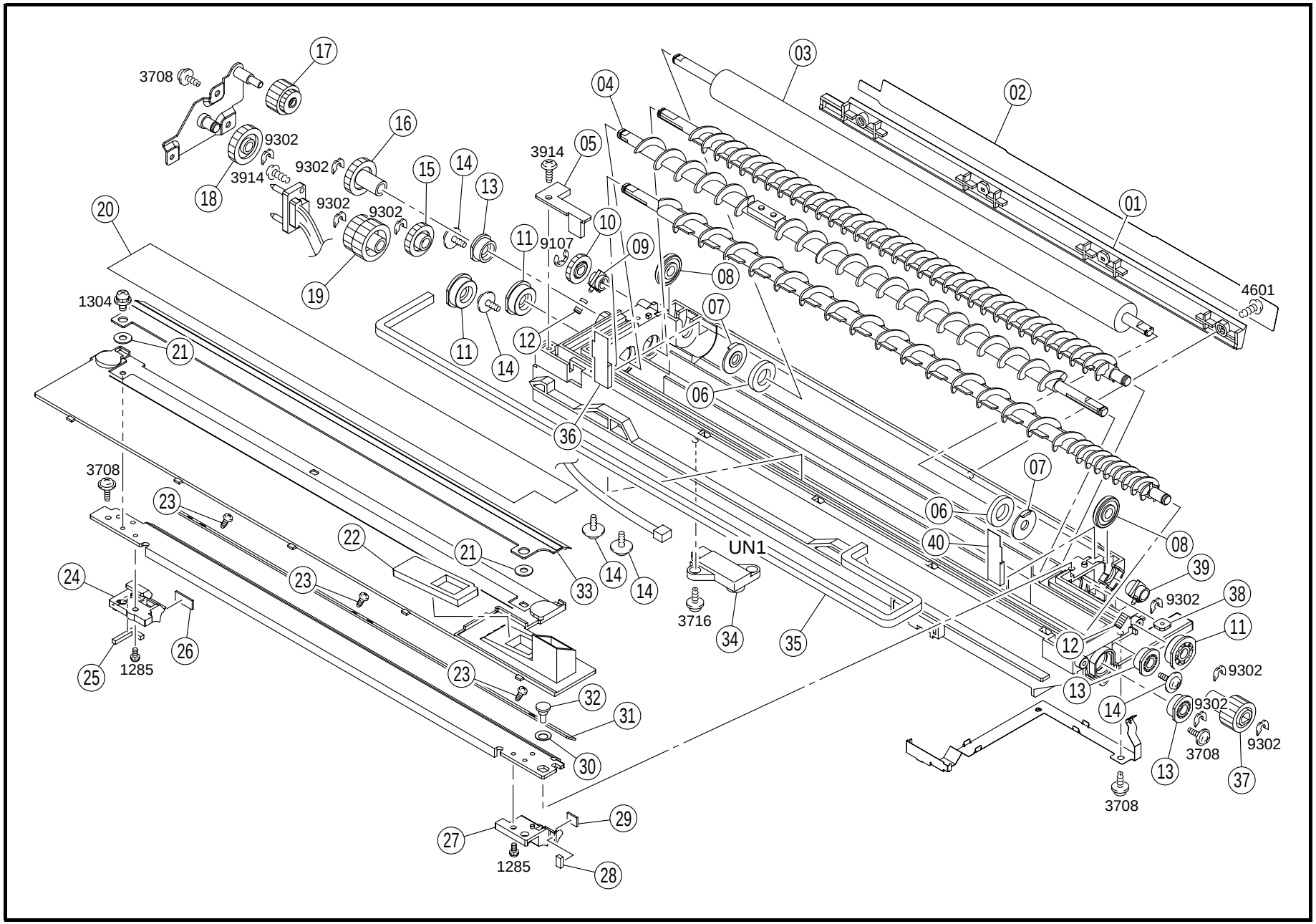

INDEX	PART NO.	PART NAME	REC	QTY	INDEX	PART NO.	PART NAME	REC	QTY
01	4021-5204-02	GUIDE		1	21	4021-5229-01	WASHER		2
02	4021-5222-01	SEAL	RP	1	22	4021-5203-03	SEAL		1
03	4163-5296-02	DEVELOPING ROLLER		1	23	4163-5271-01	SCREW		3
04	4021-0752-01	SCREW ASSY		1	24	4021-5221-01	GUIDE		1
05	4021-5226-01	COVER		1	25	4163-5229-02	SEAL		1
06	4021-5225-01	SEAL		2	26	4163-5245-01	MAGNET		1
07	4163-5226-01	HOLDER		2	27	4163-5272-01	GUIDE		1
08	4163-5298-01	ROLL		2	28	4163-5241-03	SEAL		1
09	4021-5231-01	BUSHING		1	29	4163-5244-01	MAGNET		1
10	4021-5232-01	GEAR		1	30	1139-5250-01	PLATE SPRING		1
11	4163-5277-01	BUSHING		3	31	4163-5217-01	REGULATING PLATE		1
12	4163-5231-02	PRESSURE SPRING		2	32	1139-5249-01	SHOULDER SCREW		1
13	4163-5278-01	BUSHING		3	33	4163-5204-04	REGULATING PLATE	RP	1
14	4163-5293-01	SCREW		5	34	4163-6051-01	ATDC SENSOR ATDC (UN1)	RP	1
15	4021-5213-01	GEAR		1	35	4021-5207-01	SEAL		1
16	4021-5212-02	GEAR		1	36	4163-5237-01	SEAL		1
17	4021-5211-01	GEAR		1	37	4021-5219-01	GEAR		1
18	4021-5227-01	GEAR		1	38	4002-5042-01	PLATE NUT		1
19	4021-5214-01	GEAR		1	39	4163-5230-03	BUSHING		1
20	4163-5252-04	SEAL		1	40	4163-5221-01	SEAL		1

INDEX	PART NO.	PART NAME	REC	QTY	SFIX

10 CLEANER UNIT

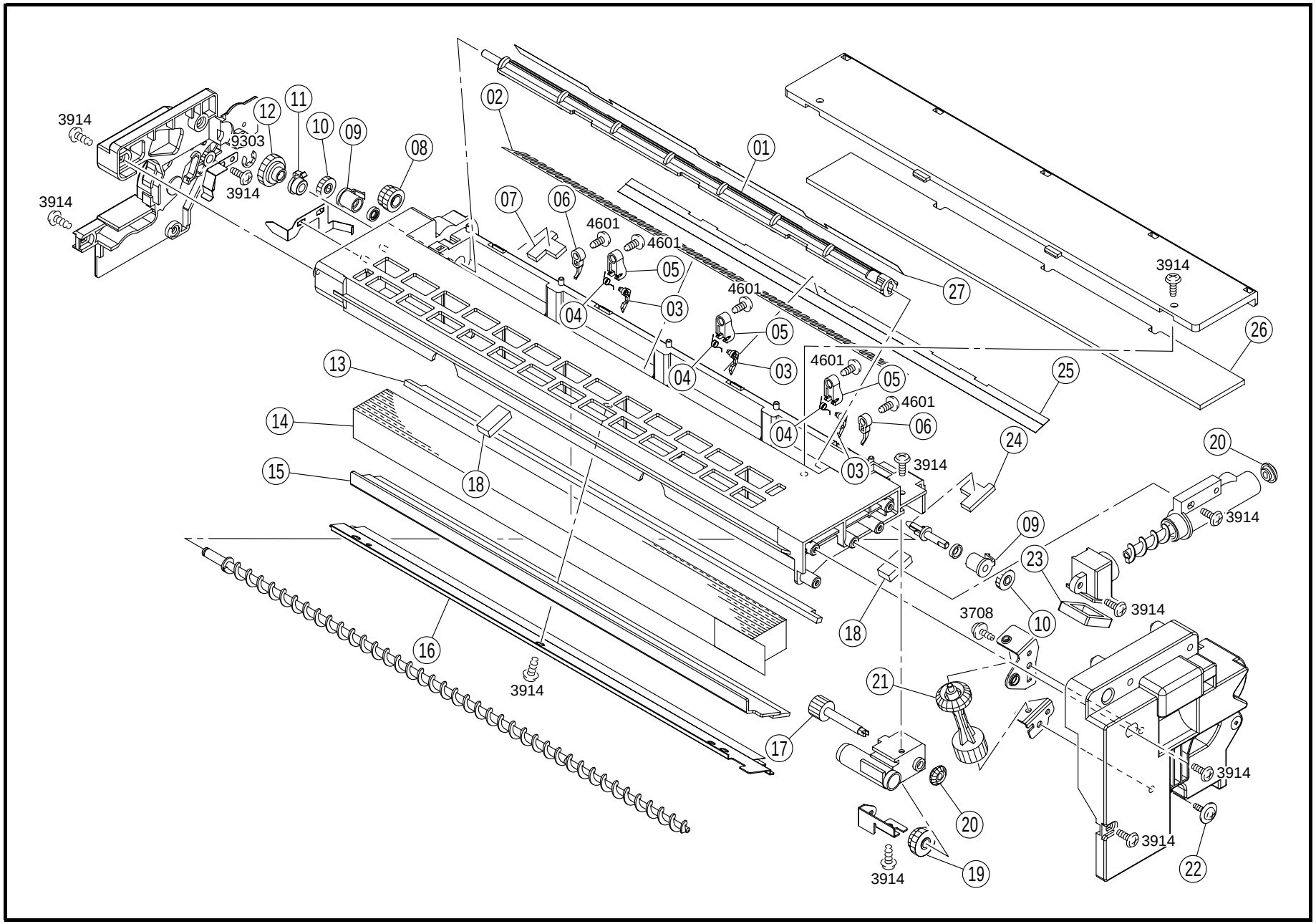

INDEX	PART NO.	PART NAME	REC	QTY
01	4163-5607-02	SCREW		1
02	4163-5617-01	SEAL		1
03	4163-4370-01	SEPARATOR	RP	3
04	4163-4072-01	TORSION SPRING		3
05	4163-4361-04	HOLDER		3
06	4162-4074-01	GUIDE		2
07	4163-5604-02	SEAL		1
08	4021-5618-01	GEAR		1
09	4163-5611-01	BUSHING		2
10	4163-5609-01	GEAR		2
11	4163-5625-01	BUSHING		1
12	4021-5619-01	GEAR		1
13	4163-5614-01	SEAL		1
14	1156-4118-02	OZONE FILTER	RP	1
15	4163-5602-02	CLEANING BLADE	RP	1
16	4163-4302-01	NETURALIZING MEMBER	RP	1
17	4021-5616-01	GEAR		1
18	4163-5603-01	SEAL		2

INDEX	PART NO.	PART NAME	REC	QTY
19	4021-5615-01	GEAR		1
20	4163-5639-01	GEAR		2
21	4021-5205-01	GEAR		1
22	4163-5293-01	SCREW		1
23	4021-5611-01	SEAL		1
24	4163-5605-02	SEAL		1
25	4163-5606-04	SEAL		1
26	4163-5612-02	SEAL		1
27	4163-5620-01	SEAL		1

INDEX	PART NO.	PART NAME	REC	QTY	SFIX

11 TRANSPORT UNIT

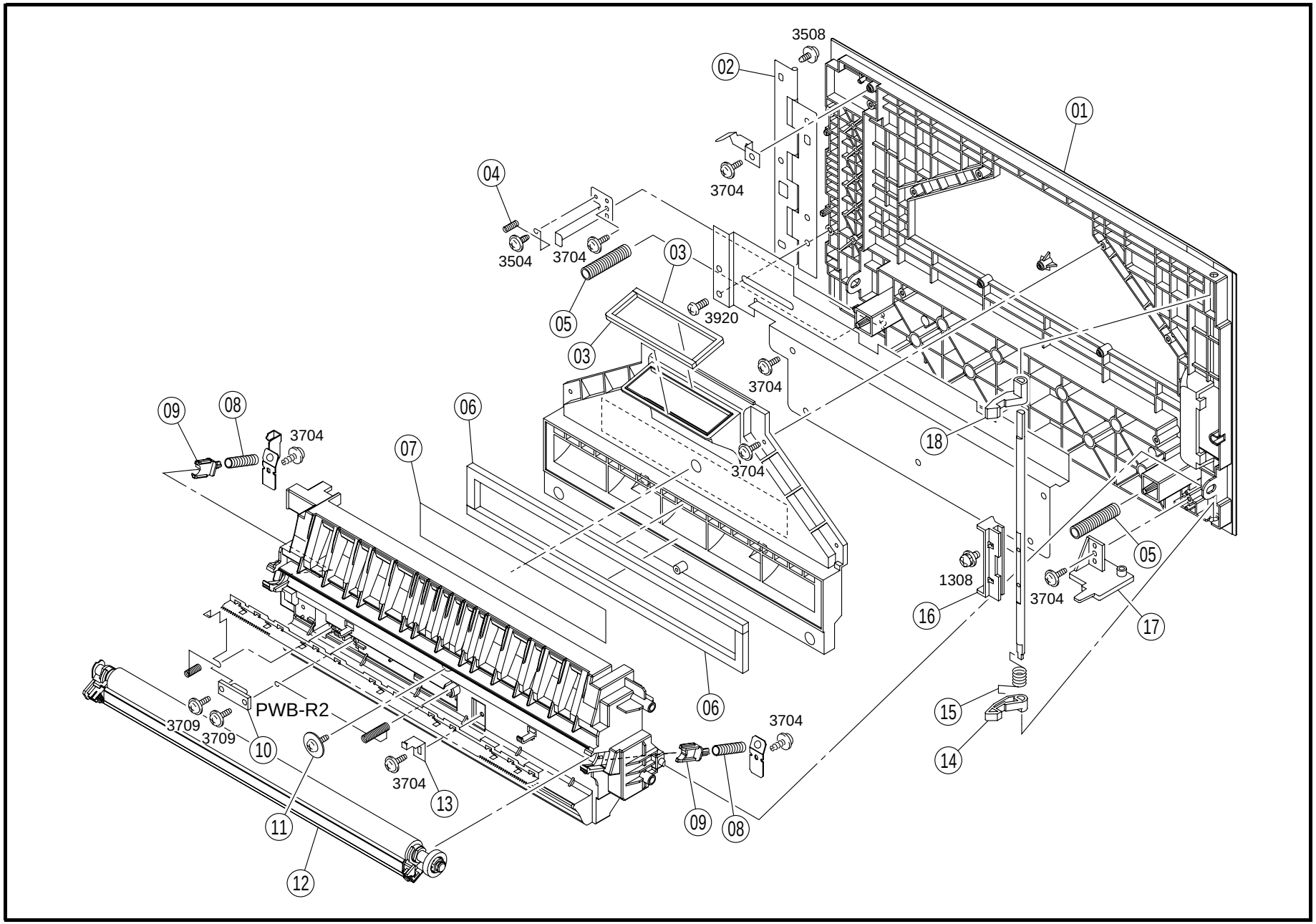

INDEX	PART NO.	PART NAME	REC	QTY	INDEX	PART NO.	PART NAME	REC	QTY
01	4021-3502-02	COVER		1					
02	4021-2019-02	HINGE		1					
03	4021-3522-01	SEAL		2					
04	4021-2305-01	CONTACT		1					
05	4011-3515-01	PRESSURE SPRING		2					
06	4021-3523-01	SEAL		2					
07	4021-7302-01	LABEL		1					
08	1164-4207-01	PRESSURE SPRING		2					
09	1164-4206-02	BUSHING		2					
10	4011-0112-01	PWB ASSY (PWB-R2)		1					
11	4163-5293-01	SCREW		1					
12	4021-0315-01	TRANSFER ROLLER ASSY	RP	1					
13	4021-4211-01	STOPPER		1					
14	4021-2315-01	LEVER		1					
15	4021-2312-01	TORSION SPRING		1					
16	4021-2313-02	HANDLE		1					
17	4021-2307-01	LEVER		1					
18	4021-2311-01	LEVER		1					

INDEX	PART NO.	PART NAME	REC	QTY	SFIX

12 FUSING UNIT

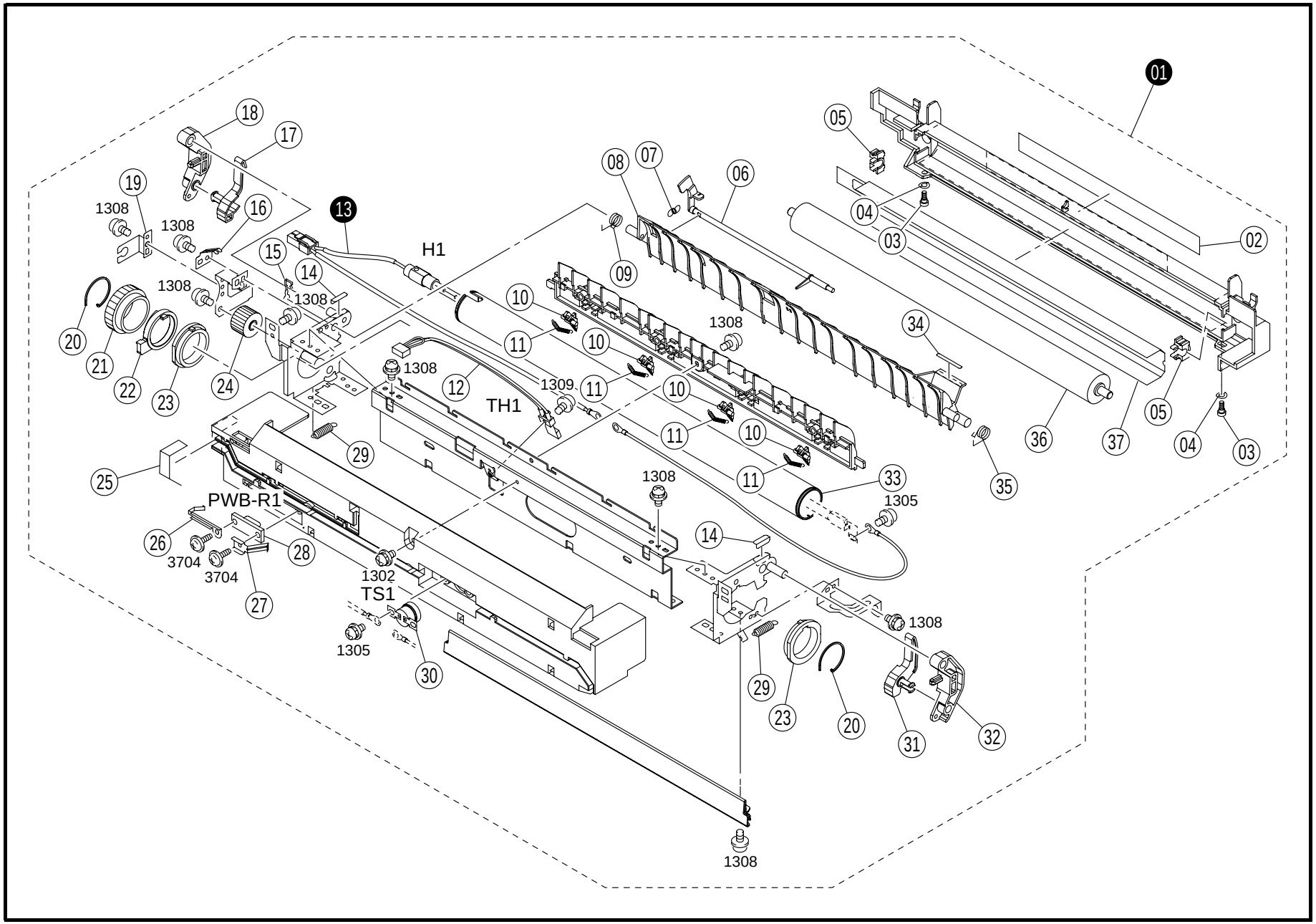

INDEX	PART NO.	PART NAME	REC	QTY
02	4021-7310-01	LABEL		1
03	4021-5742-01	SHOULDER SCREW		2
04	1164-5765-01	SPACER		2
05	4021-5711-01	BUSHING	RP	2
06	4021-5722-01	ACTUATOR		1
07	4021-5723-01	TENSION SPRING		1
08	4021-5714-03	GUIDE		1
09	4021-5715-01	TORSION SPRING		1
10	4021-5720-02	SEPARATOR	RP	4
11	4021-5721-01	TENSION SPRING		4
12	9372-2710-12	THERMISTOR FUSING (TH1)	RP	1
14	4021-5739-01	PROTECTION		2
15	4021-5740-02	STOP RING		1
16	4021-5747-01	CONTACT		1
17	4021-5726-02	LEVER		1
18	4021-5733-01	LEVER		1
19	4021-5734-01	HOLDER		1
20	4021-5712-01	STOP RING		2

INDEX	PART NO.	PART NAME	REC	QTY
21	4021-5713-02	GEAR		1
22	4021-5728-02	BUSHING		1
23	4021-5710-03	BUSHING	RP	2
24	4021-5731-01	GEAR		1
25	4021-5745-01	SEAL		1
26	4021-5729-01	CONTACT		1
27	4021-5732-01	CONTACT		1
28	4011-0110-01	PWB ASSY (PWB-R1)		1
29	4021-5727-01	TENSION SPRING		2
30	9334-1100-11	THERMAL SWITCH FUSING (TS1)	RP	1
31	4021-5725-02	LEVER		1
32	4021-5724-01	LEVER		1
33	4021-5701-02	ROLLER	RP	1
34	4021-5741-01	LABEL		1
35	4021-5735-02	TORSION SPRING		1
36	4021-5702-01	ROLLER	RP	1
37	4021-5746-01	NETURALIZING MEMBER		1

INDEX	PART NO.	PART NAME	REC	QTY	SFIX
01	4021-0321-03	FUSING UNIT	RP	1	311, 313, 314
01	4021-0322-03	FUSING UNIT	RP	1	211, 212, 214, 218, 219
13	9352-2100-31	HEATER FUSING (H1)	RP	1	311, 313, 314
13	9352-2100-41	HEATER FUSING (H1)	RP	1	211, 212, 214, 218, 219

13 PAPER EXIT SECTION

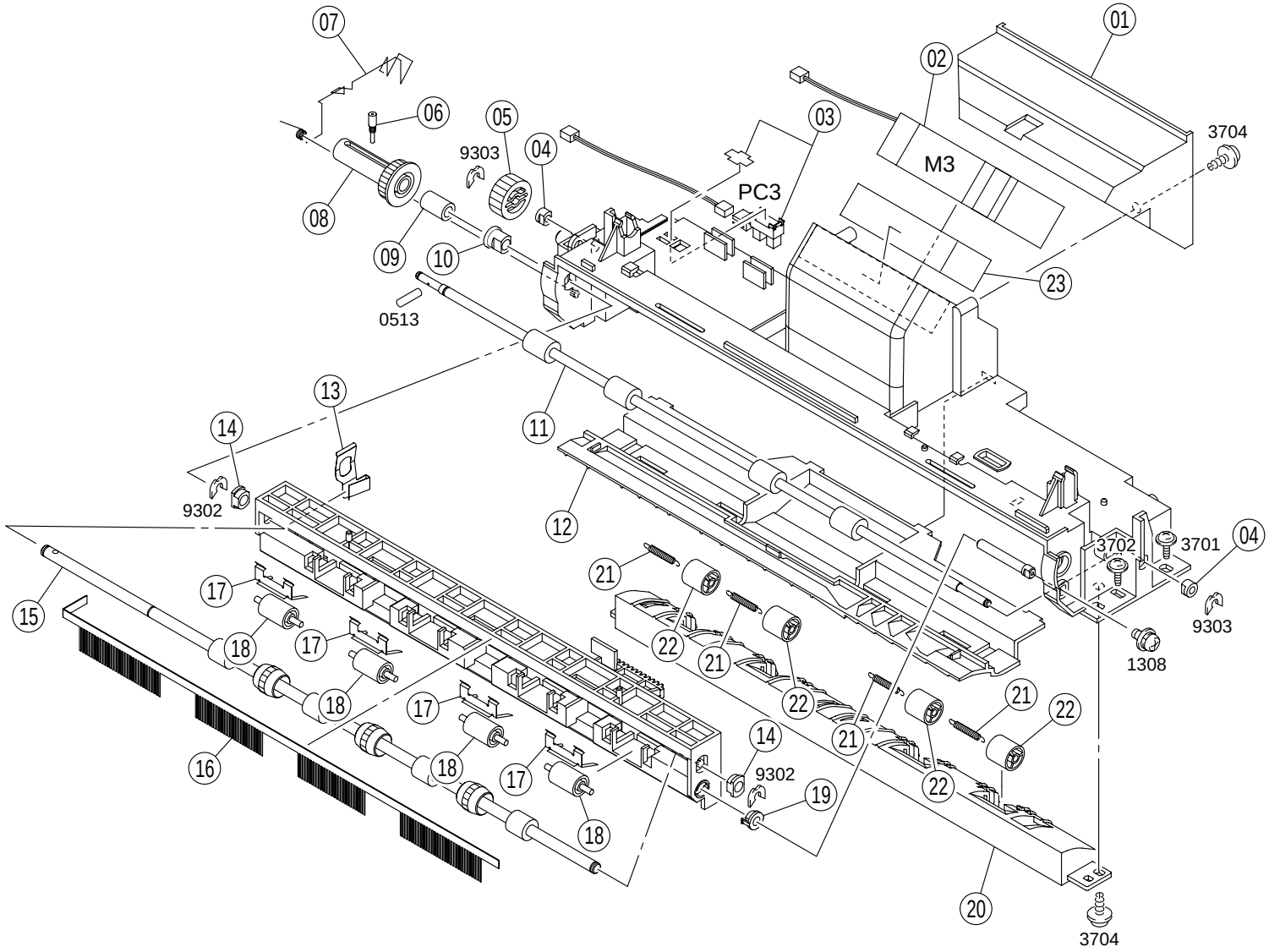

INDEX	PART NO.	PART NAME	REC	QTY
01	4021-5821-01	DUCT		1
02	9313-1100-11	FAN MOTOR FUSING COOL (M3)		1
03	4686-0901-01	PHOTO INTERRUPTER PAPER EXIT (PC3)		1
04	4021-5826-01	BUSHING		2
05	4021-5813-01	GEAR		1
06	4021-5805-01	SHOULDER SCREW		1
07	4021-5815-01	SPRING		1
08	4021-5806-01	GEAR		1
09	4021-5823-01	COLLAR		1
10	4021-5827-01	BUSHING		1
11	4021-5810-03	ROLLER		1
12	4021-5808-01	GUIDE		1
13	4021-5819-01	SET PLATE		1
14	1159-1938-01	BUSHING		2
15	4021-5801-03	ROLLER		1
16	4021-5814-01	NEUTRALIZING BRUSH		1
17	4021-5803-02	PLATE SPRING		4
18	4021-5802-01	ROLL		4
19	4021-5825-01	BUSHING		1
20	4021-5809-02	GUIDE		1
21	4021-5812-02	TENSION SPRING		4
22	4021-5811-02	ROLL		4
23	4021-5822-01	SPACER		1

INDEX	PART NO.	PART NAME	REC	QTY	SFIX

14 DRIVE SECTION

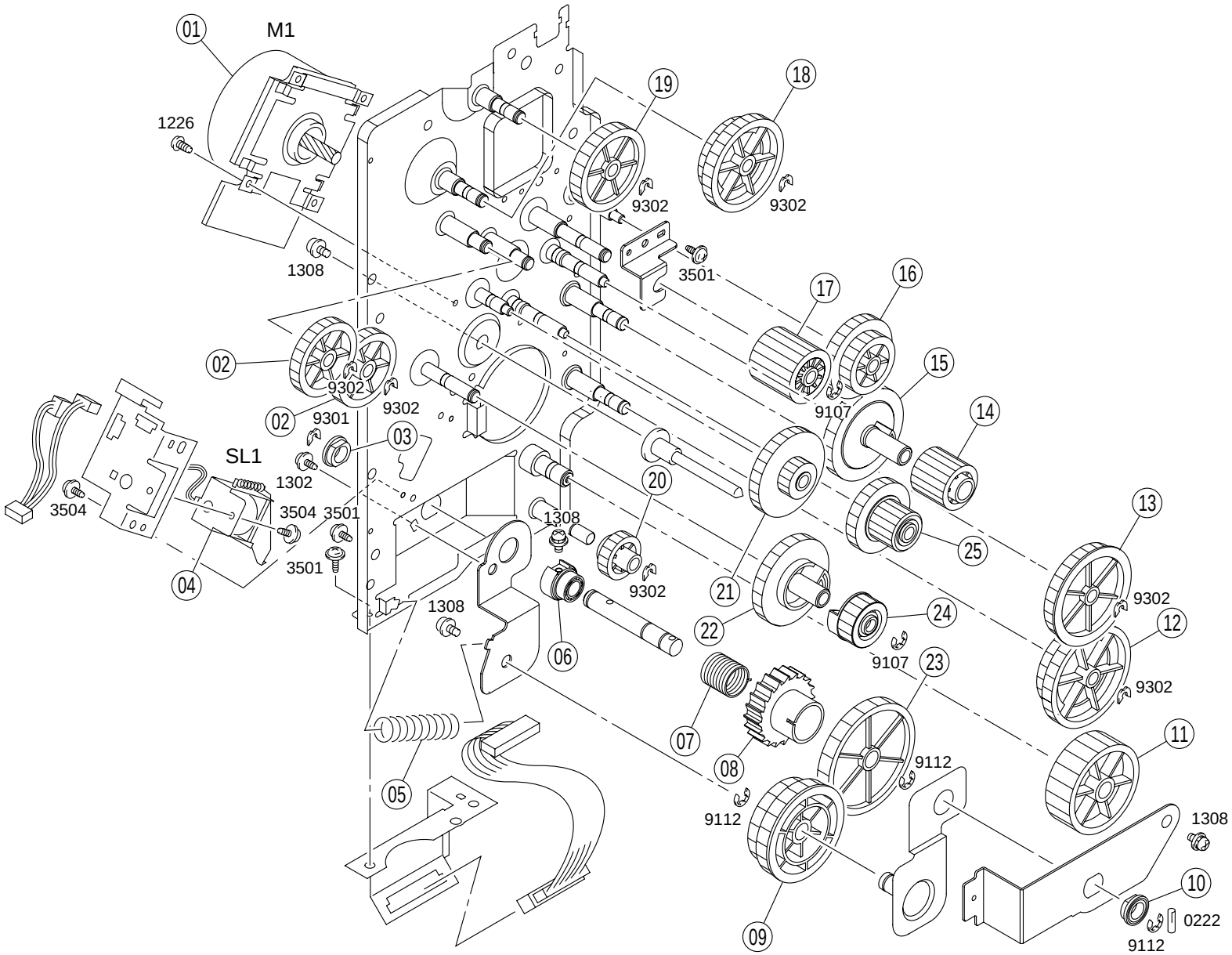

INDEX	PART NO.	PART NAME	REC	QTY
01	9314-2000-91	MOTOR MAIN (M1)		1
02	4021-2513-01	GEAR		2
03	4011-2504-01	BUSHING		1
04	9321-2100-11	SOLENOID TAKE-UP (SL1)		1
05	4021-2545-01	PRESSURE SPRING		1
06	4021-2542-01	BUSHING		1
07	4021-2541-01	TORSION SPRING	RP	1
08	4021-2540-01	RATCHET		1
09	4021-2517-01	GEAR		1
10	4021-2547-02	BUSHING		1
11	4021-2508-01	GEAR		1
12	4021-2507-01	GEAR		1
13	4021-2506-01	GEAR		1
14	4021-2510-01	GEAR		1
15	4021-2505-01	GEAR		1
16	4021-2511-01	GEAR		1
17	4021-2512-01	GEAR		1
18	4021-2514-01	GEAR		1
19	4021-2515-01	GEAR		1
20	4021-2516-01	GEAR		1
21	4021-2501-01	GEAR		1
22	4021-2503-01	GEAR		1
23	4021-2509-01	GEAR		1
24	4021-2504-01	GEAR		1
25	4021-2502-01	GEAR		1

INDEX	PART NO.	PART NAME	REC	QTY	SFIX

15 ELECTRICAL COMPONENTS

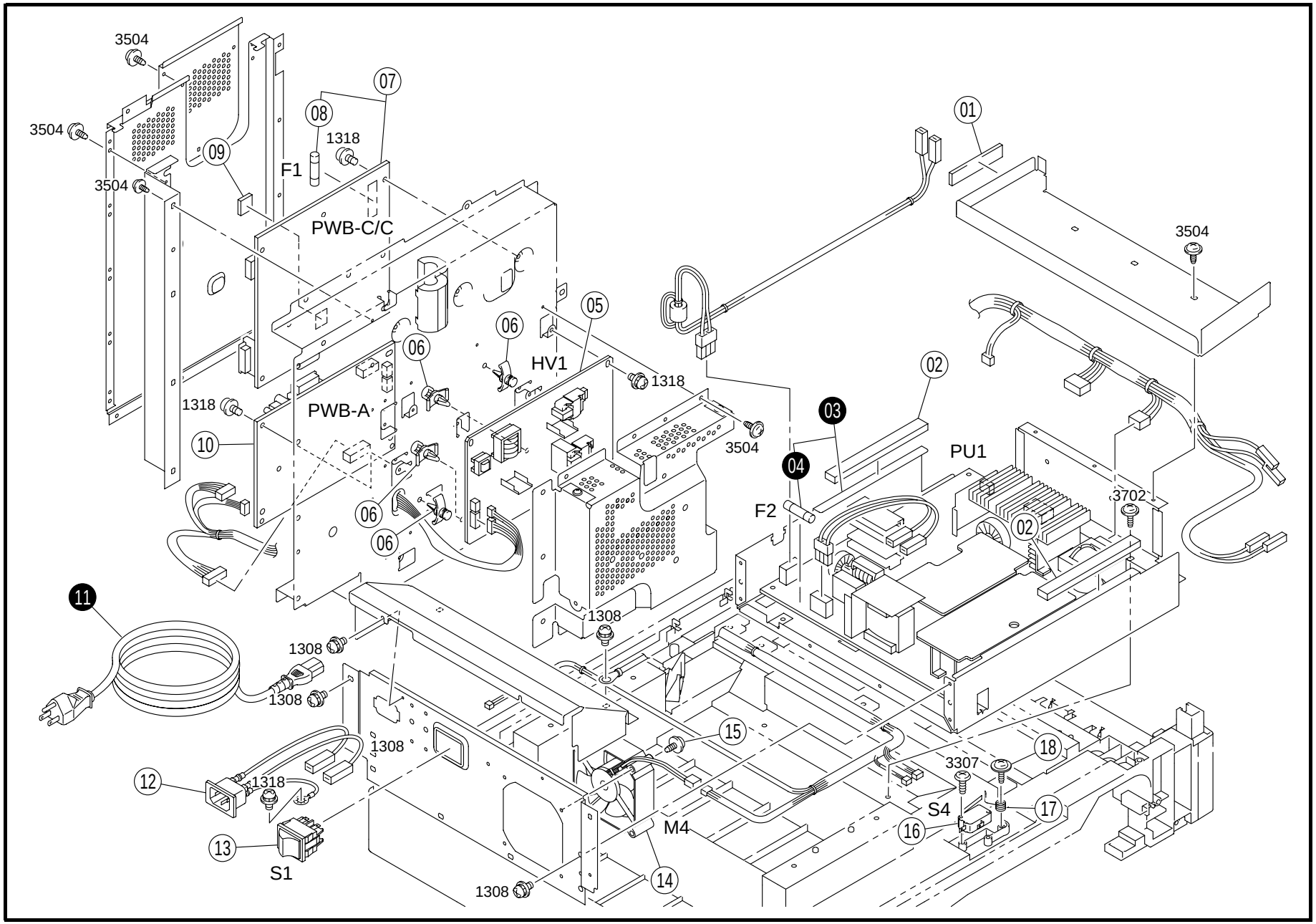

INDEX	PART NO.	PART NAME			REC	QTY
01	1171-6201-01	MAGNETIC MEMBER				1
02	1155-6223-01	SHIELD				2
05	4021-6203-01	HV TRANSFORMER		(HV1)		1
06	9384-1820-81	PWB SUPPORT 9.4H				4
07	4021-6051-03	PWB ASSY		(PWB-C/C)	RP	1
08	9346-3110-41	FUSE 3A		(F1)	RP	1
09	4021-6611-01	IC				1
10	4021-0101-06	PWB ASSY		(PWB-A)	RP	1
12	4021-6801-01	WIRE HARNESS ASSY				1
13	9332-5810-11	SWITCH	MAIN	(S1)		1
14	9313-1100-11	FAN MOTOR	PU COOL	(M4)		1
15	0993-2045-01	SCREW				2
16	9331-2710-11	MICRO SWITCH	RIGHT LOCK	(S4)		1
17	4021-2208-03	TORSION SPRING				1
18	4163-5293-01	SCREW				1

INDEX	PART NO.	PART NAME		REC	QTY	SFIX
03	4021-6201-02	POWER SUPPLY	(PU1)		1	311, 313, 314
03	4021-6202-02	POWER SUPPLY	(PU1)		1	211, 212, 214, 218, 219
04	1131-7802-01	FUSE 6.3A	(F2)	RP	1	211, 212, 214, 218, 219
04	9346-3620-51	FUSE 15A	(F2)	RP	1	311, 313, 314
11	9381-4310-51	POWER CORD			1	214
11	9381-4810-61	POWER CORD			1	212
11	9381-4910-21	POWER CORD			1	219
11	9381-4911-01	POWER CORD			1	311, 313
11	9381-4911-21	POWER CORD			1	218

16 MANUAL FEED SECTION

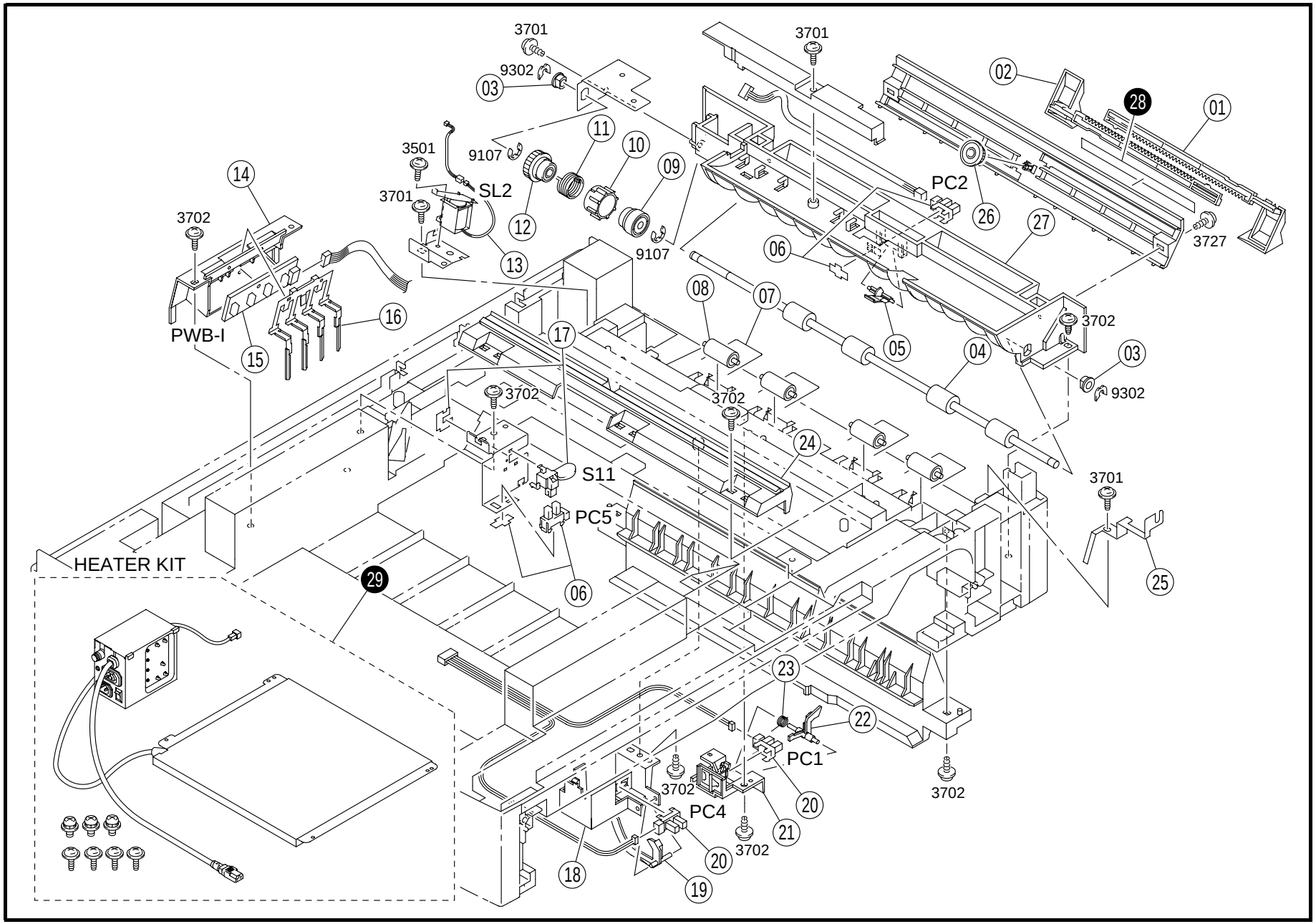

INDEX	PART NO.	PART NAME	REC	QTY
01	4021-3111-01	REGULATING PLATE		1
02	4021-3112-01	REGULATING PLATE		1
03	1274-2611-01	BUSHING		2
04	4021-3102-01	ROLLER	RP	1
05	4011-3205-01	ACTUATOR		1
06	4686-0901-01	PHOTO INTERRUPTER (PC2.5)		2
07	4603-3218-01	SPRING		4
08	4603-3207-01	ROLL		4
09	4021-3105-01	COLLAR		1
10	4021-3106-01	RATCHET		1
11	4021-3108-01	SPRING	RP	1
12	4021-3103-01	GEAR		1
13	9321-2100-11	SOLENOID MANU FEED (SL2)		1
14	4021-3004-01	HOLDER		1
15	4011-0111-01	PWB ASSY SIZE (PWB-I)	RP	1
16	1164-3020-03	LEVER		1
17	4686-0902-01	PUSHBUTTON SWITCH PAPER SIZE (S11)		1
18	4021-3003-01	COVER		1
19	1164-3027-01	ACTUATOR		1
20	4611-6301-01	PHOTO INTERRUPTER MPC (PC1.4)		2
21	4021-3503-01	HOLDER		1
22	4021-3504-01	ACTUATOR		1
23	1139-3131-01	TORSION SPRING		1
24	4021-0151-01	HOLDER ASSY	RP	1
25	4021-3109-02	PLATE SPRING		1
26	4603-3205-01	GEAR		1
27	4021-3101-02	COVER		1

INDEX	PART NO.	PART NAME	REC	QTY	SFIX
28	4021-7304-03	LABEL		1	211, 212, 218, 219
28	4021-7305-02	LABEL		1	214, 311
28	4021-7361-01	LABEL		1	313, 314
29	4658-0122-02	HEATER ASSY		1	311, 313, 314
29	4658-0123-02	HEATER ASSY		1	211, 212, 214, 218, 219

17 CASSETTE SECTION

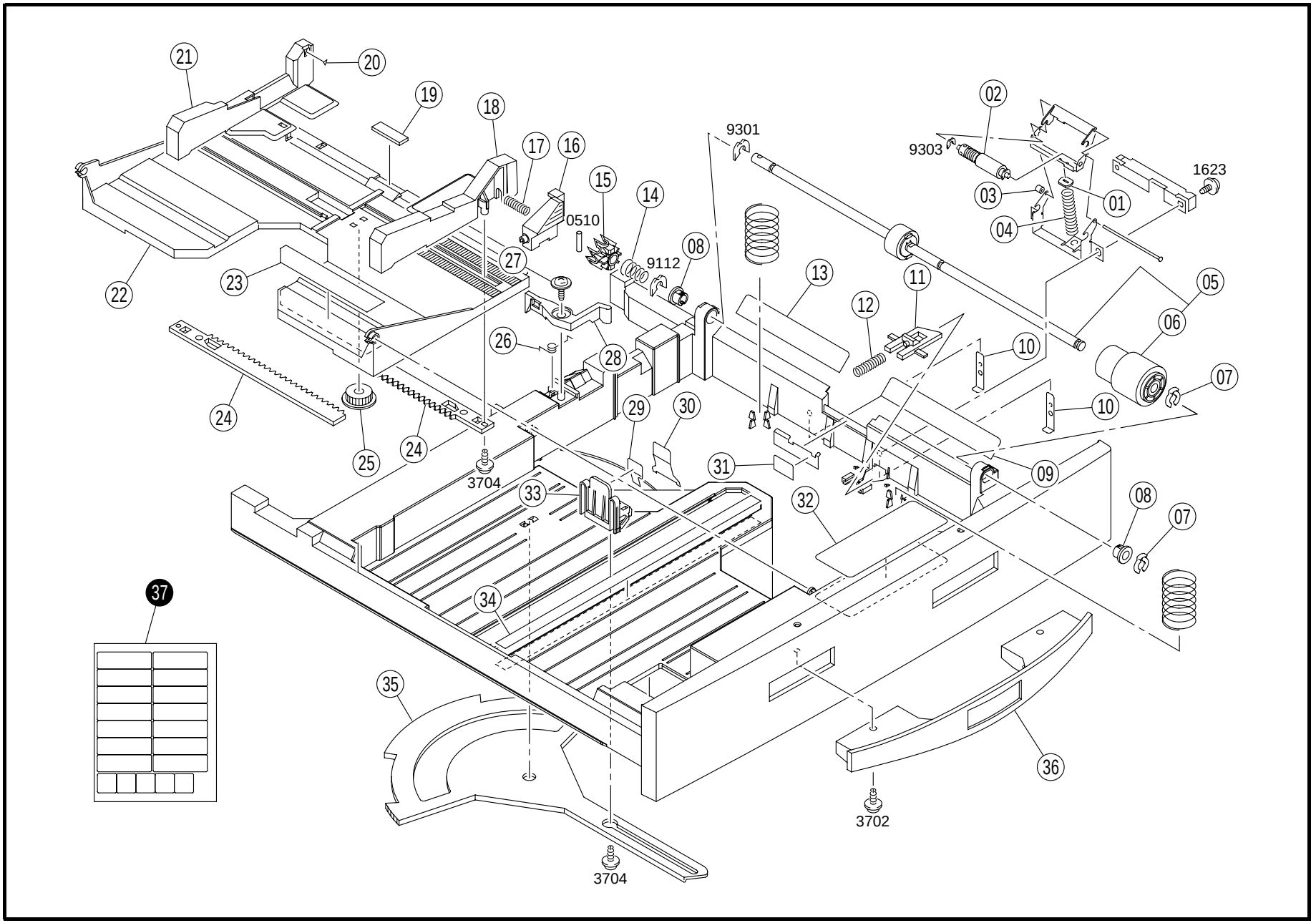

INDEX	PART NO.	PART NAME	REC	QTY
01	1144-3097-01	HOLDER		1
02	4658-0151-01	ROLLER ASSY	RP	1
03	4658-3047-01	COLLAR		1
04	4021-3033-01	PRESSURE SPRING		1
05	4021-0751-01	ROLLER ASSY		1
06	4021-3012-01	ROLLER	RP	1
07	4658-3046-01	STOP RING		2
08	1164-3003-01	BUSHING		2
09	4021-3019-01	GUIDE		1
10	4021-3034-02	BRACKET		2
11	1164-3061-01	LEVER		1
12	1164-3062-01	PRESSURE SPRING		1
13	4021-3020-01	GUIDE		1
14	1164-3005-02	PRESSURE SPRING		1
15	1164-3004-03	PAWL		1
16	4011-3010-02	LEVER		1
17	4011-3011-01	PRESSURE SPRING		1
18	4011-3008-01	REGULATING PLATE		1
19	1164-3064-01	FRICTION SHEET		1
20	4021-7311-01	LABEL		1
21	4011-3009-01	REGULATING PLATE		1
22	4011-3007-02	LIFTING PLATE		1
23	4021-7308-02	SCALE		1
24	1164-3049-02	RACK		2
25	1164-3045-01	GEAR		1
26	4011-3005-01	TORSION SPRING		1
27	4163-5293-01	SCREW		1
28	4011-3002-01	LEVER		1
29	4021-3036-01	GUIDE		1
30	4021-3035-02	GUIDE		1
31	4021-3032-01	GUIDE		1
32	4021-7303-01	LABEL		1
33	1164-3048-02	REGULATING PLATE		1
34	4021-7309-03	SCALE		1
35	4686-3350-01	LEVER		1
36	4658-1001-03	HANDLE		1

INDEX	PART NO.	PART NAME	REC	QTY	SFIX
37	4011-7313-01	LABEL		1	211, 212, 218, 313, 314
37	4011-7314-01	LABEL		1	214, 311
37	4021-7319-01	LABEL		1	219

18 JOB TRAY (OPTION) JS-202

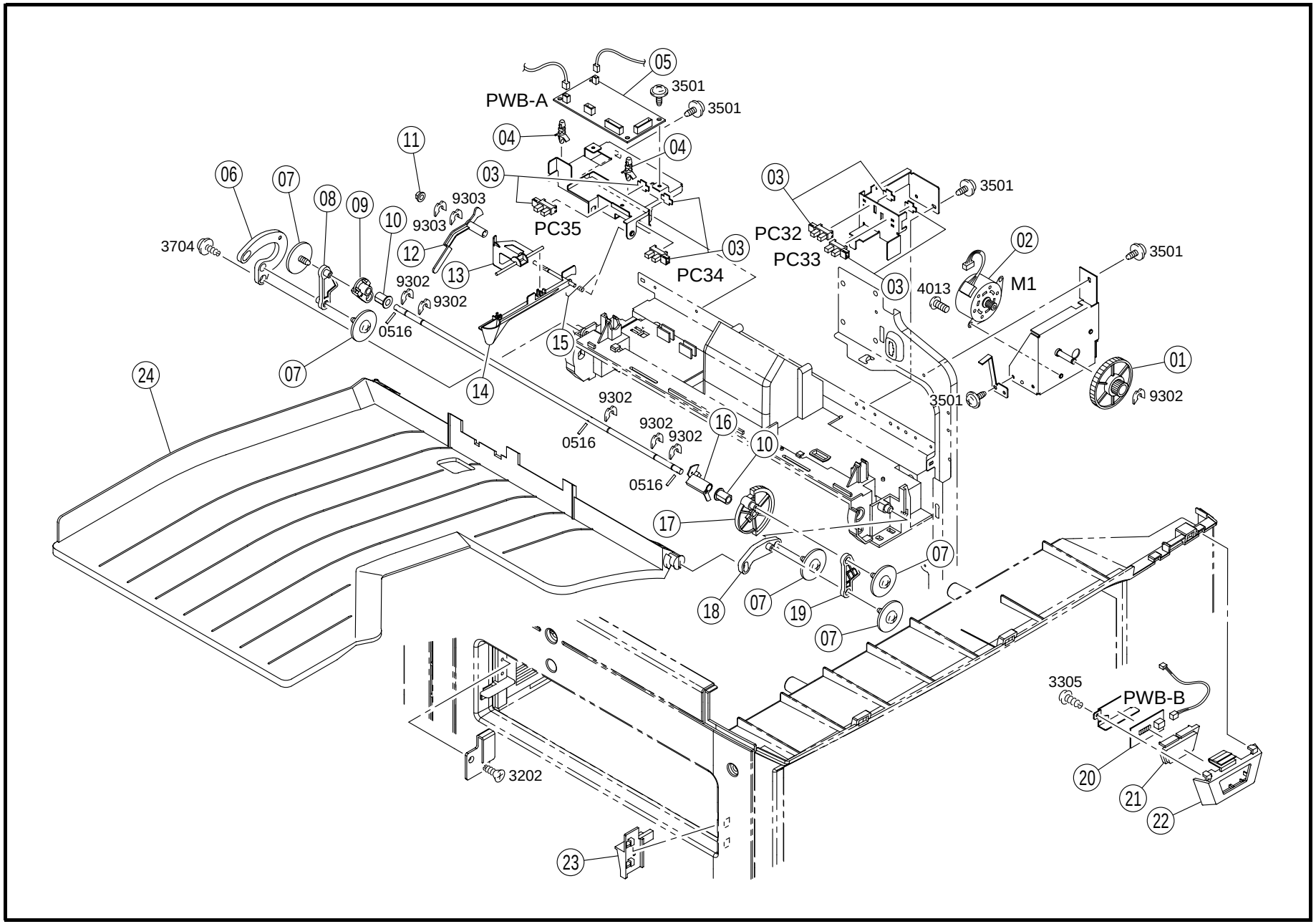

INDEX	PART NO.	PART NAME	REC	QTY
01	4689-2404-02	GEAR		1
02	9314-1100-21	MOTOR BIN CHANGE (M1)		1
03	4686-0901-01	PHOTO INTERRUPTER (PC32-35)		4
04	9384-1900-56	PWB SUPPORT 6.35H		2
05	4689-0101-02	PWB ASSY (PWB-A)	RP	1
06	4689-3408-02	ARM		1
07	4163-5293-01	SCREW		5
08	4689-3409-02	ARM		1
09	4689-3402-01	ARM		1
10	4689-3405-01	BUSHING		2
11	1200-3201-08	BUSHING		1
12	4689-4403-02	LEVER		1
13	4689-4404-02	LEVER		1
14	4689-4402-02	LEVER		1
15	4689-3201-02	TORSION SPRING		1
16	4689-3410-02	DETECTING PLATE		1
17	4689-2402-02	GEAR		1
18	4689-3406-02	ARM		1

INDEX	PART NO.	PART NAME	REC	QTY
19	4689-3407-01	ARM		1
20	4689-0102-02	PWB ASSY LED (PWB-B)		1
21	4689-1402-01	COVER		1
22	4689-1401-02	COVER		1
23	4689-4405-02	HOLDER		1
24	4689-4401-01	TRAY		1

INDEX	PART NO.	PART NAME	REC	QTY	SFIX

19 WIRING ACCESSORIES AND JIGS

⑴ 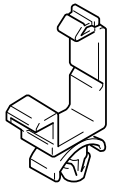	⑻, ⑼ 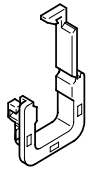	⑭ 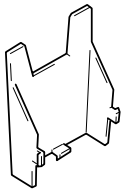					
⑵ 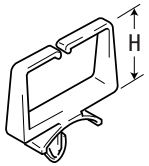	⑽ 	⑮ 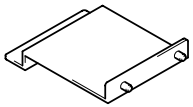					
⑶ 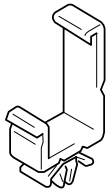	⑾ 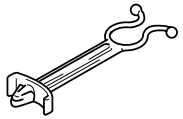	⑯ 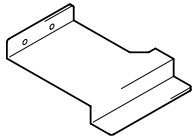					
⑷ 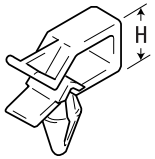	⑿ 	⑰ 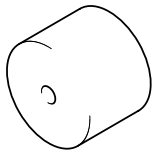					
⑸-⑺ 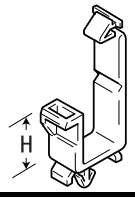	⒀ 	⒅ 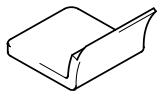					

INDEX	PART NO.	PART NAME		REC	QTY	INDEX	PART NO.	PART NAME	REC	QTY
01	9384-1000-51	WIRING SADDLE			3					
02	9384-1310-81	WIRING SADDLE 6.4H			8					
03	9384-1311-21	WIRING SADDLE 16.8H			1					
04	9384-1820-31	WIRING SADDLE 8.0H			3					
05	9384-1921-11	WIRING SADDLE 9.2H			3					
06	9384-1921-01	WIRING SADDLE 14.4H			4					
07	9384-1921-21	WIRING SADDLE 15.2H			5					
08	9384-2910-21	EDGE COVER			1					
09	9384-2910-31	EDGE COVER			3					
10	9384-2010-21	EDGE COVER 8.5H			15					
11	9384-1911-11	SO CLIP			1					
12	9384-1311-11	CABLE TIE 104L			1					
13	1031-4403-01	GROMMET			1					
14	1156-7501-01	HOLDER			1					
15	4021-7901-01	JIG	SLIDER F	RP	1					
16	4021-7902-01	JIG	SLIDER R	RP	1					
17	4021-7903-01	JIG	PC	RP	2					
18	4021-7904-01	JIG	D.B. ADJUST	RP	2					

INDEX	PART NO.	PART NAME	REC	QTY	SFIX

20 SCREWS AND WASHERS

INDEX	PART NO.	PART NAME	ILLUST
0222	9754-3022-08	SPRING ROLL PIN	
0510 0513 0516	9752-3014-50 9752-2014-50 9752-2512-50	PIN	
1226 1285	9644-0406-13 9644-0304-21	SCREW	
1302 1304 1305 1308 1309 1318 1398	9646-0305-13 9646-0306-07 9646-0306-13 9646-0308-13 9646-0310-13 9646-0408-13 9646-0314-01	SCREW	
1623 1627	9654-0408-01 9654-0408-13	SCREW	
2902	9646-0306-14	SCREW	
3202 3204 3211	9657-0306-13 9657-0308-13 9657-0314-07	TAPPING SCREW	
3305 3307 3324	9732-0308-13 9732-0316-13 9732-0306-01	TAPPING SCREW	
3501 3504 3508 3541 3544	9735-0306-13 9735-0308-13 9735-0408-13 9735-0308-14 9735-0306-14	TAPPING SCREW	

INDEX	PART NO.	PART NAME	ILLUST
3701 3702 3703 3704 3708 3709 3716 3726 3727	9739-0408-13 9739-0410-13 9739-0412-13 9739-0308-13 9739-0308-07 9739-0310-13 9739-0306-07 9739-0408-14 9739-0308-14	TAPPING SCREW	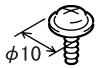
3914 3920	9742-0308-07 9742-0408-14	TAPPING SCREW	
4012 4013 4601	9743-0306-13 9743-0412-07 9747-1740-07	TAPPING SCREW	
7101	9684-0303-08	SET SCREW	
9107 9109 9112	9721-0400-01 9721-0500-01 9721-0600-01	RETAINING RING	
9301 9302 9303	1066-1151-01 4425-3001-01 4425-3002-01	RETAINING RING	

INDEX	PART NO.	PART NAME	ILLUST

21 NUMERICAL INDEX

PART NO.	FIG.	INDEX	QTY		PART NO.	FIG.	INDEX	QTY		PART NO.	FIG.	INDEX	QTY		PART NO.	FIG.	INDEX	QTY	
0993-2045-01	15	15	2		4011-7313-01	17	37	1		4021-2514-01	14	18	1		4021-5309-01	06	15	1	
1031-4403-01	19	13	1		4011-7314-01	17	37	1		4021-2515-01	14	19	1		4021-5310-01	06	10	1	
1033-4402-01	02	16	1		4011-7322-01	02	18	1		4021-2516-01	14	20	1		4021-5314-01	06	03	1	
1129-7303-01	07	08	3		4021-0101-06	15	10	1		4021-2517-01	14	09	1		4021-5315-01	06	05	1	
1131-7802-01	15	04	1		4021-0151-01	16	24	1		4021-2540-01	14	08	1		4021-5316-02	06	16	1	
1139-1703-02	01	05	3		4021-0306-02	08	09	1		4021-2541-01	14	07	1		4021-5611-01	10	23	1	
1139-1704-14	01	03	1		4021-0308-07	08	17	1		4021-2542-01	14	06	1		4021-5615-01	10	19	1	
1139-1705-01	01	02	2		4021-0315-01	11	12	1		4021-2545-01	14	05	1		4021-5616-01	10	17	1	
1139-1706-01	01	07	1		4021-0321-03	12	01	1		4021-2547-02	14	10	1		4021-5618-01	10	08	1	
1139-3131-01	16	23	1		4021-0322-03	12	01	1		4021-3003-01	16	18	1		4021-5619-01	10	12	1	
1139-5015-01	06	18	1		4021-0531-03	03	07	1		4021-3004-01	16	14	1		4021-5701-02	12	33	1	
1139-5018-04	06	14	3		4021-0533-01	03	07	1		4021-3005-01	03	06	1		4021-5702-01	12	36	1	
1139-5022-01	06	04	1		4021-0751-01	17	05	1		4021-3011-01	03	05	1		4021-5710-03	12	23	2	
1139-5026-01	06	08	2		4021-0752-01	09	04	1		4021-3012-01	17	06	1		4021-5711-01	12	05	2	
1139-5249-01	09	32	1		4021-1001-03	02	15	1		4021-3019-01	17	09	1		4021-5712-01	12	20	2	
1139-5250-01	09	30	1		4021-1002-04	02	12	1		4021-3020-01	17	13	1		4021-5713-02	12	21	1	
1139-5730-01	06	20	1		4021-1003-02	02	02	1		4021-3032-01	17	31	1		4021-5714-03	12	08	1	
1144-3097-01	17	01	1		4021-1004-04	02	10	1		4021-3033-01	17	04	1		4021-5715-01	12	09	1	
1149-3117-01	07	13	1		4021-1005-03	02	07	1		4021-3034-02	17	10	2		4021-5720-02	12	10	4	
1151-5023-01	06	07	2		4021-1009-01	02	20	2		4021-3035-02	17	30	1		4021-5721-01	12	11	4	
1151-5032-01	06	13	1		4021-1010-01	02	23	1		4021-3036-01	17	29	1		4021-5722-01	12	06	1	
1151-5033-02	06	12	1		4021-1011-01	02	01	2		4021-3101-02	16	27	1		4021-5723-01	12	07	1	
1155-6223-01	15	02	2		4021-1014-02	02	11	1		4021-3102-01	16	04	1		4021-5724-01	12	32	1	
1156-4118-02	10	14	1		4021-1015-04	02	04	1		4021-3103-01	16	12	1		4021-5725-02	12	31	1	
1156-7501-01	19	14	1		4021-1017-02	02	03	1		4021-3105-01	16	09	1		4021-5726-02	12	17	1	
1159-1938-01	13	14	2		4021-1201-02	01	11	1		4021-3106-01	16	10	1		4021-5727-01	12	29	2	
1164-3003-01	17	08	2		4021-1202-02	01	11	1		4021-3108-01	16	11	1		4021-5728-02	12	22	1	
1164-3004-03	17	15	1		4021-1203-01	01	11	1		4021-3109-02	16	25	1		4021-5729-01	12	26	1	
1164-3005-02	17	14	1		4021-1204-01	01	11	1		4021-3111-01	16	01	1		4021-5731-01	12	24	1	
1164-3020-03	16	16	1		4021-1307-03	02	05	1		4021-3112-01	16	02	1		4021-5732-01	12	27	1	
1164-3027-01	16	19	1		4021-1308-01	02	06	1		4021-3502-02	11	01	1		4021-5733-01	12	18	1	
1164-3045-01	17	25	1		4021-2009-02	03	01	1		4021-3503-01	16	21	1		4021-5734-01	12	19	1	
1164-3048-02	17	33	1		4021-2015-01	07	04	2		4021-3504-01	16	22	1		4021-5735-02	12	35	1	
1164-3049-02	17	24	2		4021-2019-02	11	02	1		4021-3505-01	07	30	1		4021-5739-01	12	14	2	
1164-3061-01	17	11	1		4021-2023-01	07	09	1		4021-3506-02	07	32	1		4021-5740-02	12	15	1	
1164-3062-01	17	12	1		4021-2026-01	07	01	1		4021-3507-01	07	31	1		4021-5741-01	12	34	1	
1164-3064-01	17	19	1		4021-2101-01	07	15	3		4021-3513-01	07	14	2		4021-5742-01	12	03	2	
1164-3508-01	07	29	1		4021-2103-02	07	05	1		4021-3514-01	07	21	1		4021-5745-01	12	25	1	
1164-3509-01	07	11	4		4021-2104-04	07	20	1		4021-3522-01	11	03	2		4021-5746-01	12	37	1	
1164-3515-01	07	28	1		4021-2106-01	07	03	1		4021-3523-01	11	06	2		4021-5747-01	12	16	1	
1164-4206-02	11	09	2		4021-2107-01	07	16	1		4021-4101-02	08	10	1		4021-5801-03	13	15	1	
1164-4207-01	11	08	2		4021-2108-01	07	19	1		4021-4102-02	08	08	1		4021-5802-01	13	18	4	
1164-5765-01	12	04	2		4021-2109-01	07	18	1		4021-4103-02	08	03	1		4021-5803-02	13	17	4	
1165-4307-01	08	16	1		4021-2110-01	07	22	1		4021-4107-01	08	11	1		4021-5805-01	13	06	1	
1165-4310-01	08	14	1		4021-2111-02	07	17	1		4021-4211-01	11	13	1		4021-5806-01	13	08	1	
1165-5326-02	06	06	1		4021-2208-03	07	24	1		4021-4354-02	08	01	1		4021-5808-01	13	12	1	
1171-6201-01	15	01	1		4021-2208-03	15	17	1		4021-4355-02	08	02	1		4021-5809-02	13	20	1	
1174-5010-01	06	11	1		4021-2210-01	03	04	1		4021-4356-03	08	04	1		4021-5810-03	13	11	1	
1200-3201-08	18	11	1		4021-2301-02	07	27	1		4021-4357-02	07	06	1		4021-5811-02	13	22	4	
1274-2611-01	16	03	2		4021-2305-01	11	04	1		4021-4358-01	08	05	1		4021-5812-02	13	21	4	
4002-1603-01	01	01	1		4021-2307-01	11	17	1		4021-4362-01	08	13	1		4021-5813-01	13	05	1	
4002-5042-01	07	10	4		4021-2308-01	07	26	1		4021-4369-01	07	07	1		4021-5814-01	13	16	1	
4002-5042-01	09	38	1		4021-2311-01	11	18	1		4021-5203-03	09	22	1		4021-5815-01	13	07	1	
4002-7305-01	02	17	1		4021-2312-01	11	15	1		4021-5204-02	09	01	1		4021-5819-01	13	13	1	
4004-7402-01	02	09	1		4021-2313-02	11	16	1		4021-5205-01	10	21	1		4021-5821-01	13	01	1	
4011-0110-01	12	28	1		4021-2315-01	11	14	1		4021-5207-01	09	35	1		4021-5822-01	13	23	1	
4011-0111-01	16	15	1		4021-2316-01	07	25	2		4021-5211-01	09	17	1		4021-5823-01	13	09	1	
4011-0112-01	11	10	1		4021-2501-01	14	21	1		4021-5212-02	09	16	1		4021-5825-01	13	19	1	
4011-2504-01	14	03	1		4021-2502-01	14	25	1		4021-5213-01	09	15	1		4021-5826-01	13	04	2	
4011-3002-01	17	28	1		4021-2503-01	14	22	1		4021-5214-01	09	19	1		4021-5827-01	13	10	1	
4011-3005-01	17	26	1		4021-2504-01	14	24	1		4021-5219-01	09	37	1		4021-6051-03	15	07	1	
4011-3007-02	17	22	1		4021-2505-01	14	15	1		4021-5221-01	09	24	1		4021-6052-04	01	10	1	
4011-3008-01	17	18	1		4021-2506-01	14	13	1		4021-5222-01	09	02	1		4021-6053-04	01	10	1	
4011-3009-01	17	21	1		4021-2507-01	14	12	1		4021-5225-01	09	06	2		4021-6201-02	15	03	1	
4011-3010-02	17	16	1		4021-2508-01	14	11	1		4021-5226-01	09	05	1		4021-6202-02	15	03	1	
4011-3011-01	17	17	1		4021-2509-01	14	23	1		4021-5227-01	09	18	1		4021-6203-01	15	05	1	
4011-3205-01	16	05	1		4021-2510-01	14	14	1		4021-5229-01	09	21	2		4021-6505-01	08	15	1	
4011-3515-01	11	05	2		4021-2511-01	14	16	1		4021-5231-01	09	09	1		4021-6611-01	15	09	1	
4011-7309-01	02	22	1		4021-2512-01	14	17	1		4021-5232-01	09	10	1		4021-6801-01	15	12	1	
4011-7311-01	02	19	1		4021-2513-01	14	02	2		4021-5303-01	06	09	1		4021-7301-01	02	14	1	

21 NUMERICAL INDEX

PART NO.	FIG.	INDEX	QTY		PART NO.	FIG.	INDEX	QTY		PART NO.	FIG.	INDEX	QTY		PART NO.	FIG.	INDEX	QTY	
4021-7302-01	11	07	1		4163-5625-01	10	11	1		4689-3409-02	18	08	1						
4021-7303-01	17	32	1		4163-5639-01	10	20	2		4689-3410-02	18	16	1						
4021-7304-03	16	28	1		4163-6051-01	09	34	1		4689-4401-01	18	24	1						
4021-7305-02	16	28	1		4506-1001-01	04	05	1		4689-4402-02	18	14	1						
4021-7306-01	02	18	1		4506-1002-01	04	08	1		4689-4403-02	18	12	1						
4021-7308-02	17	23	1		4506-1003-01	04	03	4		4689-4404-02	18	13	1						
4021-7309-03	17	34	1		4506-1004-01	04	10	1		4689-4405-02	18	23	1						
4021-7310-01	12	02	1		4506-1005-01	04	06	1		4690-0101-01	03	12	1						
4021-7311-01	17	20	1		4506-1006-01	04	09	1		4690-2401-01	03	15	1						
4021-7312-01	01	09	1		4506-1007-01	04	02	1		9312-1100-11	06	01	1						
4021-7314-01	02	13	1		4506-1008-01	01	04	1		9313-1100-11	13	02	1						
4021-7315-01	02	13	1		4506-1010-01	01	08	1		9313-1100-11	15	14	1						
4021-7319-01	17	37	1		4506-1011-01	01	08	1		9314-1100-21	18	02	1						
4021-7361-01	16	28	1		4506-1013-01	05	06	2		9314-1100-31	03	14	1						
4021-7603-01	02	08	1		4506-1014-01	05	11	1		9314-2000-91	14	01	1						
4021-7901-01	19	15	1		4506-1015-01	05	01	2		9321-2100-11	14	04	1						
4021-7902-01	19	16	1		4506-1016-01	05	05	3		9321-2100-11	16	13	1						
4021-7903-01	19	17	2		4506-1017-01	05	08	1		9322-1100-11	07	12	1						
4021-7904-01	19	18	2		4506-1018-01	05	02	1		9323-1410-11	03	17	1						
4120-1014-02	02	21	1		4506-1019-01	05	10	1		9326-2820-11	01	06	1						
4128-1978-01	03	09	2		4506-1020-01	05	21	1		9331-2710-11	07	23	1						
4128-1979-01	03	08	2		4506-1021-01	05	07	2		9331-2710-11	15	16	1						
4156-3826-01	03	10	2		4506-1022-01	05	03	1		9332-1710-41	03	02	1						
4162-4074-01	10	06	2		4506-1023-01	05	18	2		9332-5810-11	15	13	1						
4163-4072-01	10	04	3		4506-1024-01	05	04	1		9334-1100-11	12	30	1						
4163-4103-01	08	07	1		4506-1025-01	05	09	1		9346-3110-41	15	08	1						
4163-4104-02	08	06	1		4506-1026-01	04	01	1		9346-3620-51	15	04	1						
4163-4106-01	08	12	1		4506-1027-01	05	23	1		9352-2100-31	12	13	1						
4163-4302-01	10	16	1		4506-1028-01	05	14	1		9352-2100-41	12	13	1						
4163-4361-04	10	05	3		4506-1029-01	05	24	2		9372-2710-12	12	12	1						
4163-4370-01	10	03	3		4506-1030-01	05	20	2		9381-4310-51	15	11	1						
4163-5204-04	09	33	1		4506-1031-01	05	19	1		9381-4810-61	15	11	1						
4163-5217-01	09	31	1		4506-1032-01	05	13	5		9381-4910-21	15	11	1						
4163-5221-01	09	40	1		4506-1033-01	05	22	1		9381-4911-01	15	11	1						
4163-5226-01	09	07	2		4506-1034-01	05	12	1		9381-4911-21	15	11	1						
4163-5229-02	09	25	1		4506-1035-01	05	17	1		9384-1000-51	19	01	3						
4163-5230-03	09	39	1		4506-1036-01	05	16	1		9384-1310-81	19	02	8						
4163-5231-02	09	12	2		4506-1037-01	05	15	2		9384-1311-11	19	12	1						
4163-5237-01	09	36	1		4506-1038-01	04	04	3		9384-1311-21	19	03	1						
4163-5241-03	09	28	1		4603-3205-01	16	26	1		9384-1820-31	19	04	3						
4163-5244-01	09	29	1		4603-3207-01	16	08	4		9384-1820-81	15	06	4						
4163-5245-01	09	26	1		4603-3218-01	16	07	4		9384-1900-56	03	16	2						
4163-5252-04	09	20	1		4611-6301-01	06	02	1		9384-1900-56	18	04	2						
4163-5271-01	09	23	3		4611-6301-01	16	20	2		9384-1911-11	19	11	1						
4163-5272-01	09	27	1		4647-1039-01	04	07	1		9384-1921-01	19	06	4						
4163-5277-01	09	11	3		4658-0122-02	16	29	1		9384-1921-11	19	05	3						
4163-5278-01	06	17	1		4658-0123-02	16	29	1		9384-1921-21	19	07	5						
4163-5278-01	09	13	3		4658-0151-01	17	02	1		9384-2010-21	19	10	15						
4163-5293-01	06	19	3		4658-1001-03	17	36	1		9384-2910-21	19	08	1						
4163-5293-01	07	02	4		4658-3046-01	17	07	2		9384-2910-31	19	09	3						
4163-5293-01	09	14	5		4658-3047-01	17	03	1		9459-1807-01	03	03	1						
4163-5293-01	10	22	1		4686-0901-01	03	13	1											
4163-5293-01	11	11	1		4686-0901-01	13	03	1											
4163-5293-01	15	18	1		4686-0901-01	16	06	2											
4163-5293-01	17	27	1		4686-0901-01	18	03	4											
4163-5293-01	18	07	5		4686-0902-01	16	17	1											
4163-5296-02	09	03	1		4686-3304-01	03	11	2											
4163-5298-01	09	08	2		4686-3350-01	17	35	1											
4163-5602-02	10	15	1		4689-0101-02	18	05	1											
4163-5603-01	10	18	2		4689-0102-02	18	20	1											
4163-5604-02	10	07	1		4689-1401-02	18	22	1											
4163-5605-02	10	24	1		4689-1402-01	18	21	1											
4163-5606-04	10	25	1		4689-2402-02	18	17	1											
4163-5607-02	10	01	1		4689-2404-02	18	01	1											
4163-5609-01	10	10	2		4689-3201-02	18	15	1											
4163-5611-01	10	09	2		4689-3402-01	18	09	1											
4163-5612-02	10	26	1		4689-3405-01	18	10	2											
4163-5614-01	10	13	1		4689-3406-02	18	18	1											
4163-5617-01	10	02	1		4689-3407-01	18	19	1											
4163-5620-01	10	27	1		4689-3408-02	18	06	1											



Copyright

2001 MINOLTA CO., LTD.

Use of this catalog should be strictly supervised to avoid disclosure of confidential information.

MINOLTA Co., Ltd.

4021-7995-21 01101600