MINOLTA

Service Manual

[Field Service]

The essentials of imaging

Di152/Di183

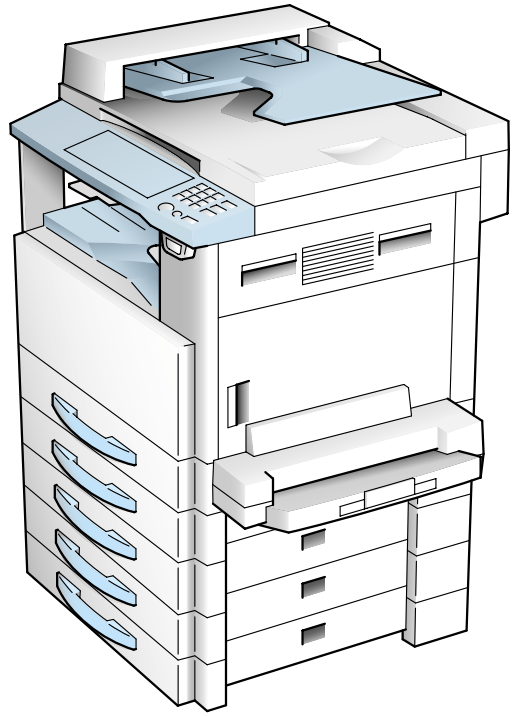

INDEX (FIELD SERVICE)

SAFETY PRECAUTIONS FOR INSPECTION AND SERVICE

DIS/REASSEMBLY, ADJUSTMENT

SWITCHES ON PWBs, TECH. REP. SETTINGS

TROUBLESHOOTING

1. SAFETY PRECAUTIONS FOR INSPECTION AND SERVICE

- When performing inspection and service procedures, observe the following precautions to prevent accidents and ensure utmost safety.

✻ Depending on the model, some of the precautions given in the following do not apply.

- Different markings are used to denote specific meanings as detailed below.



WARNING Indicates a potentially hazardous situation which, if not avoided, could result in death or serious injury.



CAUTION Indicates a potentially hazardous situation which, if not avoided, may result in minor or moderate injury. It may also be used to alert against unsafe practices.

- The following graphic symbols are used to give instructions that need to be observed.



Used to call the service technician's attention to what is graphically represented inside the marking (including a warning).



Used to prohibit the service technician's from doing what is graphically represented inside the marking.



Used to instruct the service technician's to do what is graphically represented inside the marking.

1-1. Warning

WARNING

1. Always observe precautions.



- Parts requiring special attention in this product will include a label containing the mark shown on the left plus precautionary notes. Be sure to observe the precautions.
- Be sure to observe the "Safety Information" given in the Operator's Manual.

2. Before starting the procedures, be sure to unplug the power cord.



- This product contains a high-voltage unit and a circuit with a large current capacity that may cause an electric shock or burn.
- The product also contains parts that can jerk suddenly and cause injury.
- If this product uses a laser, laser beam leakage may cause eye damage or blindness.

3. Do not throw toner or the toner bottle into a fir.



- Do not throw toner or the toner bottle (Imaging Cartridge) into a fire. Toner expelled from the fire may cause burns.

4. Use the specified parts.



- For replacement parts, always use the genuine parts specified in the manufacturer's parts manual. Installing a wrong or unauthorized part could cause dielectric breakdown, overload, or undermine safety devices resulting in possible electric shock or fire.
- Replace a blown electrical fuse or thermal fuse with its corresponding genuine part specified in the manufacturer's parts manual. Installing a fuse of a different make or rating could lead to a possible fire. If a thermal fuse blows frequently, the temperature control system may have a problem and action must be taken to eliminate the cause of the problem.

5. Handle the power cord with care and never use a multiple outlet.



- Do not break, crush or otherwise damage the power cord. Placing a heavy object on the power cord, or pulling or bending it may damage it, resulting in a possible fire or electric shock.
- Do not use a multiple outlet to which any other appliance or machine is connected.
- Be sure the power outlet meets or exceeds the specified capacity.

6. Be careful with the high-voltage parts.



- A part marked with the symbol shown on the left carries a high voltage. Touching it could result in an electric shock or burn. Be sure to unplug the power cord before servicing this part or the parts near it.

7. Do not work with wet hands.



- Do not unplug or plug in the power cord, or perform any kind of service or inspection with wet hands. Doing so could result in an electric shock.

8. Do not touch a high-temperature part.



- A part marked with the symbol shown on the left and other parts such as the exposure lamp and fusing roller can be very hot while the machine is energized. Touching them may result in a burn.
- Wait until these parts have cooled down before replacing them or any surrounding parts.

9. Maintain a grounded connection at all times. (This item may not apply in the USA.)



- Be sure to connect the ground wire to the ground terminal even when performing an inspection or repair. Without proper grounding, electrical leakage could result in an electric shock or fire.
- Never connect the ground wire to a gas pipe, water pipe, telephone ground wire, or a lightning conductor.

10. Do not remodel the product.



- Modifying this product in a manner not authorized by the manufacturer may result in a fire or electric shock. If this product uses a laser, laser beam leakage may cause eye damage or blindness.

11. Restore all parts and harnesses to their original positions.

- To promote safety and prevent product damage, make sure the harnesses are returned to their original positions and properly secured in their clamps and saddles in order to avoid hot parts, high-voltage parts, sharp edges, or being crushed.
- To promote safety, make sure that all tubing and other insulating materials are returned to their original positions. Make sure that floating components mounted on the circuit boards are at their correct distance and position off the boards.

1-2. Caution

CAUTION

1. Precautions for Service Jobs.

- A toothed washer and spring washer, if used originally, must be reinstalled. Omitting them may result in contact failure which could cause an electric shock or fire.
- When reassembling parts, make sure that the correct screws (size, type) are used in the correct places. Using the wrong screw could lead to stripped threads, poorly secured parts, poor insulating or grounding, and result in a malfunction, electric shock or injury.
- Take great care to avoid personal injury from possible burrs and sharp edges on the parts, frames and chassis of the product.
- When moving the product or removing an option, use care not to injure your back or allow your hands to be caught in mechanisms.

2. Precautions for Servicing with Covers and Parts Removed.

- Wherever feasible, keep all parts and covers mounted when energizing the product.
- If energizing the product with a cover removed is absolutely unavoidable, do not touch any exposed live parts and use care not to allow your clothing to be caught in the moving parts. Never leave a product in this condition unattended.
- Never place disassembled parts or a container of liquid on the product. Parts falling into, or the liquid spilling inside, the mechanism could result in an electric shock or fire.
- Never use a flammable spray near the product. This could result in a fire.
- Make sure the power cord is unplugged before removing or installing circuit boards or plugging in or unplugging connectors.
- Always use the interlock switch actuating jig to actuate an interlock switch when a cover is opened or removed. The use of folded paper or some other object may damage the interlock switch mechanism, possibly resulting in an electric shock, injury or blindness.

3. Precautions for the Working Environment.



- The product must be placed on a flat, level surface that is stable and secure.
- Never place this product or its parts on an unsteady or tilting workbench when servicing.
- Provide good ventilation at regular intervals if a service job must be done in a confined space for a long period of time.
- Avoid dusty locations and places exposed to oil or steam.
- Avoid working positions that may block the ventilation ports of the product.

4. Precautions for Handling Batteries. (Lithium, Nickel-Cadmium, etc.)



- Replace a rundown battery with the same type as specified in the manufacturer's parts manual.
- Before installing a new battery, make sure of the correct polarity of the installation or the battery could burst.
- Dispose of used batteries according to the local regulations. Never dispose of them at the user's premises or attempt to try to discharge one.

5. Precautions for the Laser Beam. (Only for Products Employing a Laser)



- Removing the cover marked with the caution label could lead to possible exposure to the laser beam, resulting in eye damage or blindness. Be sure to unplug the power cord before removing this cover.
- If removing this cover while the power is ON is unavoidable, be sure to wear protective laser goggles that meet specifications.
- Make sure that no one enters the room when the machine is in this condition.
- When handling the laser unit, observe the "Precautions for Handling Laser Equipment."

6. Precautions for storage the toner or imaging cartridge.



- Be sure to keep the toner or imaging cartridge out of the reach of children. Licking the imaging cartridge or ingesting its contents is harmful to your health.

1-3. Other Precautions

- When handling circuit boards, observe the "HANDLING of PWBs".
- The PC Drum is a very delicate component. Observe the precautions given in "HANDLING OF THE PC DRUM" because mishandling may result in serious image problems.
- Note that replacement of a circuit board may call for readjustments or resetting of particular items, or software installation.

1-4. Used Batteries Precautions

ALL Areas

CAUTION

Danger of explosion if battery is incorrectly replaced.
Replace only with the same or equivalent type recommended by the manufacturer.
Dispose of used batteries according to the manufacturer's instructions.

Germany

VORSICHT!

Explosionsgefahr bei unsachgemäßem Austausch der Batterie.
Ersatz nur durch denselben oder einen vom Hersteller empfohlenen gleichwertigen Typ.
Entsorgung gebrauchter Batterien nach Angaben des Herstellers.

France

ATTENTION

Il y a danger d'explosion s'il y a remplacement incorrect de la batterie.
Remplacer uniquement avec une batterie du même type ou d'un type équivalent recommandé par le constructeur.
Mettre au rebut les batteries usagées conformément aux instructions du fabricant.

Denmark

ADVARSEL!

Lithiumbatteri - Eksplosionsfare ved fejlagtig håndtering.
Udskiftning må kun ske med batteri af samme fabrikat og type.
Levér det brugte batteri tilbage til leverandøren.

Finland, Sweden

VAROITUS

Paristo voi räjähtää, jos se on virheellisesti asennettu.
Vaihda paristo ainoastaan laitevalmistajan suosittelemaan tyyppiin.
Hävitä käytetty paristo valmistajan ohjeiden mukaisesti.

VARNING

Explosionsfara vid felaktigt batteribyte.
Använd samma batterityp eller en ekvivalent typ som rekommenderas av apparattillverkaren.
Kassera använt batteri enligt fabrikantens instruktion.

Norway

ADVARSEL

Eksplosjonsfare ved feilaktig skifte av batteri.
Benytt samme batteritype eller en tilsvarende type anbefalt av apparatfabrikanten.
Brukte batterier kasseres i henhold til fabrikantens instruksjoner.

1-5. Precautions for Service

- When performing inspection and service procedures, observe the following precautions to prevent mishandling of the machine and its parts.

✻ Depending on the model, some of the precautions given in the following do not apply.

1. Precautions Before Service

- When the user is using a word processor or personal computer from a wall outlet of the same line, take necessary steps to prevent the circuit breaker from opening due to overloads.
- Never disturb the LAN by breaking or making a network connection, altering termination, installing or removing networking hardware or software, or shutting down networked devices without the knowledge and express permission of the network administrator or the shop supervisor.

2. How to Use this Book

< DIS/REASSEMBLY, ADJUSTMENT >

- To reassemble the product, reverse the order of disassembly unless otherwise specified.

< TROUBLESHOOTING >

- If a component on a PWB or any other functional unit including a motor is defective, the text only instructs you to replace the whole PWB or functional unit and does not give troubleshooting procedures applicable within the defective unit.
- All troubleshooting procedures contained herein assume that there are no breaks in the harnesses and cords and all connectors are plugged into the right positions.
- The procedures preclude possible malfunctions due to noise and other external causes.

3. Precautions for Service

- Check the area surrounding the service site for any signs of damage, wear or need of repair.
- Keep all disassembled parts in good order and keep tools under control so that none will be lost or damaged.
- After completing a service job, perform a safety check. Make sure that all parts, wiring and screws are returned to their original positions.
- Do not pull out the toner hopper while the toner bottle is turning. This could result in a damaged motor or locking mechanism.
- If the product is to be run with the front door open, make sure that the toner hopper is in the locked position.
- Do not use an air gun or vacuum cleaner for cleaning the ATDC Sensor and other sensors, as they can cause electrostatic destruction. Use a blower brush and cloth. If a unit containing these sensors is to be cleaned, first remove the sensors from the unit.

4. Precautions for Dis/Reassembly

- Be sure to unplug the copier from the outlet before attempting to service the copier.
- The basic rule is not to operate the copier anytime during disassembly. If it is absolutely necessary to run the copier with its covers removed, use care not to allow your clothing to be caught in revolving parts such as the timing belt and gears.
- Before attempting to replace parts and unplug connectors, make sure that the power cord of the copier has been unplugged from the wall outlet.
- Be sure to use the Interlock Switch Actuating Jig whenever it is necessary to actuate the Interlock Switch with the covers left open or removed.
- While the product is energized, do not unplug or plug connectors into the circuit boards or harnesses.
- Never use flammable sprays near the copier.
- A used battery should be disposed of according to the local regulations and never be discarded casually or left unattended at the user's premises.
- When reassembling parts, make sure that the correct screws (size, type) and toothed washer are used in the correct places.

5. Precautions for Circuit Inspection

- Never create a closed circuit across connector pins except those specified in the text and on the printed circuit.
- When creating a closed circuit and measuring a voltage across connector pins specified in the text, be sure to use the GND wire.

6. Handling of PWBs

< During Transportation/Storage >

- During transportation or when in storage, new P.W. Boards must not be indiscriminately removed from their protective conductive bags.
- Do not store or place P.W. Boards in a location exposed to direct sunlight and high temperature.
- When it becomes absolutely necessary to remove a Board from its conductive bag or case, always place it on its conductive mat in an area as free as possible from static electricity.
- Do not touch the pins of the ICs with your bare hands.
- Protect the PWBs from any external force so that they are not bent or damaged.

< During Inspection/Replacement >

- Avoid checking the IC directly with a multimeter; use connectors on the Board.
- Never create a closed circuit across IC pins with a metal tool.
- Before unplugging connectors from the P.W. Boards, make sure that the power cord has been unplugged from the outlet.
- When removing a Board from its conductive bag or conductive case, do not touch the pins of the ICs or the printed pattern. Place it in position by holding only the edges of the Board.
- When touching the PWB, wear a wrist strap and connect its cord to a securely grounded place whenever possible. If you cannot wear a wrist strap, touch a metal part to discharge static electricity before touching the PWB.
- Note that replacement of a PWB may call for readjustments or resetting of particular items.

7. Handling of Other Parts

- The magnet roller generates a strong magnetic field. Do not bring it near a watch, floppy disk, magnetic card, or CRT tube.

8. Handling of the PC Drum

✻ Only for Products Not Employing an Imaging Cartridge.

< During Transportation/Storage >

- Use the specified carton whenever moving or storing the PC Drum.
- The storage temperature is in the range between –20°C and +40°C.
- In summer, avoid leaving the PC Drum in a car for a long time.

< Handling >

- Ensure that the correct PC Drum is used.
- Whenever the PC Drum has been removed from the copier, store it in its carton or protect it with a Drum Cloth.
- The PC Drum exhibits greatest light fatigue after being exposed to strong light over an extended period of time. Never, therefore, expose it to direct sunlight.
- Use care not to contaminate the surface of the PC Drum with oil-base solvent, fingerprints, and other foreign matter.
- Do not scratch the surface of the PC Drum.
- Do not apply chemicals to the surface of the PC Drum.
- Do not attempt to wipe clean the surface of the PC Drum.

If, however, the surface is contaminated with fingerprints, clean it using the following procedure.

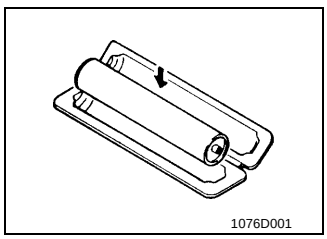

A. Place the PC Drum into one half of its carton.

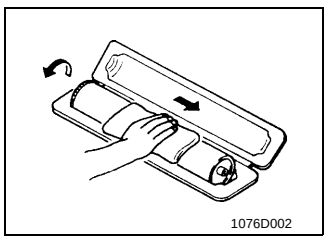

B. Gently wipe the residual toner off the surface of the PC Drum with a dry, Dust-Free Cotton Pad.

- Turn the PC Drum so that the area of its surface on which the line of toner left by the Cleaning Blade is present is facing straight up. Wipe the surface in one continuous movement from the rear edge of the PC Drum to the front edge and off the surface of the PC Drum.
- Turn the PC Drum slightly and wipe the newly exposed surface area with a CLEAN face of the Dust-Free Cotton Pad. Repeat this procedure until the entire surface of the PC Drum has been thoroughly cleaned.

✻ At this time, always use a CLEAN face of the dry Dust-Free Cotton Pad until no toner is evident on the face of the Pad after wiping.

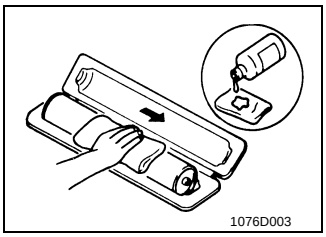

C. Soak a small amount of either ethyl alcohol or isopropyl alcohol into a clean, unused Dust-Free Cotton Pad which has been folded over into quarters. Now, wipe the surface of the PC Drum in one continuous movement from its rear edge to its front edge and off its surface one to two times.

✻ Never move the Pad back and forth.

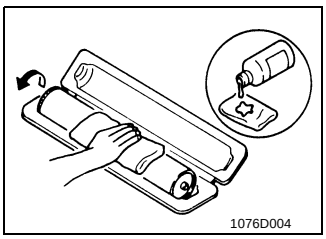

D. Using the SAME face of the Pad, repeat the procedure explained in the latter half of step 3 until the entire surface of the PC Drum has been wiped. Always OVERLAP the areas when wiping. Two complete turns of the PC Drum would be appropriate for cleaning.

NOTES

- *Even when the PC Drum is only locally dirtied, wipe the entire surface.*
- *Do not expose the PC Drum to direct sunlight. Clean it as quickly as possible even under interior illumination.*
- *If dirt remains after cleaning, repeat the entire procedure from the beginning one more time.*

9. Handling of the Imaging Cartridge

✻ Only for Products Employing an Imaging Cartridge.

< During Transportation/Storage >

- The storage temperature is in the range between –20°C and +40°C.
- In summer, avoid leaving the Imaging Cartridge in a car for a long time.

< Handling >

- Store the Imaging Cartridge in a place that is not exposed to direct sunlight.

< Precautionary Information on the PC Drum Inside the Imaging Cartridge >

- Use care not to contaminate the surface of the PC Drum with oil-base solvent, fingerprints, and other foreign matter.
- Do not scratch the surface of the PC Drum.
- Do not attempt to wipe clean the surface of the PC Drum.

DIS/REASSEMBLY, ADJUSTMENT

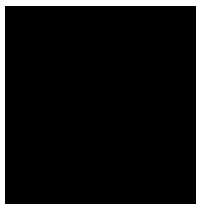

CONTENTS

1. SAFETY INFORMATION D-1
1-1. LASER SAFETY D-1
1-2. INTERNAL LASER RADIATION D-1
1-3. LASER SAFETY LABEL D-4
1-4. LASER CAUTION LABEL D-4
1-5. PRECAUTIONS FOR HANDLING THE LASER EQUIPMENT D-4
2. SERVICE INSTRUCTIONS D-5
2-1. IDENTIFICATION OF FUSES AND CIRCUIT BREAKERS D-5
2-2. PARTS WHICH MUST NOT BE TOUCHED D-6
(1) Red Painted Screws D-6
(2) Variable Resistors on Board D-6
3. DISASSEMBLY/REASSEMBLY D-7
3-1. DOORS, COVERS, AND EXTERIOR PARTS: IDENTIFICATION AND REMOVAL PROCEDURES D-7
3-2. REMOVAL OF CIRCUIT BOARDS AND OTHER ELECTRICAL COMPONENTS D-9
(1) Removal of the Master Board D-10
(2) Removal of the Control Board D-11
(3) Removal of the High Voltage Unit D-11
(4) Removal of the DC Power Supply D-13
3-3. MAINTENANCE SCHEDULE D-16
3-4. PAPER TAKE-UP/TRANSPORT SECTION D-18
(1) Removal of the Paper Separator Roll Assy and Paper Take-Up Roll D-18
(2) Cleaning of the Paper Separator Roll D-18
(3) Cleaning of the Paper Take-Up Roll D-18
(4) Cleaning of the Right and Left Synchronizing Rollers D-19
(5) Removal of the Paper Dust Remover Assy D-19
(6) Cleaning of the Paper Dust Remover D-20
(7) Cleaning of the Bypass Transport Roller D-20
3-5. OPTICAL SECTION D-21
(1) Cleaning of the Original Glass and ADF Glass D-21
(2) Cleaning of Mirrors D-21
(3) Cleaning of the Lens D-21
(4) Cleaning of the CCD Sensor D-22
(5) Cleaning of the Scanner Rails/Bushings D-22
(6) Removal of the CCD Unit D-23
(7) Removal of the Scanner, Exposure Lamp, and Inverter Board D-23
(8) Removal of the Scanner Drive Cables D-25
(9) Winding of the Scanner Drive Cables D-27
3-6. PH D-29
(1) Removal of the PH Unit D-29
(2) Cleaning of the PH Window D-29
3-7. Imaging Unit (IU) D-30
(1) Removal of the IU D-30
(2) Disassembly of the IU D-30

(3) Application of Toner D-34
(4) Replacement of the ATDC Sensor D-35
3-8. IMAGE TRANSFER SECTION D-36
(1) Removal of the Image Transfer Roller Assy D-36
(2) Cleaning of the Pre-Image Transfer Lower Guide Plate D-36
(3) Cleaning of the Charge Neutralizing Plate D-36
3-9. FUSING SECTION D-37
(1) Removal of the Fusing Unit D-37
(2) Disassembly of the Fusing Unit D-37
3-10.MULTIPLE BYPASS (MB-5): OPTION D-42
(1) Removal of the Separator Roll Assy D-42
(2) Removal of the Paper Take-Up Roll D-42
(3) Cleaning of the Separator Roll/Paper Take-Up Roll D-45
(4) Cleaning of the Paper Take-Up Roll D-45
3-11.JOB TRAY (JS-202): OPTION D-46
(1) Removal of the Main Board D-46
(2) Paper Detecting Board D-48
3-12.SHIFTING UNIT (OT-103): OPTION D-49
(1) Removal of the Main Board D-49
4. ADJUSTMENT D-51
4-1. ADJUSTMENT JIGS AND TOOLS USED D-51
4-2. TIMING BELT TENSION ADJUSTMENT D-51
4-3. ACCESSING THE FUNCTION, TECH. REP. CHOICE, AND ADJUST MODE D-52
(1) Function Mode D-52
(2) Tech. Rep. Choice Mode D-52
(3) Adjust Mode D-52
4-4. ELECTRICAL/IMAGE ADJUSTMENT D-53
(1) Edge Erase Adjustment (Leading, Trailing, and Top/Bottom Edges) D-53
(2) Loop Length Adjustment (1st and 2nd Trays, Bypass Tray) D-54
(3) Printer CD Registration Adjustment D-55
(4) Printer FD Registration Adjustment D-56
(5) Scanner CD Registration Adjustment D-57
(6) Scanner FD Registration Adjustment D-58
(7) Scanner CD Zoom Adjustment D-59
(8) Scanner FD Zoom Adjustment D-60
(9) ATDC Sensor Automatic Adjustment (F8) D-61
(10) Manual Bypass Registration Adjustment D-62
(11) Multiple Bypass Registration Adjustment (MB-5): Option D-63
4-5. OTHER ADJUSTMENTS D-64
(1) Adjustment of the Position of the Scanner and 2nd/3rd Mirrors Carriage D-64
(2) CCD Unit Position Adjustment D-65
(3) Adjustment of the Gap between the Doctor Blade and Sleeve Roller (Db Adjustment) D-66
4-6. MISCELLANEOUS D-68

(1) Remounting the EEPROM (U29) D-68
(2) Installation of the Plug-In Counter Socket (Option) D-69
(3) Installation of the Mechanical Counter (Option) D-70

1. SAFETY INFORMATION

1-1. LASER SAFETY

- This is a digital machine certified as a class 1 laser product. There is no possibility of danger from a laser, provided the machine is serviced according to the instruction in this manual.

1-2. INTERNAL LASER RADIATION

Semiconductor laser	
Maximum average radiation power(*)	26.4 µW
Wavelength	770-795 nm

*:Laser Aperture of the Print Head Unit

- This product employs a Class 3b laser diode that emits an invisible laser beam. The laser diode and the scanning polygon mirror are incorporated in the print head unit.
- The print head unit is NOT A FIELD SERVICE ITEM. Therefore, the print head unit should not be opened under any circumstances.

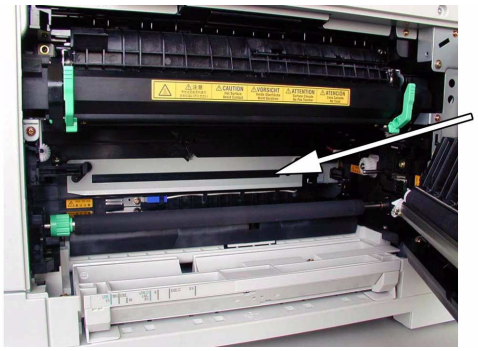

This figure Shows the view inside the Right Door with the Imaging Unit removed.

the U.S.A., Canada
(CDRH Regulation)

- This machine is certified as a Class I Laser product under Radiation Performance Standard according to the Food, Drug and Cosmetic Act of 1990. Compliance is mandatory for Laser products marketed in the United States and is reported to the Center for Devices and Radiological Health (CDRH) of the U.S. Food and Drug Administration of the U.S. Department of Health and Human Services (DHHS). This means that the device does not produce hazardous laser radiation.
- The label shown to page D-4 indicates compliance with the CDRH regulations and must be attached to laser products marketed in the United States.

CAUTION
Use of controls, adjustments or performance of procedures other than those specified in this manual may result in hazardous radiation exposure.

Semiconductor laser	
Maximum power of the laser diode	5 mW
Wavelength	770-795 nm

All Areas

CAUTION
Use of controls, adjustments or performance of procedures other than those specified in this manual may result in hazardous radiation exposure.

Semiconductor laser	
Maximum power of the laser diode	5 mW
Wavelength	770-795 nm

Denmark

ADVARSEL
Usynlig Laserstråling ved åbning, når sikkerhedsafbrydere er ude af funktion. Undgå udsættelse for stråling. Klasse 1 laser produkt der opfylder IEC60825 sikkerheds kravene.

Halvlederlaser	
Laserdiodens højeste styrke	5 mW
Bølgelængden	770-795 nm

Finland, Sweden

VARO!
Avattaessa ja suojalukitus ohitettaessa olet alttiina näkymättömälle lasersäteilylle. Älä katso säteeseen.

LOUKAN 1 LASERLAITE
KLASS 1 LASER APPARAT

VAROITUS!
Laitteen Käyttäminen muulla kuin tässä käyttöohjeessa mainitulla tavalla saattaa altistaa käyttäjän turvallisuusluokan 1 ylittävälle näkymättömälle lasersäteilylle.

Puolijohdelaser	
Laserdiodin suurin teho	5 mW
Aallonpituus	770-795 nm

VARNING!
Om apparaten används på annat sätt än i denna bruksanvisning specificerats, kan användaren utsättas för osynlig laserstrålning, som överskrider gränsen för laserklass 1.

Halvledarlaser	
Den maximala effekten för laserdioden	5 mW
Våglängden	770-795 nm

VARNING!
Osynlig laserstrålning när denna del är öppnad och spärren är urkopplad. Betrakta ej strålen.

Norway

ADVERSEL
Dersom apparatet brukes på annen måte enn spesifisert i denne bruksanvisning, kan brukeren utsettes for unsynlig laserstråling som overskrider grensen for laser klass 1.

Halvleder laser	
Maksimal effekt till laserdiode	5 mW
Bølgelengde	770-795 nm

1-3. LASER SAFETY LABEL

• A laser safety labels is attached to the outside of the machine as shown below.

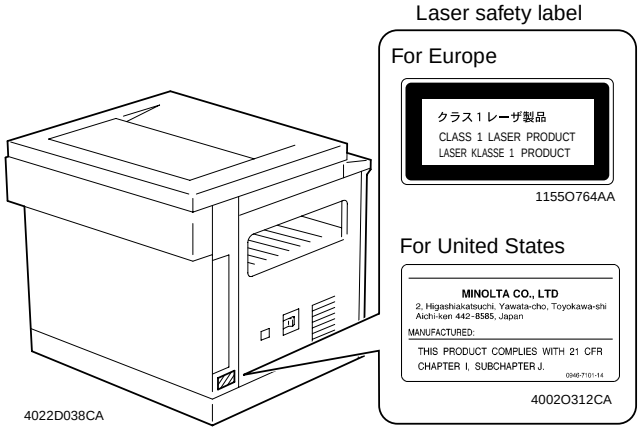

1-4. LASER CAUTION LABEL

• A laser caution label is attached to the inside of the machine as shown below.

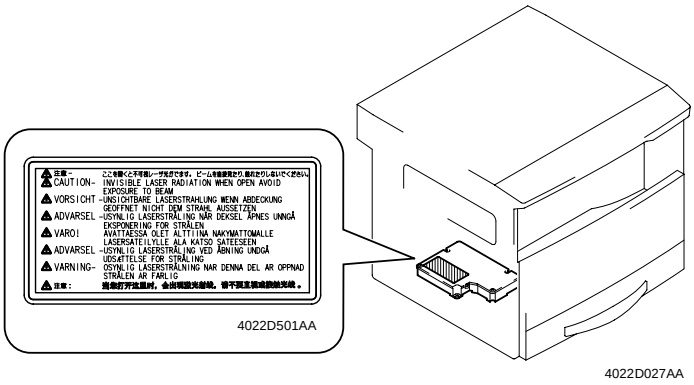

1-5. PRECAUTIONS FOR HANDLING THE LASER EQUIPMENT

• When laser protective goggles are to be used, select ones with a lens conforming to the above specifications.
• When a disassembly job needs to be performed in the laser beam path, such as when working around the printerhead and PC Drum, be sure first to turn the copier OFF.
• If the job requires that the copier be left ON, take off your watch and ring and wear laser protective goggles.
• A highly reflective tool can be dangerous if it is brought into the laser beam path. Use utmost care when handling tools on the user's premises.

2. SERVICE INSTRUCTIONS

2-1. IDENTIFICATION OF FUSES AND CIRCUIT BREAKERS

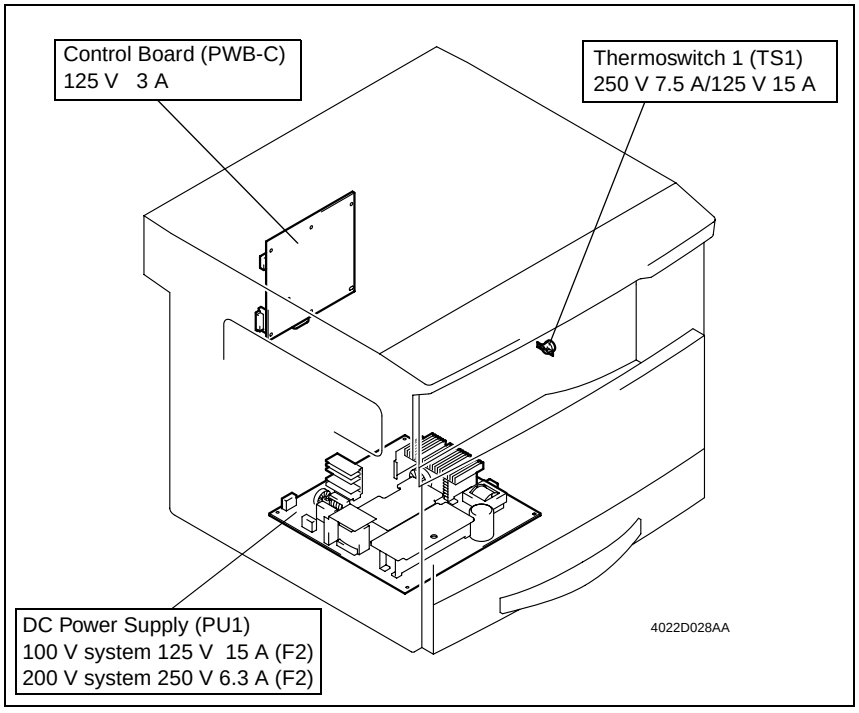

2-2. PARTS WHICH MUST NOT BE TOUCHED

(1) Red Painted Screws

Purpose of Application of Red Paint
Red painted screws show that the assembly or unit secured can only be adjusted or set at the factory and shall not be readjusted, set, or removed in the field.
If it becomes unavoidably necessary to disassemble any of these assemblies and units, disassembly may be done provided that the conditions permitting reassembly are met.
Note also that when two or more screws are used on the part in question, only one representative screw may be marked with red paint.

(2) Variable Resistors on Board

Do not turn the variable resistors on boards for which no adjusting instructions are given in "ADJUSTMENT."
Other Screws not Marked with Red Paint
<PH Unit>

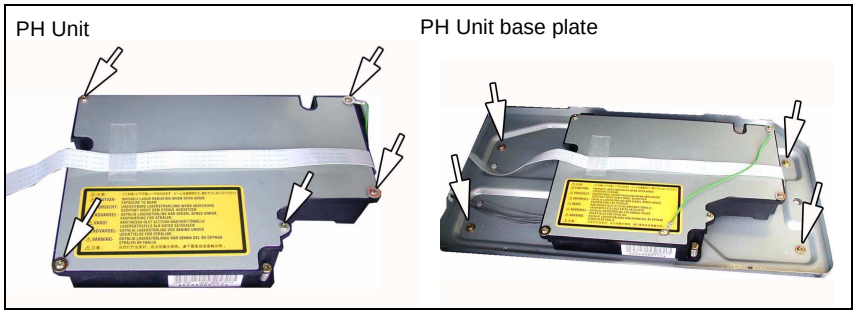

<IR Unit>

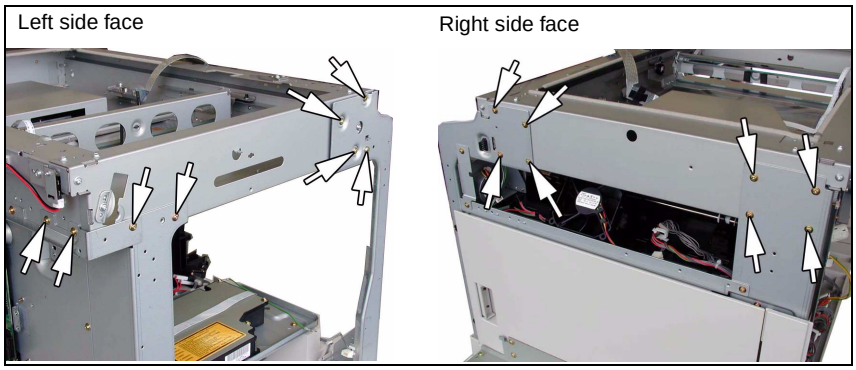

3. DISASSEMBLY/REASSEMBLY

3-1. DOORS, COVERS, AND EXTERIOR PARTS: IDENTIFICATION AND REMOVAL PROCEDURES



No.	Part Name	Removal Procedure
1	Original Cover	Pull the Original Cover straight up.
2	Original Glass	Remove no. 18. → Remove two holding brackets or no. 11 and the Original Glass.
3	Control Panel	Remove two control panel mounting screws. → Remove two ground wire mounting screws. → Remove one flat cable and unplug one connector.
4	Right Inside Cover	Remove no. 5. → Remove one Right Inside Cover mounting screw.
5	Front Cover	Remove no. 3. → Open the Front Door and remove six Front Cover mounting screws.
6	Front Door	Open the Front Door and remove one band mounting screw. → Snap off one C-clip.
7	1st Tray	Slide out the 1st Tray. → Remove the fixing brackets on the right and left.
8	Left Cover	Remove no. 3. → Remove no. 5. → Remove no. 14. → Remove five Left Cover mounting screws.
9	Upper Cover	Remove no. 3. → Remove no. 5. → Remove no. 14. → Remove no. 8. → Remove two screws and two Upper Cover mounting screws.
10	Rear Inside Cover	Remove no. 3. → Remove no. 5. → Remove no. 14. → Remove no. 8. → Remove no. 9. → Remove no. 4. → Remove two Rear Inside Cover mounting screws.
11	ADF Glass	Remove two ADF Glass mounting screws.
12	Left Hinge	Remove no. 14. → Remove three Left Hinge mounting screws.
13	Right Hinge	Remove no. 14. → Remove three Right Hinge mounting screws.
14	Rear Cover	Remove six Rear Cover mounting screws.
15	Rear Right Cover	Remove no. 14. → Remove one Rear Right Cover mounting screw.
16	Multiple Bypass Cover (when the option is mounted)	Remove two Multiple Bypass Cover mounting screws.
17	Right Door	Remove no. 14. → Remove no. 15. → Remove three Right Door mounting screws.
18	Right Cover	Remove no. 3. → Remove no. 5. → Remove no. 14. → Remove four Right Cover mounting screws.

3-2. REMOVAL OF CIRCUIT BOARDS AND OTHER ELECTRICAL COMPONENTS

- When removing a circuit board or other electrical component, refer to “PRECAUTIONS FOR HANDLING THE PWBs” and follow the corresponding removal procedures.
- The removal procedures given in the following omit the removal of connectors and screws securing the circuit board support or circuit board.
- Where it is absolutely necessary to touch the ICs and other electrical components on the board, be sure to ground your body.

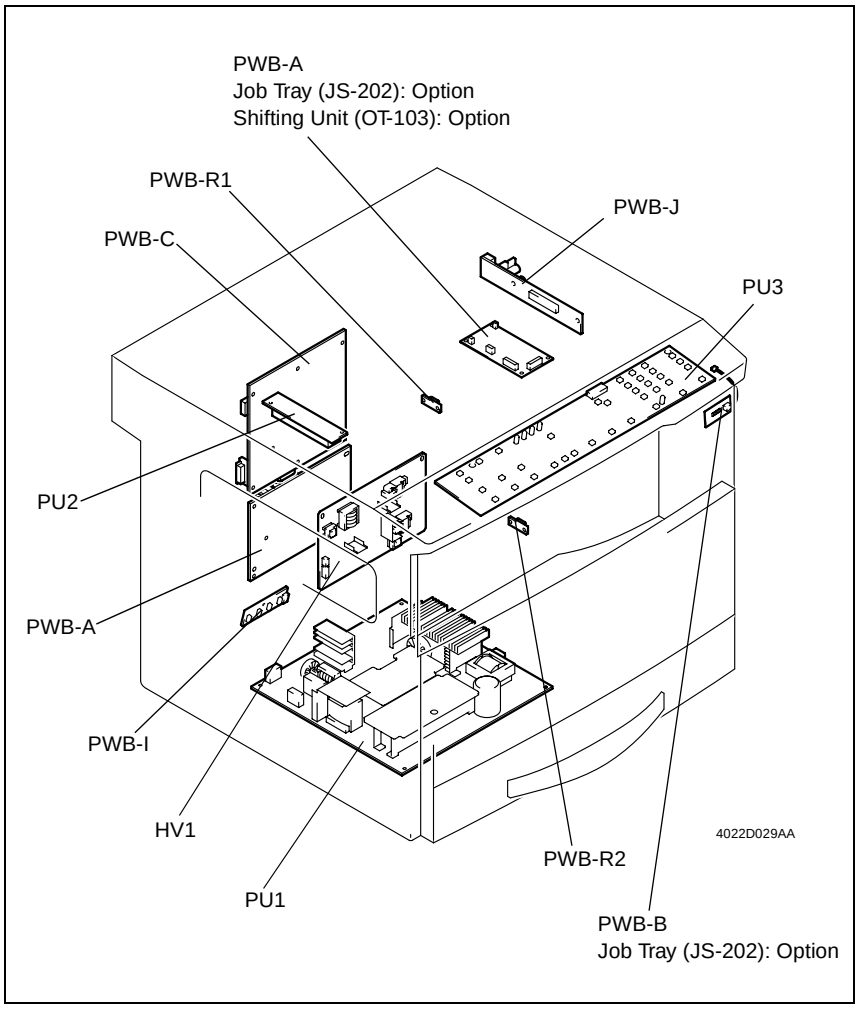

Symbol	Part Name	Removal Procedure
PWB-A	Master Board	☞ D-10
PWB-C	Control Board	☞ D-11
PWB-I	Paper Size Detecting Board	Remove the Rear Cover. → Remove the PWB Assy. → Remove two screws and the PWB-I Assy. → PWB-I
PWB-J	CCD Board	☞ D-23 ✻ Remove the CCD Unit as a unit.
PWB-R1	Fusing Board	Remove the Fusing Unit. → PWB-R1
PWB-R2	Pre-Image Transfer Board	Open the Right Door. → PWB-R2
PU1	DC Power Supply	☞ D-13
PU2	Inverter Board	☞ D-23
PU3	Control Panel	Remove two control panel mounting screws. → Remove two ground wire mounting screws. → Remove one flat cable and unplug one connector. → PU3
HV1	High Voltage Unit	☞ D-11

Job Tray (JS-202): Option

Symbol	Part Name	Removal Procedure
PWB-A	Main Board	☞ D-46
PWB-B	Paper Detecting Board	☞ D-48

Shifting Unit (OT-103): Option

Symbol	Part Name	Removal Procedure
PWB-A	Main Board	☞ D-49

(1) Removal of the Master Board

1. Remove the Rear Cover.
2. Remove 12 screws and the PWB Cover Assy.

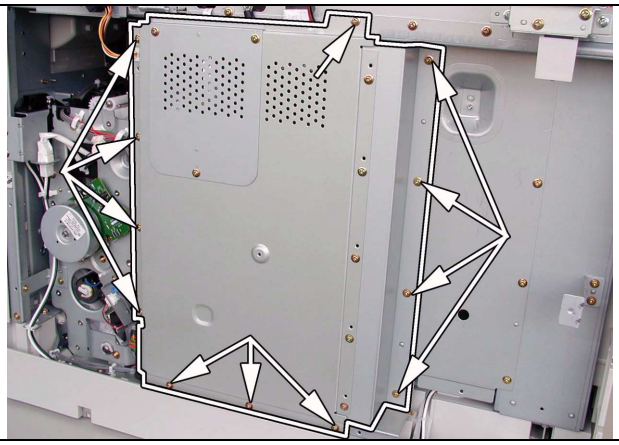

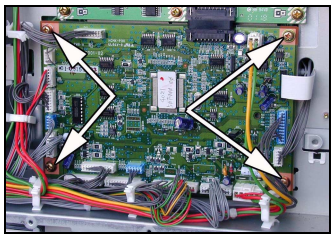

3. Unplug all connectors (but PJ20) from the Master Board.
4. Remove four screws and the Master Board.

(2) Removal of the Control Board

1. Remove the Rear Cover.
2. Remove the PWB Cover Assy.

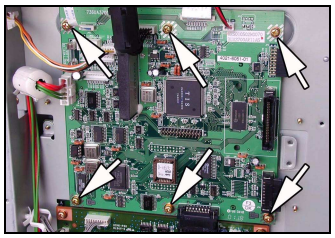

3. Unplug all connectors from the Control Board.
4. Remove six screws and the Control Board.

(3) Removal of the High Voltage Unit

1. Remove the control panel, Front Cover, Rear Cover, Left Cover, Upper Cover, Right Inside Cover, and Rear Inside Cover.
2. Remove the PWB Cover Assy.
3. Unplug all connectors from the Master Board (except for PJ20) and from the Control Board.
4. Remove the harness from seven wiring saddles and two edge covers.

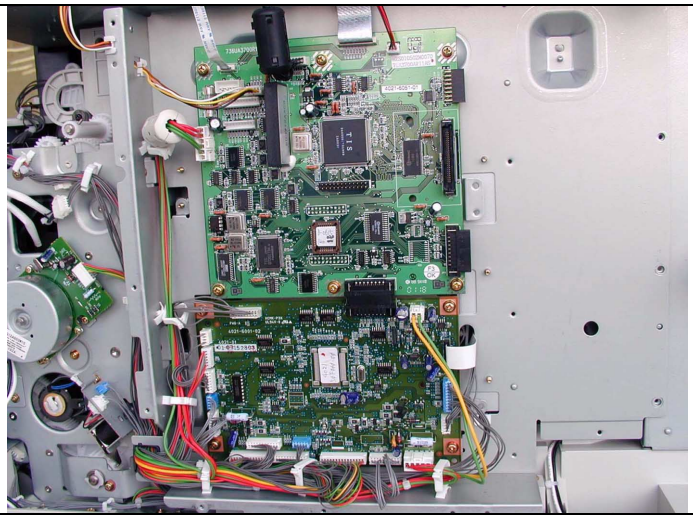

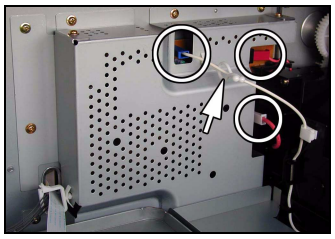

5. Unplug three connectors from the High Voltage Unit and remove the harness from one wiring saddle.

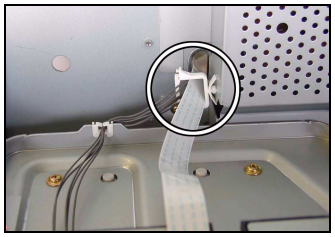

6. Remove the harness from one wiring saddle.

7. Remove ten screws and the PWB Assy.

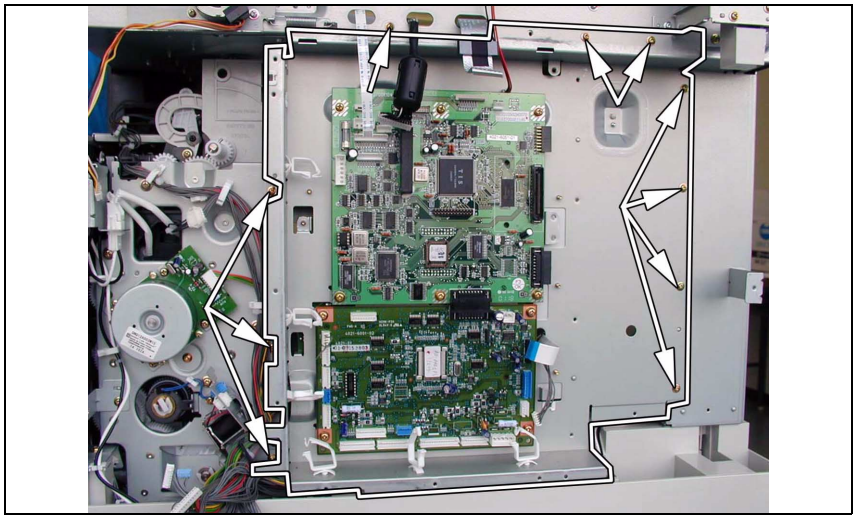

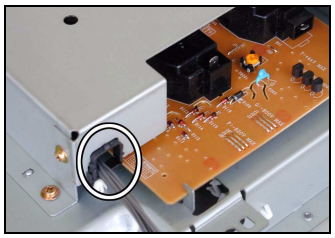

8. Remove the harness from one wiring saddle of the High Voltage Unit cover.

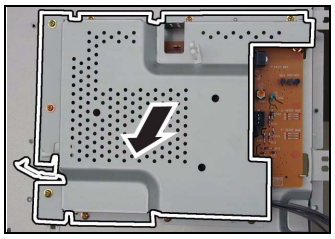

9. Remove nine screws and the High Voltage Unit cover.

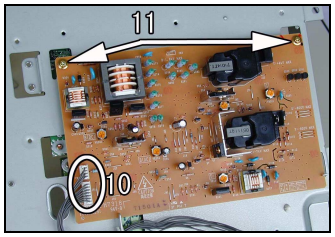

10. Unplug two connectors from the High Voltage Unit.
11. Remove two screws and the High Voltage Unit.

(4) Removal of the DC Power Supply

1. Remove the control panel, Front Cover, Rear Cover, Left Cover, and Upper Cover.

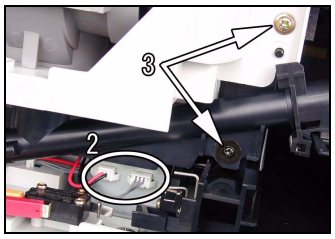

2. Unplug two connectors of the Hopper Assy.
3. Remove two Hopper mounting screws on the right.

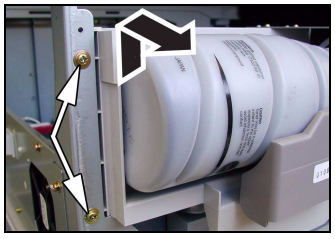

4. Remove two Hopper mounting screws on the left and the Hopper Assy.

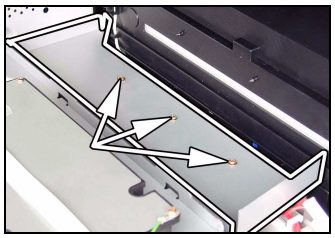

5. Remove three screws and the Power Supply Right Cover.

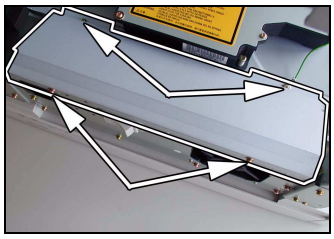

6. Remove four screws and the Power Supply Left Cover.

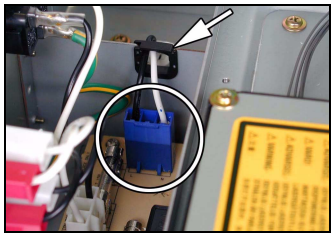

7. Unplug one connector and remove the harness from one edge cover.

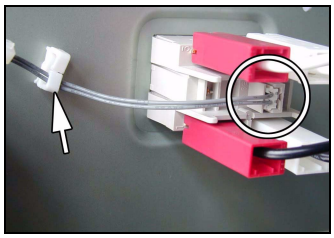

8. Unplug one connector and remove the harness from one wiring saddle.

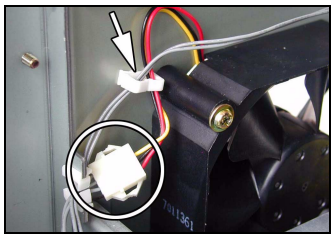

9. Unplug one connector and remove the harness from one wiring saddle.

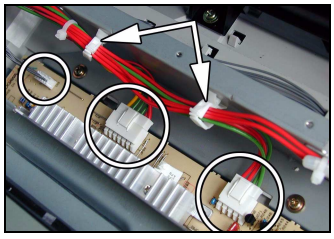

10. Unplug three connectors and remove the harness from two wiring saddles.

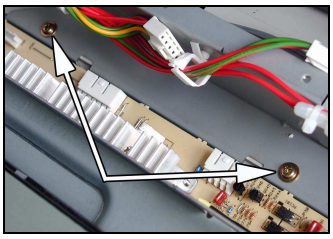

11. Remove two screws.

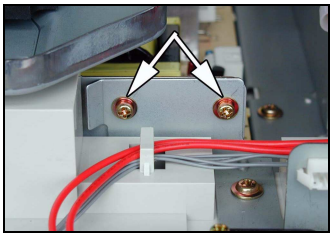

12. Remove two screws.

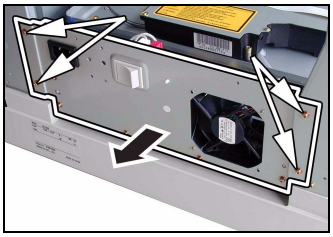

13. Remove four screws and the DC Power Supply.

3-3. MAINTENANCE SCHEDULE

	PM Parts	Maintenance Cycle (K)		Part No.	Qty	Ref. Page	Counter (*3)	Associated Problems
		Clean	Replace					
Paper Take-Up/ Transport Section	Paper Take-Up Roll (1st Tray)	When a malfunction occurs	150	4021-3012-XX	1	☞ D-18	1st Tray	Paper take-up failure, double feed
	Paper Separator Roll Assy		150	4658-0151-XX	1	☞ D-18		Double feed
	Multi Bypass Paper Take-Up Roll (Multiple Bypass)		150	4687-3257-XX	1	☞ D-42	Bypass Tray	Paper take-up failure, double feed
	Multi Bypass Separator Roll Assy (Multiple Bypass)		150	4658-0151-XX	1	☞ D-42		Double feed
	Paper Dust Remover Assy (*1)		40	4021-0151-XX	1	☞ D-19	IU Life	Failure to remove toner off completely, filming
	Right Synchronizing Roller		—	—	—	☞ D-19	—	Dirty image
	Left Synchronizing Roller		—	—	—	☞ D-19		Dirty image
	Bypass Transport Roller		—	—	—	☞ D-20		Paper misfeed
Optical Section	Mirrors and lens	80	—	—	—	☞ D-21	IR	
	Scanner rails/bushings	80	—	—	—	☞ D-22		
	Original Glass	80	—	—	—	☞ D-21		
PH Section	PH window	When a malfunction occurs	—	—	—	☞ D-29	—	Image noise (white lines)
Imaging Unit (*2)	PC Drum	When a malfunction occurs	40	—	1	☞ D-30	IU Life	Image noise (white lines)
	Cleaning Blade	—	40	4163-5602-XX	1	☞ D-32		
	PC Drum Paper Separator Finger	40	—	—	—	☞ D-32		
	PC Drum Charge Corona Assy	—	40	4021-0306-XX	1	☞ D-32		
	Developer (starter)	—	40	—	1	☞ D-33		
	Ds collar	40	—	—	—	☞ D-33		

	PM Parts	Maintenance Cycle (K)		Part No.	Qty	Ref. Page	Counter (*3)	Associated Problems
		Clean	Replace					
Imaging Unit (*2)	Developer Scattering Prevention Plate	40	—	—	—	☞ D-33	IU Life	
	Charge Neutralizing Sheet	—	40	4163-4302-XX	1	☞ D-32		
	Pre-Image Transfer Upper Guide Plate	40	—	—	—	☞ D-34		
	Ozone Filter (Europe)	—	150	1156-4118-XX	1	☞ D-31		
	(Areas other than Europe)		300			☞ D-31	Ozone Filter	
Image Transfer Section	Image Transfer Roller Assy	—	150	4021-0315-XX	1	☞ D-36	Image Transfer Roller/ Fusing Unit	
	Pre-Image Transfer Lower Guide Plate	When a malfunction occurs	—	—	—	☞ D-36	—	Dirty image
	Charge Neutralizing Plate		—	—	—	☞ D-36	—	Misfeed due to paper not properly separated from PC Drum
Fusing Section	Fusing Unit (100-V system)	—	150	4021-0321-XX	1	☞ D-37	Image Transfer Roller/ Fusing Unit	
	(200-V system)	—	150	4021-0322-XX	1	☞ D-37		

*1: Replace at 40K for recommended plain paper. Clean when the Paper Dust Remover is full of paper dust for paper of other types.
*2: The life of the Imaging Unit (except for the Ozone Filter) is determined by the period of time through which the PC Drum has turned (as translated to an equivalent distance traveled). The maintenance cycle in the table represents the number of copies made in the standard copy mode (A4C, 2PJ) which may differ depending on conditions in which the copiers are used among different users.
*3: For details, see SWITCHES ON PWBs, TECH. REP. SETTINGS.

NOTE
- *k = 1,000 copies*
- *The contents of this maintenance schedule are subject to change without notice.*
- *For part numbers, see Parts Manual and Parts Modification Notice.*

3-4. PAPER TAKE-UP/TRANSPORT SECTION

(1) Removal of the Paper Separator Roll Assy and Paper Take-Up Roll

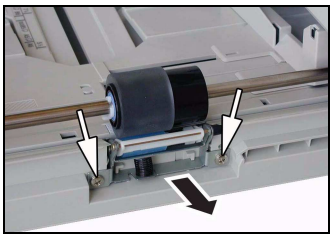

1. Slide out the 1st Tray.
2. Remove two screws and the Paper Separator Roll Assy.

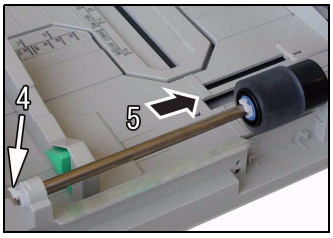

3. Press down the Paper Lifting Plate.
4. Snap off one C-clip from the Paper Take-Up Roll Assy.
5. Slide the Paper Take-Up Roll Assy to the rear so that it can be pulled off the bushing at the front.

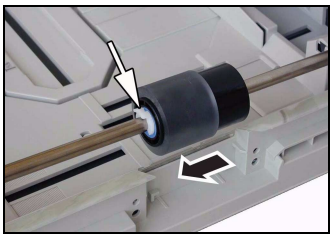

6. Snap off one C-clip and remove the Paper Take-Up Roll.

(2) Cleaning of the Paper Separator Roll

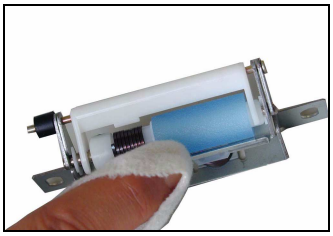

1. Remove the Paper Separator Roll Assy.
2. Using a soft cloth dampened with alcohol, wipe the Paper Separator Roll clean of dirt.

(3) Cleaning of the Paper Take-Up Roll

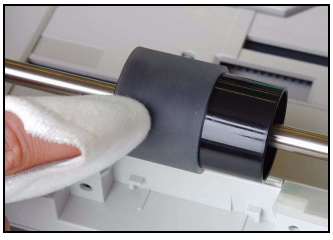

1. Slide out the 1st Tray.
2. Remove the Paper Separator Roll Assy.
3. Using a soft cloth dampened with alcohol, wipe the Paper Take-Up Roll clean of dirt.

(4) Cleaning of the Right and Left Synchronizing Rollers

1. Remove the Imaging Unit.



2. Using a soft cloth dampened with alcohol, wipe the Right and Left Synchronizing Rollers clean of dirt.

(5) Removal of the Paper Dust Remover Assy

1. Remove the Imaging Unit.

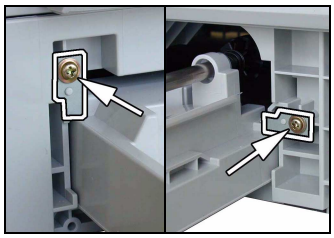

2. Remove two screws and the stopper.
3. Remove the 1st Tray.
4. Remove one screw and the Synchronizing Roller Sensor Assy.

NOTE

- *Do not unplug the sensor harness connector.*

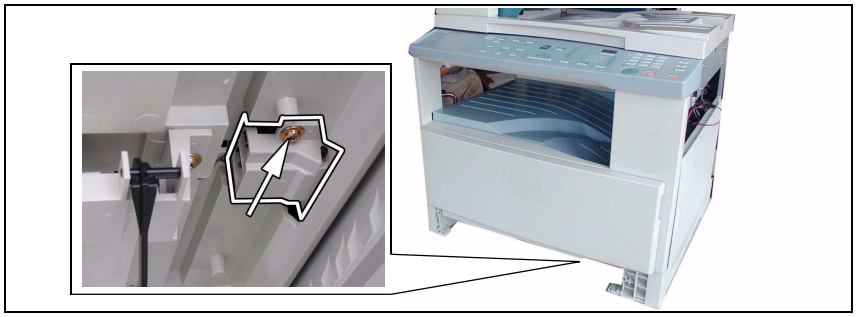

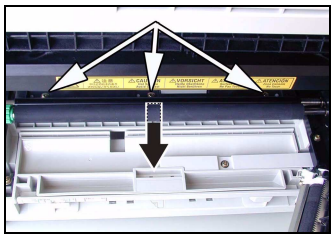

5. Remove three screws and the Paper Dust Remover Assy.

(6) Cleaning of the Paper Dust Remover



1. Remove the Paper Dust Remover Assy.
2. Using a brush, whisk dust and dirt off the Paper Dust Remover.

(7) Cleaning of the Bypass Transport Roller

1. Remove the Imaging Unit.
2. Remove two screws, unplug one connector, and remove the Bypass Transport Roller Assy.

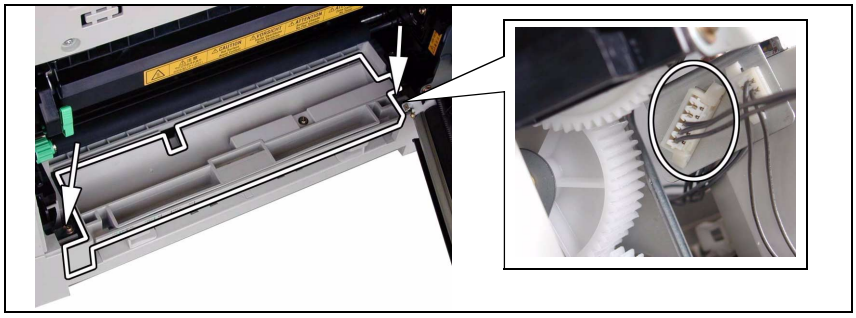

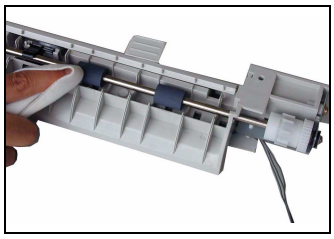

3. Using a soft cloth dampened with alcohol, wipe the Bypass Transport Roller clean of dirt.



4. Using a soft cloth dampened with alcohol, wipe the rolls clean of dirt.

3-5. OPTICAL SECTION

(1) Cleaning of the Original Glass and ADF Glass



1. Using a soft cloth dampened with alcohol, wipe the Original Glass and ADF Glass clean of dirt.

(2) Cleaning of Mirrors

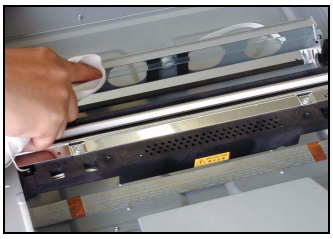

1. Remove the Original Glass.
2. Using a soft cloth dampened with alcohol, wipe the mirrors clean of dirt.

(3) Cleaning of the Lens

1. Remove the Original Glass.
2. Remove 15 screws and the CCD Unit cover.

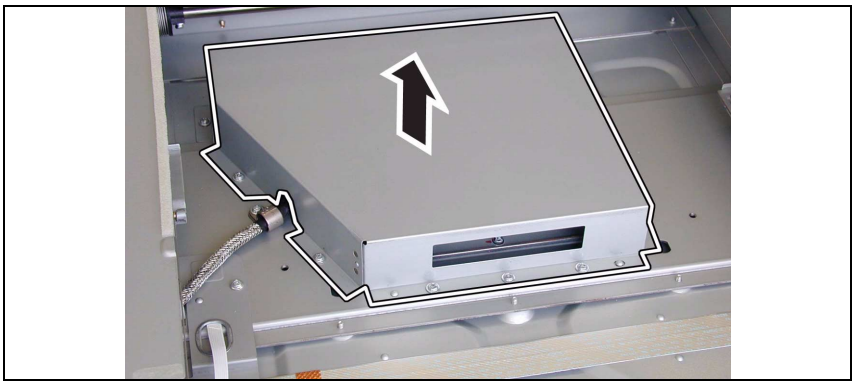

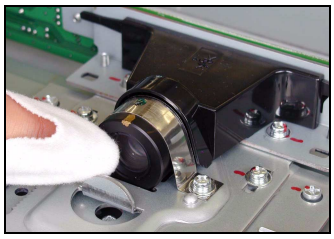

3. Using a soft cloth dampened with alcohol, wipe the Lens clean of dirt.

(4) Cleaning of the CCD Sensor

1. Remove the Original Glass.
2. Remove 15 screws and the CCD Unit cover.

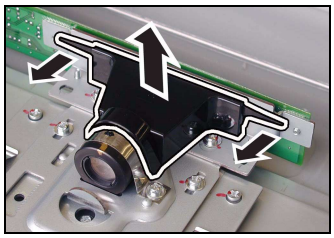

3. Remove the Lens cover.



4. Using a soft cloth dampened with alcohol, wipe the CCD Sensor clean of dirt.

(5) Cleaning of the Scanner Rails/Bushings

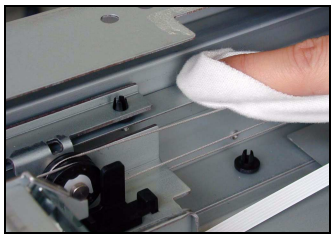

1. Remove the Original Glass.
2. Using a soft cloth dampened with alcohol, wipe the Scanner rails/bushings clean of dirt.

NOTE

- *After the Scanner rails/bushings have been cleaned, apply oil (copier lubricant A or FLOIL 947P).*

(6) Removal of the CCD Unit

1. Remove the Original Glass.
2. Remove 15 screws and the CCD Unit cover.

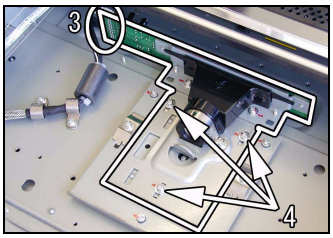

3. Unplug one connector.
4. Remove three screws and the CCD Unit.

NOTE
- *NEVER attempt to loosen or remove screws that are not specified when removing the CCD Unit.*

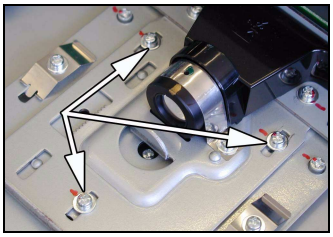

<<Reinstallation of the CCD Unit>>
- Temporarily secure the CCD Unit with each of the screws at the center of each slot.
- After the CCD Unit has been installed, adjust the position of the CCD Unit.

☞ D-65

(7) Removal of the Scanner, Exposure Lamp, and Inverter Board

1. Remove the control panel, Front Cover, Rear Cover, and Original Glass.
2. Remove the foam seal and mylar, one each at the front and rear.

NOTE
- *Ready a new foam seal and mylar and affix them after the procedure.*

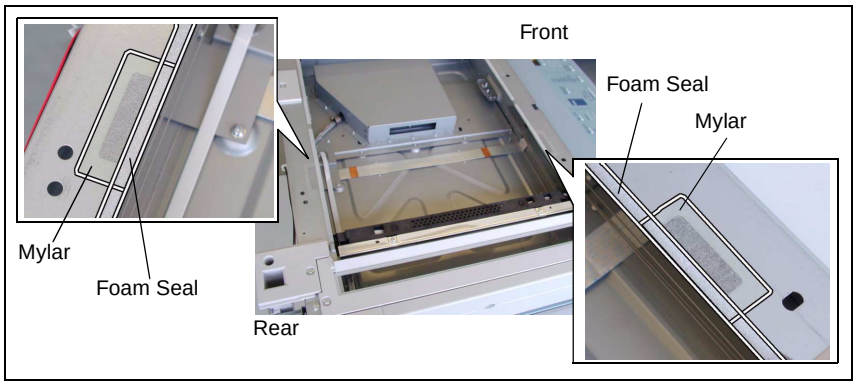

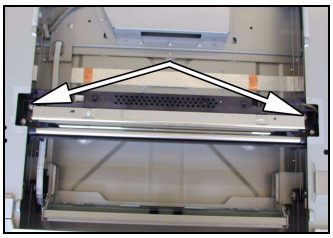

3. Remove two Scanner mounting screws (to which no red paint has been applied).

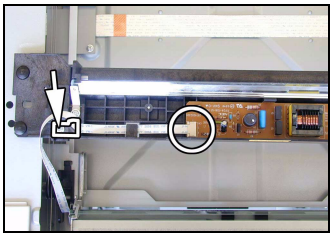

4. Remove one screw and the cable holder.
5. Remove the flat cable from the Inverter Board and then remove the Scanner.

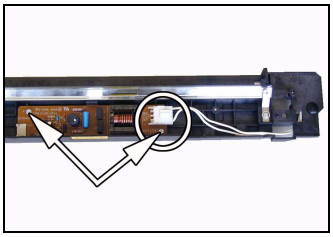

6. Unplug one connector from the Inverter Board.
7. Remove two screws and the Inverter Board.

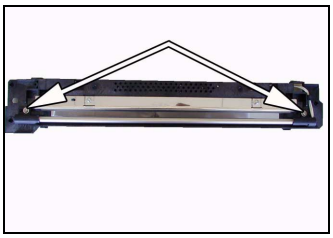

8. Remove two screws and the Exposure Lamp.

(8) Removal of the Scanner Drive Cables

1. Remove the control panel, Front Cover, Rear Cover, Left Cover, Right Cover, Original Glass, and ADF Glass.
2. Remove the Scanner.

NOTE

- Remove the two red painted screws to remove the Scanner in this step.

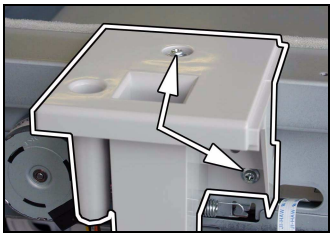

3. Remove two screws and the Exposure Lamp.

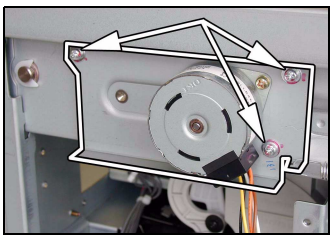

4. Loosen three screws to free the Scanner Motor Assy.

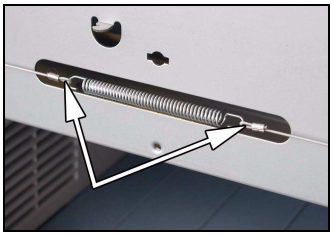

5. Unhook the spring from the cable hooks at the front and rear.

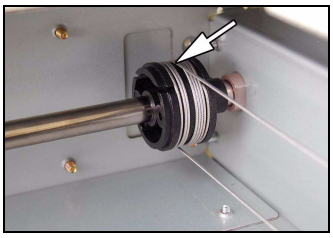

6. Remove the front cable from the cable pulley.

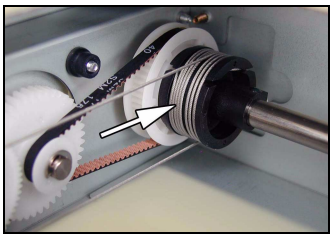

7. Remove the rear cable from the cable pulley.

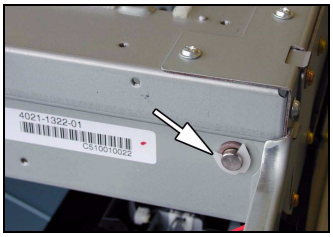

8. Snap off one C-ring from the front side of the pulley assy.

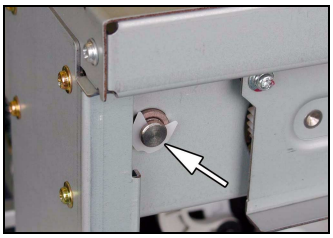

9. Snap off one C-ring from the rear side of the pulley assy.

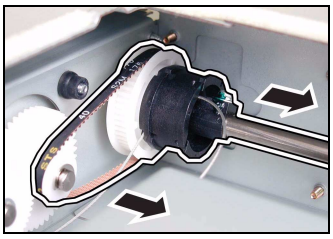

10. Remove the belt and the pulley assy.

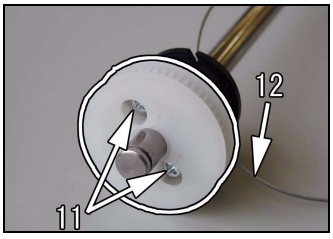

11. Remove two screws and the pulley.
12. Remove the rear cable.

(9) Winding of the Scanner Drive Cables

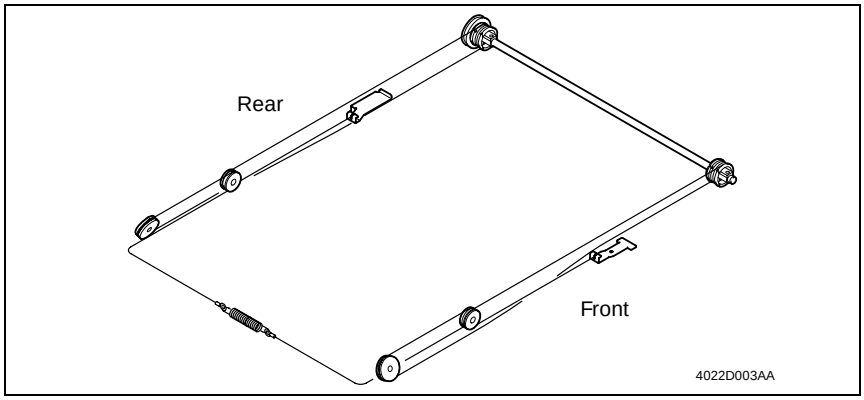

1. Wind the cable around the rear cable pulley of the pulley assy from side B toward side A and then secure the cable with tape.
2. Wind the cable around the front cable pulley of the pulley assy from side A toward side B and then secure the cable with tape.

NOTE
- *Make sure that no part of the cable rides on the other.*

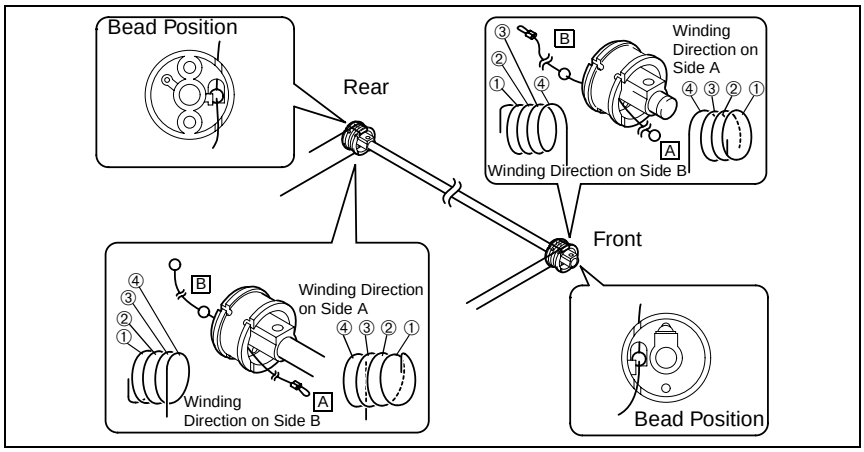

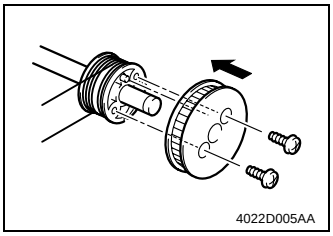

3. Secure the pulley to the rear cable pulley using two screws.

NOTE
- *Make sure that the pulley is doweled to the cable pulley.*

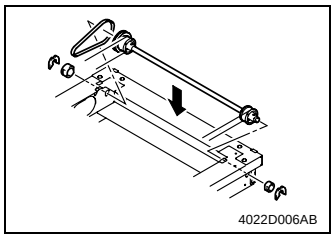

4. Mount the pulley assy using two C-rings.

5. Wind the cable at the front.
6. Hook the spring onto the cable hook and hook the spring onto the frame.

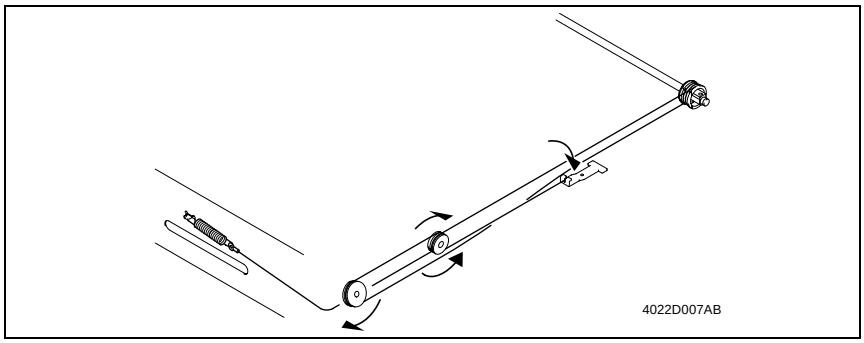

7. Wind the cable in the rear.
8. Secure the cables at the front and rear with a spring.

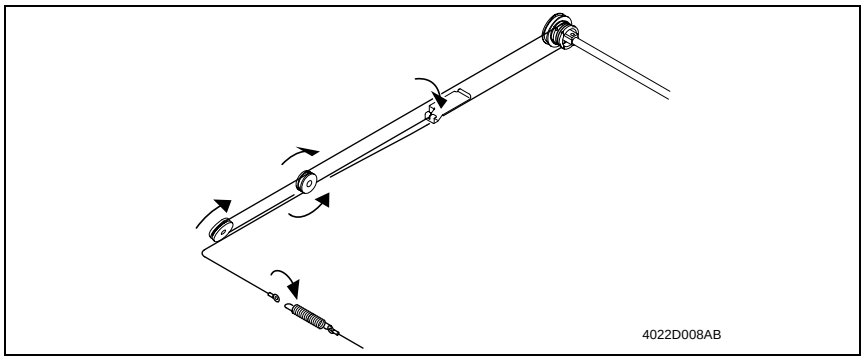

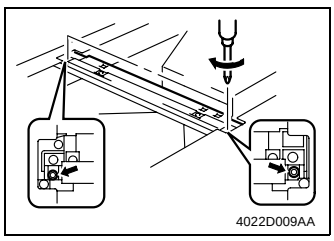

9. Temporarily secure the Scanner to the front and rear cables.
10. Perform the Focus-Positioning of the Scanner and 2nd/3rd Mirrors Carriage.

☞ D-64

3-6. PH

(1) Removal of the PH Unit

1. Remove the control panel, Front Cover, Rear Cover, Left Cover, and Upper Cover.
2. Remove the PWB Cover Assy.

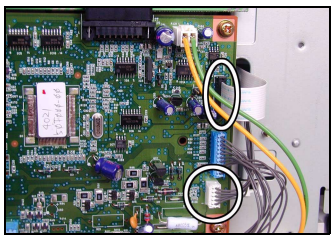

3. Remove one flexible harness and unplug one connector from the Master Board.



4. Remove the harness from one edge cover and one wiring saddle.

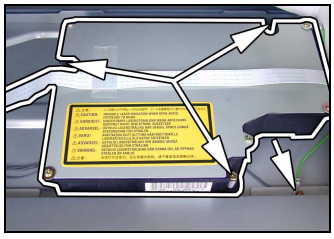

5. Remove one screw and the ground wire.

NOTE

- *To remove the ground wire, remove the screw installed on the copier side.*

6. Remove three screws and the PH Unit.

(2) Cleaning of the PH Window

1. Remove the Front Cover, Rear Cover, Left Cover, and Upper Cover.



2. Wipe the PH window clean of dirt using a soft cloth.

3-7. Imaging Unit (IU)

NOTE

- *When loading developer as part of the IU replacement procedure or when changing the developer, remove the Toner Bottle and run "ATDC Sensor Automatic Adjustment" (F8) twice to allow toner in the Spent Toner Recycling Duct and Toner Conveying Duct into the Developer Mixing Chamber before removing the IU.*

(1) Removal of the IU

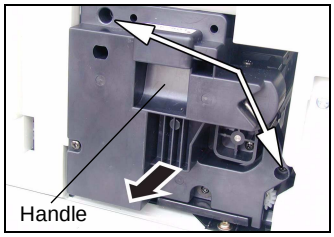

1. Open the Right Door.
2. Open the Front Door.
3. Remove two screws and, holding onto the handle of the IU, take off the IU.

NOTE

- *Before installing the IU, be sure to fully open the Right Door.*
  If the IU is installed with the Right Door left ajar, the PC Drum protective shutter will not open, interfering with the Image Transfer Roller gear, thus producing noise.
- *When inserting the IU, do that slowly and, when you are sure that the drum gear contacts its mating part, push the IU all the way into position. If this step is done all at once, the drum gear could be damaged.*

(2) Disassembly of the IU

<Separating the Cleaning Assy from Developing Assy>

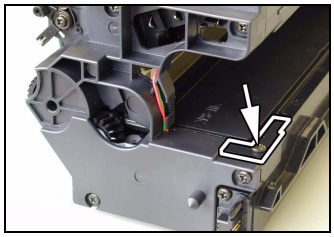

1. Remove one screw in the rear of the IU and remove the harness cover.

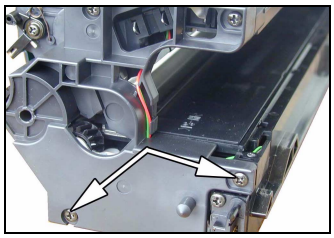

2. Remove two screws in the rear of the IU.

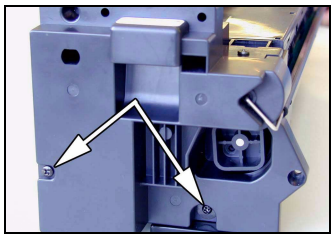

3. Remove two screws at the front of the IU.

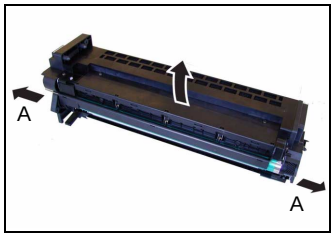

4. Widen flaps on both ends (marked with A in the illustration on the left) of the Cleaning Assy in the direction of arrow and turn to take off the Cleaning Assy.

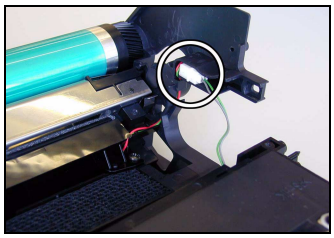

5. Unplug one connector of the Main Erase.

<Removal of the PC Drum>

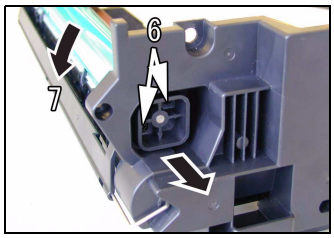

6. Remove two screws and the pivot shaft.
7. Remove the PC Drum.

NOTE

- *When the PC Drum has been replaced, apply a coat of toner to the surface of the PC Drum.*

☞ D-34

<Removal of the Ozone Filter>

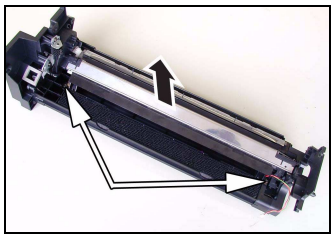

8. Remove two screws and the Main Erase.

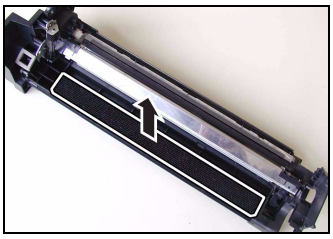

9. Remove the Ozone Filter.

<Removal of the PC Drum Charge Corona Assy>

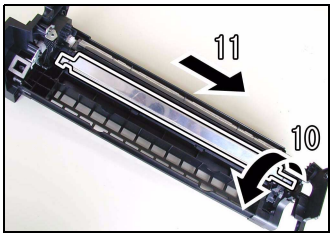

10. Turn the holder in the rear in the direction of the arrow to remove it from the side bracket.
11. Slide out the PC Drum Charge Corona in the direction of the arrow.

<Removal of the Charge Neutralizing Sheet and Cleaning Blade>

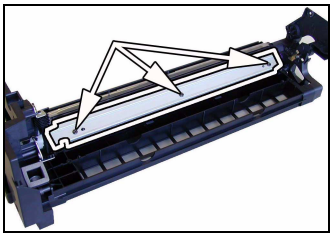

12. Remove three screws, the Charge Neutralizing Sheet, and Cleaning Blade.

NOTE

- *When securing the Cleaning Blade and Charge Neutralizing Sheet, tighten screws in the order of one on one edge, one at the center, and one on the other edge.*
- *When the Cleaning Blade has been replaced, apply a coat of toner to the surface of the PC Drum.*

☞ D-34

<Cleaning of the PC Drum Paper Separator Fingers>



13. Using a soft cloth dampened with alcohol, wipe the Paper Separator Fingers clean of dirt.

<Cleaning of the Ds Collars>

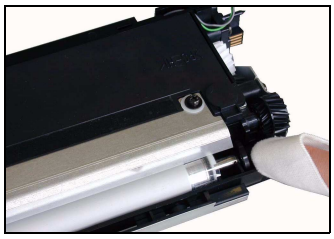

14. Using a soft cloth dampened with alcohol, wipe the Ds Collars clean of dirt.

<Cleaning of the Developer Scattering Prevention Plate>

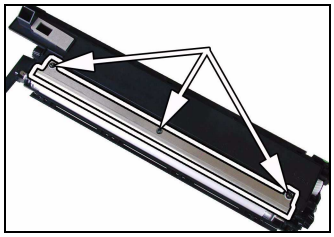

15. Remove three screws and the Developer Scattering Prevention Plate.

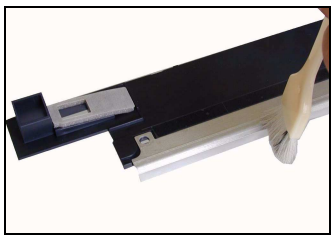

16. Using a brush, whisk dust and dirt off the surface of the Developer Scattering Prevention Plate.

<Replacement of the Developer>

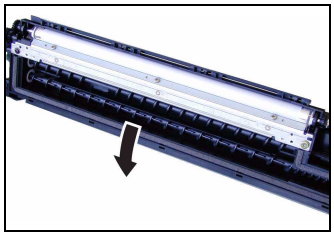

17. Dump the developer.

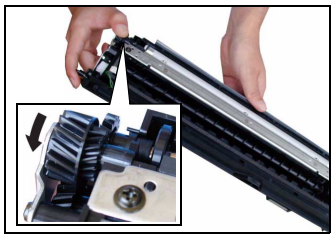

<<How to Dump Developer>>

- Dump developer on the Sleeve Roller by turning the gear in the direction of the arrow with the Developing Unit tilted as shown.
- Note at this time that turning the gear backward could damage the mylar for cleaning the ATDC Sensor.
- Dump developer until almost no developer sticks to the Sleeve Roller.



18. Pour one packet of developer.

NOTE
- *Shake the packet of developer well before pouring.*
- *When the developer has been replaced, run "ATDC Sensor Automatic Adjustment."*

☞ D-61

<Cleaning of the Pre-Image Transfer Guide Plate>



19. Using a soft cloth dampened with alcohol, wipe the Pre-Image Transfer Guide Plate clean of dirt.

(3) Application of Toner

NOTE
- *Perform these steps when the PC Drum and/or Cleaning Blade have been replaced.*

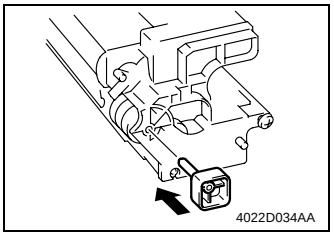

1. With the Cleaning Assy separated from the Developing Assy, install the PC Positioning Jig in the rear of the Developing Assy.

NOTE
- *Ready the PC Positioning Jig (Pivot Shaft) separately. (It can be ordered. For details, see the Parts Manual.)*

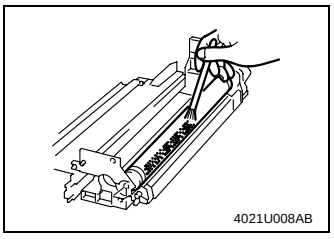

2. Using a brush, apply a light coat of toner to the surface of the PC Drum.

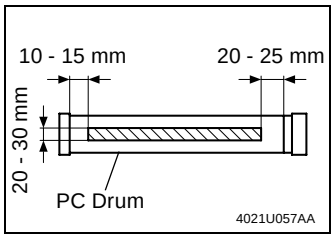

<<Area to which toner is to be applied>>

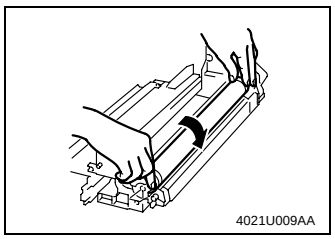

3. Hold both ends of the PC Drum with your both hands and turn the PC Drum a half turn in the direction of the arrow.

(4) Replacement of the ATDC Sensor

1. Divide the IU into the Cleaning Assy and Developing Assy.
2. Remove the Developer Scattering Prevention Plate and dump developer.

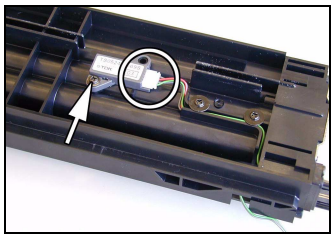

3. Unplug one connector, and remove one screw and the ATDC Sensor.

4. Install the ATDC Sensor.
5. Pour developer.
6. Reinstall the Developer Scattering Prevention Plate.
7. Mount the Cleaning Assy to the Developing Assy.
8. Install the IU in the copier and run F8 operation.
9. Enter the adjustment value on the Adjust Label.

3-8. IMAGE TRANSFER SECTION

(1) Removal of the Image Transfer Roller Assy

1. Open the Right Door.

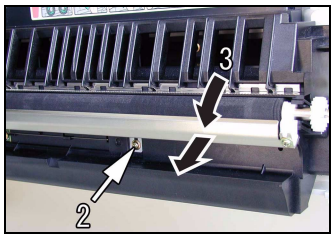

2. Loosen one fixing bracket mounting screw.
3. Turn to remove the Pre-Image Transfer Upper Guide Plate.

NOTE

- *When reinstalling the fixing bracket, make sure that the hook of the fixing bracket fits into the slot in the Pre-Image Transfer Upper Guide Plate.*

(2) Cleaning of the Pre-Image Transfer Lower Guide Plate

1. Open the Right Door.



2. Using a soft cloth dampened with alcohol, wipe the Pre-Image Transfer Lower Guide Plate clean of dirt.

(3) Cleaning of the Charge Neutralizing Plate

1. Open the Right Door.

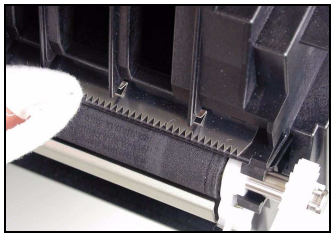

2. Using a soft cloth dampened with alcohol, wipe the Charge Neutralizing Plate clean of dirt.

NOTE

- *Use care not to allow the Image Transfer Roller to be touched with alcohol.*
- *Do not allow the soft cloth to be caught by the tip of the Charge Neutralizing Plate.*

3-9. FUSING SECTION

(1) Removal of the Fusing Unit

1. Remove the control panel.

NOTE

- *In this step, free the control panel without removing one flat cable and two ground wires and unplugging one connector.*

2. Remove the Front Cover, Rear Cover, and Rear Right Cover.

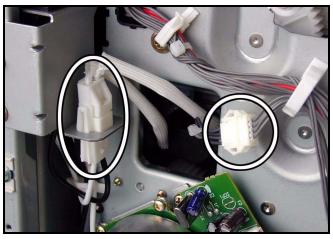

3. Unplug two connectors of the Fusing Unit.

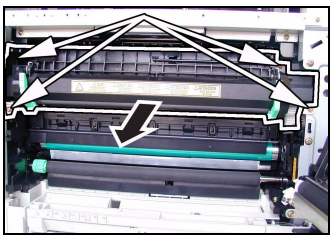

4. Open the Right Door.
5. Remove four screws and the Fusing Unit.

(2) Disassembly of the Fusing Unit

<Removal of the Thermoswitch>

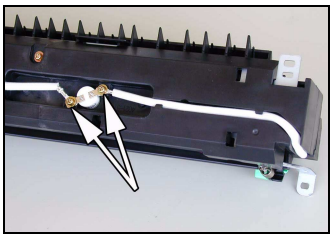

1. Remove two screws and the thermoswitch.

<Removal of the Right Fusing Roller>

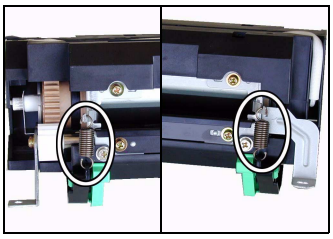

2. Unhook the pressure springs at the front and rear.

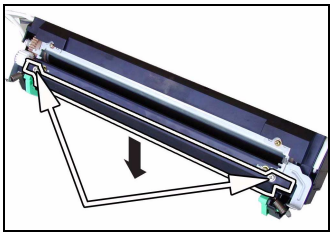

3. Remove two shoulder screws, two washers, and the Right Roller Assy.

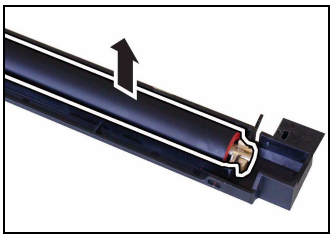

4. Remove the Right Roller.

<Removal of the Fusing Heater Lamp>

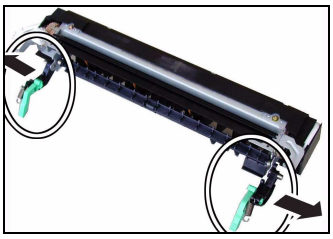

5. Remove the Pressure Lever Assemblies at the front and rear.

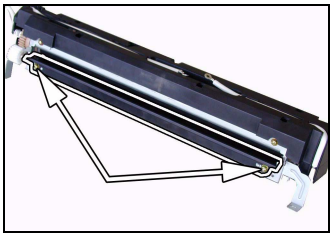

6. Remove two screws and the Fusing Entrance Guide Plate.

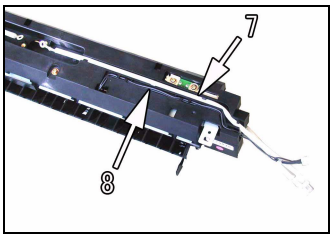

7. Remove the harness in the rear of the Heater Lamp from the cover.
8. Remove the thermistor harness from the cover.

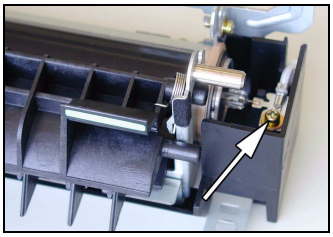

9. Remove one mounting screw from the front of the Heater Lamp.

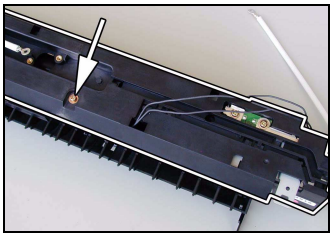

10. Remove one screw and the cover.

NOTE
- When reinstalling the cover, allow two tabs on the cover to be caught in the frame.

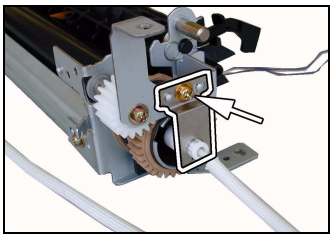

11. Remove one screw and the rear lamp holder.

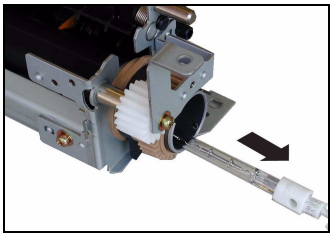

12. Remove the Fusing Heater Lamp.

<Left Fusing Roller>

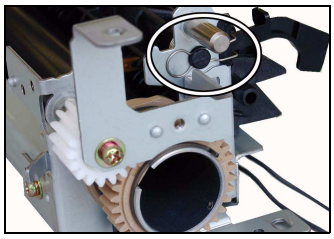

13. Snap off one retaining ring.

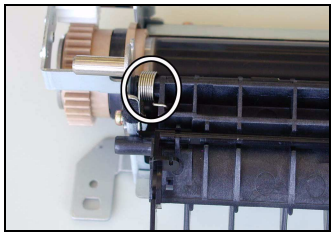

14. Unhook the spring in the rear of the Guide Assy.

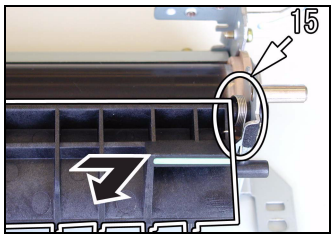

15. Unhook the spring at the front of the Guide Assy.
16. Remove the Guide Assy.

NOTE
- *When removing and reinstalling the Guide Assy, use care not to allow the sensor lever spring to be unhooked.*

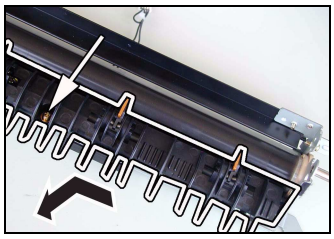

17. Remove one screw and the Paper Separator Finger Assy.

NOTE
- *When reinstalling the Paper Separator Finger Assy, allow six tabs to be caught in the frame.*

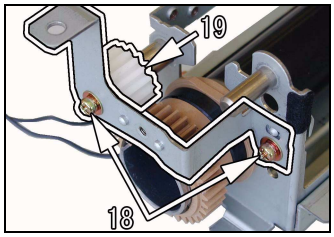

18. Remove two screws and the mounting bracket.
19. Remove the idle gear.

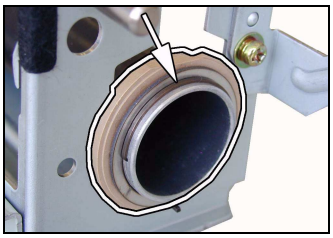

20. Snap off the retaining ring at the front of the Left Fusing Roller and remove the washer and bushing.

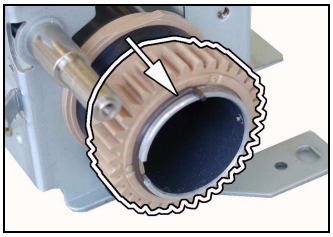

21. Snap off the retaining ring in the rear of the Left Fusing Roller and remove the gear.

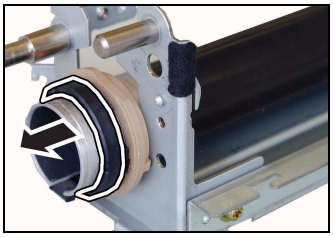

22. Remove the collar.

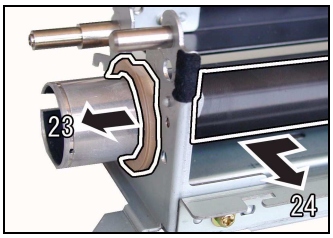

23. Remove the bushing.
24. Remove the Left Fusing Roller.

<Thermistor>

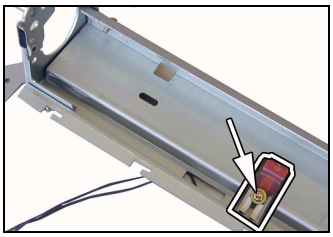

25. Remove one screw and the Thermistor.

3-10. MULTIPLE BYPASS (MB-5): OPTION

(1) Removal of the Separator Roll Assy

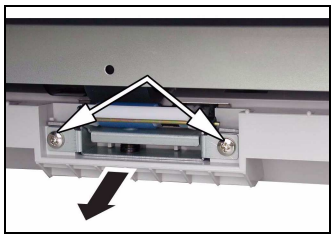

1. Open the Right Door.
2. Remove two screws and the Separator Roll Assy.

(2) Removal of the Paper Take-Up Roll

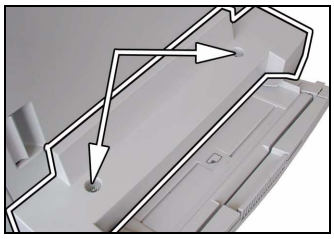

1. Remove two screws and the cover.

2. Remove the harness from one cord clamp.

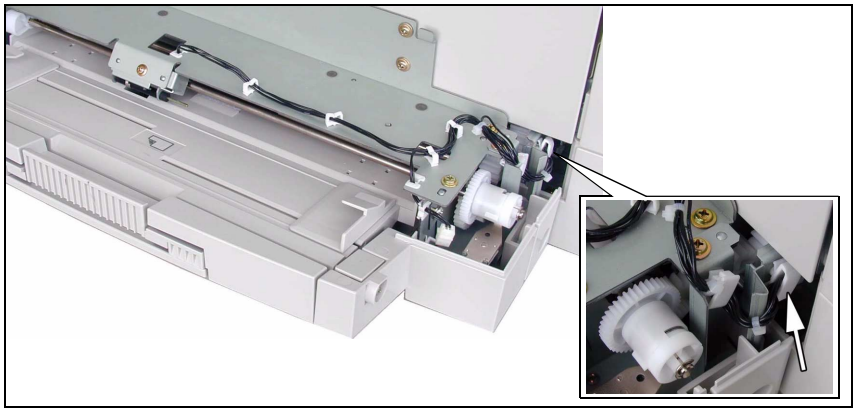



3. Remove two screws and the Bypass Transport Roller Assy.

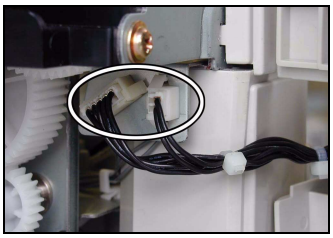

4. Unplug two connectors.

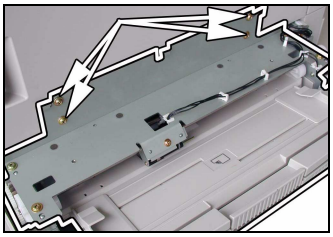

5. Remove four screws and the Multiple Bypass.

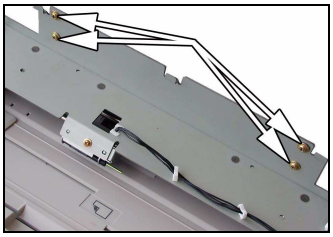

<<Multiple Bypass Installation Procedure>>

① Temporarily secure the Multiple Bypass using four screws.

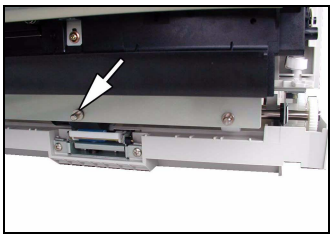

② Install the positioning pin at the location shown in the illustration.
(Use the positioning pin furnished as an accessory with the Multiple Bypass.)

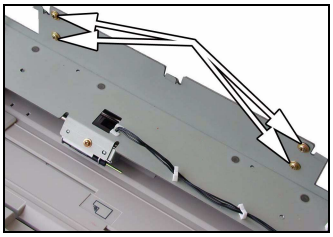

③ Close the Right Door and correctly position the Multiple Bypass using the positioning pin.

④ Tighten the four Multiple Bypass mounting screws to specified torque.

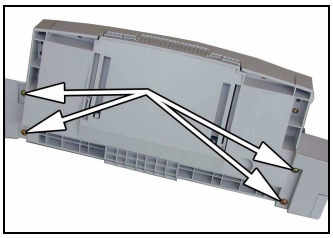

6. Remove four screws and the Paper Take-Up Assy.

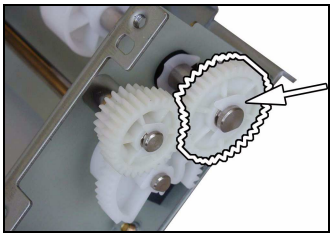

7. Snap off one C-ring and remove the gear.

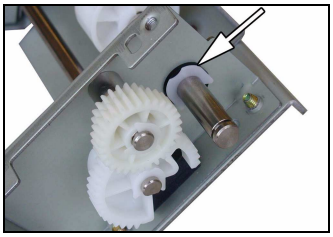

8. Snap off one C-ring.

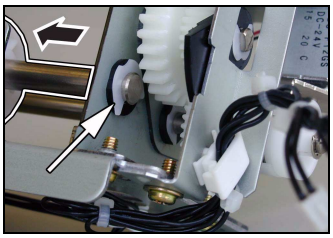

9. Snap off one C-ring and remove the Paper Take-Up Roll Assy.

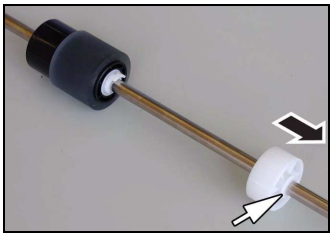

10. Snap off one C-ring and remove the roll.

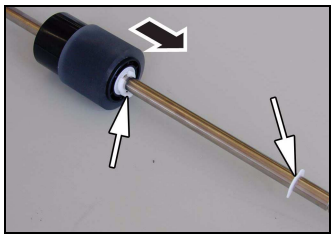

11. Snap off one C-ring and one C-clip and remove the paper Take-Up Roll.

(3) Cleaning of the Separator Roll/Paper Take-Up Roll

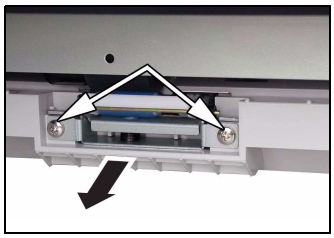

1. Open the Right Door.
2. Remove two screws and the Separator Roll Assy.

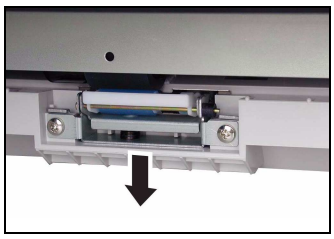

NOTE

- *When attempting to reinstall the Separator Roll Assy, try to move the assy in the direction of the arrow.*

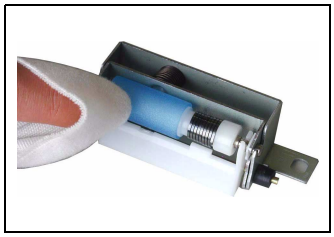

3. Using a soft cloth dampened with alcohol, wipe the Separator Roll clean of dirt.

(4) Cleaning of the Paper Take-Up Roll



1. Open the Right Door.
2. Remove the Separator Roll Assy.
3. Using a soft cloth dampened with alcohol, wipe the Paper Take-Up Roll clean of dirt.

3-11. JOB TRAY (JS-202): OPTION

(1) Removal of the Main Board

1. Remove the control panel, Front Cover, Rear Cover, Right Cover, and Right Inside Cover.

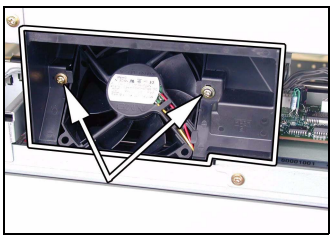

2. Remove two screws and the fan cover.

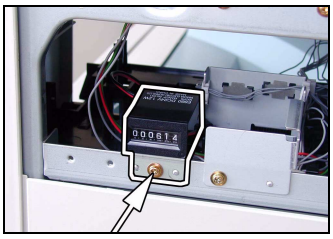

3. Remove one screw and the Mechanical Counter (if the copier is so equipped).

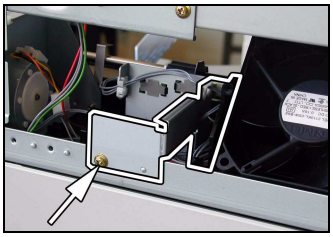

4. Remove one Sensor Assy mounting screw.

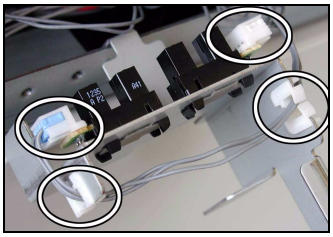

5. Unplug two connectors.
6. Remove the harness from two edge covers and remove the Sensor Assy.

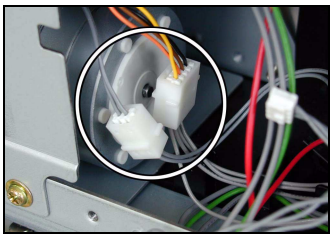

7. Unplug two connectors.

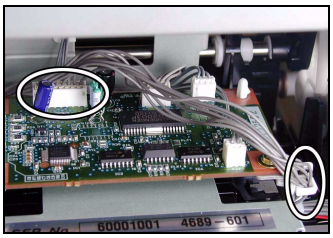

8. Unplug one connector and remove the harness from one edge cover.

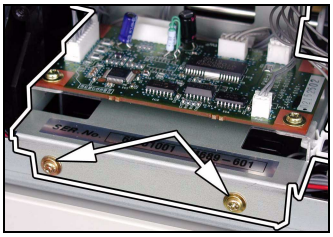

9. Remove two screws and the PWB Assy.

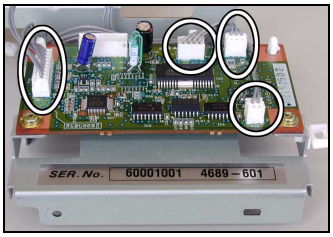

10. Unplug four connectors.

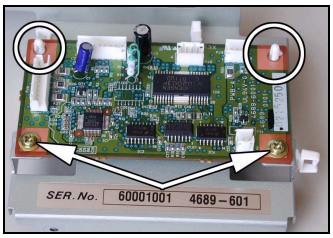

11. Remove two screws, two PWB Supports, and the Main Board.

(2) Paper Detecting Board

1. Remove the control panel, Rear Cover, and Right Cover.

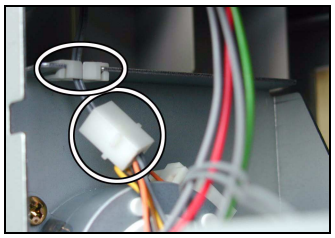

2. Unplug one harness connector and remove the harness from one edge cover.

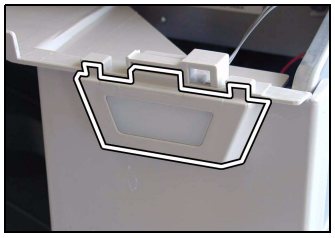

3. Press the tabs to remove the Paper Detecting Board Assy from the Front Cover.

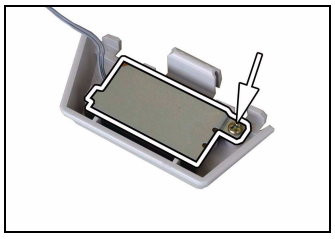

4. Remove one screw and the Paper Detecting Board.

3-12. SHIFTING UNIT (OT-103): OPTION

(1) Removal of the Main Board

1. Remove the control panel, Front Cover, Rear Cover, Right Cover, and Right Inside Cover.

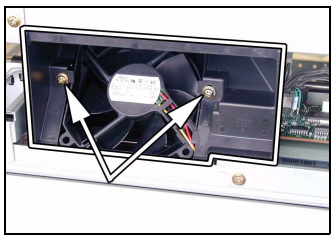

2. Remove two screws and the fan cover.

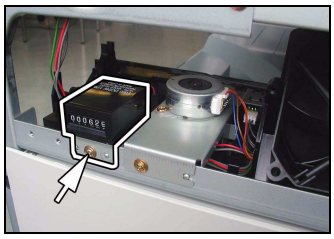

3. Remove one screw and the Mechanical Counter (if the copier is so equipped).

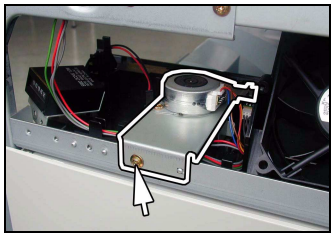

4. Remove one screw and the Motor Assy.

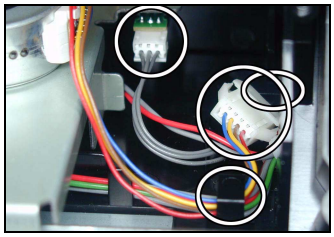

5. Unplug two connectors and remove the harness from the guide.

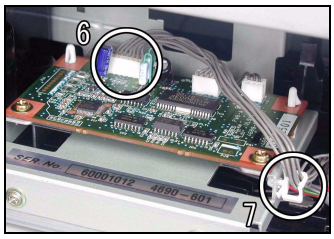

6. Unplug one connector from the Main Board.
7. Remove the harness from one edge cover.

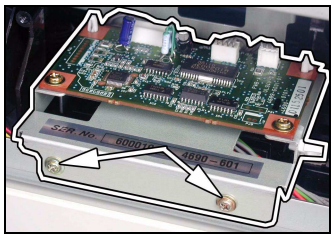

8. Remove two screws and the Main Board Assy.

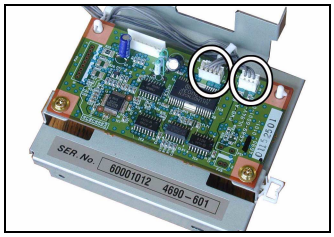

9. Unplug two connectors.

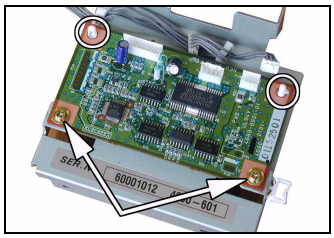

10. Remove two screws, two PWB Supports, and the Main Board.

4. ADJUSTMENT

4-1. ADJUSTMENT JIGS AND TOOLS USED

<Scanner/Mirrors Carriage Positioning Jigs>

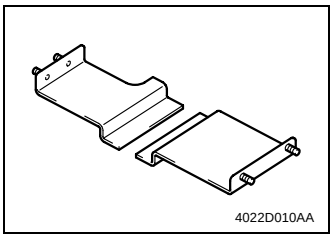

<Ds Collar Positioning Jigs>

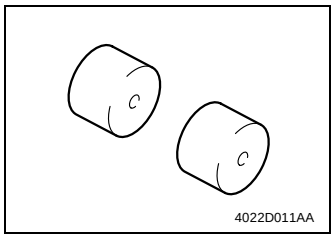

<Db Gap Adjusting Jigs>

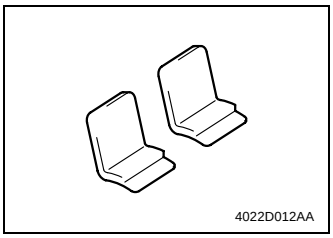

<PC Positioning Jig>

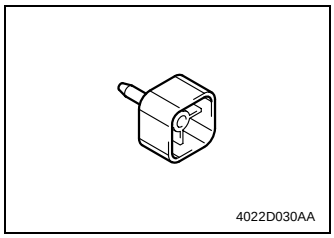

4-2. TIMING BELT TENSION ADJUSTMENT

<Scanner Motor Timing Belt Adjustment>

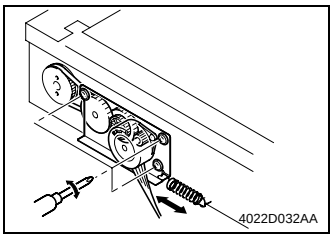

1. Loosen three screws and move the Scanner Motor Assy to the right or left to give tension to the spring.

NOTE

- *Give tension to the spring with the pulley in correct mesh with the timing belt.*

2. Using a torque driver, tighten the screws to a torque of 2 kg·cm.

4-3. ACCESSING THE FUNCTION, TECH. REP. CHOICE, AND ADJUST MODE

(1) Function Mode

1. Press the Meter Count key.
2. Press the following keys in this order: Stop → 0 → 0 → Stop → 0 → 1.
3. Enter the code number “1” from the 10-Key Pad.
4. Press the Start key.

(2) Tech. Rep. Choice Mode

1. Press the Meter Count key.
2. Press the following keys in this order: Stop → 0 → 0 → Stop → 0 → 1.
3. Enter the code number “2” from the 10-Key Pad.
4. Press the Start key.

(3) Adjust Mode

1. Press the Meter Count key.
2. Press the following keys in this order: Stop → 0 → 0 → Stop → 0 → 1.
3. Press the Stop key and then the Start key.

4-4. ELECTRICAL/IMAGE ADJUSTMENT

(1) Edge Erase Adjustment (Leading, Trailing, and Top/Bottom Edges)

Requirement

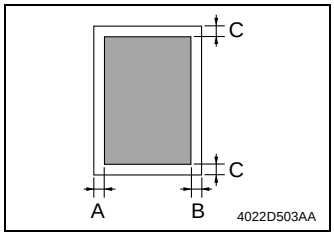

- Adjust the erase width on the leading edge (width A), trailing edge (width B), and the top/bottom edge (width C).

✻ Default Setting: 4 mm

Mode	Code No.	Setting Range
Tech. Rep. Choice	5 (leading edge)	0 to 5, 1 step: 1 mm
	6 (trailing edge)	
	7 (top/bottom)	

NOTE

- *This adjustment is made when a request is made from the user to reduce the corresponding erase width.*

<Adjustment Procedure>

1. Enter the Tech. Rep. Choice mode.
2. With “c--” shown on the Display, enter the code number “5” from the 10-Key Pad and press the Start key to enter the “Leading Edge Erase Adjustment” mode.
3. Press the Clear key to clear the current setting value.
4. Enter the setting value from the 10-Key Pad and press the Start key to validate the entry.

Adjustment Instructions

To make the edge erase width smaller, decrease the setting value.
To make the edge erase width greater, increase the setting value.

5. Following the same procedure, set the erase width on the trailing edge and top/bottom edge.

(2) Loop Length Adjustment (1st and 2nd Trays, Bypass Tray)

Requirement
- Adjust so that a loop of an adequate length is formed in the paper before the Synchronizing Roller as the paper is being fed through the copier.

Mode	Code No.	Setting Range
Tech. Rep. Choice	8 (1st Tray)	0 to 14, 1 step: Approx. 0.5 mm
	9 (2nd - 5th Tray)	
	10 (Bypass Tray)	

NOTE
- *This adjustment is made when the amount of leading edge void varies, or when paper skews, is folded, or is misfed.*

<Adjustment Procedure>
1. Enter the Tech. Rep. Choice mode.
2. With “c--” shown on the Display, enter the code number “8” from the 10-Key Pad and press the Start key to enter the “Loop Length Adjustment (1st Tray)” mode.
3. Press the Clear key to clear the current setting value.
4. Enter the setting value from the 10-Key Pad and press the Start key to validate the entry.

Adjustment Instructions
- *Adjust by changing the setting value until the problems of variations in the amount of leading edge void, paper skew, folded paper, and paper misfeed are eliminated.*

5. Following the same procedure, adjust the loop length for the 2nd Tray and Bypass Tray.

(3) Printer CD Registration Adjustment

Requirement

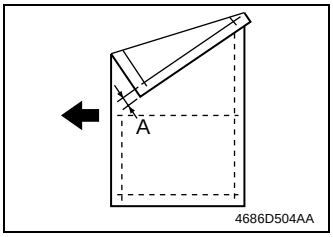

- Adjust so that width A on the test print produced falls within the specified range.

Specifications	Mode	Code No.	Setting Range
A4C: 20 ± 2.0 mm; 8-1/2 × 11C: 11.2 ± 2.0 mm	Adjust	1	60 to 140, 1 step: 0.1 mm

NOTES
- *This adjustment is made when the PH Unit has been replaced.*
- *Load the 1st Tray with A4C or 8-1/2 × 11C paper.*

<Adjustment Procedure>
1. Enter the Adjust mode.
2. With “AJ-” shown on the Display, enter the code number “12” from the 10-Key Pad.
3. Press the Paper key to select the 1st Tray.
4. Press the Start key.

✻ Then, a test print will be produced.

5. Check to see if width A on the test print falls within the specified range.
   If width A falls outside the specified range, perform the following steps to make an adjustment.
6. With “AJ-” shown on the Display, enter the code number “1” from the 10-Key Pad and press the Start key to enter the “Printer CD Registration Adjustment” mode.
7. Press the Clear key to clear the current setting value.
8. Enter the new setting value from the 10-Key Pad and press the Start key to validate the entry.

Adjustment Instructions
If width A on the test print is longer than the specifications, increase the setting value.
If width A on the test print is shorter than the specifications, decrease the setting value.
If a single adjustment procedure does not successfully bring width A into the specified range, repeat steps 5 though 7.

(4) Printer FD Registration Adjustment

Requirement

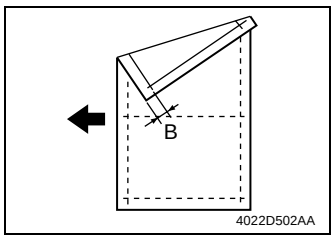

- Adjust so that width B on the test print produced falls within the specified range.

Specifications	Mode	Code No.	Setting Range
10 ± 1.5 mm	Adjust	2	67 to 133, 1 step: Approx. 0.19 mm

NOTES
- *This adjustment is made when the PH Unit has been replaced.*
- *Load the 1st Tray with A4C or 8-1/2 × 11C paper.*

<Adjustment Procedure>
1. Enter the Adjust mode.
2. With “AJ-” shown on the Display, enter the code number “12” from the 10-Key Pad.
3. Press the Paper key to select the 1st Tray.
4. Press the Start key.

✻ Then, a test print will be produced.

5. Check to see if width B on the test print falls within the specified range.
   If width B falls outside the specified range, perform the following steps to make an adjustment.
6. With “AJ-” shown on the Display, enter the code number “2” from the 10-Key Pad and press the Start key to enter the “Printer FD Registration Adjustment” mode.
7. Press the Clear key to clear the current setting value.
8. Enter the new setting value from the 10-Key Pad and press the Start key to validate the entry.

Adjustment Instructions
If width B on the test print is longer than the specifications, decrease the setting value.
If width B on the test print is shorter than the specifications, increase the setting value.
If a single adjustment procedure does not successfully bring width B into the specified range, repeat steps 5 though 7.

(5) Scanner CD Registration Adjustment

Requirement

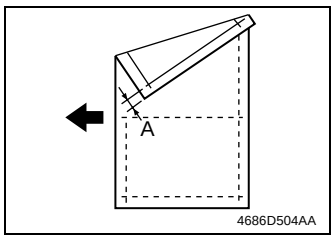

- Adjust so that the deviation between width A on the test print and that on the copy falls within the specified range.

Specifications	Mode	Code No.	Setting Range
0 ± 2.0 mm	Adjust	5	20 to 180, 1 step: 0.1 mm

NOTES
- *This adjustment is made when the PH Unit has been replaced and after "Printer Registration Adjustments (CD and FD)" and "Scanner Zoom Adjustment (CD)."*
- *This adjustment is made when the CCD Unit has been replaced and after "CCD Unit Position Adjustment."*
- *Load the 1st Tray with A4C or 8-1/2 × 11C paper.*

<Adjustment Procedure>
1. Enter the Adjust mode.
2. With "AJ-" shown on the Display, enter the code number "12" from the 10-Key Pad.
3. Press the Paper key to select the 1st Tray.
4. Press the Start key.

✻ Then, a test print will be produced.

5. Place the test print produced on the Original Glass and make a copy of it.
6. Align the test print (original) with the copy and check for deviation.
   If the deviation between width A on the test print and that on the copy falls outside the specified range, perform the following steps to make an adjustment.
7. With "AJ-" shown on the Display, enter the code number "5" from the 10-Key Pad and press the Start key to enter the "Scanner CD Registration Adjustment" mode.
8. Press the Clear key to clear the current setting value.
9. Enter the new setting value from the 10-Key Pad and press the Start key.

Adjustment Instructions
If with A of the copy is longer than that on the test print, decrease the setting value.
If with A of the copy is shorter than that on the test print, increase the setting value.
If a single adjustment procedure does not successfully bring the deviation into the specified range, repeat steps 6 though 8.

(6) Scanner FD Registration Adjustment

Requirement

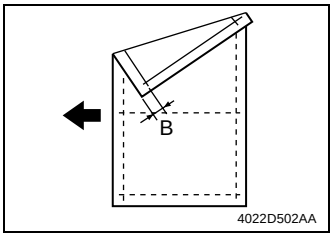

- Adjust so that the deviation between width B on the test print and that on the copy falls within the specified range.

Specifications	Mode	Code No.	Setting Range
0 ± 1.5 mm	Adjust	6	60 to 140, 1 step: 0.1 mm

NOTES
- *This adjustment is made when the PH Unit has been replaced and after "Printer Registration Adjustments (CD and FD)" and "Scanner Zoom Adjustment (CD)."*
- *This adjustment is made when the CCD Unit has been replaced and after "CCD Unit Position Adjustment."*
- *Load the 1st Tray with A4C or 8-1/2 × 11C paper.*

<Adjustment Procedure>
1. Enter the Adjust mode.
2. With "AJ-" shown on the Display, enter the code number "12" from the 10-Key Pad.
3. Press the Paper key to select the 1st Tray.
4. Press the Start key.

✻ Then, a test print will be produced.

5. Place the test print produced on the Original Glass and make a copy of it.
6. Align the test print (original) with the copy and check for deviation.
   If the deviation between width B on the test print and that on the copy falls outside the specified range, perform the following steps to make an adjustment.
7. With "AJ-" shown on the Display, enter the code number "5" from the 10-Key Pad and press the Start key to enter the 2Scanner CD Registration Adjustment" mode.
8. Press the Clear key to clear the current setting value.
9. Enter the new setting value from the 10-Key Pad and press the Start key.

Adjustment Instructions
If with B of the copy is longer than that on the test print, increase the setting value.
If with B of the copy is shorter than that on the test print, decrease the setting value.
If a single adjustment procedure does not successfully bring the deviation into the specified range, repeat steps 6 though 8.

(7) Scanner CD Zoom Adjustment

Requirement
- Adjust so that the amount of error falls within ±1.0 % of the length to be measured.
- Adjust so that the following specifications are met when the length of the scale is 200 mm.

Zoom Ratio	Specifications	Mode	Code No.	Setting Range
Full size (×1.00)	200 ± 2.0 mm	Adjust	3	97 to 103, 1 step: 0.4 %

NOTE
- *This adjustment is made when the CCD Unit has been replaced and for fine-adjustment after "CCD Unit Position Adjustment."*

<Adjustment Procedure>
1. Place a scale on the Original Glass in parallel with the Original Width Scale and make a copy.

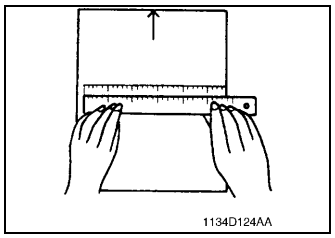

2. Measure the length of the scale on the copy.
   If the amount of error falls outside the specified range, perform the following steps to make an adjustment.
3. Enter the Adjust mode.
4. With "AJ-" shown on the Display, enter the code number "3" from the 10-Key Pad and press the Start key to enter the "Scanner CD Zoom Adjustment" mode.
5. Press the Clear key to clear the current setting value.
6. Enter the new setting value from the 10-Key Pad and press the Start key to validate the entry.

Adjustment Instructions
If the length on the copy is longer than the actual one, decrease the setting value.
If the length on the copy is shorter than the actual one, increase the setting value.
If a single adjustment procedure does not successfully bring the amount of error into the specified range, repeat steps 3 though 6.

(8) Scanner FD Zoom Adjustment

Requirement
- Adjust so that the amount of error falls within ±1.0 % of the length to be measured.
- Adjust so that the following specifications are met when the length of the scale is 300 mm.

Zoom Ratio	Specifications	Mode	Code No.	Setting Range
Full size (×1.00)	300 ± 3.0 mm	Adjust	4	97 to 103, 1 step: 0.4 %

NOTE
- *This adjustment is made when the Scanner Drive Cables have been replaced.*

<Adjustment Procedure>
1. Place a scale on the Original Glass in parallel with the Original Length Scale and make a copy.

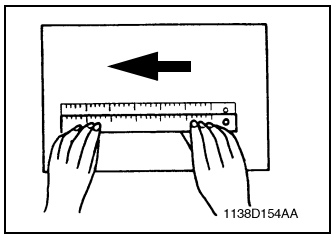

2. Measure the length of the scale on the copy.
   If the amount of error falls outside the specified range, perform the following steps to make an adjustment.
3. Enter the Adjust mode.
4. With “AJ-” shown on the Display, enter the code number “4” from the 10-Key Pad and press the Start key to enter the “Scanner FD Zoom Adjustment” mode.
5. Press the Clear key to clear the current setting value.
6. Enter the new setting value from the 10-Key Pad and press the Start key to validate the entry.

Adjustment Instructions
If the length on the copy is longer than the actual one, decrease the setting value.
If the length on the copy is shorter than the actual one, increase the setting value.
If a single adjustment procedure does not successfully bring the amount of error into the specified range, repeat steps 3 though 6.

(9) ATDC Sensor Automatic Adjustment (F8)

NOTES
- *This adjustment is made when the developer has been replaced.*
- *Make this adjustment with the Toner Bottle removed from the copier.*

<Adjustment Procedure>
1. Enter the Function mode.
2. With “F-” shown on the Display, enter the code number “8” from the 10-Key Pad to set the copier into the “ATDC Sensor Automatic Adjustment” mode.
3. Press the Start key.

✻ This automatically runs the “ATDC Sensor Automatic Adjustment” sequence for about three minutes.

4. After the F8 operation has been completed, check the adjustment value and enter it on the Adjust Label.

(10) Manual Bypass Registration Adjustment

Requirement

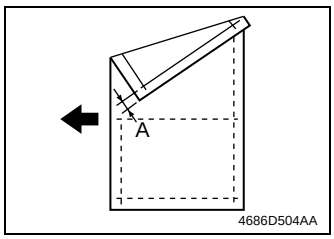

- Adjust so that the deviation between width A on the test print and that on the copy falls within the specified range.

✻ Specifications: 0 ± 2.0 mm

NOTES

- *This adjustment is made when the PH Unit has been replaced and after "Printer Registration Adjustments (CD and FD)" and "Scanner Zoom Adjustment (CD)."*
- *This adjustment is made when the CCD Unit has been replaced and after "CCD Unit Position Adjustment."*
- *Load the 1st Tray with A4C paper.*

<Adjustment Procedure>

1. Enter the Adjust mode.
2. With "AJ-" shown on the Display, enter the code number "12" from the 10-Key Pad.
3. Press the Paper key to select the 1st Tray.
4. Press the Start key.

✻ Then, a test print will be produced.

5. Place the test print produced on the Original Glass and make a copy using the Manual Bypass Tray.
6. Align the test print (original) with the copy and check for deviation.
   If the deviation between width A on the test print and that on the copy falls outside the specified range, adjust the position of the Guide Plate Unit.

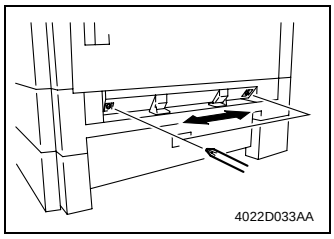

Adjustment Instructions
If with A of the copy is longer than that on the test print, move the Guide Plate Unit to the rear.
If with A of the copy is shorter than that on the test print, move the Guide Plate Unit to the front.

(11) Multiple Bypass Registration Adjustment (MB-5): Option

Requirement

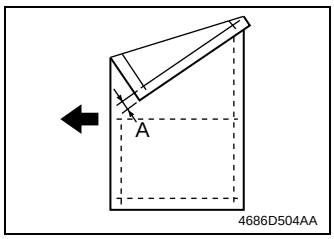

- Adjust so that the deviation between width A on the test print and that on the copy falls within the specified range.

✻ Specifications: 0 ± 2.0 mm

NOTES

- *This adjustment is made when the Multiple Bypass has been removed.*
- *This adjustment is made when the PH Unit has been replaced and after "Printer Registration Adjustments (CD and FD)" and "Scanner Zoom Adjustment (CD)."*
- *This adjustment is made when the CCD Unit has been replaced and after "CCD Unit Position Adjustment."*
- *Load the 1st Tray with A4C paper.*

<Adjustment Procedure>

1. Enter the Adjust mode.
2. With "AJ-" shown on the Display, enter the code number "12" from the 10-Key Pad.
3. Press the Paper key to select the 1st Tray.
4. Press the Start key.

✻ Then, a test print will be produced.

5. Place the test print produced on the Original Glass and make a copy using the Multiple Bypass Tray.
6. Align the test print (original) with the copy and check for deviation.
   If the deviation between width A on the test print and that on the copy falls outside the specified range, adjust the position of the Guide Plate Unit.

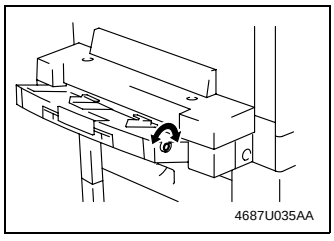

Adjustment Instructions
If with A of the copy is longer than that on the test print, turn the adjusting screw counterclockwise.
If with A of the copy is shorter than that on the test print, turn the adjusting screw clockwise.

4-5. OTHER ADJUSTMENTS

(1) Adjustment of the Position of the Scanner and 2nd/3rd Mirrors Carriage

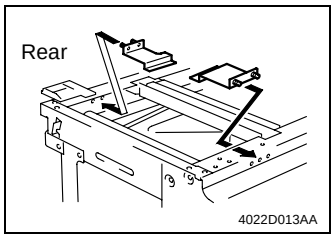

1. Fit the Scanner/Mirrors Carriage Positioning Jigs in the space between the Scanner and the 2nd/ 3rd Mirrors Carriage.

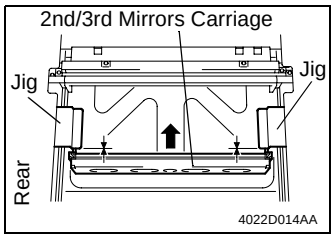

2. Press the 2nd/3rd Mirrors Carriage tightly up against the jigs.

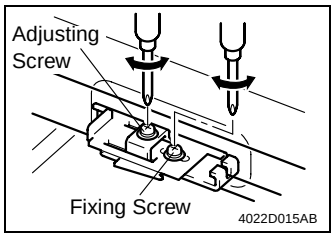

3. Loosen the set screw of the cable holding plate and turn the adjusting screw as necessary to eliminate clearance between the 2nd/3rd Mirrors Carriage and the Scanner/Mirrors Carriage Positioning Jigs.

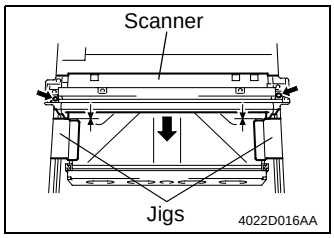

4. Press the Scanner tightly up against the jigs and tighten the set screw of the cable holding plate to the specified torque.

(2) CCD Unit Position Adjustment

NOTE
- *This adjustment is made when the CCD Unit has been replaced.*

<Adjustment Procedure>

1. Place a scale on the Original Glass in parallel with the Original Width Scale and make a copy.

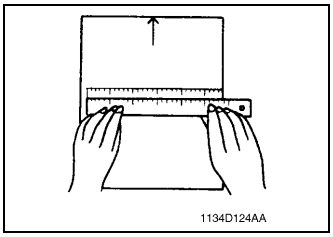

2. Measure the length of the scale on the copy.

Requirement
- In compliance with “Scanner CD Zoom Adjustment.”

☞ D-59

✻ If the measured value falls outside the specified range, perform the following step to make an adjustment.

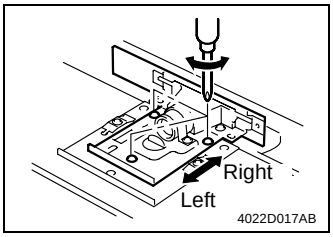

3. Loosen three CCD Unit mounting screws, slide the CCD Unit to the right or left, and secure it in position.

Adjustment Instructions
If the length on the copy is longer than the actual one, move the CCD Unit to the right.
If the length on the copy is shorter than the actual one, move the CCD Unit to the left.
If a single adjustment procedure does not successfully bring the amount of error into the specified range, repeat the steps.

(3) Adjustment of the Gap between the Doctor Blade and Sleeve Roller (Db Adjustment)

Requirement
- The gap between the Doctor Blade and the Sleeve Roller should be 0.39 ± 0.04 mm (as set using the jigs).

<Adjustment Procedure>
1. Remove the IU.
2. Separate the Cleaning Assy from the Developing Assy.
3. Remove the PC Drum, Main Erase, PC Drum Charge Corona Assy, and Ozone Filter.

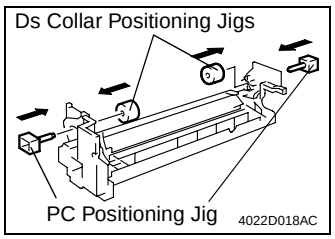

4. Install the Ds Collar Positioning Jigs.

NOTE
- *Ready a PC Positioning Jig (Pivot Shaft) separately. (It can be ordered. For details, see the Parts Manual.)*

5. Remove three screws and the Developer Scattering Prevention Plate.

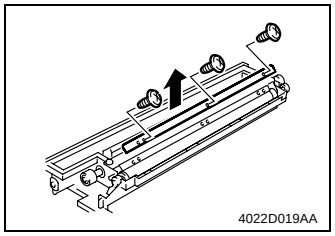

6. Remove three screws and the Doctor Blade.

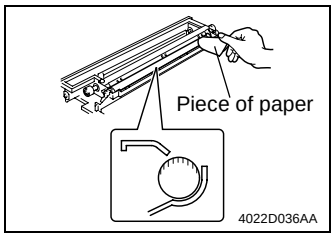

7. Using a small piece of paper, remove developer from the shaded area on the surface of the Sleeve Roller and put it in the Developer Mixing Chamber.
8. Vacuum the developer left on the Sleeve Roller.

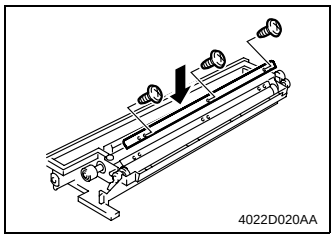

9. Temporarily secure the Doctor Blade using three new screws.

NOTE
- *Whenever a Db adjustment is made, use new screws (to which lock paint has been applied).*

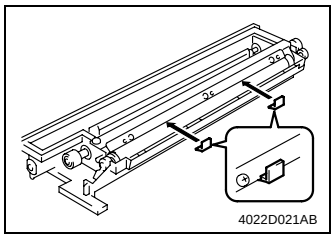

10. Install the Db Gap Adjusting Jigs in a space between the Sleeve Roller and Doctor Blade.

11. Put the Developing Assy and Cleaning Assy together.

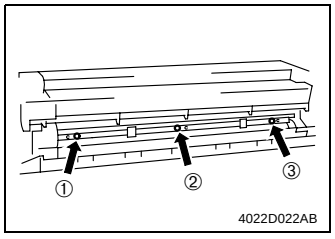

12. Press the Doctor Blade tightly up against the Db Gap Adjusting Jigs and, keeping that position, tighten the screws in the order of ① at the front, ② at the center, and ③ in the rear.

NOTE

- *The Doctor Blade mounting screws have been coated with lock paint and the job must be completed within 30 min. It the job extends more than that time, change the screws for new ones.*

4-6. MISCELLANEOUS

(1) Remounting the EEPROM (U29)

NOTE

- *When the Control Board (PWB-C) is replaced with a new one, EEPROM (U29) must be demounted from the old PWB-C and remounted on the new PWB-C.*

Remove the EEPROM (U29) from the new Control Board and mount the EEPROM (U29) of the old Control Board to the new Control Board.

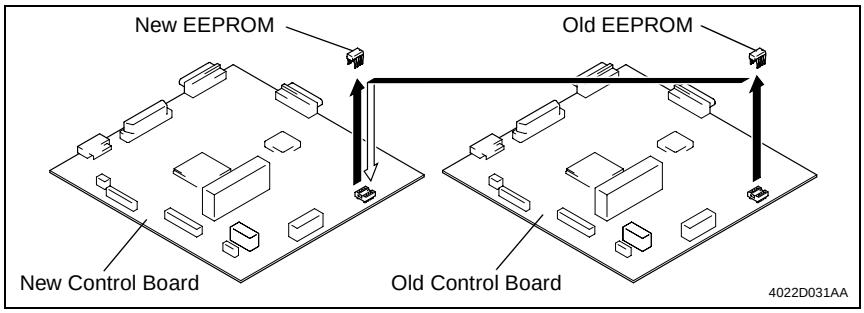

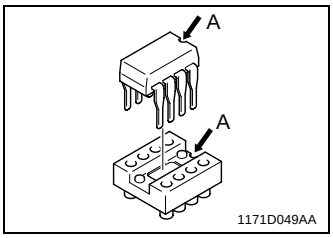

NOTE

- *Note the alignment notch marked with A on the EEPROM (U29) when mounting the IC.*

(2) Installation of the Plug-In Counter Socket (Option)

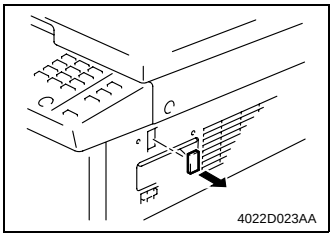

1. Cut out the knockout from the Right Cover.

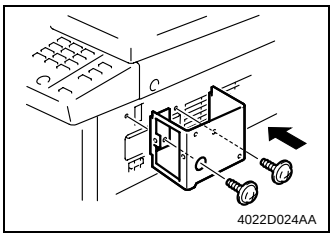

2. Using two screws, secure the counter mounting bracket.

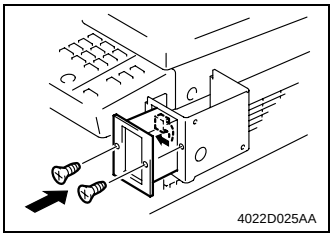

3. Connect the Plug-In Counter Socket connector.
4. Using two screws, secure the counter socket.

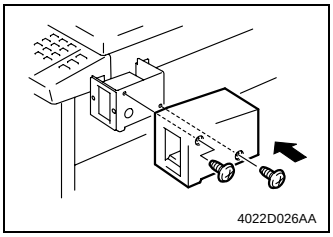

5. Using two screws, secure the Plug-In Counter cover.

NOTE

- *When the Plug-In Counter Socket is mounted, set "Plug-In Counter" of the Security mode to "1." (For details, see SWITCHES ON PWBs/TECH. REP. SETTINGS.)*

(3) Installation of the Mechanical Counter (Option)

1. Remove the control panel, Front Cover, Rear Cover, and Right Cover.

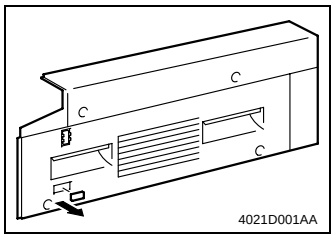

2. Cut out the knockout from the Right Cover.

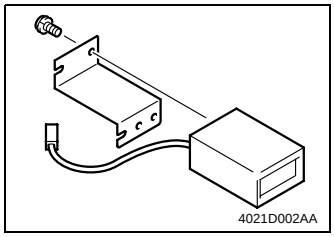

3. Using one screw, secure the Mechanical Counter to its mounting bracket.

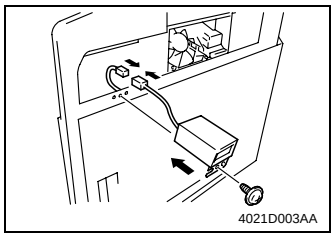

4. Connect the Mechanical Counter connector.
5. Using one screw, secure the Counter Assy.

NOTE

- *When the Mechanical Counter is mounted, set "Mechanical Total Counter" of the Security mode to "1." (For details, see SWITCHES ON PWBs/ TECH. REP. SETTINGS.)*

SWITCHES ON PWBs, TECH. REP. SETTINGS

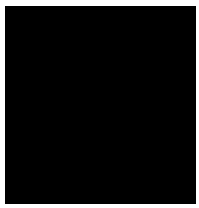

CONTENTS

1. CONTROL PANEL KEYS AND TOUCH PANEL S-1
1-1. Control Panel Keys S-1
2. UTILITY MODE S-4
2-1. Settings in the Utility Mode S-4
2-2. Utility Mode Setting Procedure S-4
(1) User's Choice Mode (Display: U-1) S-4
(2) Drum Dehumidify Mode (Display: U-2) S-9
(3) Toner Replenisher Mode (Display: U-3) S-9
(4) Custom Size Input Mode (Display: U-4) S-9
(5) Administrator Mode (Display: U-5) S-10
3. TECH.REP.MODE S-13
3-1. Tech.Rep.Mode Menu Function Tree S-13
3-2. Tech.Rep.Mode Function Setting Procedure S-14
3-3. Setting in the Tech.Rep.Mode S-15
(1) Control Panel LED Check S-15
(2) Function S-15
(3) Tech.Rep.Choice S-16
(4) Counter Mode S-18
(5) ATDC Sensor Output S-21
(6) Level History S-21
(7) ROM Version S-21
(8) Administrator No. Input S-22
(9) Change Fixed Zoom S-22
(10) Marketing Area Setting S-22
(11) Memory Clear S-23
(12) Total Clear S-23
(13) ADF Document Passage Test S-23
(14) ADF Original Glass Check S-24
(15) Scanner Move Check S-24
(16) Serial No. Display S-24
4. SECURITY MODE S-25
4-1. Settings in the Security Mode S-25
4-2. Security Mode Setting Procedure S-25
4-3. Setting in the Security Mode S-26
5. ADJUST MODE S-27
5-1. Settings in the Adjust Mode S-27
5-2. Adjust Mode Setting Procedure S-27
5-3. Setting in the Adjust Mode S-28

1. CONTROL PANEL KEYS AND TOUCH PANEL

1-1. Control Panel Keys

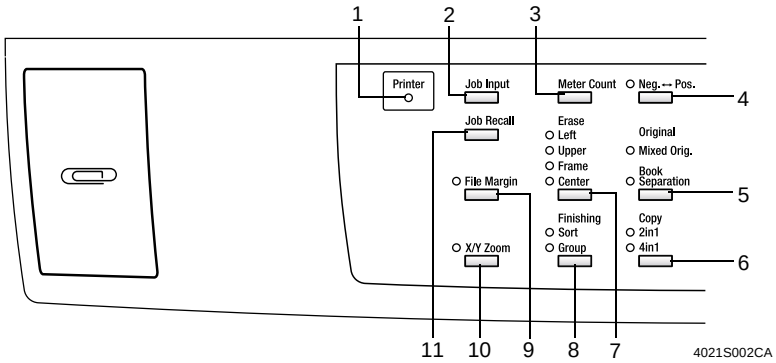

Metric area

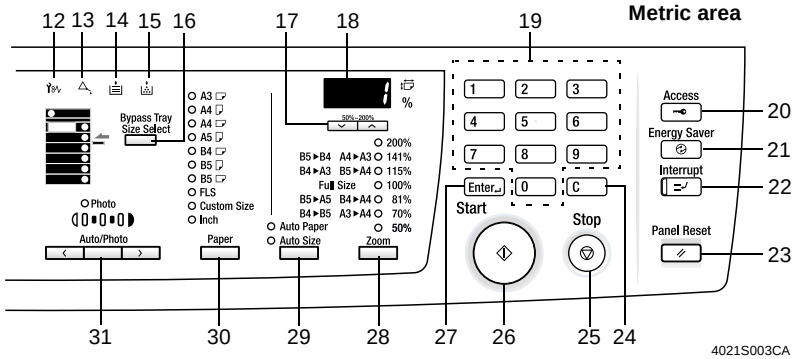

Inch area

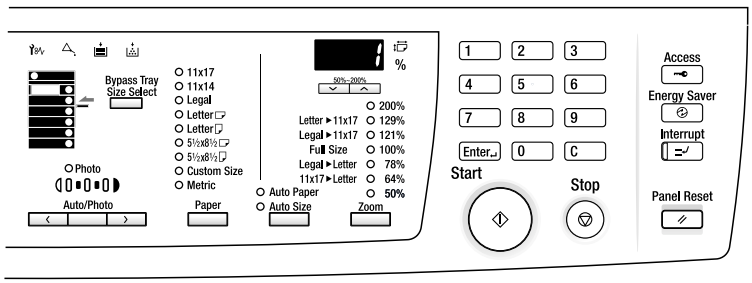

No.	Name	Description
1	Printer Lamp	Lit while data received from personal computer is being printed
2	Job Input key	Press to select the Job Input mode. Two different jobs can be programmed.
3	Meter Counter key	Press to display the Total Counter or Size Counter value.
4	Neg.↔ Pos. key	Press to copy an original with the original total arrangements reversed.
5	Original key	Press to select the Mixed Orig. or Book Separation function.
6	Copy key	Press to select the 2in1 or 4in1 function.
7	Erase key	Press to select the erase position.
8	Finishing key	Press to select the finishing function.
9	File Margin key	Press to select the File Margin mode.
10	X/Y Zoom key	Press to make a copy with different zoom ratios set for X (horizontal) and Y (vertical) directions.
11	Job Recall key	Press to recall either one of the two jobs previously stored in memory.
12	Paper Misfeed indicator	Lights up when a paper misfeed occurs in the copier.
	Malfunction indicator	Lights up when malfunction occurs in the copier.
13	Maintenance indicator	Blinks or lights up when the time approaches that copier needs maintenance service.
14	Add Paper indicator	Lights up when paper source currently selected for use runs out of paper.
15	Add Toner indicator	Lights up when toner will soon run out.
16	Bypass Tray Size Select key	Press to select the size of the paper loaded in the Bypass Tray.
17	Zoom (∧∨) key	• Press to change the zoom ratio in the range between 50 % and 200 % in 1 % increments. • What is shown on the Display changes from the number of copies to be made to the zoom ratio.
18	Display	Shows the number of copies to be made, the zoom ratio, and other setting data.
19	10-key Pad	Use to type in the number of copies to be made and any other numeric data.
20	Access key	• Press when entering an account number. • Becomes valid only when Copy Track has been set.
21	Energy Saver key	Press to set the copies into the Energy Saver mode.
22	Interrupt key	Press to interrupt a copy job.
23	Panel Reset key	• Press to reset all copy functions and settings to their defaults. • Holding down the key for 3 seconds or more will set the copies into the Utility mode.

No.	Name	Description
24	Clear key	Press to reset the number of copies to “1”.
25	Stop key	• Press to stop a print cycle. • Press to stop a scanning sequence.
26	Start key	• Press to start a scanning sequence. • Press to start a print cycle. • Press to validate the setting just made. • The key lights up green when the copier is ready to make copies, orange when it is not ready to make copies.
27	Enter key	Press to validate the setting just made.
28	Zoom key	Press to select a zoom ratio from among those fixed ratio available as standard.
29	Auto Paper/Auto Size key	Press to select either Auto Paper or Auto Size.
30	Paper key	Press to select the paper size.
31	Auto/Photo key	Press to adjust the image density of the copy.

2. UTILITY MODE

• Utility Mode is used to make various settings according to the user's need.

2-1. Settings in the Utility Mode

Code No.	Description
U-1	User's Choice Mode
U-2	Drum Dehumidify Mode
U-3	Toner Replenisher Mode
U-4	Custom Size Input Mode
U-5	Administrator Mode

2-2. Utility Mode Setting Procedure

<Procedure>
1. Hold down the Panel Reset key for 3 seconds.
2. Using the 10-Key Pad, enter the code corresponding to the desired subfunction.
   Code No.: 1 to 5
3. Press the Start key.

<Exiting the Mode>
• Press the Panel Reset key.

(1) User's Choice Mode (Display: U-1)

• User's Choice is used to make various settings according to the user's need.

1. Settings in the User's Choice Mode

Code No.	Function
C-1	Mixed Orig.
C-2	Paper Priority
C-3	Copy Priority
C-4	Density Priority
C-5	Density Level (Auto)
C-6	Density Level (Manual)
C-7	Output Priority
C-8	Crisscross Mode
C-9	4in1 Copy Order
C10	Book Binding Position
C11	Margin Setting
C12	Erase Setting (Left)
C13	Erase Setting (Upper)
C14	Erase Setting (Frame)
C15	Auto Panel Reset
C16	Energy Saver
C17	Auto Shut OFF

Code No.	Function
C18	Density (ADF)
C19	Print Density
C20	Paper Auto Detection (1st Tray)
C21	Paper Auto Detection (2nd Tray)
C22	Paper Auto Detection (3rd Tray)
C23	Paper Auto Detection (4th Tray)
C24	Paper Auto Detection (5th Tray)
C25	Paper Size Detection (1st Tray)
C26	Paper Type (1st Tray)
C27	Paper Type (Bypass Tray)
C28	Special Paper Setting (1st Tray)
C29	Special Paper Setting (2nd Tray)
C30	Special Paper Setting (3rd Tray)
C31	Special Paper Setting (4th Tray)
C32	Special Paper Setting (5th Tray)
C33	Special Paper Setting (Multiple Bypass Tray)

2. User's Choice Mode Setting Procedure

<Procedure>

1. Hold down the Panel Reset key for 3 seconds.
2. Enter "1" from the 10-Key Pad. (Display: U-1)
3. Press the Start key.
4. Enter the corresponding code number from the 10-Key Pad.
5. Press the Start key. Then, the Display will show the current setting value.
6. Press the Clear key to reset the current setting value.
7. Enter the new setting value from the 10-Key Pad.
8. Press the Start key. This will validate the new setting value just entered.
   If any value outside the available setting range is entered, the Display shows "Err" rejecting the entry. (The old setting value will reappear on the Display 1 sec. later.)

<Exiting the Mode>

- Press the Panel Reset key until the initial screen reappears.

3. Setting in the User's Choice Mode

<table>
<tr><th>Code No.</th><th>Setting (The default is Highlighted).</th></tr>
<tr><td>C-1</td><td><Mixed Orig.>
Select the priority Mixed Original Detection mode that is automatically selected when the Power Switch is turned ON or Panel Reset key pressed.
<table>
<tr><td>Setting</td><td>0</td><td>1</td></tr>
<tr><td>Description</td><td>Mixed Orig. enabled</td><td>Mixed Orig. disabled</td></tr>
</table></td></tr>
<tr><td>C-2</td><td><Paper Priority>
Select the priority paper size or paper source that is automatically selected when the copier is set into the Auto Size or Manual mode.
<table>
<tr><th>Setting</th><th>Description</th><th>Setting</th><th>Description</th></tr>
<tr><td>0</td><td>A3 (L)</td><td>12</td><td>Legal (L)</td></tr>
<tr><td>1</td><td>B4 (L)</td><td>13</td><td>Letter (L)</td></tr>
<tr><td>2</td><td>A4 (L)</td><td>14</td><td>Invoice (L)</td></tr>
<tr><td>3</td><td>B5 (L)</td><td>15</td><td>Letter (C)</td></tr>
<tr><td>4</td><td>A5 (L)</td><td>16</td><td>Invoice (C)</td></tr>
<tr><td>5</td><td>FLS (L)</td><td>20</td><td>1st Tray</td></tr>
<tr><td>6</td><td>A4 (C)</td><td>21</td><td>2nd Tray</td></tr>
<tr><td>7</td><td>B5 (C)</td><td>22</td><td>3rd Tray</td></tr>
<tr><td>8</td><td>A5 (C)</td><td>23</td><td>4th Tray</td></tr>
<tr><td>10</td><td>Ledger (L)</td><td>24</td><td>5th Tray</td></tr>
<tr><td>11</td><td>11×14 (L)</td><td>25</td><td>Multiple Bypass Tray</td></tr>
</table>
Initial setting: Metric area "6"/Inch area "15"</td></tr>
<tr><td>C-3</td><td><Copy Priority>
Select the priority Auto mode (Auto Paper or Auto Size) selected when the Power Switch is turned ON or Panel Reset key pressed.
<table>
<tr><td>Setting</td><td>0</td><td>1</td><td>2</td></tr>
<tr><td>Description</td><td>Auto paper</td><td>Auto Size</td><td>Manual</td></tr>
</table></td></tr>
</table>

<table>
<tr><th>Code No.</th><th>Setting (The default is Highlighted).</th></tr>
<tr><td>C-4</td><td><Density Priority>
Select the priority exposure mode selected when the Power Switch is turned ON or Panel Reset key pressed.
<table>
<tr><td>Setting</td><td>0</td><td>1</td><td>2</td></tr>
<tr><td>Description</td><td>Auto</td><td>Manual</td><td>Photo Manual</td></tr>
</table></td></tr>
<tr><td>C-5</td><td><Density Level (Auto)>
Select the priority exposure level in the Auto Exposure mode.
<table>
<tr><td>Setting</td><td>0</td><td>1</td><td>2</td></tr>
<tr><td>Description</td><td>Lighter</td><td>Normal</td><td>Darker</td></tr>
</table></td></tr>
<tr><td>C-6</td><td><Density Level (Manual)>
Select the priority exposure level in the Manual Exposure mode.
<table>
<tr><td>Setting</td><td>1</td><td>2</td><td>3</td><td>4</td><td>5</td></tr>
<tr><td rowspan="2">Description</td><td>Step 1</td><td>Step 2</td><td>Step 3</td><td>Step 4</td><td>Step 5</td></tr>
<tr><td colspan="5">Lighter ◄——————► Darker</td></tr>
</table></td></tr>
<tr><td>C-7</td><td><Output Priority>
Select the priority finishing type.
<table>
<tr><td>Setting</td><td>0</td><td>1</td><td>2</td></tr>
<tr><td>Description</td><td>Non-Sort</td><td>Sort</td><td>Group</td></tr>
</table></td></tr>
<tr><td>C-8</td><td><Crisscross Mode>
Select whether to enable or disable crisscross sorting automatically
<table>
<tr><td>Setting</td><td>0</td><td>1</td></tr>
<tr><td>Description</td><td>Enabled</td><td>Disabled</td></tr>
</table></td></tr>
<tr><td>C-9</td><td><4in1 Copy Order>
Specify the default copying order in the 4in1 mode.
<table>
<tr><td>Setting</td><td>0</td><td>1</td></tr>
<tr><td>Description</td><td><table><tr><td>1</td><td>2</td></tr><tr><td>3</td><td>4</td></tr></table></td><td><table><tr><td>1</td><td>3</td></tr><tr><td>2</td><td>4</td></tr></table></td></tr>
</table></td></tr>
<tr><td>C10</td><td><Book Binding Position>
Select whether to the copier scan the left-hand-side page (Left-bound) or the right-hand-side page (Right-bound) first when it scans an open book.
<table>
<tr><td>Setting</td><td>0</td><td>1</td></tr>
<tr><td>Description</td><td>Left-bound</td><td>Right-bound</td></tr>
</table></td></tr>
</table>

<table>
<tr><th>Code No.</th><th>Setting (The default is Highlighted).</th></tr>
<tr><td>C11</td><td><Margin Setting>
Adjust the margin width for the File Margin copy.
<table><tr><td>Setting</td><td>0 ..... 10 ..... 20</td></tr><tr><td>Description (mm)</td><td>0 ◄——————► 20</td></tr></table></td></tr>
<tr><td>C12</td><td><Erase Setting (Left)>
Adjust the erase width for the Left Erase copy.
<table><tr><td>Setting</td><td>5 ..... 10 ..... 20</td></tr><tr><td>Description (mm)</td><td>5 ◄——————► 20</td></tr></table></td></tr>
<tr><td>C13</td><td><Erase Setting (Upper)>
Adjust the erase width for the Upper Erase copy.
<table><tr><td>Setting</td><td>5 ..... 10 ..... 20</td></tr><tr><td>Description (mm)</td><td>5 ◄——————► 20</td></tr></table></td></tr>
<tr><td>C14</td><td><Erase Setting (Frame)>
Adjust the erase width for the Frame Erase copy.
<table><tr><td>Setting</td><td>5 ..... 10 ..... 20</td></tr><tr><td>Description (mm)</td><td>5 ◄——————► 20</td></tr></table></td></tr>
<tr><td>C15</td><td><Auto Panel Reset>
Select the time it takes the Auto Panel Reset function, which resets the panel settings when the set period of time elapses after a copy cycle has been completed or the last key operated, to be activated.
<table><tr><td>Setting</td><td>0</td><td>1 to 5</td><td>6</td></tr><tr><td>Description</td><td>30 sec.</td><td>1 min. to 5 min.</td><td>Disable</td></tr></table></td></tr>
<tr><td>C16</td><td><Energy Saver>
Select the time it takes the copier to enter the Energy Saver mode after a copy cycle has been completed or the last key operated.
<table><tr><td>Setting</td><td>1 ..... 15 .....240</td></tr><tr><td>Description</td><td>1 min. ◄——————► 240 min.</td></tr></table></td></tr>
<tr><td>C17</td><td><Auto Shut OFF>
Select the time it takes the Auto Shut Off function, which shuts down the copier when the set period of time elapses after a copy cycle has been completed or the last key operated, to be activated.
Note:
• The option of “0” can be set if “Yes” is selected for “Disable Auto Shut OFF” of the “Administrator Mode” function.
<table><tr><td>Setting</td><td>0</td><td>1..... 30 .....240</td></tr><tr><td>Description</td><td>Disabled</td><td>1 min. ◄——————► 240 min.</td></tr></table></td></tr>
</table>

<table>
<tr><th>Code No.</th><th>Setting (The default is Highlighted).</th></tr>
<tr><td>C18</td><td><Density ADF>
Adjust the copy image density level when the ADF is being used.
<table>
<tr><th>Setting</th><th>Description</th></tr>
<tr><td>0</td><td>When the standard original (text, etc.) is used.</td></tr>
<tr><td>1</td><td>To give better reproduction of faint original.</td></tr>
</table></td></tr>
<tr><td>C19</td><td><Priority Density>
Set the image density level for printing
<table>
<tr><td>Setting</td><td>0 1 2 3 4</td></tr>
<tr><td>Description</td><td>Lighter. ◄——————► Darker</td></tr>
</table></td></tr>
<tr><td>C20 to 24</td><td><Paper Auto Detection>
Select the system of measurement of the paper for automatic paper size detection.
<table>
<tr><td>Setting</td><td>0</td><td>1</td></tr>
<tr><td>Description</td><td>Inch</td><td>Metric</td></tr>
</table>
Initial setting: Metric area “1”/Inch area “0”
C20: 1st Tray C21: 2nd Tray C22: 3rd Tray
C23: 4th Tray C25: 5th Tray</td></tr>
<tr><td>C25</td><td><Paper Size Detection>
Select the paper size detection method for the 1st Tray. If paper of a nonstandard size is to be used, select “1.” Size input is made using “U-4.”
<table>
<tr><td>Setting</td><td>0</td><td>1</td></tr>
<tr><td>Description</td><td>Automatic detection</td><td>Size input</td></tr>
</table></td></tr>
<tr><td>C26</td><td><Paper Type (1st Tray)>
Select the type of paper loaded in the 1st Tray.
<table>
<tr><td>Setting</td><td>0</td><td>1</td><td>2</td></tr>
<tr><td>Description</td><td>Plain Paper</td><td>Cards</td><td>OHP</td></tr>
</table></td></tr>
<tr><td>C27</td><td><Paper Type (Bypass Tray)>
Select the type of paper loaded in the Bypass Tray.
<table>
<tr><td>Setting</td><td>0</td><td>1</td><td>2</td></tr>
<tr><td>Description</td><td>Plain Paper</td><td>Cards</td><td>OHP</td></tr>
</table></td></tr>
</table>

<table>
<tr><th>Code No.</th><th>Setting (The default is Highlighted).</th></tr>
<tr><td>C28 to 33</td><td><Special Paper Setting>
Allow Paper of same type to be fed from another tray when paper from one source is empty.
<table>
<tr><th>Setting</th><th>Description</th></tr>
<tr><td>0</td><td>Enables Auto Paper (selection). Enables Auto Tray Switching.</td></tr>
<tr><td>1</td><td>Disables Auto Paper. Enables Auto Tray Switching.</td></tr>
<tr><td>2</td><td>Disables Auto Paper. Disables Auto Tray Switching.</td></tr>
</table>
C20: 1st Tray C21: 2nd Tray C22: 3rd Tray
C23: 4th Tray C25: 5th Tray C23: Multiple Bypass Tray</td></tr>
</table>

(2) Drum Dehumidify Mode (Display: U-2)

• Removes dewdrops that have formed on the surface of the PC Drum.

<Procedure>

1. Hold down the Panel Reset key for 3 seconds.
2. Enter “2” from the 10-Key Pad. (Display: U-2)
3. Press the Start key. The Drum Dry sequence will be stopped after a given period of time.

(3) Toner Replenisher Mode (Display: U-3)

• Supply of toner is replenished. The replenishing sequence is stopped after a given period of time or when a required level of toner-to-carrier ratio is recovered.

<Procedure>

1. Hold down the Panel Reset key for 3 seconds.
2. Enter “3” from the 10-Key Pad. (Display: U-3)
3. Press the Start Key.

(4) Custom Size Input Mode (Display: U-4)

• Input the size of the paper loaded in the 1st Tray. (This is necessary when paper of a nonstandard size is to be used.)

<Procedure>

1. Hold down the Panel Reset key for 3 seconds.
2. Enter “4” from the 10-Key Pad. (Display: U-4)
3. Press the Start key. Then, the Display will show the currently set value (in the FD direction).
4. Press the Clear key to reset the currently set value.
5. Enter the new value from the 10-Key Pad.
6. Press the Start key. Then, the Display will show the currently set value (in the CD direction).
7. Press the Clear key to reset the currently set value.
8. Enter the new value from the 10-Key Pad.
9. Press the Start key to validate the values entered.

✻ If a value entered falls outside the specified range (paper size), that entry is rejected and the old value is restored.

<Exiting the Mode>

• Press the Panel Reset key.

(5) Administrator Mode (Display: U-5)

- The entry on the “Administrator No. Input” set using the Tech. Rep. Mode permits the settings of the following functions.

1. Administrator Mode Function Setting Procedure

<Procedure>

1. Hold down the Panel Reset key for 3 seconds.
2. Enter “5” from the 10-Key Pad. (Display: U-5)
3. Press the Start Key.
4. Enter the Administrator number from the 10-Key pad.
5. Press the Start Key. (Display: Ad)

✻ If a mismatch is detected of the administrator number, the Display shows “---.”

6. Enter the code assigned to the desired subfunction from the 10-Key Pad. (1 or 2)
7. Press the Start Key.

<Exiting the Mode>

- Press the Panel Reset key until the initial screen reappears.

2. Administrator Mode Function Tree

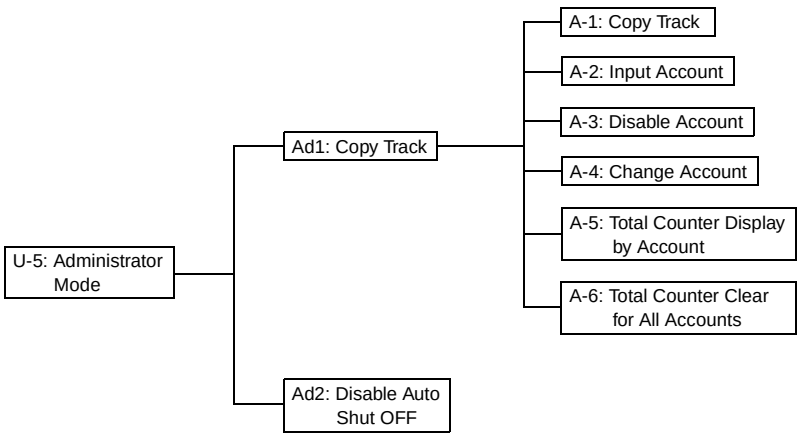

3. Setting in the Administrator Mode

<table>
<tr><th>Code No.</th><th>Setting (The default is Highlighted).</th></tr>
<tr><td>U-5</td><td><Administrator Mode>
Allows for setting two functions, “Copy Track” and “Disable Auto Shut OFF.”</td></tr>
<tr><td>Ad1</td><td><Copy Track>
Allows for making the six different subfunctions.</td></tr>
<tr><td>Ad2</td><td><Disable Auto Shut OFF>
Select whether to allow the option “0” to be select in User’s choice function no.17.
<table>
<tr><td>Setting</td><td>0</td><td>1</td></tr>
<tr><td>Description</td><td>Authorized</td><td>Not authorized</td></tr>
</table>
<Procedure>
1. Enter “2” from the 10-Key Pad.
2. Press the Start key to show the current setting value.
3. Press the Clear key to reset the current setting value.
4. Enter the new setting value from the 10-Key Pad.
5. Press the Start key to validate the new setting value just entered.</td></tr>
<tr><td>A-1</td><td><Copy Track>
Select whether to enable or disable Copy Track. (Up to 20 different accounts can be controlled under Copy Track.)
<table>
<tr><td>Setting</td><td>0</td><td>1</td></tr>
<tr><td>Description</td><td>Copy Track enabled</td><td>Copy Track disabled</td></tr>
</table>
<Procedure>
1. Enter “1” from the 10-Key Pad. (Display: A-1)
2. Press the Start key to show the current setting value.
3. Press the Clear key to reset the current setting value.
4. Enter the new setting value from the 10-Key Pad.
5. Press the Start key to validate the new setting value just entered.</td></tr>
<tr><td>A-2</td><td><Input Account>
Using the 10-Key Pad, enter a 3-digit access number that can range from 001 to 999. The access number corresponds to the account number.
<Procedure>
1. Enter “2” from the 10-Key Pad. (Display: A-2)
2. Press the Start key. This will blank out the Display.
✻ If 20 accounts have already been programmed, the contents of the Display alternate between “A-2” and “blank.”
3. Enter the access number from the 10-Key Pad.
4. Press the Start key to validate the access number just entered.
✻ If the access number just entered already exists, “Err” appears on the Display and then the Display blanks out.
In this case, perform steps 3 and 4 again.</td></tr>
</table>

Code No.	Setting (The default is **Highlighted**).
A-3	<Delete Account> Delete an account (access number) which has previously been stored. <Procedure> 1. Enter “3” from the 10-Key Pad. (Display: A-3) 2. Press the Start key. This will blank out the Display. ✻ If no accounts are yet to be programmed, the contents of the Display alternate between “A-3” and “blank.” 3. Press the Zoom key to display the account to be deleted. 4. Press the Start key to delete the account.
A-4	<Change Account> Change an access number which has previously been programmed. <Procedure> 1. Enter “4” from the 10-Key Pad. (Display: A-4) 2. Press the Start key. This will blank out the Display. ✻ If no accounts are yet to be programmed, the contents of the Display alternate between “A-4” and “blank.” 3. Press the Zoom key to display the access number to be changed. 4. Press the Start key to validate the access number displayed. 5. Enter a new access number from the 10-Key Pad. 6. Press the Start key to validate the new access number just entered. ✻ If the new access number just entered already exists, “Err” appears on the Display and then the Display blanks out. In this case, perform steps 5 and 6 again.
A-5	<Total Counter Display by Account> Display the count of the Total Counter for each account. <Procedure> 1. Enter “5” from the 10-Key Pad. (Display: A-5) 2. Press the Start key. This will blank out the Display. ✻ If no accounts are yet to be programmed, the contents of the Display alternate between “A-5” and “blank.” 3. Press the Zoom key to display the access number. 4. Press the Start key to validate the access number displayed. 5. Press the Start key. This will allow the Total Counter value to be displayed. E.g.: “123” and “456” alternate if the count is 123,456. 6. Press the Clear key to clear the count. If the count is mistakenly cleared, press the Interrupt key, which will restore the count just cleared.
A-6	<Total Counter Clear for All Accounts> Clear the Total Counter counts for all accounts. <Procedure> 1. Enter “6” from the 10-Key Pad. (Display: A-6) 2. Press the Start key. Then, “CLr” appears on the Display. 3. Press the Start key again to clear all counts.

3. TECH.REP.MODE

• This mode allows the Tech. Rep. to set adjust, and/program various service functions.

3-1. Tech.Rep.Mode Menu Function Tree

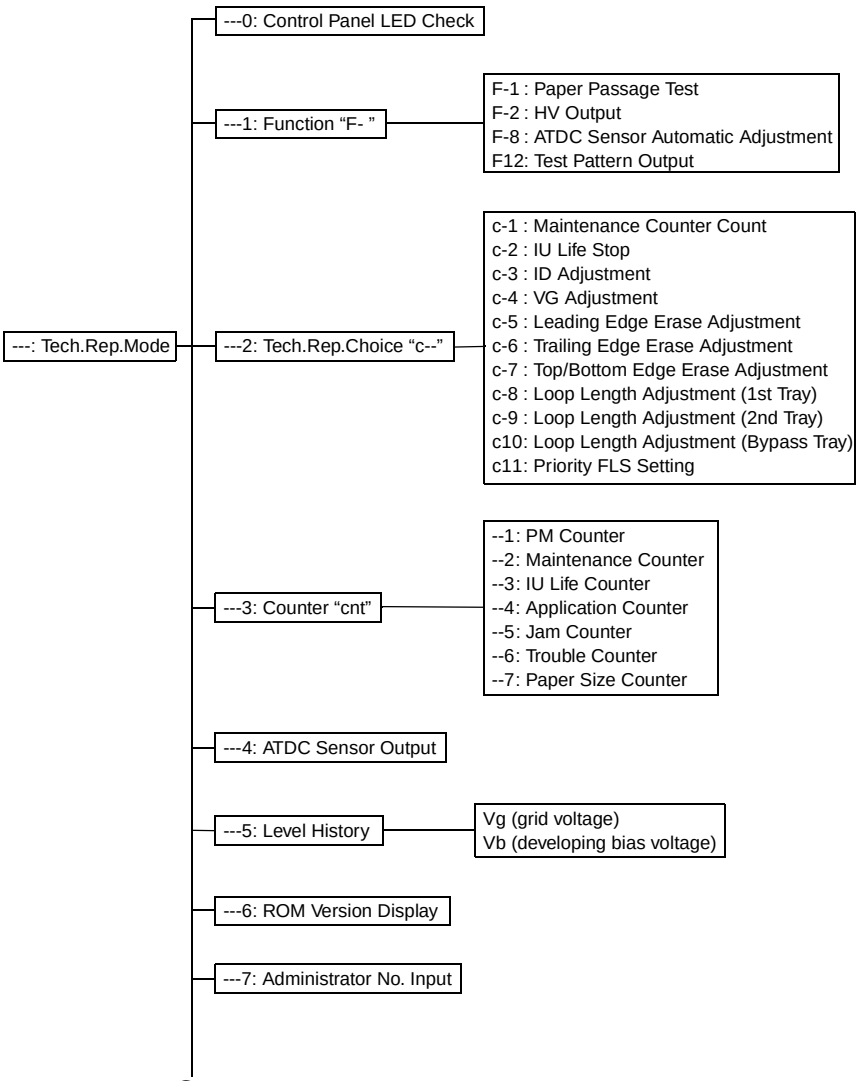

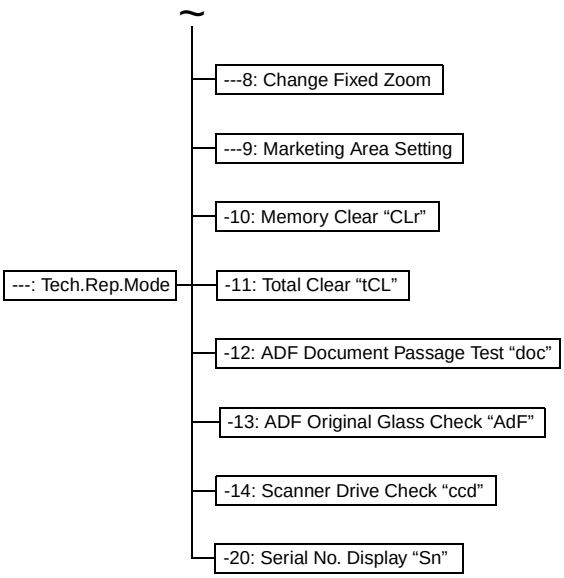

3-2. Tech.Rep.Mode Function Setting Procedure

<Procedure>
1. Press the Meter Count key.
2. Press the following keys in this order:
   Stop → 0 → 0 → Stop → 0 → 1
3. Enter the code number corresponding to the function to be used from the 10-Key Pad.
   Code No.: 0 to 14,20
4. Press the Start Key.

<Exiting the Mode>
- Press the Panel Reset key until the initial screen reappears.

3-3. Setting in the Tech.Rep.Mode

(1) Control Panel LED Check

- The LEDs on the control panel are made to blink to check for any LED that has burned out.
  Any LED that is not blinking is considered to be out.

(2) Function

- This function allows the Tech. Rep. to make the various function tests and adjustments.

<Procedure>
1. Enter the code number corresponding to the function to be used from the 10-Key Pad.
2. Press the Start key.

<Exiting the Mode>
- Press the Panel Reset key until the initial screen reappears.

Code No.	Operation
F-1	<Paper Passage Test> Correct paper passage (paper transport path) is checked without involving any printing action. This test is used to check for a paper misfeed and transport path. <Procedure> 1. Select the paper source. 2. Press the Start key to start the paper passage cycle. 3. Press the Stop key to stop the paper passage cycle.
F-2	<HV Output> This test is for factory adjustment only and should NOT be used.
F-8	<ATDC Sensor Automatic Adjustment> Adjusts the output level of the ATDC Sensor. This test is used when the copier is set up, developer is changed, and the IU is replaced. ✻ For details, see DIS/REASSEMBLY, ADJUSTMENT.
F12	<Test Pattern Output> Outputs a test pattern. (Halftone) This test is used to determine whether the engine is responsible for an image problem which has occurred or the IR is responsible for it. <Procedure> 1. Select the paper source. 2. Press the Start key to start the output sequence.

(3) Tech.Rep.Choice

• This function allows the Tech. Rep. to make various settings and adjustments.

<Procedure>

1. Enter the code number corresponding to the function to be used from the 10-Key Pad.
2. Press the Start key to display the current setting value.
3. Press the Clear key to clear the current setting value.
4. Enter the new setting value from the 10-Key Pad.
5. Press the Start key to validate the new setting value just entered.
   If any value outside the available setting range is entered, the Display shows “Err” rejecting the entry. (The old setting value will reappear on the Display 1 sec. later.)

<Exiting the Mode>

• Press the Panel Reset key until the initial screen reappears.

<table>
<tr><th>Code No.</th><th>Setting (The default is Highlighted).</th></tr>
<tr><td>C-1</td><td>
<Maintenance Counter Count>
Select the counting method of the maintenance counter.
It is used as guidelines for the number of copies to be made before the next maintenance time.
<table>
<tr><th>Setting</th><th>Description</th></tr>
<tr><td>0</td><td>Not Count</td></tr>
<tr><td>1</td><td>Counted (Maintenance Indicator lights when a setting value is reached.)</td></tr>
<tr><td>2</td><td>Counted (No new copy cycle can be initiated and the Tech. Rep. Call LED lights when a setting value is reached.)</td></tr>
</table>
</td></tr>
<tr><td>C-2</td><td>
<IU Life Stop>
Select whether to prohibit copying or not when the IU Counter reaches a life value.
<table>
<tr><td>Setting</td><td>0</td><td>1</td></tr>
<tr><td>Description</td><td>Copying allowed</td><td>Copying prohibited</td></tr>
</table>
</td></tr>
<tr><td>C-3</td><td>
<ID Adjustment>
Set the central value of image density.
This function is used when image density is not satisfactory.
<table>
<tr><td>Setting</td><td>0 1 2 3 4 5 6</td></tr>
<tr><td>Description</td><td>Lighter ◄——————► Darker</td></tr>
</table>
</td></tr>
<tr><td>C-4</td><td>
<VG Adjustment>
Vary the Vg voltage to adjust image density.
The function is used when a fog or a void occurs.
Increase the setting value to eliminate void.
Decrease the setting value to eliminate fog.
<table>
<tr><td>Setting</td><td>0 1 2 3 4</td></tr>
<tr><td>Description</td><td>Lighter ◄——————► Darker</td></tr>
</table>
</td></tr>
</table>

<table>
<tr><th>Code No.</th><th>Setting (The default is Highlighted).</th></tr>
<tr><td>C-5</td><td><Leading Edge Erase Adjustment>
Select whether to enable or disable the leading edge erase.
<table><tr><td>Setting</td><td>0 1 2 3 4 5</td></tr><tr><td>Description (mm)</td><td>0 ◄——————► 5</td></tr></table></td></tr>
<tr><td>C-6</td><td><Trailing Edge Erase Adjustment>
Select whether to enable or disable the trailing edge erase.
<table><tr><td>Setting</td><td>0 1 2 3 4 5</td></tr><tr><td>Description (mm)</td><td>0 ◄——————► 5</td></tr></table></td></tr>
<tr><td>C-7</td><td><Top/Bottom Edge Erase Adjustment>
Select the width of erase on the top and bottom edges.
<table><tr><td>Setting</td><td>0 1 2 3 4 5</td></tr><tr><td>Description (mm)</td><td>0 ◄——————► 5</td></tr></table></td></tr>
<tr><td>C-8</td><td><Loop Length Adjustment (1st Tray)>
Adjust the length of the loop formed before the Synchronizing Roller when a skew or misfeed occurs. (1st Tray)
<table><tr><td>Setting</td><td>0 ..... 7 ..... 14</td></tr><tr><td>Description (mm)</td><td>-3.9 ◄——————► +3.9</td></tr></table></td></tr>
<tr><td>C-9</td><td><Loop Length Adjustment (2nd Tray)>
Adjust the length of the loop formed before the Synchronizing Roller when a skew or misfeed occurs. (2nd Tray)
<table><tr><td>Setting</td><td>0 ..... 7 ..... 14</td></tr><tr><td>Description (mm)</td><td>-3.9 ◄——————► +3.9</td></tr></table></td></tr>
<tr><td>C10</td><td><Loop Length Adjustment (Bypass Tray)>
Adjust the length of the loop formed before the Synchronizing Roller when a skew or misfeed occurs. (Bypass Tray)
<table><tr><td>Setting</td><td>0 ..... 7 ..... 14</td></tr><tr><td>Description (mm)</td><td>-3.9 ◄——————► +3.9</td></tr></table></td></tr>
<tr><td>C11</td><td><Priority FLS Setting>
Set the size for FLS.
<table><tr><th>Setting</th><th>Description</th></tr><tr><td>0</td><td>330×203</td></tr><tr><td>1</td><td>330×210</td></tr><tr><td>2</td><td>330×216</td></tr><tr><td>3</td><td>330×220</td></tr><tr><td>4</td><td>337×206</td></tr></table></td></tr>
</table>

(4) Counter Mode

• Shows the number of copies made on each paper size or type.

<Procedure>

1. Enter the code number corresponding to the function to be used from the 10-Key Pad.
2. Press the Start key to show the count.
   If the count consists of 4 or more digits, it is displayed in two groups alternately as follows.
   E.g.: “123” and “456” alternate if the count is 123,456.
3. Press the Paper key to select the display of another counter.
4. Call the counter count to be cleared on the Display.
5. Press the Clear Key.
   Press Interrupt key to undo the clearing operation, restoring the original setting.
6. Press the Start Key.

<Exiting the Mode>

• Press the Panel Reset key until the initial screen reappears.

<table>
<tr><th>Code No.</th><th>Setting</th></tr>
<tr><td>--1</td><td>
<PM Counter>
Counts the frequency of use of each of the different parts of the copier.
The count should be cleared when the corresponding PM part is replaced.
<table>
<tr><th>Display</th><th>Description</th></tr>
<tr><td>1</td><td>Bypass Tray</td></tr>
<tr><td>2</td><td>1st Tray</td></tr>
<tr><td>3</td><td>2nd Tray</td></tr>
<tr><td>4</td><td>3rd Tray</td></tr>
<tr><td>5</td><td>4th Tray</td></tr>
</table>
<table>
<tr><th>Display</th><th>Description</th></tr>
<tr><td>6</td><td>5th Tray</td></tr>
<tr><td>7</td><td>ADF</td></tr>
<tr><td>8</td><td>IR</td></tr>
<tr><td>9</td><td>Ozone Filter</td></tr>
<tr><td>10</td><td>Image Transfer Roller/Fusing Unit</td></tr>
</table>
</td></tr>
<tr><td>--2</td><td>
<Maintenance Counter>
Enter a value for the maintenance counter (for any given part).
The count is based on a countdown system and when the set value is counted down to “0,” the Maintenance Indicator lights.
If counting continues after “0,” a minus sign (-) is appended to the value shown on the Display.
NOTE
• The above counting method varies depending on the setting made for “c-1” of Tech. Rep. Choice.
The Display shows “nc1” if copying is prohibited.
<Procedure>
1. Press the Start key to display the current count.
2. Press the Clear key to clear the current count.
If the current count is mistakenly cleared, press the Interrupt key to restore the count just cleared.
3. Enter the new value from the 10-Key Pad (that can range from 0 to 999999).
4. Press the Start key to validate the new setting just made.
</td></tr>
</table>

<table>
<tr><th>Code No.</th><th>Setting</th></tr>
<tr><td>--3</td><td>
<IU Life Counter>
Show the count of the IU Life Counter.
The count is based on a countdown system and, if counting continues after “0,” a minus sign (-) is appended to the value shown on the Display.
The count is controlled according to the period of time through which the PC Drum has turned and, when a near-life value is reached, the Maintenance Indicator blinks.
<Procedure>
1. Press the Start key to display the current count.
2. Press the Clear key to clear the current count.
If the current count is mistakenly cleared, press the Interrupt key to restore the count just cleared.
3. Press the Start key to automatically set “40,000.” (The value “40,000” is the starting value from which it is counted down.)
✻ No value can be set from the 10-Key Pad.
NOTES
• There are some discrepancies between the count and the actual number of copies made.
• The setting made in “c-2” of Tech. Rep. Choice determines the copying operation after the life value has been reached.
If “Copying prohibited” is selected, “nc2” is displayed and the Maintenance Indicator lights steadily.
</td></tr>
<tr><td>--4</td><td>
<Application Counter>
The count is made according to the application..
<table>
<tr><th>Display</th><th>Description</th></tr>
<tr><td>1</td><td>No. of copies made.</td></tr>
<tr><td>2</td><td>No. of printed pages produced through PC</td></tr>
</table>
</td></tr>
<tr><td>--5</td><td>
<Jam Counter>
Counts the number of misfeeds that have occurred at different locations in the copier.
<table>
<tr><th>Display</th><th>Description</th></tr>
<tr><td>1</td><td>Bypass Tray</td></tr>
<tr><td>2</td><td>1st Tray</td></tr>
<tr><td>3</td><td>2nd Tray</td></tr>
<tr><td>4</td><td>3rd Tray</td></tr>
<tr><td>5</td><td>4th Tray</td></tr>
<tr><td>6</td><td>5th Tray</td></tr>
<tr><td>7</td><td>Paper take-up and vertical transport</td></tr>
<tr><td>8</td><td>Separator</td></tr>
<tr><td>9</td><td>Fusing Unit</td></tr>
<tr><td>10</td><td>ADF take-up</td></tr>
<tr><td>11</td><td>ADF transport</td></tr>
<tr><td>12</td><td>ADF exit</td></tr>
</table>
</td></tr>
</table>

<table>
<tr><th>Code No.</th><th>Setting</th></tr>
<tr><td>--6</td><td>
<Trouble Counter>
Counts the number of malfunctions that have occurred at different parts of the copier.
If all malfunction counters are “0,” “ALL” and “0” alternate.
<table>
<tr><th>Display</th><th>Description</th></tr>
<tr><td>1</td><td>Main Motor malfunction</td></tr>
<tr><td>2</td><td>Fusing Cooling Fan Motor malfunction</td></tr>
<tr><td>3</td><td>Power Supply Cooling Fan Motor malfunction</td></tr>
<tr><td>4</td><td>Toner Replenishing Motor malfunction</td></tr>
<tr><td>5</td><td>Faulty image transfer voltage</td></tr>
<tr><td>6</td><td>Warm-up failure</td></tr>
<tr><td>7</td><td>Abnormally low fusing temperature</td></tr>
<tr><td>8</td><td>Abnormally high fusing temperature</td></tr>
<tr><td>9</td><td>Scanner Home Sensor malfunction</td></tr>
<tr><td>10</td><td>Tray Selecting Motor malfunction</td></tr>
<tr><td>11</td><td>Shift Motor malfunction</td></tr>
<tr><td>12</td><td>ATDC Sensor malfunction</td></tr>
<tr><td>13</td><td>ATDC adjustment failure</td></tr>
<tr><td>14</td><td>ASIC/memory malfunction</td></tr>
<tr><td>15</td><td>Polygon Motor malfunction</td></tr>
<tr><td>16</td><td>HSYNC detection failure</td></tr>
<tr><td>17</td><td>EEPROM malfunction</td></tr>
<tr><td>18</td><td>Exposure Lamp malfunction</td></tr>
</table>
</td></tr>
<tr><td>--7</td><td>
<Paper Size Counter>
Counts the number of sheets of paper used according to the size and type.
<table>
<tr><th>Display</th><th>Description</th></tr>
<tr><td>1</td><td>A3 (L)</td></tr>
<tr><td>2</td><td>B4 (L)</td></tr>
<tr><td>3</td><td>A4 (L)</td></tr>
<tr><td>4</td><td>A4 (C)</td></tr>
<tr><td>5</td><td>B5 (L)</td></tr>
<tr><td>6</td><td>B5 (C)</td></tr>
<tr><td>7</td><td>A5 (L)</td></tr>
<tr><td>8</td><td>A5 (C)</td></tr>
<tr><td>9</td><td>FLS (L)</td></tr>
<tr><td>10</td><td>Ledger (L)</td></tr>
<tr><td>11</td><td>11×14 (L)</td></tr>
<tr><td>12</td><td>Legal (L)</td></tr>
</table>
<table>
<tr><th>Display</th><th>Description</th></tr>
<tr><td>13</td><td>Letter (L)</td></tr>
<tr><td>14</td><td>Letter (C)</td></tr>
<tr><td>15</td><td>Invoice (L)</td></tr>
<tr><td>16</td><td>Invoice (C)</td></tr>
<tr><td>17</td><td>Other size</td></tr>
<tr><td>18</td><td>Paper enabling Auto Paper/ enabling auto tray switching</td></tr>
<tr><td>19</td><td>Paper disabling Auto Paper/ enabling auto tray switching</td></tr>
<tr><td>20</td><td>Paper disabling Auto Paper/ disabling auto tray switching</td></tr>
<tr><td>21</td><td>OHP</td></tr>
<tr><td>22</td><td>Thick paper</td></tr>
</table>
</td></tr>
</table>

(5) ATDC Sensor Output

- This function displays a T/C ratio representing the current ATDC Sensor output value.
- It is used for checking the T/C when image density is not good.

✻ It is not possible to change or reset the sensor output data.

<Exiting the Mode>
- Press the Panel Reset key until the initial screen reappears.

(6) Level History

- This function displays the grid voltage and developing bias voltage.

✻ It is not possible to change or reset the voltage data.

<Procedure>
1. Press the Start key to display the current grid voltage (Vg).
2. Press the Zoom “down” key to display the current developing bias voltage (Vb).
   Press the Zoom “up” key to return to the display of the current grid voltage (Vg).

<Exiting the Mode>
- Press the Panel Reset key until the initial screen reappears.

(7) ROM Version

- This function displays the ROM version.
- It is used when upgrading the F/W or the PWB is replaced with a new one.
- The version is displayed in the order of the copier controller and engine.
- The version consists of 12 digits, each being displayed sequentially as the image density key (darker) (the digits flow in the left direction).

<Procedure>
1. Press the Start key to display the first 3 digits of the total 12.
2. Press the image density key (darker). Then, the leftmost digit will disappear and, instead, a new fourth digit will appear.
   Press the image density key (darker) a number of times to view the entire digits of the version.

✻ Pressing the image density key (lighter) will reverse the display of digits.

3. Press the Zoom “down” key to display the version of the engine ROM.
   Follow the same steps as those given above.

✻ Pressing the Zoom “up” or “down” key selects the display of the ROM version of the copier controller or engine.

<Exiting the Mode>
- Press the Panel Reset key until the initial screen reappears.

(8) Administrator No. Input

• Set an ID number for opening the “Administrator Mode” screen of Utility Mode from the 10-Key Pad.

<Procedure>

1. Press the Start key to alternately display the current administrator number.
2. Press the Clear key to clear the current administrator number.
3. Enter the new administrator number from the 10-Key Pad. The number should consist of 6 digits, ranging from 000000 to 999999.
4. Press the Start key to validate the new administrator number just entered.

(9) Change Fixed Zoom

• Change a fixed zoom ratio to a desired value.

✻ The ratios of 50 %, 100 %, and 200 % cannot be changed.

<Procedure>

1. Press the Start key to display the fixed zoom ratio.
2. Press the Zoom key to select the specific zoom ratio to be changed.
3. Press the Clear key to clear the zoom ratio selected.
4. Enter the new zoom ratio from the 10-Key Pad.
5. Press the Start key to validate the new zoom ratio just entered.
   If any value outside the allowable setting range is entered, the Display shows “Err” rejecting the entry. (The old zoom ratio will reappear on the Display 1 sec. later.)

(10) Marketing Area Setting

• Set the marketing area.

<Procedure>

1. Press the Start key to display the current marketing area setting.

Setting	Description
0	MSJ
1	MC
2	ME
3	China
4	Other areas

2. Press the Clear key to clear the current marketing area setting value.
3. Enter the new setting value from the 10-Key Pad.
4. Press the Start key to validate the setting value just entered.
   If any value outside the available setting range is entered, the Display shows “Err” rejecting the entry. (The old setting value will reappear on the Display 1 sec. later.)

(11) Memory Clear

• This function is used to clear all data except that of the various electronic counters.
<Procedure>
1. Press the Start key to display “CLr” on the Display.
2. Press the Start key to blank out the Display.
   Then, “CLr” will reappear.
3. Turn OFF and ON the Power Switch.

(12) Total Clear

• This function is used to clear all data of the various electronic counters.
<Procedure>
1. Press the Start key to display “tCL” on the Display.
2. Press the Start key to blank out the Display.
   Then, “tCL” will reappear.
3. Turn OFF and ON the Power Switch.

<List of Types of Data to be Cleared>

Clearing / Data Cleared	Door Open/Close	Memory Clear	Total Clear
Jam display	❍	❍	—
Trouble display	—	❍	—
Erratic operation/display	—	❍	—
Utility (*1)	—	❍	—
Tech.Rep.Mode (*2)	—	❍	—
Security	—	❍	—
Adjust	—	❍	—
Job programs	—	❍	—
Electronic counters	—	—	❍

❍: Cleared —: Not cleared
*1: Except Copy Track, Input Account, and Total Counter Display by Account.
*2: Except Marketing Area Setting and Serial No. Display.

(13) ADF Document Passage Test

• This function is used to check for correct document passage through the ADF when a document misfeed occurs.
<Procedure>
1. Load a paper stack in the Document Feeding Tray.
2. Press the Start key to let the ADF start feeding the paper.
3. Press the Stop key to stop the sequence.

✻ For details, see the relevant option service manual.

(14) ADF Original Glass Check

- The original scanning area of the ADF is scanned to check for possible dirt or scratches on the glass. The scanned area is produced as a copy.

<Procedure>

- Press the Start key to start the sequence.

✻ For details, see the relevant option service manual.

(15) Scanner Move Check

- This function is used to check the drive for the Scanner.
- It is also used when securing the Scanner in position with the fixing pin (for transportation of the machine).

<Procedure>

- Press the Start key. This will move the Scanner to the left and stop.

(16) Serial No. Display

- This function is used to display the serial number (consisting of 8 digits).

<Procedure>

- Press the Start key to display the serial number.
  E.g.: The Display shows “Sn” → “12” → “345” → “678” in that order if the serial number is 12345678.

4. SECURITY MODE

• Allows the Tech. Rep. to set the various counters.

4-1. Settings in the Security Mode

Code No.	Description
--1	Total Counter Count Mode
--2	Size Counter Count Mode
--3	Key Counter
--4	Total Counter

4-2. Security Mode Setting Procedure

<Procedure>
1. Set the machine into the Tech. Rep. Mode.
2. Press the following keys in this order:
   Stop → 9 (Display: SCU).
3. Enter the code number corresponding to the subfunction to be used.
   Code No.: 1 to 4
4. Press the Start key to display the current setting value.
5. Press the Clear key to clear the current setting value.
6. Enter the new setting value from the 10-Key Pad.
7. Press the Start key to validate the new setting value just entered.
   If any value outside the available setting range is entered, the Display shows “Err” rejecting the entry. (The old setting value will reappear on the Display 1 sec. later.)

<Exiting the Mode>
• Press the Panel Reset key until the initial screen reappears.

4-3. Setting in the Security Mode

<table>
<tr><th>Code No.</th><th>Setting (The default is Highlighted).</th></tr>
<tr><td>--1</td><td><Total Counter Count Mode>
Select the condition by which the Counter count is increased.
<table>
<tr><th>Setting</th><th>Description</th></tr>
<tr><td>0</td><td>1 Copy per 1 copy cycle.</td></tr>
<tr><td>1</td><td rowspan="2">Multiple count-up according to the paper size and copying mode.</td></tr>
<tr><td>2</td></tr>
</table></td></tr>
<tr><td>--2</td><td><Size Counter Count Mode>
Select the size of the paper to be counted by the Size Counter.
<table>
<tr><th>Setting</th><th>Description</th></tr>
<tr><td>0</td><td>Not Count</td></tr>
<tr><td>1</td><td>A3/Ledger</td></tr>
<tr><td>2</td><td>A3/B4/Legal/Ledger</td></tr>
<tr><td>3</td><td>A3/B4/Legal/Ledger/11×14/FLS</td></tr>
</table></td></tr>
<tr><td>--3</td><td><Key Counter>
Set to “1” if a Key Counter is plugged in.
<table>
<tr><th>Setting</th><th>Description</th></tr>
<tr><td>0</td><td>Plug-In Counter not plugged in</td></tr>
<tr><td>1</td><td>Plug-In Counter plugged in</td></tr>
</table>
NOTE
• If “0” is set, copies can be made without having to plug the Key Counter into the socket.</td></tr>
<tr><td>--4</td><td><Total Counter>
Set to “1“ if a Total Counter is plugged in.
<table>
<tr><th>Setting</th><th>Description</th></tr>
<tr><td>0</td><td>Mechanical Total Counter not installed</td></tr>
<tr><td>1</td><td>Mechanical Total Counter installed</td></tr>
</table></td></tr>
</table>

<Count-up Table>

Size Counter Count Mode	Size other than those set			Set size		
Total Counter Count Mode	0	1	2	0	1	2
Total Counter	1			1	2	2
Size Counter	Not Count			1	1	2

1: 1 count 2: 2counts

5. ADJUST MODE

• Used at the factory for making adjustments.

5-1. Settings in the Adjust Mode

Code No.	Description
--1	Printer CD Registration adjustment
--2	Printer FD Registration adjustment
--3	Scanner CD Zoom adjustment
--4	Scanner FD Zoom adjustment
--5	Scanner CD Registration adjustment
--6	Scanner FD Registration adjustment
--7	ADF FD Zoom adjustment
--8	ADF CD Registration adjustment
--9	ADF FD Registration adjustment
-10	ATDC Sensor Gain Manual adjustment
-11	———
-12	Test Print
-20	This test is for factory adjustment only and should NOT be used.

5-2. Adjust Mode Setting Procedure

<Procedure>
1. Set the machine into the Tech. Rep. Mode.
2. Press the following keys in this order:
   Stop → Start.
3. Enter the code number corresponding to the subfunction to be used.
   Code No.: 1 to 12 and 20
4. Press the Start key to display the current setting value.
5. Press the Clear key to clear the current setting value.
6. Enter the new setting value from the 10-Key Pad.
   If any value outside the available setting range is entered, the Display shows “Err” rejecting the entry. (The old setting value will reappear on the Display 1 sec. later.)
7. Press the Start key to validate the new setting value just entered.

<Exiting the Mode>
• Press the Panel Reset key until the initial screen reappears.

5-3. Setting in the Adjust Mode

<table>
<tr><th>Code No.</th><th>Setting (The default is Highlighted).</th></tr>
<tr><td>--1</td><td><Printer CD Registration adjustment>
Adjust registration in the CD direction on the printer (engine) side.
It is used when the PH Unit has been replaced.
<table><tr><td>Setting</td><td>60 ..... 100 ..... 140</td></tr><tr><td>Description (mm)</td><td>-4 ..... 0 ..... +4</td></tr></table></td></tr>
<tr><td>--2</td><td><Printer FD Registration adjustment>
Adjust registration in the FD direction on the printer (engine) side.
It is used when the PH Unit has been replaced.
<table><tr><td>Setting</td><td>67 ..... 100 ..... 133</td></tr><tr><td>Description (mm)</td><td>-6.14 ..... 0 ..... +6.14</td></tr></table></td></tr>
<tr><td>--3</td><td><Scanner CD Zoom adjustment>
Adjust the zoom ratio in the CD direction on the Scanner (IR) side.
It is used when the PH Unit or CCD Unit has been replaced.
<table><tr><td>Setting</td><td>97..... 100 ..... 103</td></tr><tr><td>Description (%)</td><td>-1.2 ..... 0 ..... +1.2</td></tr></table></td></tr>
<tr><td>--4</td><td><Scanner FD Zoom adjustment>
Adjust the zoom ratio in the FD direction on the Scanner (IR) side.
It is used when the PH Unit or the Scanner Drive Cables have been replaced, or when the Scanner has been removed.
<table><tr><td>Setting</td><td>97..... 100 ..... 103</td></tr><tr><td>Description (%)</td><td>-1.2 ..... 0 ..... +1.2</td></tr></table></td></tr>
<tr><td>--5</td><td><Scanner CD Registration adjustment>
Adjust registration in the CD direction on the Scanner (IR) side.
It is used when the PH Unit or CCD Unit has been replaced.
<table><tr><td>Setting</td><td>20 ..... 100 ..... 180</td></tr><tr><td>Description (mm)</td><td>-8 ..... 0 ..... +8</td></tr></table></td></tr>
<tr><td>--6</td><td><Scanner FD Registration adjustment>
Adjust registration in the FD direction on the Scanner (IR) side.
It is used when the PH Unit or the Scanner Drive Cables have been replaced, or when the Scanner has been removed.
<table><tr><td>Setting</td><td>60 ..... 100 ..... 140</td></tr><tr><td>Description (mm)</td><td>-4 ..... 0 ..... +4</td></tr></table></td></tr>
</table>

<table>
<tr><th>Code No.</th><th>Setting (The default is Highlighted).</th></tr>
<tr><td>--7</td><td><ADF FD Zoom adjustment>
Adjust the zoom ratio in the FD direction on the ADF side.
It is used when the machine is set up, the PH Unit or Scanner Drive Cables have been replaced, or the Scanner has been removed.
<table><tr><td>Setting</td><td>87 ..... 100 ..... 113</td></tr><tr><td>Description (%)</td><td>9.48 ..... 100 ..... 105.2</td></tr></table></td></tr>
<tr><td>--8</td><td><ADF CD Registration adjustment>
Adjust registration in the CD direction on the ADF side.
It is used when the machine is set up, or the PH Unit or CCD Unit has been replaced.
<table><tr><td>Setting</td><td>20 ..... 100 ..... 180</td></tr><tr><td>Description (mm)</td><td>-8.0 ..... 0 ..... +8.0</td></tr></table></td></tr>
<tr><td>--9</td><td><ADF FD Registration adjustment>
Adjust registration in the FD direction on the ADF side.
It is used when the PH Unit or Scanner Drive Cables have been replaced, or the Scanner has been removed.
<table><tr><td>Setting</td><td>50 ..... 100 ..... 150</td></tr><tr><td>Description (mm)</td><td>-5 ..... 0 ..... +5</td></tr></table></td></tr>
<tr><td>-10</td><td><ATDC Sensor Gain Manual adjustment>
Adjust the ATDC Sensor voltage.
It is used when an IU of another machine is to be used or the T/C control voltage is to be changed.
<table><tr><td>Setting</td><td>123 ..... 155 ..... 186</td></tr><tr><td>Description (V)</td><td>5.39 ..... 6.79 ..... 8.15</td></tr></table>✻ The value, to which F-8 (ATDC Sensor Automatic Adjustment) has been adjusted, is to be the setting value.</td></tr>
<tr><td>-11</td><td>Be sure to set to “1” whenever Memory Clear has been effected on the 18-cpm machine.
<table><tr><td>Setting</td><td>0</td><td>1</td></tr></table></td></tr>
<tr><td>-12</td><td><Test Print>
This function is used to produce a test print, when a check is made after a setting value of an Adjust function has been changed and on image.
<Procedure>
1. Select the paper source (Bypass Tray cannot be selected).
2. Press the Start key to let the machine produce a test print.</td></tr>
<tr><td>-20</td><td>✻ This test is for factory adjustment only and should NOT be used.</td></tr>
</table>

TROUBLESHOOTING

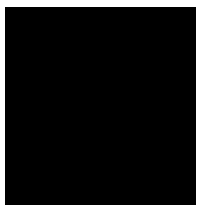

CONTENTS

1. INTRODUCTION T-1
1-1. Reading the Text T-1
2. PAPER TRANSPORT FAILURE T-2
2-1. Paper Misfeed Detection T-2
(1) Outline T-2
2-2. Paper Misfeed T-2
2-3. Misfeed Detection Sensor Layout T-4
2-4. Types of Misfeed Detection and Detection Timings T-6
3. MISFEED TROUBLESHOOTING PROCEDURES T-7
3-1. Misfeed at Copier Paper Take-Up J01 and Misfeed at Bypass Tray J06 T-7
3-2. Misfeed at Paper Feed Cabinet Paper Take-Up and Transport Section J02, J03, J04, J05, J1 (PF-120) T-11
3-3. Misfeed at PC Drum J2 ..... T-13
3-4. Misfeed at Fusing Unit J3 ..... T-16
4. MALFUNCTION T-18
4-1. Detection Timing by Malfunction Code T-18
4-2. Resetting Procedure by Malfunction Code T-22
4-3. Troubleshooting Procedures by Malfunction Code T-23
(1) C0000: Main Motor malfunction T-23
(2) C0045: Fusing Cooling Fan Motor malfunction T-24
(3) C004E: Power Supply Cooling Fan Motor malfunction T-25
(4) C0070: Toner Replenishing Motor malfunction T-26
(5) C0210: Abnormal image transfer voltage T-27
(6) C0500: Warm-up failure
C0510: Abnormally low fusing temperature
C0520: Abnormally high fusing temperature T-28
(7) C0650: Faulty Scanner Home Position Sensor T-30
(8) C0B60: Bin Switching Motor malfunction T-31
(9) C0B80 Shift Motor malfunction T-33
(10) C0F32: Faulty ATDC Sensor
C0F33: Improperly adjusted ATDC Sensor T-34
(11) C1038: Engine connection failure T-35
(12) C1200: Faulty ASIC/memory T-35
(13) C1300: Polygon Motor malfunction (startup failure, Lock signal failure, faulty Lock signal)
C13F0: Faulty HSYNC T-36
(14) C1468: Faulty EEPROM T-37
(15) C14A3: IR fluorescent lamp fault T-38
(16) The copier does not turn ON. T-40
5. IMAGE FAILURE T-42
5-1. Image Failure Troubleshooting T-42
5-2. Initial Checks T-42
5-3. Image Failure Samples T-44
5-4. Troubleshooting Procedures by Image Failure T-45
(1) Blank copy T-45
(2) Black copy T-46

(3) Low image density T-47
(4) Foggy background or rough image T-49
(5) Black streaks or bands T-51
(6) Black spots T-52
(7) Blank streaks or bands T-53
(8) Void areas T-54
(9) Smear on back T-55
(10) Uneven image density T-56
(11) Gradation reproduction failure T-58
(12) Periodically uneven image T-59
6. OTHER ERROR CODES T-60

1. INTRODUCTION

1-1. Reading the Text

1. The paper transport failure troubleshooting procedures are given according to the symptom. First identify the location where the paper is present and start the procedure for that particular location. For malfunction troubleshooting, start with step 1 and onward.
2. Make checks in the numerical order of steps and, if an item is checked okay, go to the next step.

<E.g.: Pattern 1>

Step	Check	Result	Action
1	—	NO	—
2			
			Go to the next step if you answered YES.

<E.g.: Pattern 2>

Step	Check	Result	Action
1	—	YES	—
		NO	—
2			
			Go to the next step if it checks okay.

2. PAPER TRANSPORT FAILURE

2-1. Paper Misfeed Detection

(1) Outline

- A paper misfeed is detected by detecting different states of signals (H, L) of several sensors located near the paper take-up section and the Exit Paper Sensor.
- The timings of the rising and falling edges of the paper take-up-related sensors and the Exit Paper Sensor are monitored to detect a misfeed of paper being fed through the copier.
- The states (H, L) of the paper take-up-related sensors and the Exit Paper Sensor are monitored to detect a sheet of paper left in the copier.
- All drives are brought to an immediate stop when a sheet of paper misfeed or left in the copier is detected.

2-2. Paper Misfeed

When a paper misfeed occurs, the control panel shows the misfeed location and paper location.

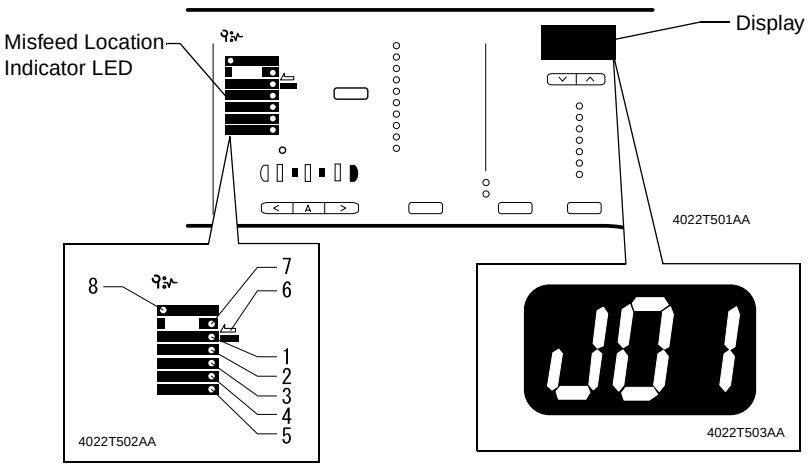

LED No.	Code	Misfeed/Paper Location	Action Ref. Page
1	J01	Misfeed at the 1st Tray	☞ T-7
2	J02	Misfeed at the 2nd Tray	☞ T-11
3	J03	Misfeed at the 3rd Tray	☞ T-11
4	J04	Misfeed at the 4th Tray	☞ T-11
5	J05	Misfeed at the 5th Tray	☞ T-11
6	J06	Misfeed at the Bypass Tray	☞ T-7

LED No.	Code	Misfeed/Paper Location	Action Ref. Page
2/3	J1	Misfeed on paper transport path between PC1 and PC12 (3rd Tray)	☞ T-11
3/4		Misfeed on paper transport path between PC12 (3rd Tray) and PC12 (4th Tray)	☞ T-11
4/5		Misfeed on paper transport path between PC12 (4th Tray) and PC12 (5th Tray)	☞ T-11
7	J2	Misfeed at the PC Drum	☞ T-13
7	J3	Misfeed at the Fusing Unit	☞ T-16
8	J80	Original misfeed: ADF Separator	See option service manual.
	J81	Original misfeed: ADF registration	
	J83	Original misfeed: ADF exit	
1/7	J – –	Paper left: PC1	☞ T-7
7		Paper left: PC3	☞ T-16
2		Paper left: 2nd Tray Paper Take-Up Sensor	☞ T-11
3		Paper left: 3rd Tray Paper Take-Up Sensor	☞ T-11
4		Paper left: 4th Tray Paper Take-Up Sensor	☞ T-11
5		Paper left: 5th Tray Paper Take-Up Sensor	☞ T-11
8		Paper left: ADF	See option service manual.
6	byp	Paper left: Manual Bypass Tray	☞ T-7

2-3. Misfeed Detection Sensor Layout

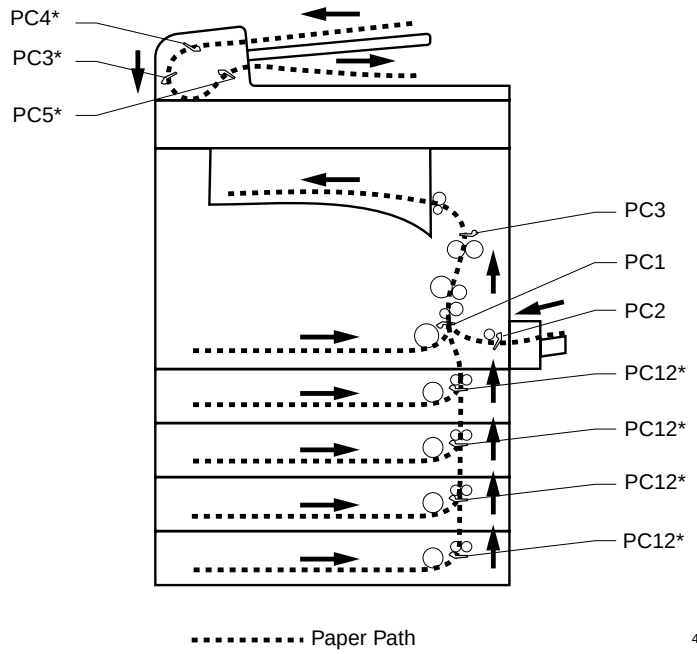

Copier

Symbol	Name
PC1	Synchronizing Roller Sensor
PC2	Manual Feed Paper Sensor
PC3	Exit Paper Sensor

Paper Feed Cabinet (option)

Symbol	Name
PC12*	2nd Tray Paper Take-Up Sensor
PC12*	3rd Tray Paper Take-Up Sensor
PC12*	4th Tray Paper Take-Up Sensor
PC12*	5th Tray Paper Take-Up Sensor

ADF (option)

Symbol	Name
PC3*	Registration Sensor
PC4*	Separator Sensor
PC5*	Paper Exit Sensor

<Resetting the Misfeed Display>

Misfeed Location		Resetting Procedure
Misfeed in the copier	Misfeed at 1st Tray J01, misfeed at Multiple Bypass Tray J06, misfeed at Manual Bypass Tray J06, misfeed at PC Drum J2, misfeed at Fusing Unit J3, paper left J - -	Open the Right Door or slide out the 1st Tray, remove all sheets of paper misfeed and left inside, and close the Right Door.
	Paper wedged at Manual Bypass Tray byp	Pull the paper wedged out of the tray. (Removing the paper will reset the misfeed display.)
Misfeed in the option: J02, J03, J04, J05, J1, J80, J81, and J83		Remove all sheets of paper misfeed and left inside and then raise and lower or disconnect and reconnect the option.

2-4. Types of Misfeed Detection and Detection Timings

- The following list the types of misfeed detection and detection timings for different misfeed locations.
- The symbol “L” (for the leading edge) and “T” (for the trailing edge) given in ( ) indicate the particular edge of the paper detected by the sensor.

NOTE

- *For the types of misfeed detection and detection timings of options, see the relevant option service manual.*

<Misfeed at the Paper Take-Up Section>

Type	Detection Start	Paper Detection
Misfeed at 1st Tray J01	Paper Take-Up Solenoid (SL1) energized	Synchronizing Roller Sensor (PC1) (L)
Misfeed at Manual Bypass Tray J06	Manual Bypass Solenoid (SL2) energized	Synchronizing Roller Sensor (PC1) (L)
Misfeed at Multiple Bypass Tray J06	Multiple Bypass Solenoid (SL21) energized	Synchronizing Roller Sensor (PC1) (L)

<Misfeed at the PC Drum>

Type	Detection Start	Paper Detection
Misfeed at PC Drum J2	Synchronizing Roller Sensor (PC1) (L)	Exit Paper Sensor (PC3) (L)
	Synchronizing Roller Sensor (PC1) (L)	Synchronizing Roller Sensor (PC1) (T)

<Misfeed at the Fusing Unit>

Type	Detection Start	Paper Detection
Misfeed at Fusing Unit J3	Synchronizing Roller Sensor (PC1) (T)	Exit Paper Sensor (PC3) (T)

3. MISFEED TROUBLESHOOTING PROCEDURES

3-1. Misfeed at Copier Paper Take-Up J01 and Misfeed at Bypass Tray J06

Relevant Electrical Parts	
Synchronizing Roller Sensor (PC1) Manual Feed Paper Sensor (PC2) Paper Take-Up Solenoid (SL1)	Manual Bypass Solenoid (SL2) Multiple Bypass Solenoid (SL21) Master Board (PWB-A)

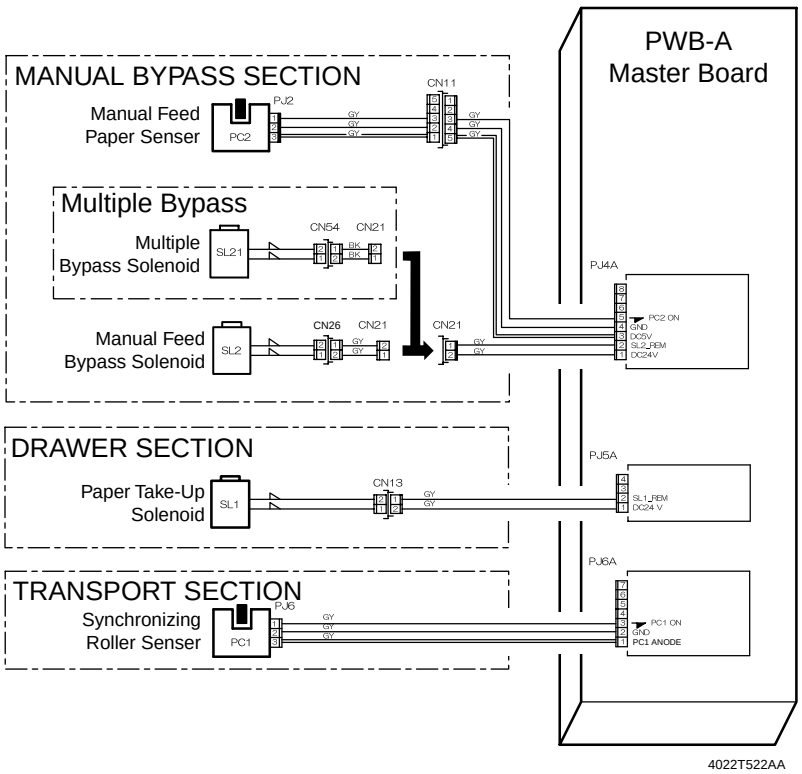

4022T522AA

Misfeed at 1st Tray J01 Troubleshooting Procedures

Step	Check	Result	Action
1	Paper meets product specifications.	NO	• Change paper.
2	Paper is curled, wavy, or damp.	YES	• Change paper. • Instruct user to load paper that meets product specifications.
3	Edge Guide and Trailing Edge Stop are at correct position to accommodate paper.	NO	• Adjust as necessary.

Step	Check	Result	Action
4	Paper Take-Up Roll (1st Tray) is dirty, scratchy, deformed, or worn.	YES	• Clean or change.
5	Paper Separator Roll (1st Tray) is dirty, scratchy, deformed, or worn.	YES	• Clean or change.
6	Paper Take-Up Roll drive shaft turns when the Start key is pressed.	NO	• Reinstall the Paper Take-Up Roll drive shaft. • Reinstall the Paper Take-Up Roll drive gear and spring.
7	Paper Take-Up Solenoid (SL1) is operational when the Start key is pressed. <Check Procedure> Check voltage across a Master Board (copier: PWB-A) pin and GND. • Voltage across PJ5A-2 and GND In standby: DC24 V When pressed: DC0 V	NO	• Change Paper Take-Up Solenoid (SL1).
8	Synchronizing Roller Sensor (PC1) is operational. <Check Procedure> Check voltage across a Master Board (copier: PWB-A) pin and GND when the sensor is blocked. • Voltage across PJ6A-3 and GND When blocked: DC5 V When unblocked: DC0 V	NO	• Change Synchronizing Roller Sensor (PC1).
		YES	• Change Master Board (copier: PWB-A).

Misfeed at Manual Bypass Tray J06 Troubleshooting Procedures

Step	Check	Result	Action
1	Paper meets product specifications.	NO	• Change paper.
2	Paper is curled, wavy, or damp.	YES	• Change paper. • Instruct user to load paper that meets product specifications.
3	Paper Guides are at correct position to accommodate paper.	NO	• Adjust as necessary.
4	Transport Roller (Manual Bypass Tray) is dirty, scratchy, deformed, or worn.	YES	• Clean or change.

Step	Check	Result	Action
5	Manual Bypass Solenoid (SL2) is operational when the Start key is pressed. <Check Procedure> Check voltage across a Master Board (copier: PWB-A) pin and GND. • Voltage across PJ4A-2 and GND In standby: DC24 V When pressed: DC0 V	NO	• Change Manual Bypass Solenoid (SL2).
6	Manual Feed Paper Sensor (PC2) is operational. <Check Procedure> Check voltage across a Master Board (copier: PWB-A) pin and GND when the sensor is blocked. • Voltage across PJ4A-5 and GND When unblocked: DC5 V When blocked: DC0 V	NO	• Change Manual Feed Paper Sensor (PC2).
7	Synchronizing Roller Sensor (PC1) is operational. <Check Procedure> Check voltage across a Master Board (copier: PWB-A) pin and GND when the sensor is blocked. • Voltage across PJ6A-3 and GND When blocked: DC5 V When unblocked: DC0 V	NO	• Change Synchronizing Roller Sensor (PC1).
		YES	• Change Master Board (copier: PWB-A).

Misfeed at Multiple Bypass Tray J06 Troubleshooting Procedures

Step	Check	Result	Action
1	Paper meets product specifications.	NO	• Change paper.
2	Paper is curled, wavy, or damp.	YES	• Change paper. • Instruct user to load paper that meets product specifications.
3	Paper Guides are at correct position to accommodate paper.	NO	• Adjust as necessary.
4	• Paper Take-Up Roll drive shaft (Multiple Bypass Tray) turns when the Start key is pressed.	NO	• Reinstall.

Step	Check	Result	Action
5	Multiple Bypass Solenoid (SL21) is operational when the Start key is pressed. <Check Procedure> Check voltage across a Master Board (copier: PWB-A) pin and GND. • Voltage across PJ4A-2 and GND In standby: DC24 V When pressed: DC0 V	NO	• Change Multiple Bypass Solenoid (SL21).
6	Paper Take-Up Roll (Multiple Bypass Tray) is dirty, scratchy, deformed, or worn.	YES	• Clean or change.
7	Separator Roll (Multiple Bypass Tray) is dirty, scratchy, deformed, or worn.	YES	• Clean or change.
8	Synchronizing Roller Sensor (PC1) is operational. <Check Procedure> Check voltage across a Master Board (copier: PWB-A) pin and GND when the sensor is blocked. • Voltage across PJ6A-3 and GND When unblocked: DC5 V When blocked: DC0 V	NO	• Change Synchronizing Roller Sensor (PC1).
		YES	• Change Master Board (copier: PWB-A).

3-2. Misfeed at Paper Feed Cabinet Paper Take-Up and Transport Section J02, J03, J04, J05, J1 (PF-120)

Relevant Electrical Parts	
Paper Take-Up Solenoid (SL11) Synchronizing Roller Sensor (PC1) Paper Take-Up Sensor (PC12)	Master Board (PWB-A) Control Board (PWB-A): PF-120

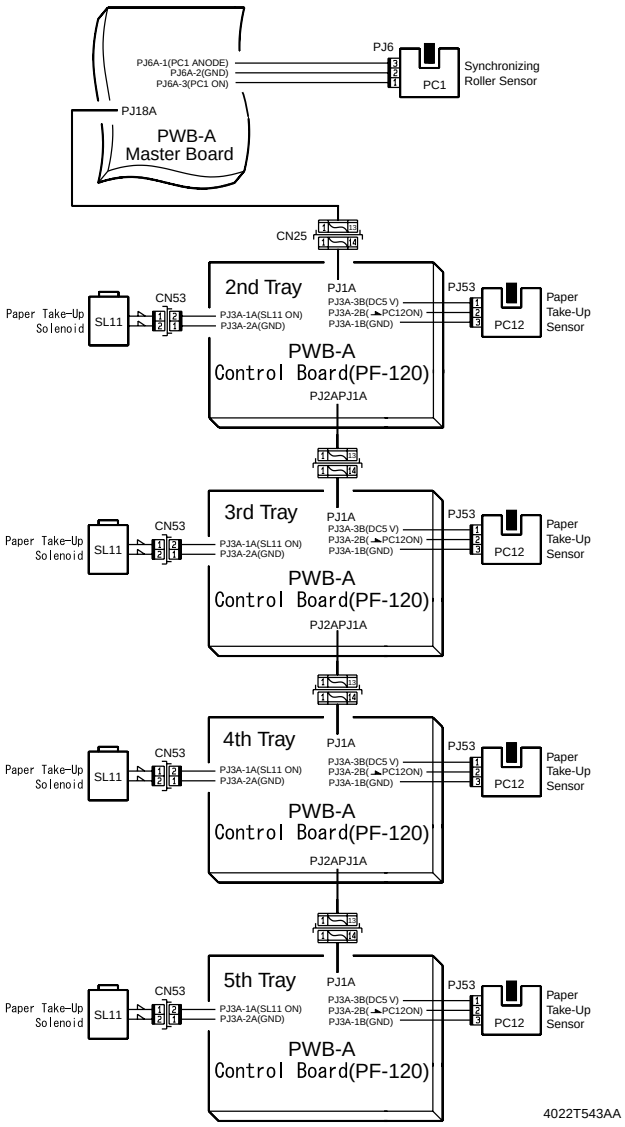

Misfeed at Paper Feed Cabinet Paper Take-Up and Transport Section J02, J03, J04, J05, J1 (PF-120) Troubleshooting Procedures

- Paper is not taken up at all.

Step	Check	Result	Action
1	Paper meets product specifications.	NO	• Change paper.
2	Paper is curled, wavy, or damp.	YES	• Change paper. • Instruct user to load paper that meets product specifications.
3	Edge Guides and Trailing Edge Stop are at correct position to accommodate paper.	NO	• Adjust position as necessary.
4	Paper Take-Up Roll is dirty, scratchy, deformed, or worn.	YES	• Clean or change.
5	Mylar is dirty, scratchy, or deformed.	YES	• Clean or change.
6	Separator Fingers are dirty or deformed.	YES	• Clean or change.
7	Paper guide plate is dirty or deformed.	YES	• Clean or change.
8	Paper Take-Up Solenoid (SL11) operation check: The voltage across PJ3A-1A on Control Board (PF-120: PWB-A) and GND changes from DC0 V to DC24 V when the Start key is pressed.	YES	• Change Paper Take-Up Solenoid (SL11).
		NO	• Change Control Board (PF-120: PWB-A).
9	Paper Take-Up Sensor (PC12) operation check: The voltage across PJ3A-2 on Control Board (PF-120: PWB-A) and GND is DC 5 V when the sensor is unblocked and DC 0 V when the sensor is blocked.	YES	• Change Control Board (PF-120: PWB-A) and/or Master Board (copier: PWB-A).
		NO	• Correct actuator and/or change Paper Take-Up Sensor (PC12).

- Paper is at a stop near the vertical transport section or Synchronizing Roller.

Step	Check	Result	Action
1	Vertical Transport Roller/Rolls are dirty, deformed, or worn.	YES	• Clean or change.
2	Paper is curled, wavy, or damp.	YES	• Change paper. • Instruct user to load paper that meets product specifications.
3	Synchronizing Roller Sensor (PC1) operation check: The voltage across PJ6A-3 on Master Board (copier: PWB-A) and GND is DC5 V when the sensor is blocked and DC0 V when the sensor is unblocked.	YES	• Change Master Board (copier: PWB-A).
		NO	• Correct actuator and/or change Synchronizing Roller Sensor (PC1).

3-3. Misfeed at PC Drum J2

Relevant Electrical Parts	
Synchronizing Roller Sensor (PC1) Fusing Cooling Fan Motor (M3)	Synchronizing Roller Clutch (CL1) Master Board (PWB-A)

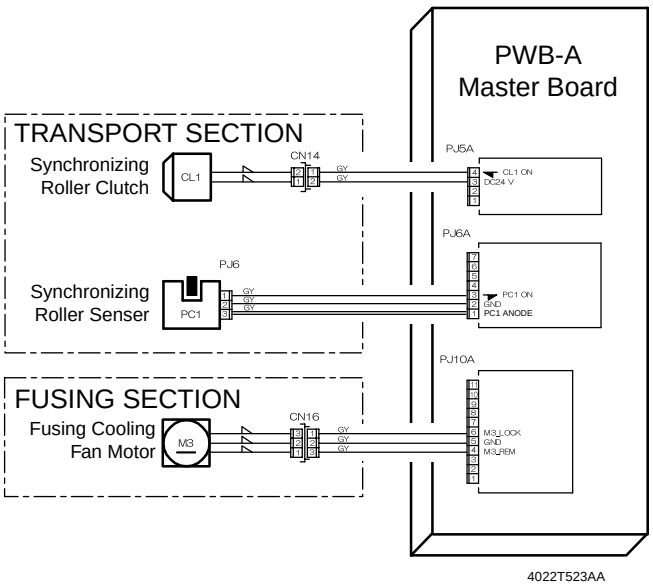

Misfeed at PC Drum J2 Troubleshooting Procedures
- Paper is at a stop at the Synchronizing Roller.

Step	Check	Result	Action
1	Synchronizing Rollers are dirty, scratchy, deformed, or worn.	YES	• Clean or change the Synchronizing Rollers. • Clean or change the Paper Dust Remover.
2	Loop length is set to an appropriate value.	NO	• Adjust loop length using Tech. Rep. Choice. • For details, see DIS/REASSEMBLY, ADJUSTMENT.

Step	Check	Result	Action
3	Synchronizing Roller Sensor (PC1) is operational. <Check Procedure> Check voltage across a Master Board (copier: PWB-A) pin and GND when the sensor is blocked. • Voltage across PJ6A-3 and GND When blocked: DC5 V When unblocked: DC0 V	NO	• Change Synchronizing Roller Sensor (PC1).
4	The following voltage is supplied to the Synchronizing Roller Clutch (CL1). <Check Procedure> Check voltage across a Master Board (copier: PWB-A) pin and GND when the Start key is pressed. • Voltage across PJ5A-4 and GND In standby: DC24 V When pressed: DC0 V	YES	• Change Synchronizing Roller Clutch (CL1).
		NO	• Change Master Board (copier: PWB-A).

• Paper is at a stop at the PC Drum.

Step	Check	Result	Action
1	Image Transfer Roller is dirty.	YES	• Clean or change.
2	PC Drum Paper Separator Fingers are dirty, scratchy, deformed, worn, or damaged.	YES	• Clean or change.
3	Charge Neutralizing Plate is dirty, scratched, broken, or bent.	YES	• Clean, correct, or change.

• Paper is at a stop at the transport section.

Step	Check	Result	Action
1	Transport guide plate is dirty, scratchy, deformed, worn, or damaged.	YES	• Clean or change.
2	The following voltage is supplied to the Fusing Cooling Fan Motor (M3). <Check Procedure> Check voltage across a Master Board (copier: PWB-A) pin and GND when the Start key is pressed. • Voltage across PJ10A-4 and GND During decelerated rotation: DC8 V During full speed rotation: DC24 V	YES	• Change Fusing Cooling Fan Motor (M3).
		NO	• Change Master Board (copier: PWB-A).

3-4. Misfeed at Fusing Unit J3

Relevant Electrical Parts	
Exit Paper Sensor (PC3) Fusing Cooling Fan Motor (M3)	Master Board (PWB-A)

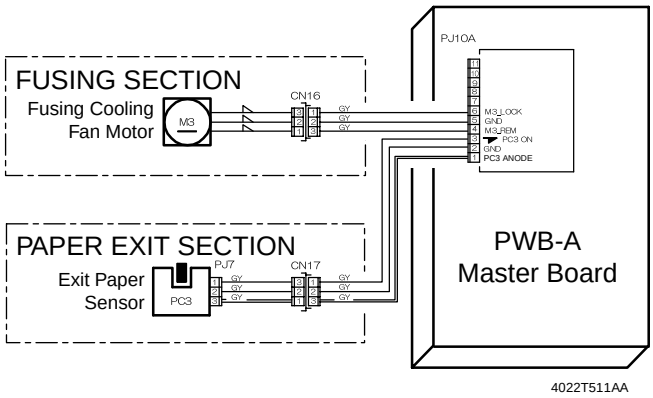

Misfeed at Fusing Unit J3 Troubleshooting Procedures

- Paper is at a stop at the Fusing Unit.

Step	Check	Result	Action
1	Fusing guide plate is dirty, scratchy, deformed, worn, or damaged.	YES	• Clean or change.
2	Fusing Paper Separator Fingers are dirty, scratchy, deformed, or worn.	YES	• Clean or change the Fusing Paper Separator Fingers, or change spring.
3	Fusing Rollers are dirty, scratchy, deformed, or worn.	YES	• Clean or change.

- Paper is at a stop at the paper exit section.

Step	Check	Result	Action
1	Exit guide plate is dirty, scratchy, deformed, worn, or damaged.	YES	• Clean or change.
2	Transport Roller is dirty, scratchy, deformed, or worn.	YES	• Clean or change.
3	Exit Roller/Rolls are dirty, scratchy, deformed, or worn.	YES	• Clean or change.

Step	Check	Result	Action
4	Exit Paper Sensor (PC3) is operational. <Check Procedure> Check voltage across a Master Board (copier: PWB-A) pin and GND when the sensor is blocked. • Voltage across PJ10A-3 and GND When blocked: DC5 V When unblocked: DC0 V	NO	• Change Exit Paper Sensor (PC3).
		YES	• Change Master Board (copier: PWB-A).

4. MALFUNCTION

The copier's CPU is equipped with a self-diagnostics function that, on detecting a malfunction, gives the corresponding malfunction code on the Display.

4-1. Detection Timing by Malfunction Code

Code	Description	Detection Timing
C0000	Main Motor malfunction	• The Main Motor (M1) Lock signal remains HIGH for a continuous 1-sec. period at any time 1 sec. after the Main Motor has started turning.
C0045	Fusing Cooling Fan Motor malfunction	• The Fusing Cooling Fan Motor (M3) Lock signal remains HIGH for a continuous 1-sec. period while the Fusing Cooling Fan Motor is turning at full speed or decelerated speed.
C004E	Power Supply Cooling Fan Motor malfunction	• The Power Supply Cooling Fan Motor (M4) Lock signal remains HIGH for a continuous 1-sec. period while the Power Supply Cooling Fan Motor Remote signal remains ON (for full-speed rotation) or OFF (for decelerated-speed rotation).
C0070	Toner Replenishing Motor malfunction	• The Toner Bottle Home Position Sensor (PC7) outputs a HIGH signal for a continuous 3.5-sec. period while the Toner Bottle is turning. • The Toner Bottle Home Position Sensor (PC7) outputs a LOW signal for a continuous 2-sec. period while the Toner Bottle is turning.
C0210	Abnormal image transfer voltage	• The image transfer voltage remains more than 100 V for a continuous given period of time while the PC Drum remains stationary.
C03FF	Improperly set Adjust Mode 11	• An incorrect setting is made of Adjust 11.
C0500	Warm-up failure	• It takes the surface temperature of the Left Fusing Roller more than 35 sec. to reach 100 °C since the start of a warm-up cycle. • It takes the surface temperature of the Left Fusing Roller more than 25 sec. to reach 140 °C after it has reached 100 °C. • It takes more than 20 sec. for the warm-up cycle to be completed after the surface temperature of the Left Fusing Roller has reached 140 °C.
C0510	Abnormally low fusing temperature	• The surface temperature of the Left Fusing Roller remains lower than 120 °C for a given period of time while the copier is in a standby state. • The surface temperature of the Left Fusing Roller remains lower than 120 °C for a given period of time during a print cycle.
C0520	Abnormally high fusing temperature	The surface temperature of the Left Fusing Roller remains higher than 240 °C for a given period of time.

Code	Description	Detection Timing
C0650	Faulty Scanner Home Position Sensor	• The Scanner Home Position Sensor (PC6) does not go from HIGH to LOW when the Scanner Motor (M5) is energized for a given number of steps after the sequence to bring the Scanner back to its home position has been started at the end of a scan motion and during re-shading. • The Scanner Home Position Sensor (PC6) does not go from LOW to HIGH when the Scanner Motor (M5) is energized for a given number of steps after a scan motion has been started at the end of a Scanner Home Position Sensor home check scan motion and during re-shading.
C0B60	Bin Switching Motor malfunction	If the Upper Home Position Sensor is LOW during an initial operation: • The Lower Home Position Sensor (PC33) is LOW when the Bin Switching Motor (M1) starts turning forward. • If the Lower Home Position Sensor (PC33) does not go LOW at a time 2.5 sec. after the Bin Switching Motor (M1) has started turning forward, the Bin Switching Motor is kept deenergized for a given period of time and then energized again to turn backward. The Upper Home Position Sensor (PC32) does not go LOW after the motor has started turning backward. • The Upper Home Position Sensor (PC32) does not go HIGH at a time 1 sec. after the Bin Switching Motor (M1) has started turning forward. • When the Lower Home Position Sensor (PC33) goes LOW, the Bin Switching Motor (M1) starts turning backward. The Upper Home Position Sensor (PC32) does not go LOW at a time 2.5 sec. after the motor has started turning backward. • When the Lower Home Position Sensor (PC33) goes LOW, the Bin Switching Motor (M1) starts turning backward. The Lower Home Position Sensor (PC33) does not go HIGH at a time 1 sec. after the motor has started turning backward.
		If the Lower Home Position Sensor is LOW during an initial operation: • The Upper Home Position Sensor (PC32) does not go LOW at a time 2.5 sec. after the Bin Switching Motor (M1) has started turning backward. • The Lower Home Position Sensor (PC33) does not go HIGH at a time 1 sec. after the Bin Switching Motor (M1) has started turning backward.

Code	Description	Detection Timing
C0B60	Bin Switching Motor malfunction	If both the Upper Home Position Sensor and the Lower Home Position Sensor are HIGH during an initial operation: • If the Lower Home Position Sensor (PC33) does not go LOW at a time 2.5 sec. after the Bin Switching Motor (M1) has started turning forward, the Bin Switching Motor is kept deenergized for a given period of time and then energized again to turn backward. The Upper Home Position Sensor (PC32) does not go LOW after the motor has started turning backward. • When the Lower Home Position Sensor (PC33) goes LOW, the Bin Switching Motor (M1) starts turning backward. The Upper Home Position Sensor (PC32) does not go LOW at a time 2.5 sec. after the motor has started turning backward. • When the Lower Home Position Sensor (PC33) goes LOW, the Bin Switching Motor (M1) starts turning backward. The Lower Home Position Sensor (PC33) does not go HIGH at a time 1 sec. after the motor has started turning backward.
C0B80	Shift Motor malfunction	• The Home Sensor (S31) is LOW at a timing immediately before the Shift Motor (M1) starts turning backward. • The Home Sensor (S31) is LOW after the lapse of a given period of time after the Shift Motor (M1) has started turning backward.
C0F32	Faulty ATDC Sensor	• The measurement taken by the ATDC Sensor (UN1) at a time 2.5 sec. after the Main Motor (M1) has started turning is less than 3 % (greater than 4.98 V). • The measurement taken by the ATDC Sensor (UN1) at a time 2.5 sec. after the Main Motor (M1) has started turning is 19 % or more (1.41 V or less).
C0F33	Improperly adjusted ATDC Sensor	• The adjustment of the ATDC control voltage is not completed within 1 sec. after sampling has started of the ATDC Sensor (UN1) as part of an operation of ATDC Sensor Automatic Adjustment. • The ATDC Sensor control voltage falls outside the range of 5.39 V to 8.15 V during an operation of ATDC Sensor Automatic Adjustment.
C1038	Engine connection failure	Master Board (PWB-A) to Control Board (PWB-C) connection failure • There is no acknowledge signal transmitted from the Master Board (PWB-A) to Control Board (PWB-C) for 1.5 sec. or more. • An error command signal is transmitted from the Control Board (PWB-C) to Master Board (PWB-A). • An error status signal is transmitted from the Master Board (PWB-A) to Control Board (PWB-C).

Code	Description	Detection Timing
C1200	Faulty ASIC/memory	ASIC/memory (for image and control) fault • A write or read error occurs with SRAM on the Control Board (PWB-C).
C1300	Polygon Motor mal-function	Startup failure • A LOW Polygon Motor (M2) Lock signal is not detected within a given period of time that begins 1 sec. after the Polygon Motor has started turning.
		Lock signal fault: Unstable after the first Lock signal has been detected • For a period of 1 sec. after the first LOW Polygon Motor (M2) Lock signal (first Lock) has been detected, the next LOW Polygon Motor Lock signal is not detected.
		Lock signal fault: Lock signal out-of-timing • A LOW Polygon Motor (M2) Lock signal is not detected for a continuous given period of time while the rotation of the Polygon Motor remains stabilized.
		Faulty Lock signal • A LOW Polygon Motor (M2) Lock signal is detected for a given period of time or more when the Polygon Motor remains deenergized.
C13F0	Faulty HSYNC	Laser scanning system malfunction • The SOS Sensor does not detect a rising edge of SOS within a given period of time after the Polygon Motor (M2) has started turning and a laser output has been started. • The SOS Sensor detects no rising edges of SOS while VIA (image area control) is ON.
C1468	Faulty EEPROM	EEPROM fault • Data cannot be written in EEPROM. • Data stored in EEPROM is wrong.
C14A3	IR fluorescent lamp fault	The Exposure Lamp (LA2) of the Scanner fails to turn ON. • The intensity of the Exposure Lamp is a predeter-mined value or less during shading and re-shading.

4-2. Resetting Procedure by Malfunction Code

Code	Description	Resetting Procedure
C0000	Main Motor malfunction	• Turn OFF and ON the Power Switch.
C0045	Fusing Cooling Fan Motor malfunction	
C004E	Power Supply Cooling Fan Motor malfunction	
C0070	Toner Replenishing Motor malfunction	
C0210	Abnormal image transfer voltage	
C03FF	Improperly set Adjust Mode 11	• Set Adjust Mode 11 correctly and then turn OFF and ON the Power Switch. • For details, see SWITCHES ON PWBs/ TECH. REP. SETTINGS.
C0500	Warm-up failure	• Turn ON the Power Switch with the Stop key held down.
C0510	Abnormally low fusing temperature	
C0520	Abnormally high fusing temperature	
C0650	Faulty Scanner Home Position Sensor	• Turn OFF and ON the Power Switch.
C0B60	Bin Switching Motor malfunction	
C0F32	Faulty ATDC Sensor	
C0F33	Improperly adjusted ATDC Sensor	
C1038	Engine connection failure	
C1200	Faulty ASIC/memory	
C1300	Polygon Motor malfunction	
C13F0	Faulty HSYNC	
C1468	Faulty EEPROM	
C14A3	IR fluorescent lamp fault	

4-3. Troubleshooting Procedures by Malfunction Code

(1) C0000: Main Motor malfunction

Relevant Electrical Parts	
Main Motor (M1)	Master Board (copier: PWB-A)

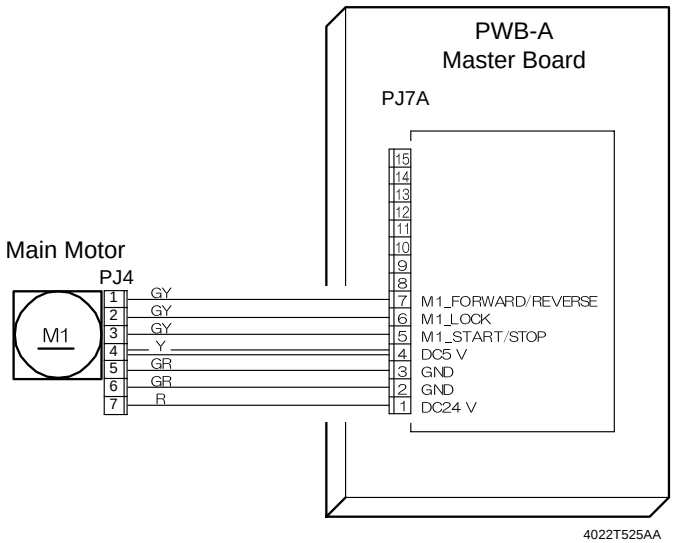

Step	Check	Result	Action
1	Main Motor (M1) turns when the Start key is pressed.	NO	• Check for overload.
2	The following voltage is supplied to the Main Motor (M1) when the Start key is pressed. Check voltage across a Master Board (copier: PWB-A) pin and GND when the Start key is pressed. • Voltage across PJ7A-6 and GND DC5 V when Main Motor (M1) is in standby state DC0 V when Main Motor (M1) is energized • Voltage across PJ7A-5 and GND DC5 V when Main Motor (M1) is in standby state DC0 V when Main Motor (M1) is energized	NO	• Change Main Motor (M1).
		YES	• Change Master Board (copier: PWB-A).

(2) C0045: Fusing Cooling Fan Motor malfunction

Relevant Electrical Parts	
Fusing Cooling Fan Motor (M3)	Master Board (copier: PWB-A)

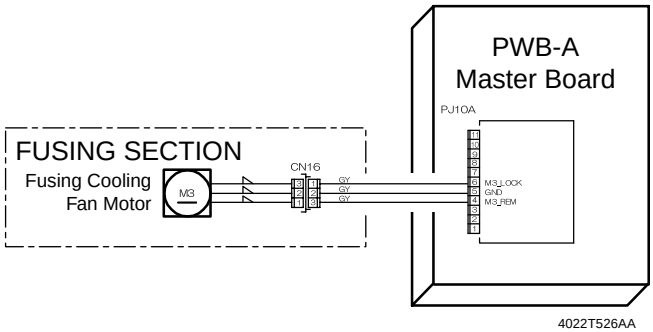

Step	Check	Result	Action
1	Fusing Cooling Fan Motor (M3) turns when the Power Switch is turned ON.	NO	• Check for overload.
2	The following voltage is supplied to the Fusing Cooling Fan Motor (M3). <Check Procedure> Check voltage across a Master Board (copier: PWB-A) pin and GND when the Power Switch is turned ON. • Voltage across PJ10A-4 and GND DC8 V during rotation at decelerated speed DC24 V during rotation at full speed	YES	• Change Fusing Cooling Fan Motor (M3).
3	The following voltage is supplied to the Fusing Cooling Fan Motor (M3). <Check Procedure> Check voltage across a Master Board (copier: PWB-A) pin and GND when the Power Switch is turned ON. • Voltage across PJ10A-6 and GND DC0 V when energized	NO	• Change Fusing Cooling Fan Motor (M3).
		YES	• Change Master Board (copier: PWB-A).

(3) C004E: Power Supply Cooling Fan Motor malfunction

Relevant Electrical Parts	
Power Supply Cooling Fan Motor (M4)	Master Board (copier: PWB-A)

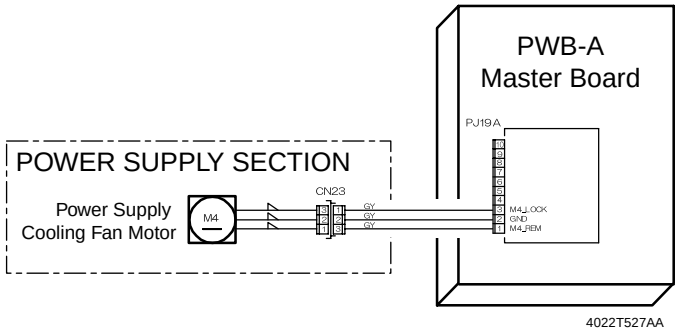

4022T527AA

Step	Check	Result	Action
1	Power Supply Cooling Fan Motor (M4) turns when the Power Switch is turned ON.	NO	• Check for overload.
2	The following voltage is supplied to the Power Supply Cooling Fan Motor (M4). <Check Procedure> Check voltage across a Master Board (copier: PWB-A) pin and GND when the Power Switch is turned ON. • Voltage across PJ19A-1 and GND DC8 V during rotation at decelerated speed DC24 V during rotation at full speed	YES	• Change Power Supply Cooling Fan Motor (M4).
3	The following voltage is supplied to the Power Supply Cooling Fan Motor (M4). <Check Procedure> Check voltage across a Master Board (copier: PWB-A) pin and GND when the Power Switch is turned ON. • Voltage across PJ19A-3 and GND DC0 V when energized	NO	• Change Power Supply Cooling Fan Motor (M4).
		YES	• Change Master Board (copier: PWB-A).

(4) C0070: Toner Replenishing Motor malfunction

Relevant Electrical Parts	
Toner Replenishing Motor (M6) Toner Bottle Home Position Sensor (PC7)	Master Board (copier: PWB-A)

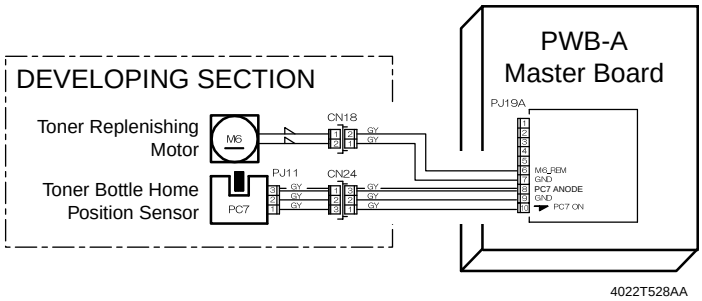

4022T528AA

Step	Check	Result	Action
1	The coupling of the Toner Hopper turns as the Toner Replenishing Motor (M6) turns. <Check Procedure> • Disengage the Toner Bottle Release Lever. • Turn the Toner Bottle a half turn by hand. • Turn ON the Power Switch.	NO	• Check for overload.
2	The Toner Bottle Home Position Sensor (PC7) is operational. <Check Procedure> Check voltage across a Master Board (copier: PWB-A) pin and GND when the Toner Replenishing Motor (M6) turns. • Voltage across PJ19A-10 and GND DC0 V when unblocked DC5 V when blocked	NO	• Change Toner Bottle Home Position Sensor (PC7).
3	The following voltage is supplied to the Toner Replenishing Motor (M6). <Check Procedure> Check voltage across a Master Board (copier: PWB-A) pin and GND when the Toner Replenishing Motor (M6) turns. • Voltage across PJ19A-6 and GND DC0 V when deenergized DC24 V when energized	YES	• Change Toner Replenishing Motor (M6).
		NO	• Change Master Board (copier: PWB-A).

(5) C0210: Abnormal image transfer voltage

Relevant Electrical Parts	
High Voltage Unit (HV1)	Master Board (copier: PWB-A)

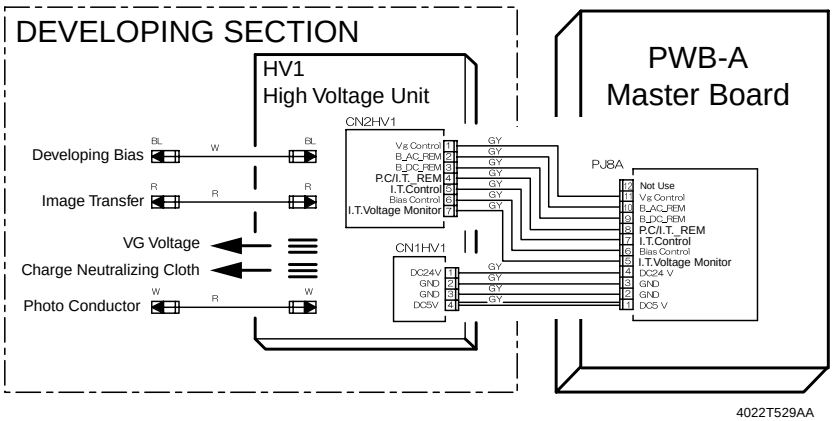

Step	Check	Result	Action
1	• C0210 reappears when the Power Switch is turned OFF and ON.	YES	• Change High Voltage Unit (HV1). • Change Master Board (PWB-A).

(6) C0500: Warm-up failure

C0510: Abnormally low fusing temperature

C0520: Abnormally high fusing temperature

Relevant Electrical Parts	
Fusing Heater Lamp (H1) Thermistor (TH1) Thermoswitch 1 (TS1)	Fusing Unit Interlock Switch (S2) DC Power Supply (PU1) Master Board (copier: PWB-A)

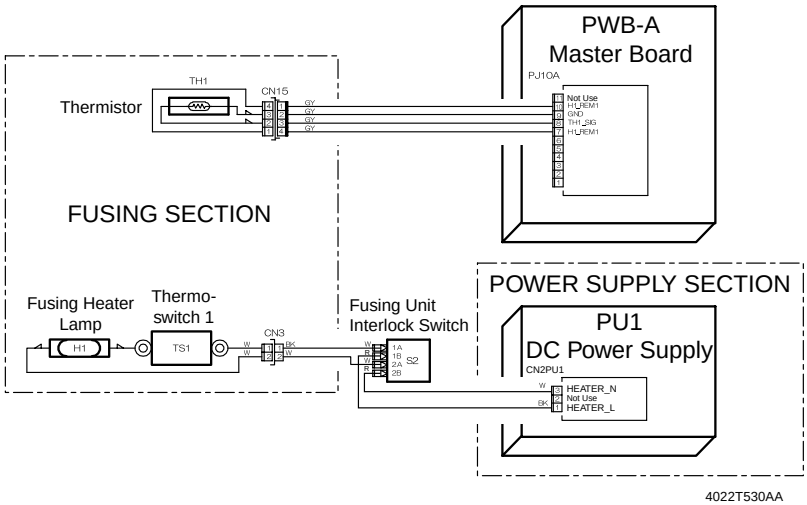

C0500: Warm-up failure; C0510: Abnormally low fusing temperature

Step	Check	Result	Action
1	• Fusing Heater Lamp (H1) turns ON.	YES	• Go to step 3.
		NO	• Go to step 2.
2	Fusing Heater Lamp (H1) is open-circuited. <Check Procedure> Check the resistance across both ends of the Fusing Heater Lamp (H1). The Fusing Heater Lamp is open-circuited if the resistance is infinity.	YES	• Change Fusing Heater Lamp (H1).
3	Thermoswitch 1 (TS1) is operational. <Check Procedure> Check the resistance across both ends of the Thermoswitch 1 (TS1). The Thermoswitch 1 is open-circuited if the resistance is infinity.	NO	• Change Thermoswitch 1 (TS1).

Step	Check	Result	Action
4	Fusing Unit Interlock Switch (S2) is operational. <Check Procedure> Check continuity across terminals when the Fusing Unit Interlock Switch (S2) is turned ON. • Across S2-1A and S2-1B • Across S2-2A and S2-2B	NO	• Change Fusing Unit Interlock Switch (S2).
		YES	• Change DC Power Supply (PU1).
5	Thermistor (TH1) is open-circuited. <Check Procedure> Check the resistance across CN15-2 and CN15-3 on the Fusing Unit side with CN15 disconnected. The Thermistor is open-circuited if the resistance is infinity.	YES	• Change Thermistor (TH1).
6	The following voltages are supplied from the Master Board (copier: PWB-A). <Check Procedure> Check voltage across a Master Board (copier: PWB-A) pin and GND when the Power Switch is turned ON. • Voltage across PJ10A-7 and GND DC24 V when Fusing Heater Lamp (H1) is OFF DC0 V when Fusing Heater Lamp (H1) is ON • Voltage across PJ10A-10 and GND DC24 V when Fusing Heater Lamp (H1) is OFF DC0 V when Fusing Heater Lamp (H1) is ON	NO	• Change Master Board (copier: PWB-A).

C0520: Abnormally high fusing temperature

Step	Check	Result	Action
1	Thermistor (TH1) is dirty.	YES	• Clean Thermistor (TH1).
2	Thermistor (TH1) is open-circuited. <Check Procedure> Check the resistance across CN15-2 and CN15-3 on the Fusing Unit side with CN15 disconnected. The Thermistor is open-circuited if the resistance is infinity.	YES	• Change Thermistor (TH1).
		NO	• Change Master Board (copier: PWB-A).

(7) C0650: Faulty Scanner Home Position Sensor

Relevant Electrical Parts	
Scanner Motor (M5) Scanner Home Position Sensor (PC6)	Control Board (copier: PWB-C)

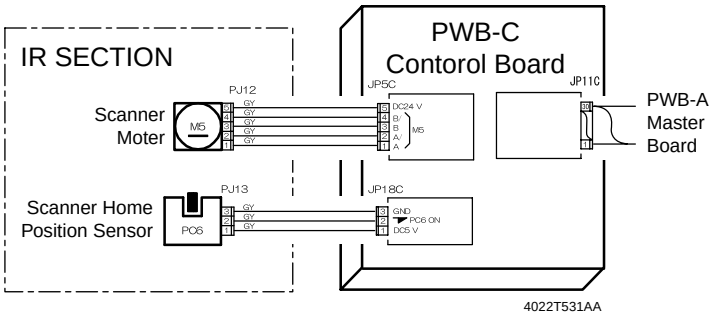

Step	Check	Result	Action
1	Scanner Motor (M5) turns when the Power Switch is turned ON.	NO	• Change Scanner Motor (M5).
2	Scanner moves smoothly. <Check Procedure> Gently move the Scanner by hand to check for smooth operation.	NO	• Remove foreign matter and other obstacle. • Clean the Scanner rails. • Clean or change the Scanner bushings. • Reinstall Scanner.
3	Scanner Home Position Sensor (PC6) is operational. <Check Procedure> Check voltage across a Control Board (copier: PWB-C) pin and GND when the sensor is blocked. • Voltage across PJ18C-2 and GND DC5 V when unblocked DC0 V when blocked	NO	• Change Scanner Home Position Sensor (PC6).
		YES	• Change Control Board (PWB-C).

(8) C0B60: Bin Switching Motor malfunction

Relevant Electrical Parts	
Bin Switching Motor (JS-202: M1) Upper Home Position Sensor (JS-202: PC32) Lower Home Position Sensor (JS-202: PC33)	Main Board (JS-202: PWB-A) Master Board (copier: PWB-A)

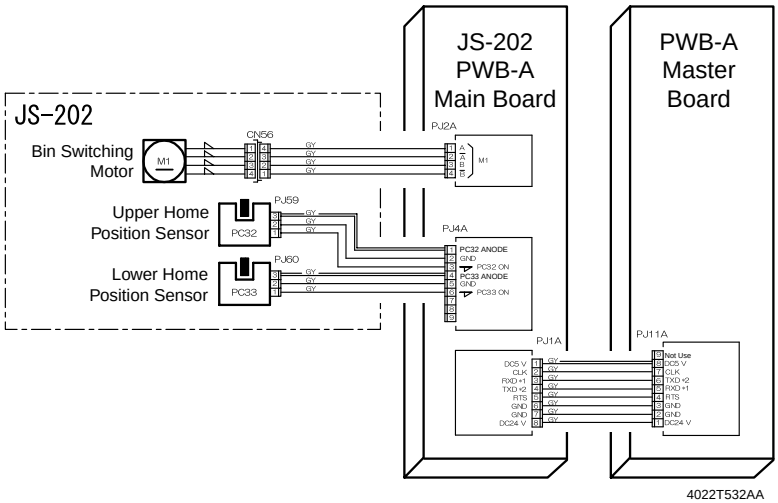

Step	Check	Result	Action
1	Bin Switching Motor (JS-202: M1) turns when the Power Switch is turned ON.	NO	• Change Bin Switching Motor (JS-202: M1).
2	Tray is moved as the Bin Switching Motor (JS-202: M1) operates.	NO	• Reinstall motor unit.
3	Upper Home Position Sensor (JS-202: PC32) is operational. <Check Procedure> Check voltage across a Main Board (JS-202: PWB-A) pin and GND when the sensor is blocked. • Voltage across PJ4A-3 and GND DC0 V when unblocked DC5 V when blocked	NO	• Change Upper Home Position Sensor (PC32).

Step	Check	Result	Action
4	Lower Home Position Sensor (JS-202: PC33) is operational. <Check Procedure> Check voltage across a Main Board (JS-202: PWB-A) pin and GND when the sensor is blocked. • Voltage across PJ4A-6 and GND DC0 V when unblocked DC5 V when blocked	NO	• Change Lower Home Position Sensor (PC33).
		YES	• Change Master Board (copier: PWB-A).

(9) C0B80 Shift Motor malfunction

Relevant Electrical Parts	
Shift Motor (OT-103: M1) Home Sensor (OT-103: S31)	Main Board (OT-103: PWB-A) Master Board (copier: PWB-A)

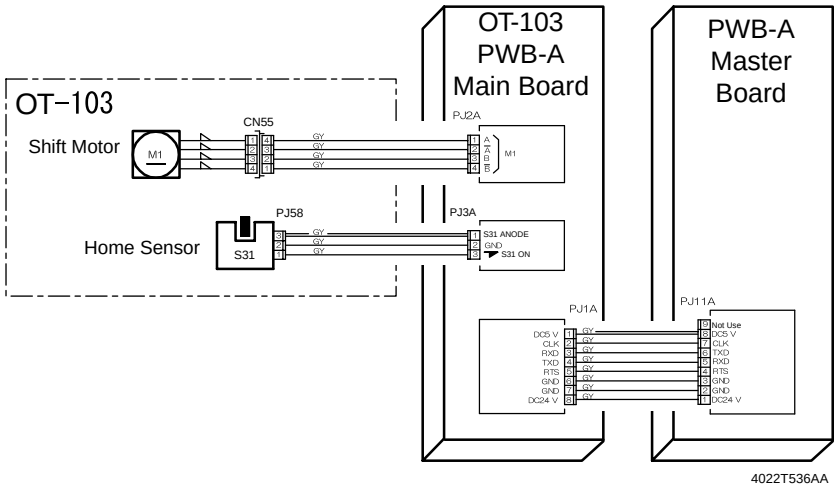

Step	Check	Result	Action
1	Shift Motor (OT-103: M1) turns when the Power Switch is turned ON.	NO	• Change Shift Motor (OT-103: M1).
2	Exit Roller operates as the Shift Motor (OT-103: M1) is energized.	NO	• Reinstall motor unit.
3	Home Sensor (OT-103: S31) is operational. <Check Procedure> Check voltage across a Main Board (OT-103: PWB-A) pin and GND when the sensor is blocked. • Voltage across PJ3A-3 and GND DC5 V when blocked DC0 V when unblocked	NO	• Change Home Sensor (OT-103: S31).
		YES	• Change Master Board (copier: PWB-A).

(10) C0F32: Faulty ATDC Sensor

C0F33: Improperly adjusted ATDC Sensor

Relevant Electrical Parts	
ATDC Sensor (UN1)	Master Board (copier: PWB-A)

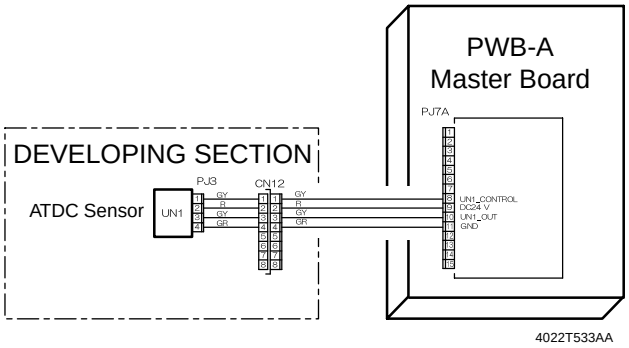

Step	Check	Result	Action
1	Developer is not even in the Developer Mixing Chamber.	YES	• Gently swing the IU in the horizontal direction to even out developer in the Developer Mixing Chamber.
2	ATDC Sensor (UN1) is dirty with foreign matter (such as paper dust) other than developer.	YES	• Clean ATDC Sensor (UN1).
3	Foreign matter (such as paper dust) is trapped in the Developer Mixing Chamber.	YES	• Remove foreign matter from the Developer Mixing Chamber.
4	The following voltages are supplied from the Master Board (copier: PWB-A). <Check Procedure> Check voltage across a Master Board pin and GND when the Power Switch is turned ON. • DC5.39 V to 8.15 V across PJ7A-8 and GND • DC1.41 V to 4.98 V across PJ7A-10 and GND	YES	• Change ATDC Sensor (UN1) and developer.
		NO	• Change Master Board (copier: PWB-A).

(11) C1038: Engine connection failure

Relevant Electrical Parts	
Master Board (copier: PWB-A)	Control Board (copier: PWB-C)

Step	Check	Result	Action
1	C1038 reappears when the copier is turned OFF and ON again. <Check Procedure> Turn OFF and ON the Power Switch to check to see if C1038 reappears.	YES	• Go to step 2.
2	The connection between Master Board (copier: PWB-A) and Control Board (copier: PWB-C) is loose.	YES	• Make good connection between Master Board (copier: PWB-A) and Control Board (copier: PWB-C).
		NO	• Change Control Board (copier: PWB-C). • Change Master Board (copier: PWB-A).

(12) C1200: Faulty ASIC/memory

Relevant Electrical Parts	
Control Board (copier: PWB-C)	

Step	Check	Result	Action
1	C1200 reappears when the copier is turned OFF and ON again. <Check Procedure> Turn OFF and ON the Power Switch to check to see if C1200 reappears.	YES	• Go to step 2.
2	Memory (U8) on Control Board (copier: PWB-C) is loose.	YES	• Reinstall memory (U8).
		NO	• Change Control Board (copier: PWB-C).

(13) C1300: Polygon Motor malfunction (startup failure, Lock signal failure, faulty Lock signal)
C13F0: Faulty HSYNC

Relevant Electrical Parts	
Polygon Motor (M2)	Master Board (copier: PWB-A)

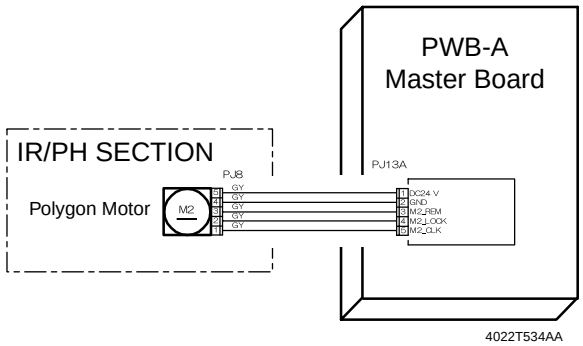

4022T534AA

Step	Check	Result	Action
1	C1300/C13F0 reappears when the copier is turned OFF and ON again. <Check Procedure> Turn OFF and ON the Power Switch to check to see if C1300/C13F0 reappears.	YES	• Go to step 2.
2	Polygon Motor (M2) connector PJ13A is loose.	YES	• Reconnect connector PJ13A.
3	The following voltage is supplied to the Polygon Motor (M2). <Check Procedure> Check voltage across a Master Board (copier: PWB-A) and GND when the Start key is pressed. • Voltage across PJ13A-3 and GND DC5 V while Polygon Motor (M2) is in standby state DC0 V when Polygon Motor (M2) is energized	YES	• Change PH Unit.
		NO	• Change Master Board (copier: PWB-A).

(14) C1468: Faulty EEPROM

Relevant Electrical Parts	
Control Board (copier: PWB-C)	

Step	Check	Result	Action
1	C1468 reappears when the copier is turned OFF and ON again. <Check Procedure> Turn OFF and ON the Power Switch to check to see if C1468 reappears.	YES	• Go to step 2.
2	Memory (U29) on Control Board (copier: PWB-C) is loose.	YES	• Reinstall memory (U29).
		NO	• Change Control Board (copier: PWB-C).

(15) C14A3: IR fluorescent lamp fault

Relevant Electrical Parts	
Exposure Lamp (LA2) Inverter Board (copier: PU2)	Control Board (copier: PWB-C)

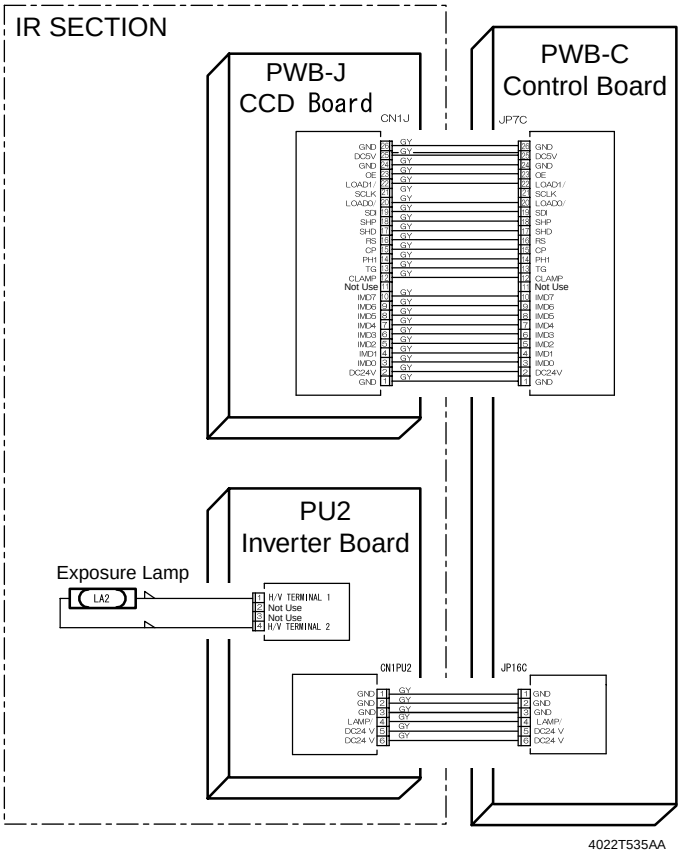

Step	Check	Result	Action
1	Exposure Lamp turns ON when the Power Switch is turned ON.	NO	• Go to step 3.
2	Exposure Lamp is abnormally lit (flickers or abnormally dark) when the Power Switch is turned ON.	NO	• Go to step 4.
3	Inverter Board (copier: PU2) connector is loose.	YES	• Reconnect.
		NO	• Change Exposure Lamp (LA2).
4	CCD Board (copier: PWB-J) connector is loose.	YES	• Reconnect.
5	The following voltage is supplied from the Control Board (copier: PWB-C). <Check Procedure> Check voltage across a Control Board (copier: PWB-C) pin and GND when the Power Switch is turned ON. • Voltage across JP16C-4 and GND DC24 V when Exposure Lamp (LA2) is OFF DC0 V when Exposure Lamp (LA2) is ON	YES	• Change Inverter Board (PU2).
		NO	• Change Control Board (copier: PWB-C).

(16) The copier does not turn ON.

Relevant Electrical Parts	
Power Switch (S1) DC Power Supply (PU1) Control Panel (UN2)	Control Board (copier: PWB-C) Master Board (copier: PWB-A)

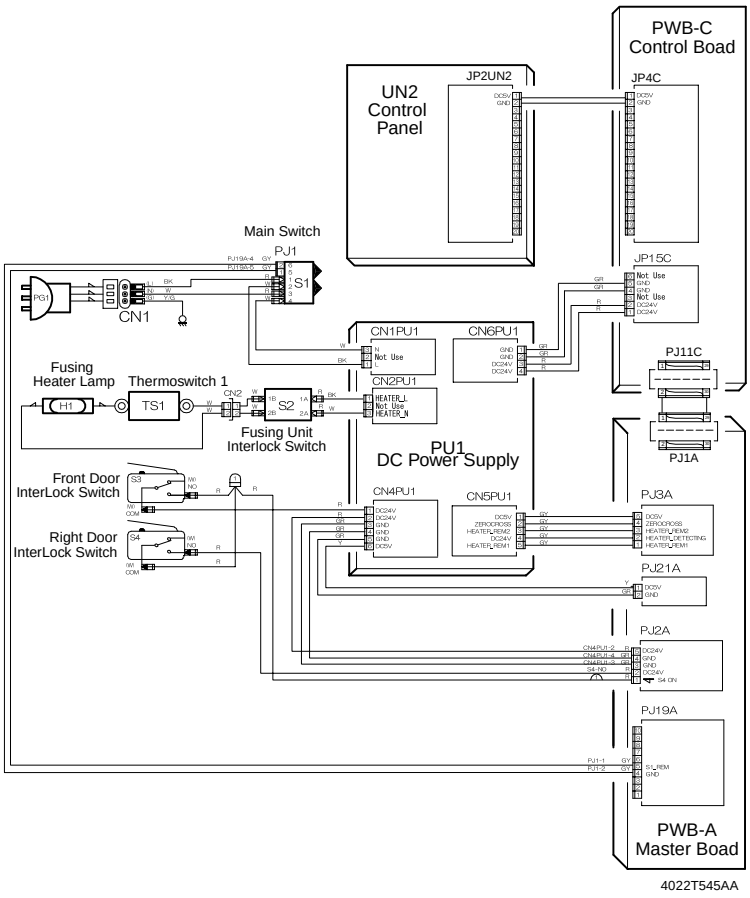

4022T545AA

Step	Check	Result	Action
1	A malfunction code appears when the Power Switch is turned ON.	YES	• Go to step 2.
		NO	• Go to step 3.
2	The malfunction is temporarily reset when the Power Switch is turned OFF and ON with the Stop key held down.	YES	• Perform the troubleshooting procedure according to the malfunction code.

Step	Check	Result	Action
3	Power supply voltage check <Check Procedure> Check voltage across pins of DC Power Supply (PU1) when the Power Switch is turned ON. • Voltage across CN1PU1-1 and CN1PU1-3 AC0 V when the Power Switch is OFF Rated AC voltage when the Power Switch is turned ON	NO	• Check wall outlet for voltage. • Check power cord for continuity. • Check Power Switch.
4	Check of output of DC24 V to Control Board (copier: PWB-C) <Check Procedure> Check voltage across a Control Board (copier: PWB-C) pin and GND when the Power Switch is turned ON. • Voltage across JP15C-1 and GND • Voltage across JP15C-2 and GND DC0 V when the Power Switch is OFF DC24 V when the Power Switch is turned ON	NO	• Check Front Door Interlock Switch (S3). • Check Right Door Interlock Switch (S4). • Change DC power Supply (PU1).
5	Check of output of DC24 V to Master Board (copier: PWB-A) <Check Procedure> Check voltage across a Master Board (copier: PWB-A) pin and GND when the Power Switch is turned ON. • Voltage across PJ2A-2 and GND DC0 V when the Power Switch is OFF DC24 V when the Power Switch is turned ON	NO	• Check Front Door Interlock Switch (S3). • Check Right Door Interlock Switch (S4). • Change DC power Supply (PU1).
6	Check of output of DC 5 V to Master Board (copier: PWB-A) <Check Procedure> Check voltage across a Master Board (copier: PWB-A) pin and GND when the Power Switch is turned ON. • Voltage across PJ21A-1 and GND DC0 V when the Power Switch is OFF DC24 V when the Power Switch is turned ON	NO	• Change DC power Supply (PU1).
7	Check of output of DC5 V to control panel (UN2) <Check Procedure> Check voltage across a Control Board (copier: PWB-C) pin and GND when the Power Switch is turned ON. • Voltage across JP4C-1 and GND DC0 V when the Power Switch is OFF DC5 V when the Power Switch is turned ON	NO	• Check Control Board (copier: PWB-C). • Change Master Board (copier: PWB-A). • Change DC power Supply (PU1).
		YES	• Change control panel (UN2).

5. IMAGE FAILURE

5-1. Image Failure Troubleshooting

- In this chapter, troubleshooting is divided into “initial checks” and “troubleshooting procedures classified by image failures.”
- If any image failure has occurred, first make the initial checks, then proceed to the corresponding image failure troubleshooting procedure.

5-2. Initial Checks

- Determine if the failure is attributable to a basic cause or causes.

Section	Step	Check	Result	Action
Installation site	1	The installation site complies with the requirements specified in “PRECAUTIONS FOR INSTALLATION” contained in GENERAL.	NO	• Change the installation site.
Paper	2	Paper meets product specifications.	NO	• Change paper for one that meets specifications. • Instruct user to use paper that meets specifications and is recommended.
	3	Paper is damp.	YES	• Change paper for one that is dry. Then, instruct user to use paper that meets specifications and in how to store paper.
Original	4	Original is placed correctly.	NO	• Reposition original. • Instruct user in how to place original correctly.
	5	Original is written in light pencil.	YES	• Change original. • Instruct user to use original with appropriate image density.
	6	Original is transparent (OHP transparencies, etc.).	YES	• Change original. • Instruct user to use originals that meet specifications.
	7	Original Glass is dirty.	YES	• Clean Original Glass.
	8	Original Glass is scratchy.	YES	• Change Original Glass.
PM parts	9	The PM parts relating to image formation have reached the end of cleaning/replacement cycles.	YES	• Clean PM parts. • Change PM parts.

• Determine if the failure is attributable to an input system (IR) or output system (engine).

<table>
<tr><th>Check</th><th>Result</th><th>Action</th></tr>
<tr><td rowspan="2">Copy made at a reduced ratio.

Original
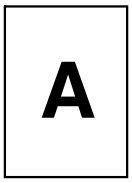
1177T03YA</td><td>Full-size copy Reduced copy
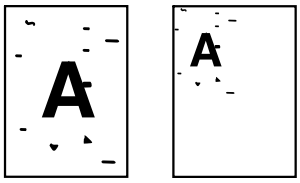
1177T04YA</td><td>Input system</td></tr>
<tr><td>Full-size copy Reduced copy
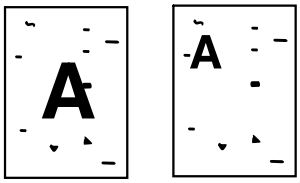
1177T05YA</td><td>Output system</td></tr>
</table>

5-3. Image Failure Samples

1. Blank copy

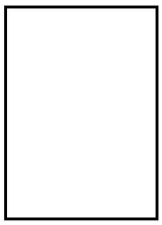

2. Black copy

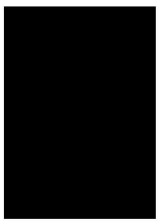

3. Low image density

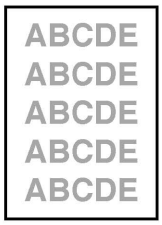

4. Foggy background or rough image

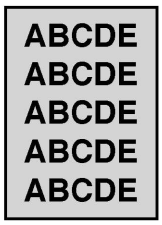

5. Black streaks or bands

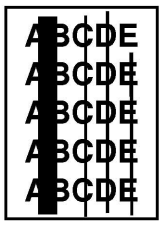

6. Black spots

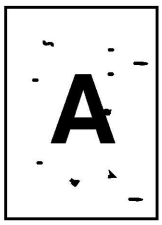

7. Blank streaks or bands

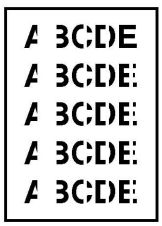

8. Void areas

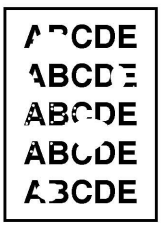

9. Smear on back

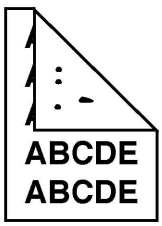

10. Uneven image density

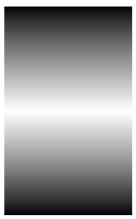

11. Gradation reproduction failure

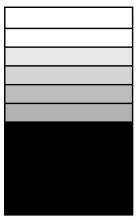

12. Periodically uneven image



4022T542

5-4. Troubleshooting Procedures by Image Failure

(1) Blank copy

Section	Step	Check	Result	Action
Output system	1	Imaging Unit is installed correctly.	NO	• Reinstall.
	2	Connector between the Imaging Unit and copier is dirty.	YES	• Clean.
	3	PH Shutter (located along the laser path between the PH Unit and PC Drum) is not in correct position or malfunctions.	YES	• Correct or reinstall.
	4	PH Unit connectors PJ12A and PJ13A are loose.	YES	• Reconnect.
	5	Image Transfer Roller Assy is installed correctly.	NO	• Reinstall.
	6	Image transfer current contact is dirty, broken, or bent.	YES	• Clean, correct, or change.
	7	Developing bias contact is dirty, broken, or bent.	YES	• Clean, correct, or change.
	8	High Voltage Unit (HV1) connectors CN1HV1 and CN2HV1 are loose.	YES	• Reconnect.
	9	The following voltage is supplied from the Master Board (copier: PWB-A). <Check Procedure> Check voltage across a Master Board pin and GND when the Start key is pressed. • Voltage across PJ8A-8 and GND DC14 V in standby state DC0 V when Start key is pressed	YES	• Change IU. • Change PH Unit. • Change High Voltage Unit (HV1).
			NO	• Change Master Board (copier: PWB-A).
Input system	1	CCD Board (PWB-J) connector JP7C is loose.	YES	• Reconnect.
	2	Control Board (copier: PWB-C) connector PJ1A is loose.	YES	• Reconnect.
			NO	• Change Control Board (copier: PWB-C). • Change Master Board (copier: PWB-A).

(2) Black copy

Section	Step	Check	Result	Action
Output system	1	PC Drum Charge Corona grid mesh and Comb Electrode are loose.	YES	• Reinstall.
	2	PC Drum Charge Corona contact is dirty, scratchy, folded, bent, or damaged.	YES	• Correct or change.
	3	Grid bias contact is dirty, folded, or bent.	YES	• Clean, correct, or change.
	4	PC Drum ground contact is dirty, scratchy, bent, or damaged.	YES	• Clean, correct, or change.
	5	High Voltage Unit (HV1) connectors CN1HV1 and CN2HV1 are loose.	YES	• Reconnect.
	6	PH Unit connectors PJ12A and PJ13A are loose.	YES	• Reconnect.
	7	The following voltage is supplied from the Master Board (copier: PWB-A). <Check Procedure> Check voltage across a Master Board pin and GND when the Start key is pressed. • Voltage across PJ8A-8 and GND DC14 V in standby state DC0 V when Start key is pressed	YES	• Change IU. • Change PH Unit. • Change High Voltage Unit (HV1).
			NO	• Change Master Board (copier: PWB-A).
Input system	1	Exposure Lamp turns ON when the Power Switch is turned ON.	NO	Go to step 3.
	2	Exposure Lamp is abnormally lit (flickers or abnormally dark) when the Power Switch is turned ON.	NO	Go to step 4.
	3	Inverter Board (copier: PU2) connector is loose.	YES	Reconnect.
			NO	Change Exposure Lamp.
	4	CCD Board (copier: PWB-J) connector is loose.	YES	Reconnect.
	5	Control Board (copier: PWB-C) connector PJ1A is loose.	YES	Reconnect.
	6	The following voltage is supplied from the Control Board (copier: PWB-C). <Check Procedure> Check voltage across a Control Board (copier: PWB-C) pin and GND when the Power Switch is turned ON. • Voltage across JP16C-4 and GND DC24 V when Exposure Lamp (LA2) is OFF DC0 V when Exposure Lamp (LA2) is ON	YES	• Change Inverter Board (PU2). • Change CCD Unit.
			NO	• Change Control Board (copier: PWB-C).

(3) Low image density

Section	Step	Check	Result	Action
Output system	1	Image density changes after "Toner Replenisher" has been run. • "Toner Replenisher" of Utility	YES	• Replenish the supply of toner using "Toner Replenisher."
	2	Image density changes after "ID Adjustment" and "VG Adjustment" have been made.	YES	• Readjust. For more details, see SWITCHES ON PWBs/ TECH. REP. SETTINGS.
	3	Image transfer current contact is dirty, folded, or bent.	YES	• Clean, correct, or change.
	4	Developing bias contact is dirty, folded, or bent.	YES	• Clean, correct, or change.
	5	High Voltage Unit (HV1) connectors CN1HV1 and CN2HV1 are loose.	YES	• Reconnect.
	6	ATDC Sensor (UN1) is dirty with foreign matter (such as paper dust) other than developer.	YES	• Clean.
	7	The following voltages develop from the ATDC Sensor (UN1). <Check Procedure> Check voltage across a Master Board pin and GND when the Power Switch is turned ON. • DC5.39 V to 8.15 V across PJ7A-8 and GND • DC1.41 V to 4.98 V across PJ7A-10 and GND	NO	• Change ATDC Sensor (UN1) and then change developer.
	8	The following voltage is supplied from the Master Board (copier: PWB-A). <Check Procedure> Check voltage across a Master Board pin and GND when the Start key is pressed. • Voltage across PJ8A-8 and GND DC14 V in standby state DC0 V when Start key is pressed	YES	• Change IU. • Change High Voltage Unit (HV1).
			NO	• Change Master Board (copier: PWB-A).

Section	Step	Check	Result	Action
Input system	1	Shading sheet reading portion (the portion on the backside of the Original Glass to which Original Width Scale is affixed) is dirty.	YES	• Clean.
	2	CCD Board (copier: PWB-J) connector is loose.	YES	• Reconnect.
	3	Control Board (copier: PWB-C) connector PJ1A is loose.	YES	• Reconnect.
			NO	• Change Control Board (copier: PWB-C). • Change Master Board (copier: PWB-A).

(4) Foggy background or rough image

Section	Step	Check	Result	Action
Output system	1	Image condition changes after "ID Adjustment" and "VG Adjustment" have been made.	YES	• Readjust. For more details, see SWITCHES ON PWBs/ TECH. REP. SET-TINGS.
	2	PC Drum surface and the areas in contact with Ds Collars are dirty with foreign matter, or deformed or worn.	YES	• Clean or change.
	3	Main Erase (LA1) is dirty.	YES	• Clean.
	4	Grid bias contact is dirty, scratchy, deformed, worn, or damaged.	YES	• Clean, correct, or change.
	5	ATDC Sensor (UN1) is dirty with foreign matter (such as paper dust) other than developer.	YES	• Clean.
	6	The following voltages develop from the ATDC Sensor (UN1). <Check Procedure> Check voltage across a Master Board pin and GND when the Power Switch is turned ON. • DC5.39 V to 8.15 V across PJ7A-8 and GND • DC1.41 V to 4.98 V across PJ7A-10 and GND	NO	• Change ATDC Sensor (UN1) and then change developer.
	7	The following voltage is supplied from the Master Board (copier: PWB-A). <Check Procedure> Check voltage across a Master Board pin and GND when the Start key is pressed. • Voltage across PJ8A-8 and GND DC14 V in standby state DC0 V when Start key is pressed	YES	• Adjust Db. For details, see DIS/ REASSEMBLY, ADJUSTMENT. • Change Main Erase (LA1). • Change PC Drum. • Change IU. • Change High Voltage Unit (HV1).
			NO	• Change Master Board (copier: PWB-A).
Input system	1	Original Glass is dirty.	YES	• Clean.
	2	Scanner mirrors are dirty.	YES	• Clean.
	3	Exposure Lamp (LA2) is dirty.	YES	• Clean.
	4	CCD Unit lens and CCD surface are dirty. <Check Procedure> Remove lens cover to check for possible contamination.	YES	• Clean.

Section	Step	Check	Result	Action
Input system	5	Exposure Lamp is abnormally lit (flickers or abnormally dark) when the Start key is pressed.	NO	• Go to step 7.
	6	Inverter Board (copier: PU2) connector CN1PU2 is loose.	YES	• Reconnect.
			NO	• Change Exposure Lamp (LA2).
	7	CCD Board (copier: PWB-J) connector PJ7C is loose.	YES	• Reconnect.
			NO	• Change Inverter Board (PU2). • Change Control Board (copier: PWB-C).

(5) Black streaks or bands

Section	Step	Check	Result	Action
Output system	1	PC Drum is dirty or scratchy.	YES	• Clean or change.
	2	Foreign matter (such as paper dust) sticks to the Cleaning Blade of IU or the blade curves upward.	YES	• Remove foreign matter, correct, or change.
	3	DB of IU is plugged with foreign matter (such as paper dust).	YES	• Remove foreign matter.
	4	PC Drum Charge Corona grid mesh and Comb Electrode are dirty, scratchy, deformed, damaged, or out of position.	YES	• Clean or change.
	5	Left Fusing Roller is dirty or scratchy.	YES	• Clean or change.
	6	PH window of the PH Unit is dirty or scratchy.	YES	• Clean or change.
			NO	• Change IU.
Input system	1	Original Glass is dirty, scratchy, worn, or damaged.	YES	• Clean or change.
	2	Shading sheet reading portion (the portion on the backside of the Original Glass to which Original Width Scale is affixed) is dirty.	YES	• Clean.
	3	Scanner mirrors are dirty, scratchy, or damaged.	YES	• Clean or change.
	4	Exposure Lamp (LA2) is dirty.	YES	• Clean or change.
	5	CCD Unit lens and CCD surface are dirty or scratchy. <Check Procedure> Remove lens cover to check for possible contamination.	YES	• Clean or change.
	6	CCD Board (copier: PWB-J) connector is loose.	YES	• Reconnect.
	7	Control Board (copier: PWB-C) connector PJ1A is loose.	YES	• Reconnect.
			NO	• Change CCD Unit. • Change Control Board (copier: PWB-C).

(6) Black spots

Section	Step	Check	Result	Action
Output system	1	Toner is present along the paper path.	YES	• Clean.
	2	PC Drum is dirty or scratchy.	YES	• Clean or change.
	3	Tip of the PC Drum Paper Separator Finger is dirty, scratchy, deformed, worn, or damaged.	YES	• Clean or change.
	4	Left Fusing Roller is dirty or scratchy.	YES	• Clean or change.
	5	Tip of the Fusing Paper Separator Finger is dirty, scratchy, deformed, worn, or damaged.	YES	• Clean or change Fusing Paper Separator Fingers and finger springs.
	6	Image condition changes after “VG Adjustment” has been made.	YES	• Readjust. For details, see SWITCHES ON PWBs/ TECH. REP. SETTINGS.
Input system	1	Original Glass is dirty or scratchy.	YES	• Clean.
	2	CCD Board (copier: PWB-J) connector is loose.	YES	• Reconnect.
	3	Control Board (copier: PWB-C) connector PJ1A is loose.	YES	• Reconnect.
			NO	• Change CCD Unit. • Change Control Board (copier: PWB-C).

(7) Blank streaks or bands

Section	Step	Check	Result	Action
Output system	1	PC Drum ground terminal is dirty, scratchy, deformed, or damaged.	YES	• Clean, correct, or change.
	2	DB of IU is plugged with foreign matter (such as paper dust).	YES	• Remove foreign matter.
	3	PC Drum Charge Corona grid mesh and Comb Electrode are dirty, scratchy, deformed, or damaged.	YES	• Clean, correct, or change.
	4	Post-fusing guide plate is dirty, scratchy, deformed, worn, or damaged.	YES	• Clean or change.
	5	PH window of the PH Unit is dirty, scratchy, or damaged.	YES	• Clean or change.
			NO	• Change IU.
Input system	1	Original Glass is dirty, scratchy, worn, or damaged.	YES	• Clean or change.
	2	Shading sheet reading portion (the portion on the backside of the Original Glass to which Original Width Scale is affixed) is dirty.	YES	• Clean.
	3	Scanner mirrors are dirty, scratchy, or damaged.	YES	• Clean or change.
	4	CCD Unit lens and CCD surface are dirty or scratchy. <Check Procedure> Remove lens cover to check for possible contamination.	YES	• Clean or change.
	5	CCD Board (copier: PWB-J) connector is loose.	YES	• Reconnect.
	6	Control Board (copier: PWB-C) connector PJ1A is loose.	YES	• Reconnect.
			NO	• Change CCD Unit. • Change Control Board (copier: PWB-C).

(8) Void areas

Section	Step	Check	Result	Action
Output system	1	Foreign matter is present along the paper path.	YES	• Remove foreign matter.
	2	Paper dust plugs up the Paper Dust Remover.	YES	• Clean or change.
	3	PC Drum Charge Corona, grid mesh, and Comb Electrode are loose.	YES	• Reinstall.
	4	PC Drum Charge Corona contact is dirty, scratchy, deformed, worn, or damaged.	YES	• Clean, correct, or change.
	5	Developing Roller is dirty, scratchy, deformed, worn, or damaged.	YES	• Clean or change.
	6	Toner is even on Sleeve/Magnet Roller.	NO	• Adjust DB. For details, see DIS/ REASSEMBLY, ADJUSTMENT.
	7	Developer is not even in the Developer Mixing Chamber of IU.	YES	• Even out developer in the Developer Mixing Chamber.
	8	DB of IU is plugged with foreign matter (such as paper dust).	YES	• Remove foreign matter.
	9	Image Transfer Roller is dirty, scratchy, deformed, worn, or damaged.	YES	• Clean, correct, or change.
	10	Image Transfer Roller Assy is installed correctly.	NO	• Reinstall.
	11	Charge Neutralizing Plate is dirty, scratchy, folded, or bent.	YES	• Clean, correct, or change.
	12	Left Fusing Roller is dirty, scratchy, deformed, or worn.	YES	• Clean or change.
			NO	• Change IU.

(9) Smear on back

Section	Step	Check	Result	Action
Output system	1	Toner is spilled over area inside copier.	YES	• Clean interior.
	2	Toner is present along the paper path.	YES	• Clean.
	3	Right Fusing Roller is dirty, scratchy, or damaged.	YES	• Clean or change.
	4	Image Transfer Roller is dirty.	YES	• Clean or change.
	5	Grid bias contact is dirty, scratchy, deformed, worn, or damaged.	YES	• Clean, correct, or change.
			NO	• Change High Voltage Unit (HV1). • Change Master Board (copier: PWB-A).

(10) Uneven image density

Section	Step	Check	Result	Action
Output system	1	PC Drum ground plate is dirty, scratchy, deformed, worn, or damaged.	YES	• Clean, correct, or change.
	2	PC Drum Charge Corona grid mesh and Comb Electrode are dirty, scratchy, deformed, worn, damaged, or loose.	YES	• Clean, correct, or change.
	3	Image Transfer Roller is dirty, scratchy, deformed, worn, or damaged.	YES	• Clean or change.
	4	Sleeve/Magnet Roller is dirty, scratchy, deformed, worn, or damaged.	YES	• Clean or change.
	5	Toner is even on Sleeve/Magnet Roller.	NO	• Adjust DB. For details, see DIS/ REASSEMBLY, ADJUSTMENT.
	6	Developer is not even in the Developer Mixing Chamber of IU.	YES	• Even out developer in the Developer Mixing Chamber.
			NO	• Change IU. • Change Master Board (copier: PWB-A).
Input system	1	Original Glass is dirty, scratchy, worn, or damaged.	YES	• Clean or change.
	2	Shading sheet reading portion (the portion on the backside of the Original Glass to which Original Width Scale is affixed) is dirty.	YES	• Clean.
	3	Scanner mirrors are dirty, scratchy, or damaged.	YES	• Clean or change.
	4	Exposure Lamp (LA2) is dirty.	YES	• Clean or change.
	5	CCD Unit lens and CCD surface are dirty or scratchy. <Check Procedure> Remove lens cover to check for possible contamination.	YES	• Clean or change.
	6	Exposure Lamp is abnormally lit (flickers or abnormally dark) when the Power Switch is turned ON.	NO	• Go to step 8.
	7	Inverter Board (copier: PU2) connector CN1PU2 is loose.	YES	• Reconnect.
			NO	• Change Exposure Lamp (LA2).
	8	CCD Board (copier: PWB-J) connector is loose.	YES	• Reconnect.

Section	Step	Check	Result	Action
Input system	9	Control Board (copier: PWB-C) connector PJ1A is loose.	YES	• Reconnect.
			NO	• Change CCD Unit. • Change Control Board (copier: PWB-C).

(11) Gradation reproduction failure

Section	Step	Check	Result	Action
Output system	1	PC Drum is dirty.	YES	• Clean.
	2	Image Transfer Roller is dirty, scratchy, deformed, worn, or damaged.	YES	• Clean or change.
	3	PH Unit connectors PJ12A and PJ13A are loose.	YES	• Reconnect.
	4	PH window of PH Unit is dirty.	YES	• Clean.
	5	ATDC Sensor (UN1) is dirty with foreign matter (such as paper dust) other than developer.	YES	• Clean.
	6	The following voltages develop from the ATDC Sensor (UN1). <Check Procedure> Check voltage across a Master Board pin and GND when the Power Switch is turned ON. • DC5.39 V to 8.15 V across PJ7A-8 and GND • DC1.41 V to 4.98 V across PJ7A-10 and GND	NO	• Change ATDC Sensor (UN1) and developer.
			YES	• Change Master Board (copier: PWB-A).
Input system	1	Original Glass is dirty, scratchy, worn, or damaged.	YES	• Clean or change.
	2	Shading sheet reading portion (the portion on the backside of the Original Glass to which Original Width Scale is affixed) is dirty.	YES	• Clean.
	3	Scanner mirrors are dirty, scratchy, or damaged.	YES	• Clean or change.
	4	Exposure Lamp (LA2) is dirty.	YES	• Clean or change.
	5	CCD Unit lens and CCD surface are dirty or scratchy. <Check Procedure> Remove lens cover to check for possible contamination.	YES	• Clean or change.
	6	Exposure Lamp is abnormally lit (flickers or abnormally dark) when the Start key is pressed.	NO	• Go to step 8.
	7	Inverter Board (copier: PU2) connector CN1PU2 is loose.	YES	• Reconnect.
			NO	• Change Exposure Lamp (LA2).
	8	CCD Board (copier: PWB-J) connector is loose.	YES	• Reconnect.
	9	Control Board (copier: PWB-C) connector PJ1A is loose.	YES	• Reconnect.
			NO	• Change CCD Unit. • Change Control Board (copier: PWB-C).

(12) Periodically uneven image

Section	Step	Check	Result	Action
Output system	1	IU is securely fastened using the dedicated fixing screws.	NO	• Secure in position.
	2	PH Unit is securely fastened using the dedicated fixing screws.	NO	• Secure in position.
	3	IU drive mechanism is dirty or damaged.	YES	• Clean or change.
	4	PC Drum surfaces in contact with Ds Collars and drive mechanism are dirty, scratchy, deformed, or worn.	YES	• Clean or change.
	5	Synchronizing Roller drive mechanism is dirty, scratchy, deformed, or worn.	YES	• Clean or change.
	6	Fusing Unit drive mechanism is dirty, scratchy, deformed, or worn.	YES	• Clean or change.
			NO	• Change Master Board (copier: PWB-A).
Input system	1	Scanner Motor (M5) is securely fastened using the dedicated fixing screws.	NO	• Secure in position.
	2	Scanner Motor (M5) drive mechanism is dirty or damaged.	YES	• Clean or change.
	3	Timing belt of the scanner drive mechanism is dirty with foreign matter or out of correct position.	YES	• Remove foreign matter or reinstall belt.
	4	Scanner drive mechanism pulley is dirty with foreign matter, scratchy, deformed, worn, or damaged.	YES	• Remove foreign matter or change.
	5	Scanner Drive Cables are wound incorrectly.	YES	• Re-wind Scanner Drive Cables.
	6	Scanner rails and bushings are dirty with foreign matter, scratchy, deformed, worn, or damaged.	YES	• Clean or change.
	7	Scanner moves smoothly. <Check Procedure> Gently move the Scanner by hand to check for smooth operation.	NO	• Lubricate the Scanner rails. • Reinstall Scanner.
	8	CCD Board (copier: PWB-J) connector is loose.	YES	• Reconnect.
	9	Control Board (copier: PWB-C) connector PJ1A is loose.	YES	• Reconnect.
			NO	• Change CCD Unit. • Change Control Board (copier: PWB-C).

6. OTHER ERROR CODES

- When an error that does not fall into the category of paper transport failure or malfunction, a corresponding error code is displayed in the Display.

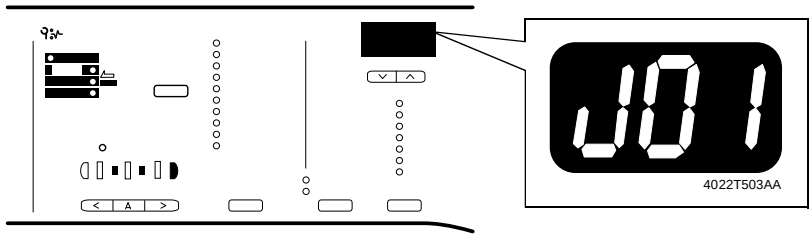

Code	Description	Resetting Procedure
tnr	Toner empty stop	• Change Toner Bottle.
nP	Paper size is physically changed of the paper source currently selected for use while a copy cycle is being run.	• Load paper of the size originally loaded in the paper source being used. • Turn OFF and ON the Power Switch.
	Copier does not find paper of the appropriate size when a copy cycle is run using the ADF and in the Mixed Original and Auto Paper mode.	• Load the paper source with paper of the appropriate size. • Turn OFF and ON the Power Switch.
oL	Front Door, Right Door, or Side Door is open.	• Close the open door or lower the ADF.
oU	ADF is raised.	
oA	ADF document take-up door is open.	
H11	Scan image memory over	• Turn OFF and ON the Power Switch.
H2	The length of the paper set does not match that of the paper actually taken up and fed in.	• Load paper of the correct size again according to the set paper size. • Turn OFF and ON the Power Switch. • For copier tray: Slide out and in the paper tray in which the size error has occurred. • For Manual Bypass Tray: Place paper in the Manual Bypass Tray. • For Multiple Bypass Tray: Unload paper from the Multiple Bypass Tray, then reload it back again.
H3	JS-202 exit capacity exceeded	• Remove paper that has been fed out.
J9	JS-202 Bin Switching Motor error (Job Tray is unable to return to its home position because paper left in the tray)	• Remove paper from the tray. • Turn OFF and ON the Power Switch.

Code	Description	Resetting Procedure
PLG	Plug-In Counter not plugged in	• Plug in the Plug-In Counter. • Change setting in Security mode. For details, see SWITCHES ON PWBs/TECH. REP. SETTINGS.
Err	A numeral outside the specified setting range is entered.	• Automatically reset 1 sec. after the error display is given. • Turn OFF and ON the Power Switch.
Blank	Mechanical total counter not connected	• Connect the mechanical total counter and then turn OFF and ON the Power Switch. • Change setting in Security mode. For details, see SWITCHES ON PWBs/TECH. REP. SETTINGS.
nc1	Maintenance Counter count value reached (the set count of the Maintenance Counter is reached)	• Enter a count value again. For details, see SWITCHES ON PWBs/TECH. REP. SETTINGS.
nc2	IU life stop mode (the life value of the Maintenance Counter is reached)	• Initialize the counter value. For details, see SWITCHES ON PWBs/TECH. REP. SETTINGS.



Copyright
2001 MINOLTA CO., LTD.
Printed in Japan

Use of this manual should be strictly supervised to avoid disclosure of confidential information.

MINOLTA Co.,Ltd.

4021-7991-11 01100500

MINOLTA

Service Manual
[General]

The essentials of imaging

Di152/Di183

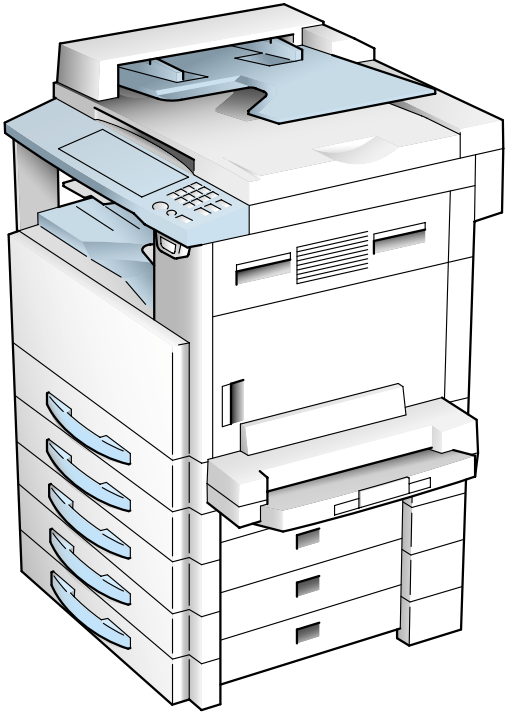

INDEX (GENERAL)

GENERAL

MECHANICAL/ELECTRICAL

GENERAL

CONTENTS

1. SPECIFICATION G-1
2. PRECAUTIONS FOR INSTALLATION G-5
   2-1. Installation Site G-5
   2-2. Power Source G-5
   2-3. Grounding G-5
3. PRECAUTIONS FOR USE G-6
   3-1. To ensure that the copier is used in an optimum condition G-6
   3-2. Operating Environment G-6
   3-3. Power Requirements G-6
   3-4. Note G-6
4. HANDLING OF CONSUMABLES G-7
5. OTHER PRECAUTIONS G-8
6. SYSTEM OPTIONS G-9

1. SPECIFICATION

TYPE	:	Console/Desktop Type
ORIGINAL SCANNING SYSTEM	:	CCD Line Sensor
PHOTOCONDUCTOR	:	Organic Photoconductor
COPYING SYSTEM	:	Electrostatic Dry Powdered Image Transfer to Plain Paper with a Laser
RESOLUTION	:	600 × 600 dpi
PAPER FEEDING SYSTEM	:	2-way system Manual Bypass...Single Drawer.....250 Sheets
EXPOSURE SYSTEM	:	Mirror Scanning
DEVELOPING SYSTEM	:	MT-HG System
CHARGING SYSTEM	:	Comb Electrode (1) DC Negative Corona with Scorotron System
IMAGE TRANSFER SYSTEM	:	Roller Image Transfer
PAPER SEPARATING SYSTEM	:	Paper Separator Fingers and Charge Neutralizing Plate
FUSING SYSTEM	:	Heat Roller
PAPER DISCHARGING SYSTEM	:	Charge Neutralizing Brush
MAX. ORIGINAL SIZE	:	A3L, 11 × 17

COPY MEDIUM

Paper Source		Drawer	Manual Bypass
Type	Plain Paper (60 to 90 g/m^2)	❍	❍
	Transparencies	❍	❍
	Thick Paper (91 to 157 g/m^2)	❍	❍
	Postcards	❍	❍
	Recycled Paper (60 to 90 g/m^2)	❍	❍
Dimensions	Maximum (Width × Length)	297 × 432 mm	297 × 432 mm
	Minimum (Width × Length)	90 × 140 mm	90 × 140 mm

MULTIPLE COPIES	:	1 to 99
WARMING-UP TIME	:	30 sec. or less (23, Rated Voltage)
FIRST COPY TIME	:	7 sec. or less (A4C, Drawer, full size mode)

CONTINUOUS COPY SPEED (copies/min)

Size	Speed	
	Di152	Di183
A4C	15	18
A4L	12	14
A3L	9	10
B4L	10	12
B5C	16	20
B5L	13	15
8-1/2 × 11C	15	18
8-1/2 × 11L	12	14
11 × 17L	9	10
8-1/2 × 14L	10	12
11 × 14	10	12

ZOOM RATIOS

		Metric	Inch
Fixed	Full Size	100 %	100 %
	Enlargement	200 % 141 % 115 %	200 % 129 % 121 %
	Reduction	81 % 70 % 50 %	78 % 64 % 50 %
Variable	50 % to 200 % (in 1 % increments)		

LENS : Through Lens
EXPOSURE LAMP : Fluorescent Lamp

POWER/CURRENT CONSUMPTION (copier only)

Exposure Lamp (Rating)	Fusing Roller Heater Lamp (Rating)	Max. Power Consumption (full system)	Max. Current Consumption (full system)
24 V 14.4 W	900 W	110 V: 970 W 120 V: 1090 W 127 V: 1180 W 220 V: 990 W 230 V: 1050 W 240 V: 1120 W	110 V: 8.9 A 120 V: 9.1 A 127 V: 9.3 A 220 V: 4.5 A 230 V: 4.6 A 240 V: 4.7 A

POWER REQUIREMENTS : 110 V, 120 V, 127 V, 220 V to 240 V, 50/60 Hz

ENVIRONMENTAL CONDITIONS

Temperature	10 to 30 °C with a fluctuation of 10 °C or less per hour
Humidity	15 to 85 % RH with a fluctuation of 10 % RH or less per hour
Ambient Illumination	3,000 lux or less
Levelness	1° (1.75 mm/100 mm)

COPIER DIMENSION : W...590 mm (23-1/4)
D....611 mm (24)
H....487 mm (19-1/4)
COPIER WEIGHT : 39 kg (86 lb)

Multiple Bypass (MB-5): option

TYPE	:	Multiple Bypass
INSTALLATION	:	Mounted on the copier

COPY PAPER TYPE

Type	Plain Paper (60 to 90 g/m^2)	50 sheets
	Transparencies	20 sheets
	Thick Paper (91 to 157 g/m^2)	20 sheets
	Postcards	20 sheets
	Recycled Paper (60 to 90 g/m^2)	50 sheets
Dimensions	Maximum (Width × Length)	297 × 432 mm
	Minimum (Width × Length)	90 × 140 mm
Size	A3L, B4L, FLS, A4L, A4C, B5L, B5C, A5C,11 × 17, 11 × 14, 8-1/2 × 14, 8-1/2 × 11L, 8-1/2 × 11C, 8-1/2 × 5-1/2	

DOCUMENT ALIGNMENT	:	Center
CAPACITY	:	50 sheets (80 g/m^2)
POWER REQUIREMENTS	:	DC24 V, DC5 V (supplied from copier)
MAX. POWER CONSUMPTION	:	9 W or less
DIMENSIONS	:	W...245 mm (9-3/4) D....435 mm (17-1/4) H....137 mm (5-1/2)
WEIGHT	:	2.7 kg (6 lb)
OPERATING ENVIRONMENT	:	Same as copier

Job Tray (JS-202): option

TYPE : Multiple Bypass
INSTALLATION : Mounted on the copier

CAPACITY

		Exit Tray of the machine	Job Tray
Type	Plain Paper (60 to 90 g/m²)	150 sheets (A4C/L) 75 sheets (except A4C/L)	1Stacking height up to 22 mm 100 sheets (A4C/L) 50 sheets (except A4C/L)
	Transparencies	20 sheets	10 sheets
	Thick Paper (91 to 157 g/m²)		
	Postcards		
	Recycled Paper (60 to 90 g/m²)	150 sheets (A4C/L) 75 sheets (except A4C/L)	Stacking height up to 22 mm 100 sheets (A4C/L) 50 sheets (except A4C/L)
Dimensions	Maximum (Width × Length)	297 × 432 mm	
	Minimum (Width × Length)	90 × 140 mm	140 × 140 mm

Exit Tray by Application Mode

Application Mode	Exit Tray of the machine	Job Tray
Fax and Copier	Copier	Fax
Printer and Copier	Copier	Printer
Fax, Copier and Printer	Copier	Fax and Printer

POWER REQUIREMENTS : DC24 V, DC5 V (supplied from copier)

Shifting Unit (OT-103): option

TYPE : Multiple Bypass
INSTALLATION : Mounted on the copier
POWER REQUIREMENTS : DC24 V, DC5 V (supplied from copier)

2. PRECAUTIONS FOR INSTALLATION

2-1. Installation Site

To ensure safety and utmost performance of the copier, the copier should NOT be used in a place:

- Where it will be subjected to extremely high or low temperature or humidity.
- Where it will be subjected to sudden fluctuations in either temperature or humidity.
- Which is exposed to direct sunlight.
- Which is in the direct air stream of an air conditioner, heater, or ventilator.
- Which has poor ventilation or is dusty.
- Which does not have a stable, level floor or where it will receive undue vibration.
- Which is near any kind of heating device.
- Which is near volatile flammables (thinner, gasoline, etc.).
- Where it may be splashed with water.
- Which puts the operator in the direct stream of exhaust from the copier.
- Where ammonia gas might be generated.

2-2. Power Source

- If any other electrical equipment is sourced from the same power outlet, make sure that the capacity of the outlet is not exceeded.
- Use a power source with little voltage fluctuation.
- Never connect by means of a multiple socket any other appliances or machines to the outlet being used for the copier.
- Ensure that the copier does not ride on the power cord or communication cable of other electrical equipment, and that it does not become wedged into or underneath the mechanism.
- Make the following checks at frequent intervals:

✻ Is the power plug abnormally hot?
✻ Are there any cracks or scrapes in the cord?
✻ Has the power plug been inserted fully into the outlet?
✻ Does something, including the copier itself, ride on the power cord?

Use an outlet with a capacity of 110 to 127 V, 15 A or more. 220 to 240 V, 10 A or more.

2-3. Grounding

- Always ground the copier to prevent receiving electrical shocks in the case of electrical leakage.
- Connect the ground wire to the ground terminal of the outlet or a grounding contact which complies with the local electrical standards.
- Never connect the ground wire to a gas pipe, the ground wire for a telephone, lightning arrester, or a water pipe for fear of fire and electrical shock.

3. PRECAUTIONS FOR USE

3-1. To ensure that the copier is used in an optimum condition

- Never place a heavy object on the copier or subject the copier to shocks.
- Insert the power plug all the way into the outlet.
- Do not attempt to remove any panel or cover which is secured while the copier is making copies.
- Do not turn OFF the copier while it is making copies.
- Provide good ventilation when making a large number of copies continuously.
- Never use flammable sprays near the copier.
- If the copier becomes inordinately hot or produces abnormal noise, turn it OFF and unplug it.
- Do not turn ON the power switch at the same time when you plug the power cord into the outlet.
- When unplugging the power cord, do not pull on the cord; hold the plug and pull it out.
- Do not bring any magnetized object near the copier.
- Do not place a vase or vessel containing water on the copier.
- Be sure to turn OFF the power switch at the end of the workday or upon power failure.
- Use care not to drop paper clips, staples, or other small pieces of metal into the copier.

3-2. Operating Environment

The operating environmental requirements of the copier are as follows.

- Temperature: 10 to 30 °C
- Humidity: 15 to 85 % RH
- Rate of temperature change: 10 °C/h
- Rate of humidity change: 10 % RH/h

3-3. Power Requirements

The power source voltage requirements are as follows.

- Voltage fluctuation: AC110 to 127 V/220 to 240 V ± 10 %
  (copying performance assured)
  +10 %/-15 % (paper feeding performance assured)
- Frequency fluctuation: 50/60 Hz ± 0.3 %

3-4. Note

- It is prohibited to copy paper and hard currencies, government securities, and municipal bonds (even when they are stamped as “Sample”).
- For fear of infringement of copyright, it is also prohibited to copy copyrighted works, including books, music, works of art, maps, drawings, motion pictures, and photos except when the copy is to be used only personally.

4. HANDLING OF CONSUMABLES

Before using any consumables, always read the label on its container carefully.

- Paper can be easily damaged by dampness. To prevent absorption of moisture, store paper, which has been removed from its wrapper but not loaded in the drawer, in a sealed plastic bag in a cool, dark place.
- Keep consumables out of the reach of children.
- Do not touch the PC Drum with bare hands.
- The same sized paper is of two kinds, short grain and long grain. Short grain paper should only be fed through the copier crosswise, long grain paper should only be fed lengthwise.
- If your hands become soiled with toner, wash them with soap and water.
- Do not throw away any used consumables (PC Drum, starter, toner, etc.). They are to be collected.
- Do not burn, bury in the ground, or throw into the water any consumables (PC Drum, starter, toner, etc.).
- Do not store consumables in a place which:

✻ Is hot and humid.
✻ Is subject to direct sunlight.
✻ Has an open flame nearby.

5. OTHER PRECAUTIONS

Use the following precautions when performing service jobs for a copier that uses a laser.

- When a service job needs to be performed in the laser beam path, such as when working around the printerhead or PC Drum, be sure first to unplug the power cord of the copier from the outlet.
- If the job requires that the power cord be left plugged in, observe the following precautions.

1. Take off your watch, ring and any other reflective object and wear laser protective goggles.
2. Keep users away from the job site.
3. Do not bring a highly reflective tool into the laser beam path during the service job.

6. SYSTEM OPTIONS

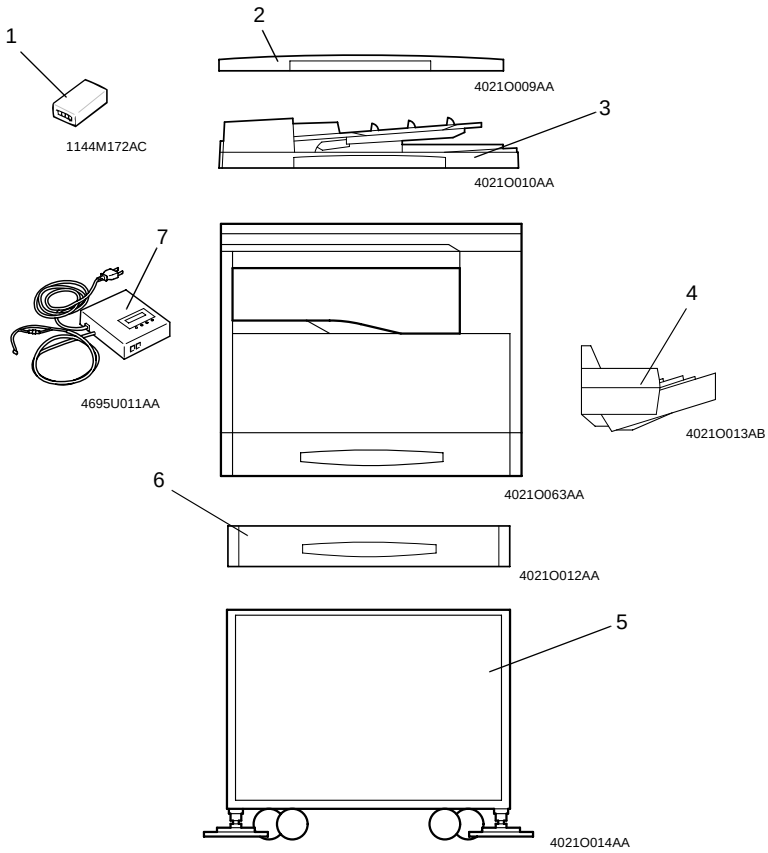

1. Plug-In Counter
2. Original Cover OC-5
3. Automatic Document Feeder AF-10
4. Multiple Bypass MB-5
5. Copy Desk
6. Paper Feed Cabinet PF-120
7. Data Terminal DT-201
8. Job Tray JS-202
   (Illustration none)
9. Sifting Unit OT-103
   (Illustration none)
10. Memory M16-4, M32-3
    (Illustration none)
11. Mechanical Counter CNT1
    (Illustration none)

MECHANICAL/ ELECTRICAL

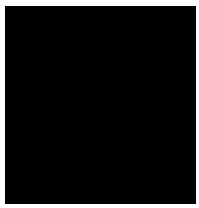

CONTENTS

1. CROSS SECTIONAL VIEW M-1
2. COPY PROCESS M-2
3. DRIVE SYSTEM M-4
4. SEQUENTIAL EXPLANATION M-5
5. WATCHDOG FUNCTION (CPU OVERRUN MONITOR) M-6
5-1. Watchdog Function Post-Processing M-6
6. IMAGE STABILIZATION SYSTEM M-7
7. IMAGING UNIT (I/U) M-8
7-1. Imaging Unit (IU) Drive Mechanism M-9
8. PC DRUM SECTION M-10
8-1. PC Drum Drive Mechanism M-10
8-2. Grounding of the PC Drum M-11
9. PC DRUM CHARGING SECTION M-12
10. IMAGE READING SECTION M-13
10-1.Image Processing Process M-14
10-2.Exposure Components Section M-15
10-3.Scanner and Mirrors Carriage Movement Mechanism M-16
(1) Scanner Movement Mechanism M-16
(2) 2nd/3rd Mirrors Carriage Movement Mechanism M-16
10-4.Scanner Motor Drive Control M-17
11. MEMORY STORAGE IMAGE PROCESSING SYSTEM M-18
11-1.Laser Exposure Process M-19
12. DEVELOPING UNIT SECTION M-20
12-1.Developing Unit Drive Mechanism M-21
12-2.Sleeve/Magnet Roller M-22
12-3.Developing Bias M-22
12-4.ATDC Sensor M-23
(1) ATDC Sensor Automatic Adjustment M-23
12-5.Toner Replenishing Mechanism M-24
12-6.Toner Replenishing Control M-25
12-7.T/C Recovery Mode M-26
12-8.Toner Bottle Home Position Detection Mechanism M-27
13. PAPER TAKE UP/FEED SECTION M-28
13-1.Drawer In Position Detection M-29
13-2.Paper Empty Detection Mechanism M-29
13-3.Paper Lifting Plate M-30
13-4.Universal Tray Paper Size Detection Mechanism M-30
13-5.Paper Take Up Mechanism M-32
(1) Paper Separating Mechanism M-32
13-6.Paper Take Up Control M-33
(1) Paper Take Up Retry Control M-33
14. MANUAL BYPASS SECTION M-34
14-1.Paper Take Up Drive Mechanism M-34
14-2.Paper Detection Mechanism M-34
14-3.Manual Feed Take Up Control M-35
15. MULTIPLE BYPASS SECTION M-36

15-1.Paper Take Up Drive Mechanism M-36
15-2.Paper Take-Up Mechanism M-37
15-3.Paper Empty Detection Mechanism M-38
15-4.Paper Take Up Control M-38
15-5.Paper Take Up Retry Control M-39
16. IMAGE TRANSFER AND PAPER SEPARATION SECTION M-40
17. PC DRUM CLEANING SECTION M-41
18. MAIN ERASE SECTION M-42
19. FUSING UNIT SECTION M-43
19-1.Fusing Unit Drive Mechanism M-44
19-2.Fusing Rollers Pressure Mechanism M-44
19-3.Fusing Temperature Control M-45
19-4.CPM Control M-45
20. JOB TRAY (JS-202): Option M-46
20-1.Tray Selecting Mechanism M-47
20-2.Tray-Full Detecting Mechanism M-48
20-3.Job Tray Paper Detecting Mechanism M-48
21. SHIFTING UNIT (OT-103): Option M-49
21-1.Exit Position Shifting Mechanism M-50
22. OTHER MECHANISM M-52
22-1.Cooling Mechanism M-52
(1) Power Supply Section Cooling Mechanism M-52
(2) Fusing Section Cooling Mechanism M-53

1. CROSS SECTIONAL VIEW

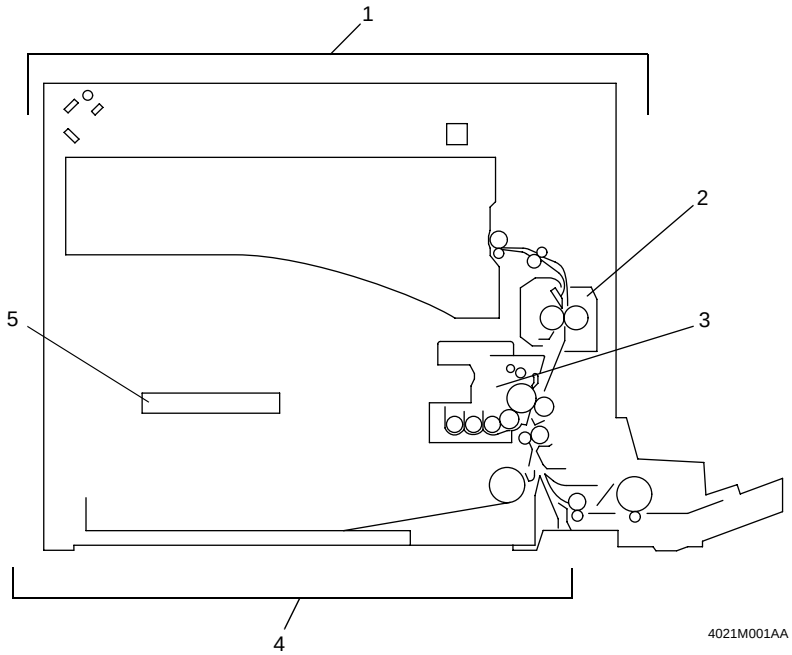

1. IR Section
2. Fusing Unit
3. Imaging Unit
4. Paper Take-Up/Feed Section
5. PH Section

2. COPY PROCESS

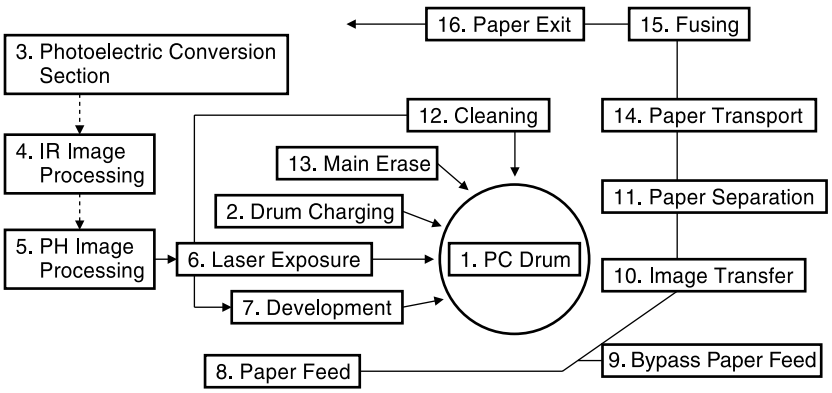

1. PC Drum
- Used as the medium on which a visible developed image of the original is formed.

2. Drum Charging
- A uniform negative DC charge is deposited across the entire surface of the PC Drum.

3. Photoelectric Conversion
- CCD converts the image data represented by light reflected off the original to a corresponding electrical signal which, in turn, is output to IR image-processing section.

4. IR Image-Processing
- The electrical signal is converted to an 8-bit digital image signal (A/D conversion) which, in turn, goes through appropriate correction before being output to the PH Image Processing.

5. PH Image Processing
- After going through corrections, the digital image signal is converted to a corresponding electrical signal (D/A conversion) that controls the intensity of the light from the laser diode.

6. Laser Exposure
- The laser beam strikes the surface of the PC Drum, forming an electrostatic latent image.

7. Developing
- Toner negatively charged in the Developer Mixing Chamber is attracted onto the electrostatic latent image changing it to a visible, developed image.
- An AC/DC negative bias voltage is applied to the Sleeve/Magnet Roller to prevent toner from being attracted onto those areas of the PC Drum which correspond to the background areas of the original.

8. Paper Feed
- Paper is fed from the drawer.

9. Bypass Paper Feed
- Feeds paper from the Manual Bypass Tray, one piece at a time.
- The optional Multiple Bypass Tray (MB-5), when mounted on the machine, permits continuous paper feeding.

10. Image Transfer
- A DC positive charge is applied to the Image Transfer Roller to transfer the visible image on the surface of the PC Drum onto the paper.Paper Separation.

11. Paper Separation
- The PC Drum Paper Separator Fingers remove paper from the surface of the PC Drum.
- The Charge Neutralizing Plate neutralizes any charge left on the paper.

12. Cleaning
- Residual toner on the surface of the PC Drum is scraped off.
- The toner is then recycled back to the Developing Unit.

13. Main Erase
- Light is directed to the surface of the PC Drum to neutralize any surface potential remaining there after cleaning.

14. Paper Transport
- The paper is fed to the Fusing Unit.

15. Fusing
- The developed image is permanently fused to the paper by a combination of heat and pressure applied by the Right and Left Fusing Rollers.

16. Paper Exit
- The paper is fed out onto the Exit Tray.
- When the optional Job Tray (JS-202) is mounted, the specific tray into which paper is fed is selected according to the application mode.
- The optional Shifting Unit (OT-103), when mounted, permits different finishing functions set on the machine (Non-Sort, and Sort).

3. DRIVE SYSTEM

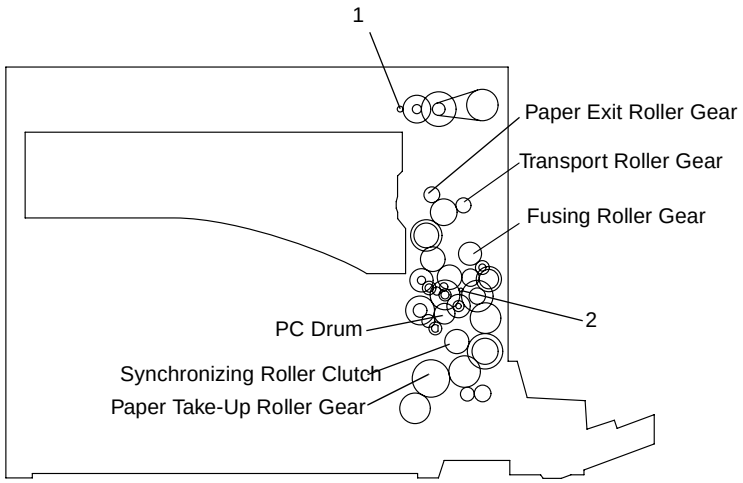

4021M003AA

1. Scanner Motor M5
2. Main Motor M1

4. SEQUENTIAL EXPLANATION

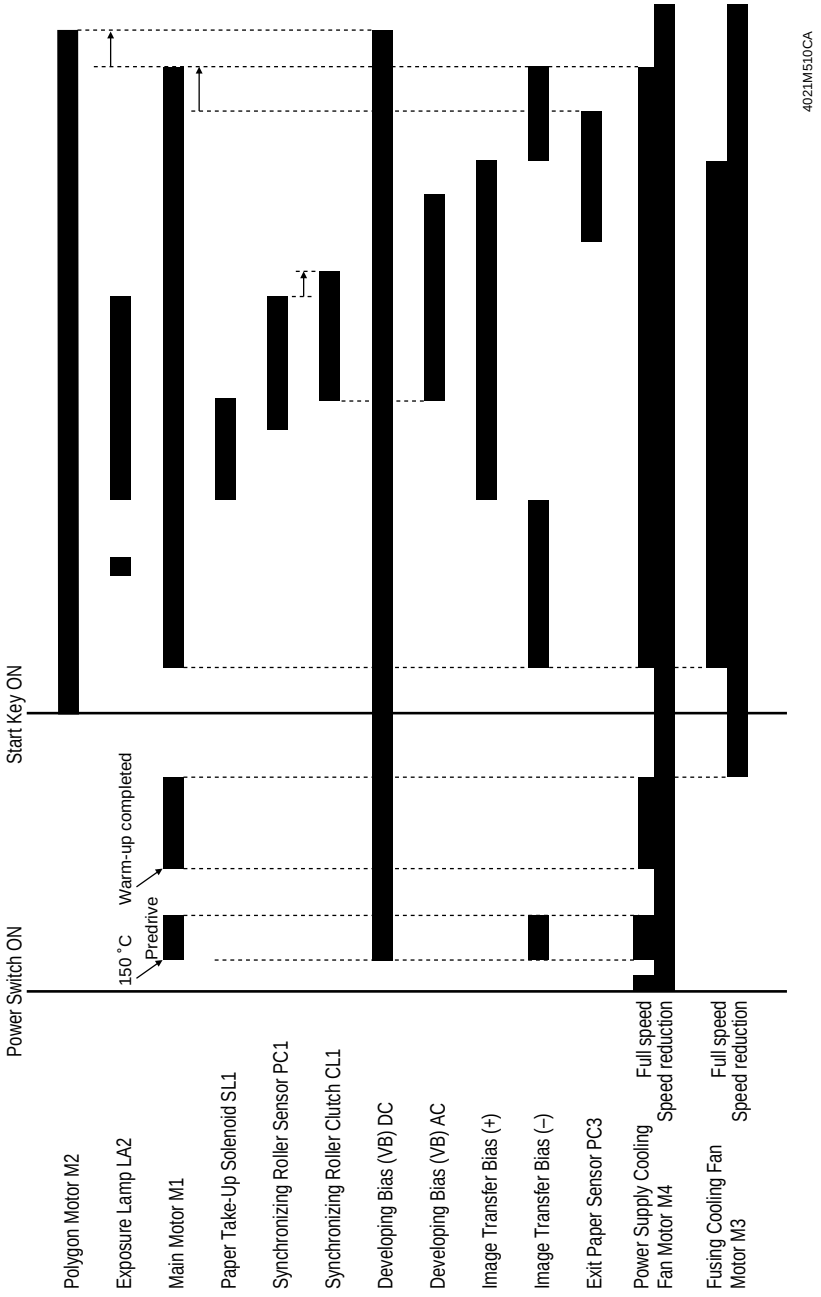

5. WATCHDOG FUNCTION (CPU OVERRUN MONITOR)

- The watchdog function, or CPU overrun monitor function, monitors whether any of the CPUs mounted in the copier overruns.
- If the function detects that a CPU overruns, the copier automatically resets the CPU, thereby restarting the logic circuit and mechanism.

5-1. Watchdog Function Post-Processing

The following processing is performed if a faulty condition is detected in the CPU.
When the copier CPU is found faulty:

- All CPUs are reset and the system is restarted.
- If the CPU is found faulty during a copy cycle, the system attempts to feed all sheets of paper out of the copier before restarting. (If paper is left inside the copier, the copier detects it as a misfeed as it is restarted.)

6. IMAGE STABILIZATION SYSTEM

The following image stabilization controls are provided to ensure stabilized copy image.

Purpose	Means	Control
To stabilize image density.	Vg/Vb control	The Vg/Vb control voltage is varied to bring Vg/Vb to an appropriate level according to the following settings. • Tech. Rep. Choice: ID Adjustment • Tech. Rep. Choice: VG Adjustment • User's Choice: Print Density • IU Life Counter • Paper type
To stabilize image transfer.	Image transfer output control	The image transfer output is varied to bring the image transfer current to an appropriate level according to the following conditions. • Paper type • Paper width • B/W ratio of image

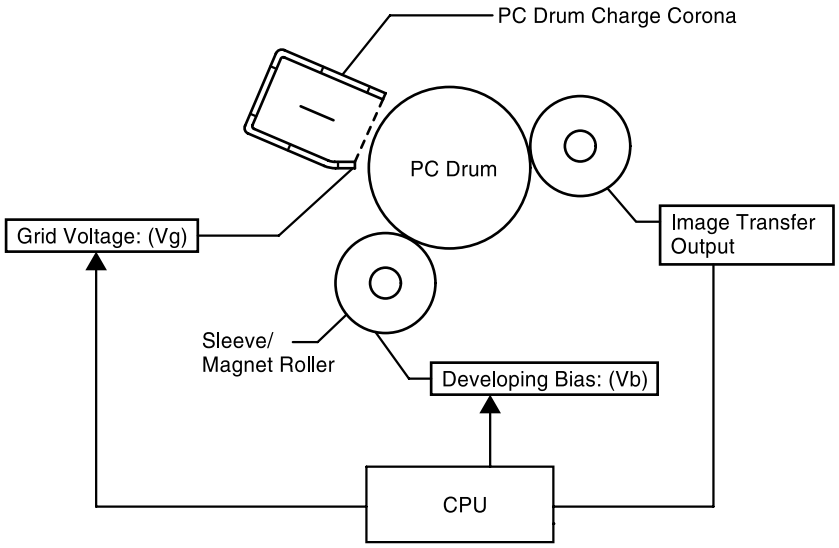

4021M066CA

7. IMAGING UNIT (I/U)

- The IU integrates the PC Drum, Developing Unit, PC Drum Charge Corona, and the PC Drum Cleaning Mechanism, all in one body.

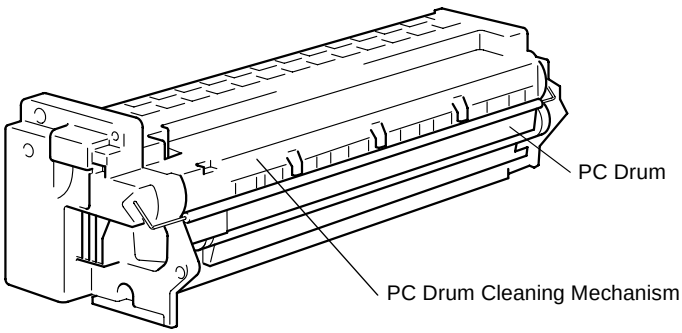

4021M006AB

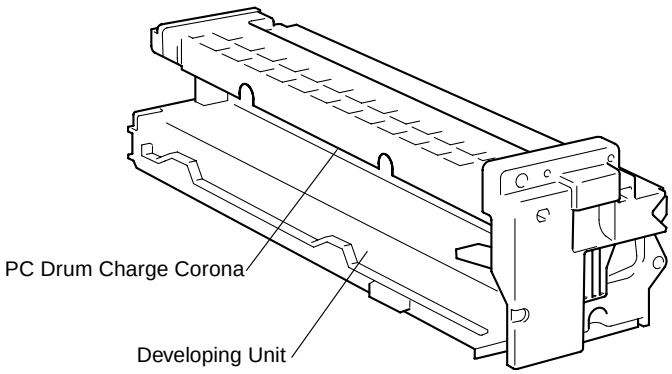

4021M007AB

7-1. Imaging Unit (IU) Drive Mechanism

- The IU is driven by the Main Motor.

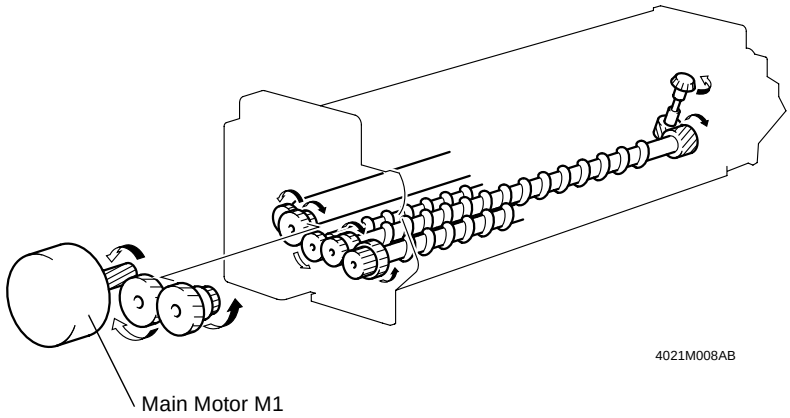

Elevtrical Component	Control Signal	Forward Rotation	Backward Rotation	OFF	Wiring Diagram
M1	PWB-A PJ7A-5	L	L	H	17-G
	PWB-A PJ7A-7	H	L	H	

8. PC DRUM SECTION

- The PC Drum consists of layers of semiconductive materials placed on an aluminum alloy base, on which an electrostatic latent image is formed.

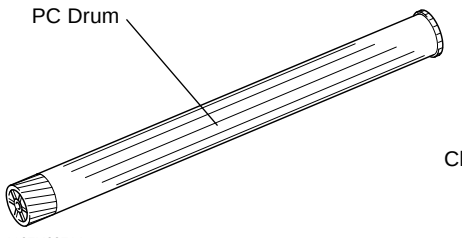

1167M007AA

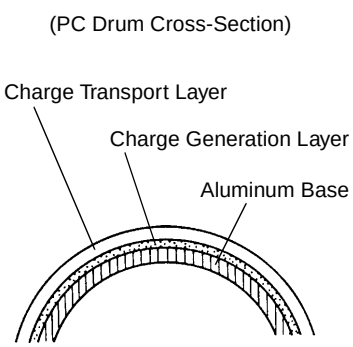

1139M007AA

8-1. PC Drum Drive Mechanism

- The PC Drum is rotated by drive from a motor.

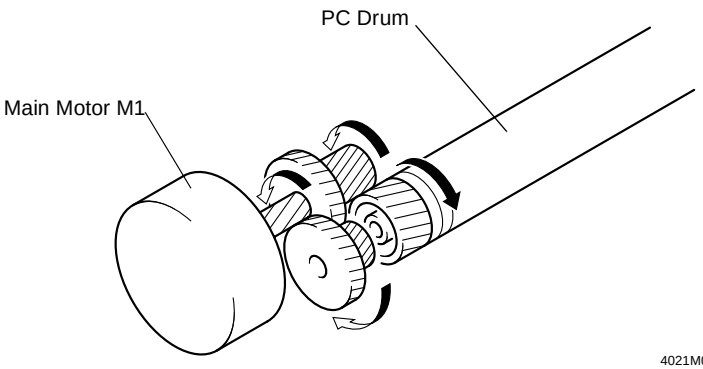

4021M009AA

Elevtrical Component	Control Signal	Forward Rotation	OFF	Wiring Diagram
M1	PWB-A PJ7A-5	L	H	17-G
	PWB-A PJ7A-7	H	H	

8-2. Grounding of the PC Drum

- The potential on the surface of the PC Drum exposed to the light is grounded to the frame.

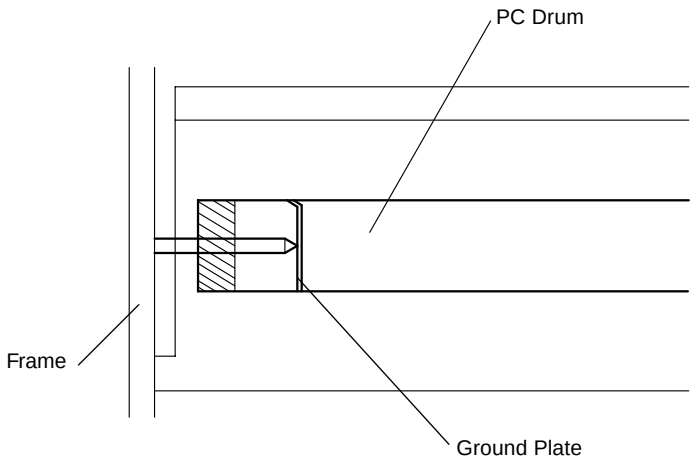

4021M010AA

9. PC DRUM CHARGING SECTION

- The PC Drum Charge Corona has a scorotron grid to deposit a charge evenly across the surface of the PC Drum.
- The corona unit has a comb electrode that discharges only toward the grid mesh, thus minimizing the amount of ozone produced.

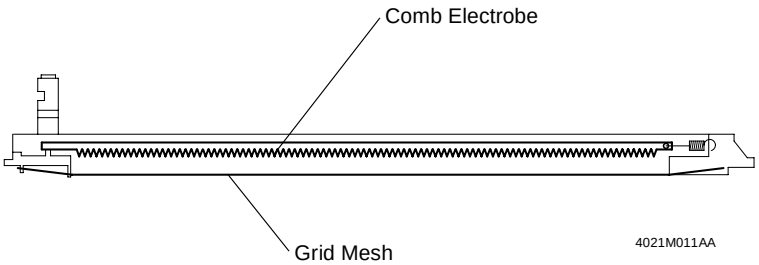

Elevtrical Component	Control Signal	ON	OFF	Wiring Diagram
HV1	PWB-A PJ8A-8	L	H	5-C

10. IMAGE READING SECTION

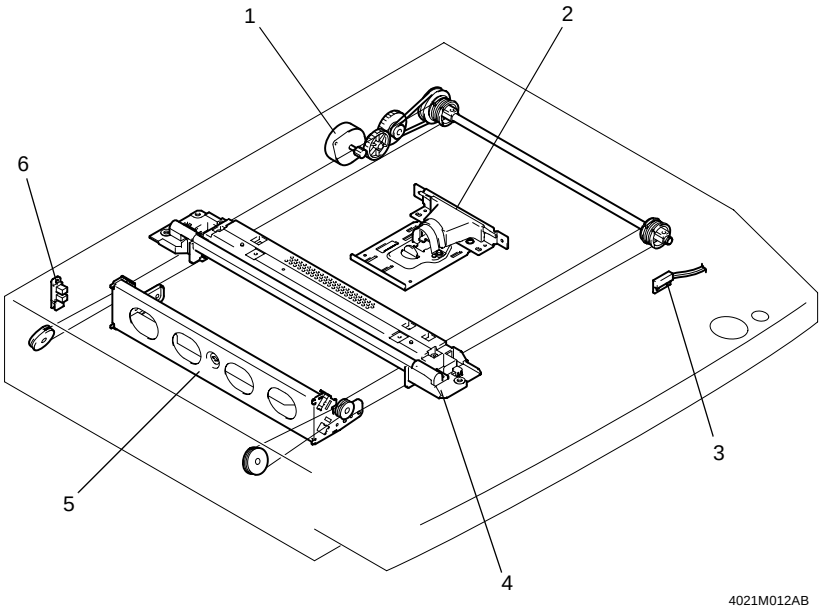

1. Scanner /Motor M5
2. CCD Board PWB-J
3. Size Reset Switch S10
4. Scanner
5. 2nd/3rd Mirrors Carriage
6. Scanner Home Position Sensor PC6

10-1. Image Processing Process

1. Photoelectric Conversion
- Light reflected off the original is read by the CCD Sensor which converts the data to a corresponding analog signal.

2. Analog-to-Digital Conversion
- The analog signal output from the CCD Sensor is converted to a corresponding 8-bit digital signal.

3. Shading Correction
- An error is corrected that occurs due to variations in sensitivity of each CCD chip and the light distribution varying along the length of the Exposure Lamp.
- The data obtained through actually illuminating the shading sheet with the Exposure Lamp is compared with the shading sheet reading reference value (white = max. data value) to make the necessary correction.

4. Zoom Processing
- The synchronous timing of the input data (read) and output data (read) is varied to decrease (reduction) or increase (enlargement) the number of data readings, thereby reducing or enlarging the image in the main scanning direction.

5. Data is sent to the PH.

10-2. Exposure Components Section

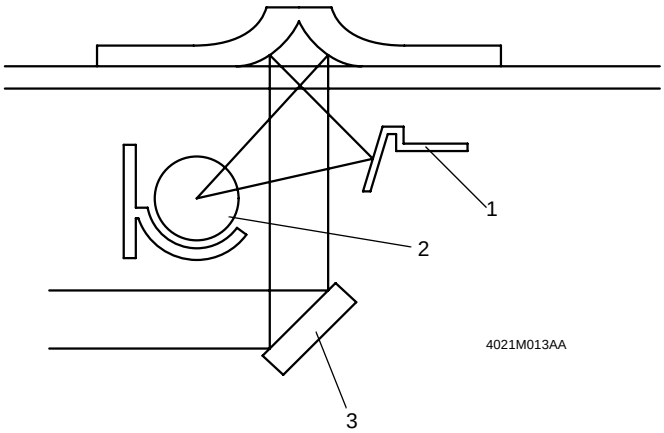

1. Auxiliary Reflector
   When a book or other bound original is copied, the paper in the area near the binding generally fails to come flush against the glass, so that the copy of these areas is generally too dark. The Auxiliary Reflector reduces this problem by reflecting light from the Exposure Lamp onto these areas of the original.
2. Exposure Lamp LA2
   A fluorescent lamp is used to illuminate the original.
3. 1st Mirror
   Directs the light reflected off the original to the 2nd Mirror.

10-3. Scanner and Mirrors Carriage Movement Mechanism

(1) Scanner Movement Mechanism

- The Scanner is driven by the Scanner Motor.

(2) 2nd/3rd Mirrors Carriage Movement Mechanism

- The 2nd/3rd Mirrors Carriage moves at a speed half that of the Scanner, thereby keeping constant the optical path length between the original and the CCD Board.

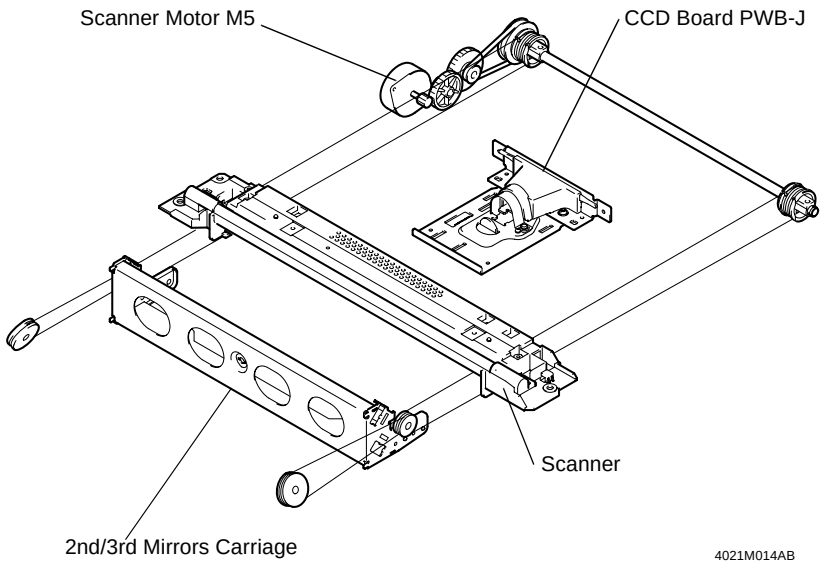

10-4. Scanner Motor Drive Control

- The speed at which the Scanner is moved is controlled by varying the period of the motor drive pulse that is timed with the reference clock.

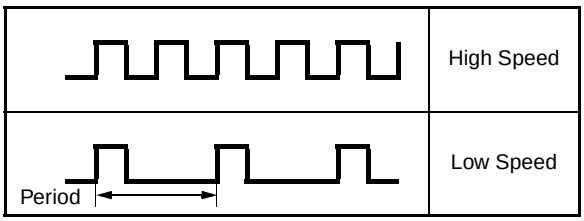

- The distance over which the Scanner travels is controlled by the number of motor drive pulses that correspond to each paper size and zoom ratio.

Elevtrical Component	Control Signal	ON	OFF	Wiring Diagram
M5	PWB-C JP5C-1 to 4	Pulse output		11-B

11. MEMORY STORAGE IMAGE PROCESSING SYSTEM

- Based on the image data output from the IR, a laser light is projected onto the surface of the PC Drum to form a corresponding latent image.

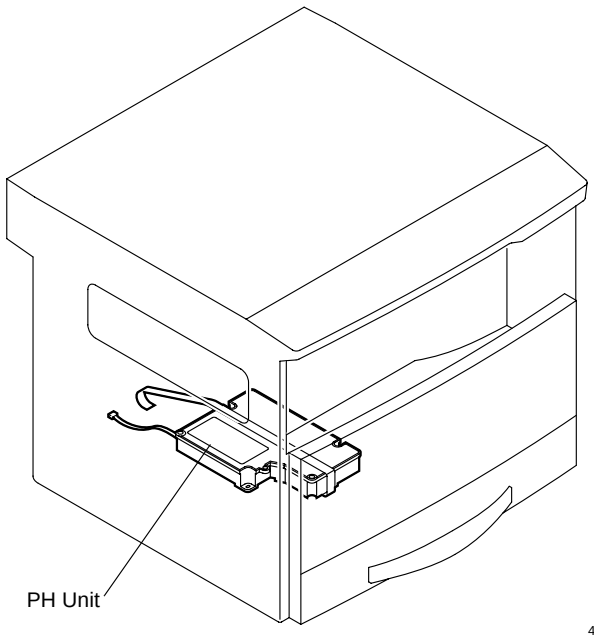

4021M015AA

11-1. Laser Exposure Process

1. The Start key is pressed.
2. The laser diode is forced to turn ON and the laser intensity is automatically adjusted.
3. The SOS Sensor Board is illuminated by the laser beam, which generates an SOS signal.
4. The SOS signal determines the laser emission timing for each main scanning line.
5. The surface of the PC Drum is illuminated by the laser beam corresponding to the image data, which forms an electrostatic latent image.

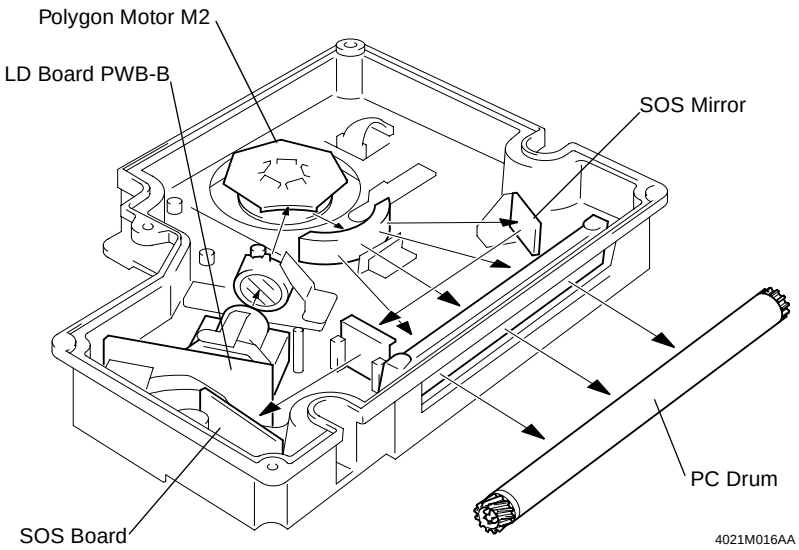

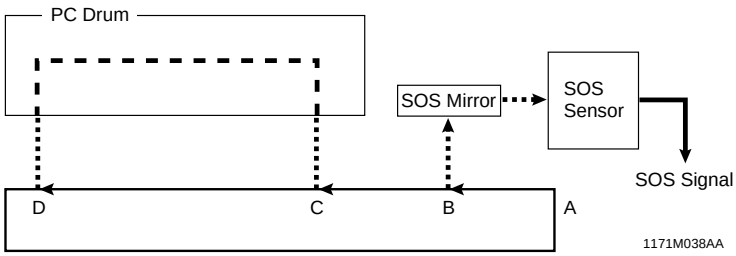

A to B: LD activation
B to C: LD OFF
C to D: Laser beam exposure area according to the image data

Elevtrical Component	Control Signal	ON	OFF	Wiring Diagram
M2	PWB-A PJ13A-3	L	H	8-D

12. DEVELOPING UNIT SECTION

The Developing Unit agitates and triboelectrically charges toner so that it sticks to the electrostatic latent image formed on the surface of the PC Drum, then changing the image to a visible, developed one.

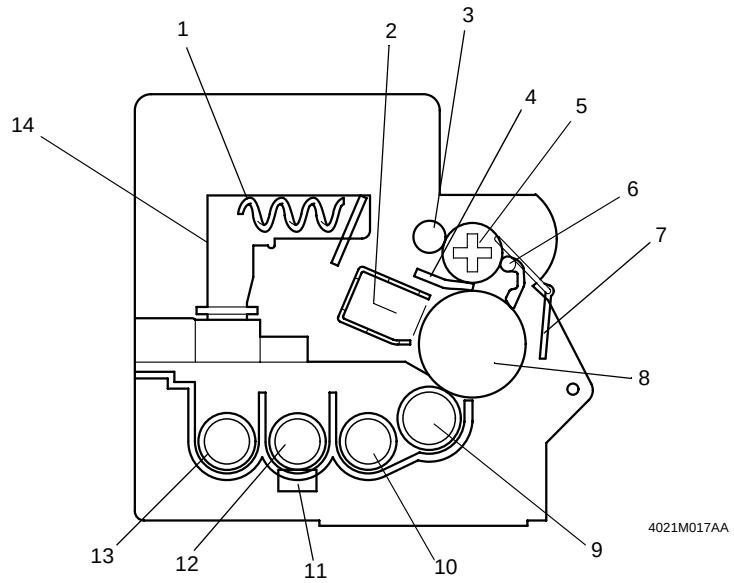

1. Spent Toner Recycling Coil
2. PC Drum Charge Corona
3. Spent Toner Conveying Screw 2
4. Cleaning Blade
5. Spent Toner Conveying Screw 1
6. PC Drum Paper Separator Finger
7. PC Drum Protective Shutter
8. PC Drum
9. Sleeve/Magnet Roller
10. 1st Toner Conveying Roller
11. ATDC Sensor UN1
12. 2nd Toner Conveying Roller
13. 3rd Toner Conveying Roller
14. Spent Toner Recycling Duct

12-1. Developing Unit Drive Mechanism

The rollers are driven through a gear train from the motor.

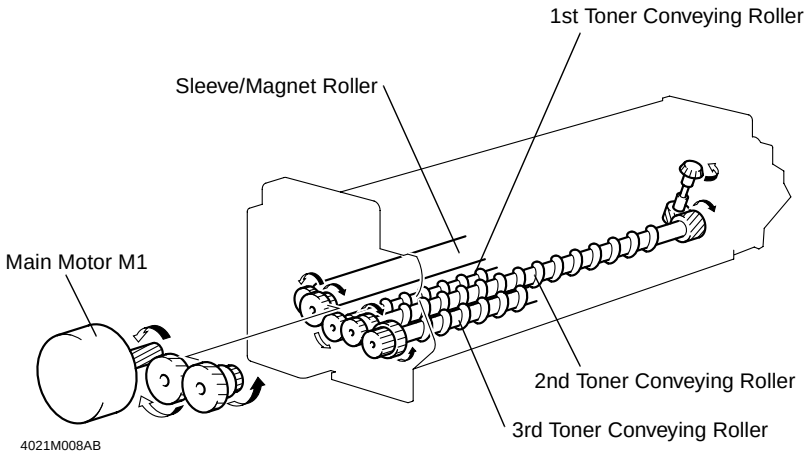

Elevtrical Component	Control Signal	Forward Rotation	OFF	Wiring Diagram
M1	PWB-A PJ7A-5	L	H	17-G
	PWB-A PJ7A-7	H	H	

12-2. Sleeve/Magnet Roller

- The Sleeve/Magnet Roller, which consists of an outer sleeve roller and an inner magnet roller, conveys developer to the point of development.
- The magnetic force of the magnet roller at the point of development is the strongest so that the developer brush stands straight up to deliver the greatest amount of toner to the point of development.

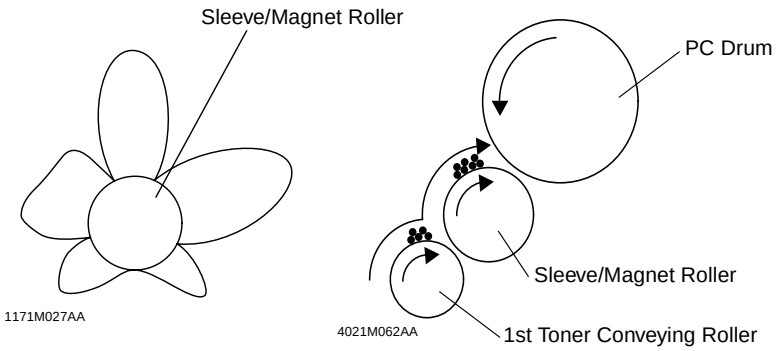

12-3. Developing Bias

- Vb (-DC, AC) is applied to the Sleeve/Magnet Roller.
- Vb (-DC) is applied to prevent toner from sticking to the background of the image.
- Vb (AC) is applied to enhance good separation of toner from carrier.
- The amount of toner sticking to the surface of the PC Drum is varied according to the difference in potential between the voltage (Vi) on the surface of the PC Drum and Vb (-DC).

✻ Large difference = A greater amount of toner sticks.
✻ Small difference = A smaller amount of toner sticks.

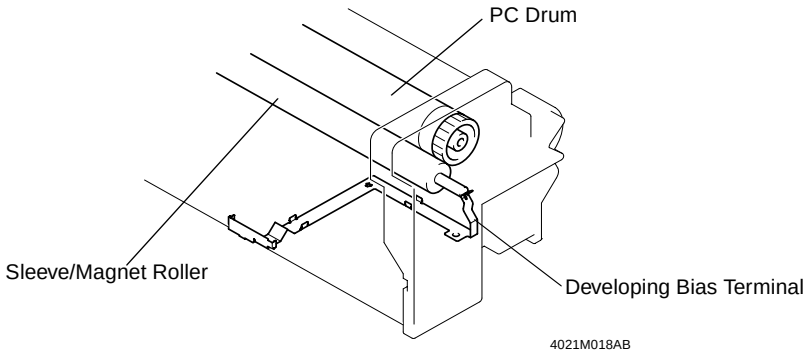

Elevtrical Component	Control Signal	ON	OFF	Wiring Diagram
Vb (-DC)	PWB-A PJ8A-9	L	H	6-B
Vb (AC)	PWB-A PJ8A-10	L	H	

12-4. ATDC Sensor

The ATDC Sensor detects the toner-to-carrier ratio (T/C) of the developer in the Developer Mixing Chamber.

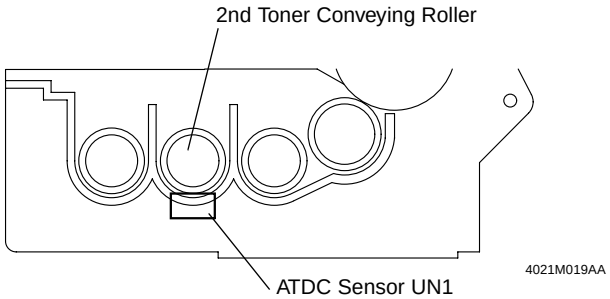

(1) ATDC Sensor Automatic Adjustment

The reference value for the ATDC Sensor is automatically adjusted as detailed below using the ATDC Sensor Automatic Adjustment mode.

With the copier set in the ATDC Sensor Automatic Adjustment mode, press the Start key.

↓

The developer is mixed.

↓

The ATDC Sensor converts the reference T/C (14 %) to a corresponding voltage value and outputs it.

↓

Does the output voltage fall within the range from 2.36 to 2.44 V?

YES

The voltage input to the ATDC Sensor from the Master Board at this time is fixed as the reference voltage.

NO

The voltage input to the ATDC Sensor from the Master Board is varied.
2.45 V or more: Decrease the voltage.
2.35 V or less: Increase the voltage.

12-5. Toner Replenishing Mechanism

- Toner is supplied from the Toner Bottle to the Developer Mixing Chamber.

1. The coupling is turned by the motor, which turns the Toner Bottle.
2. To regulate the amount of toner supplied from the Toner Bottle, there is a Metering Chamber provided in the outer race of the coupling.
3. When the Toner Bottle turns, toner in the Metering Chamber drops.
4. Toner from the metering chamber is conveyed by the Toner Conveying Screw into the Developer Mixing Chamber.
5. The Toner Conveying Screw is turned by the motor.

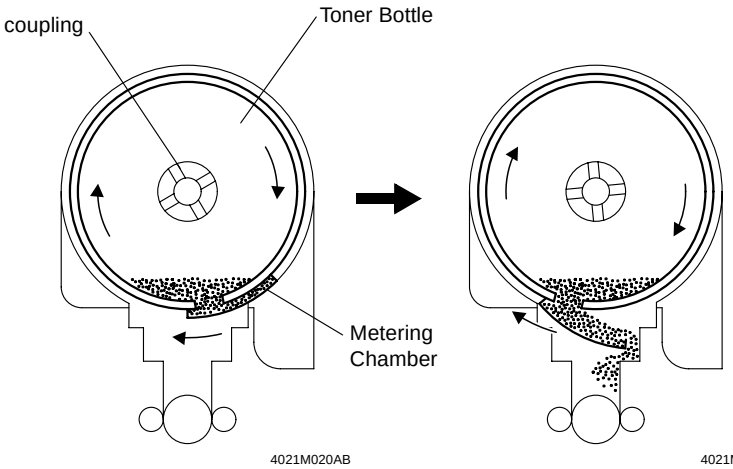

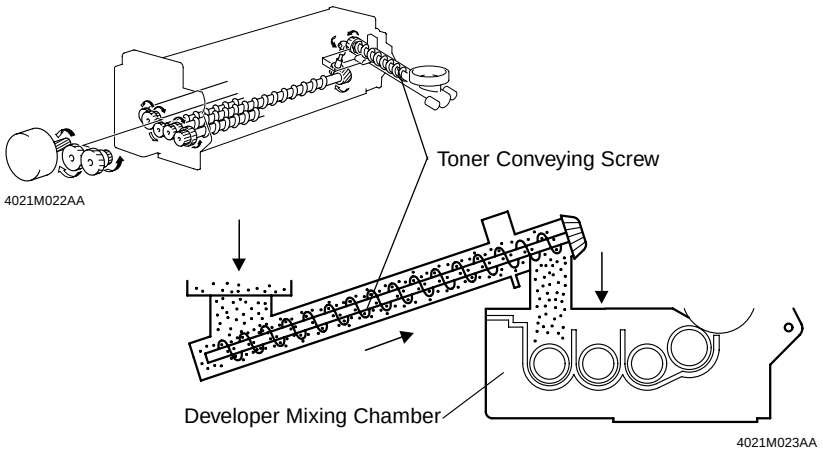

Elevtrical Component	Control Signal	ON	OFF	Wiring Diagram
M6	PWB-A PJ19A-6	L	H	4-B

12-6. Toner Replenishing Control

- Replenishing of the supply of toner is determined based on the T/C ratio and B/W ratio.
- If T/C is 14 % or more, toner replenishing is not carried out regardless of the B/W value.
- If T/C is less than 14 %, toner replenishing is determined according to the B/W value.
- Toner is replenished until T/C becomes 14 %.

T/C ratio (%)	B/W ratio	toner replenishing
More than 14	—	not supply
13.5 to 14	More than 2000	supply
13 to 13.5	More than 1000	supply
12.5 to 13	More than 500	supply
12 to 12.5	More than 500	supply
10 to 12	More than 0	supply
Less than 7	Proceeds to the T/C recovery mode	

✻ The greater the value of B/W in the table, the higher the B/W ratio (high image density original).

12-7. T/C Recovery Mode

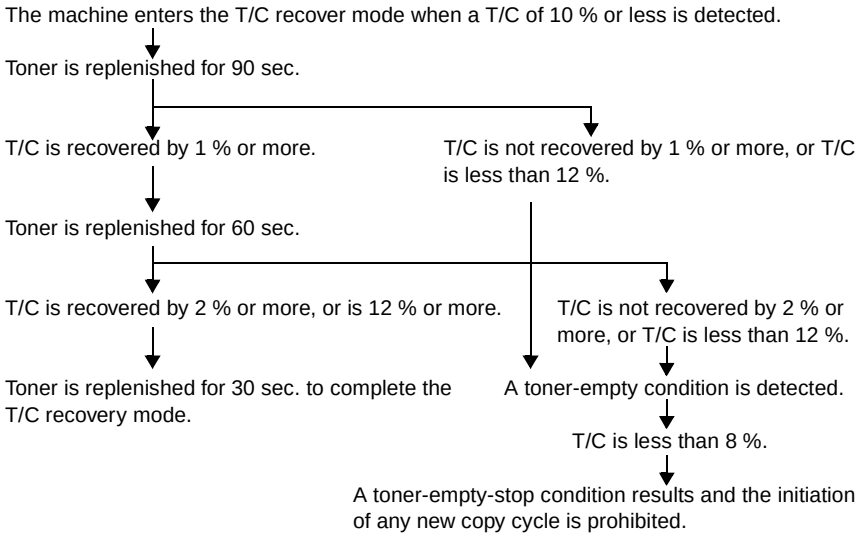

✻ A toner-empty condition is reset when the Front Cover is opened and closed after a T/C of 10 % or more is detected with the supply of toner replenished.

✻ A toner-empty-stop condition is reset when the Front Cover is opened and closed after a T/C of 8 % or more is detected with the supply of toner replenished. A toner-empty condition results, however, if T/C falls within the range between 8 % and 10 % when the Front Cover is opened and closed.

12-8. Toner Bottle Home Position Detection Mechanism

- The Toner Bottle is at its home position (where it remains stationary) when its Toner Supply Port faces up. This position is detected by a sensor.

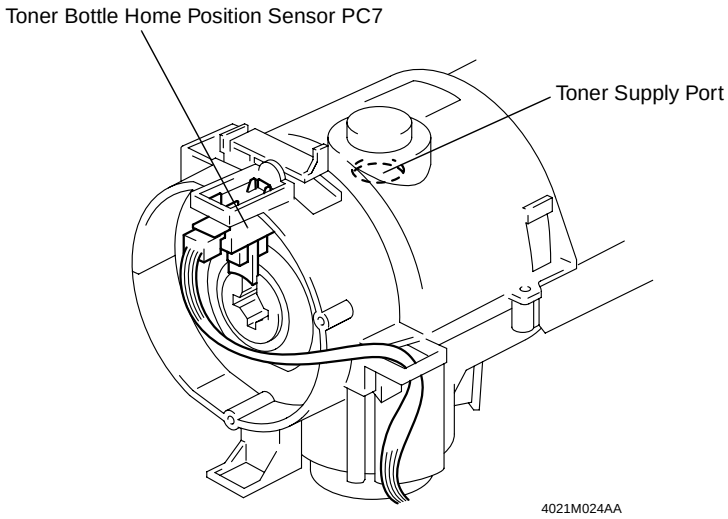

Elevtrical Component	Control Signal	Activated	Deactivated	Wiring Diagram
PC7	PWB-A PJ19A-10	L	H	4-B

13. PAPER TAKE UP/FEED SECTION

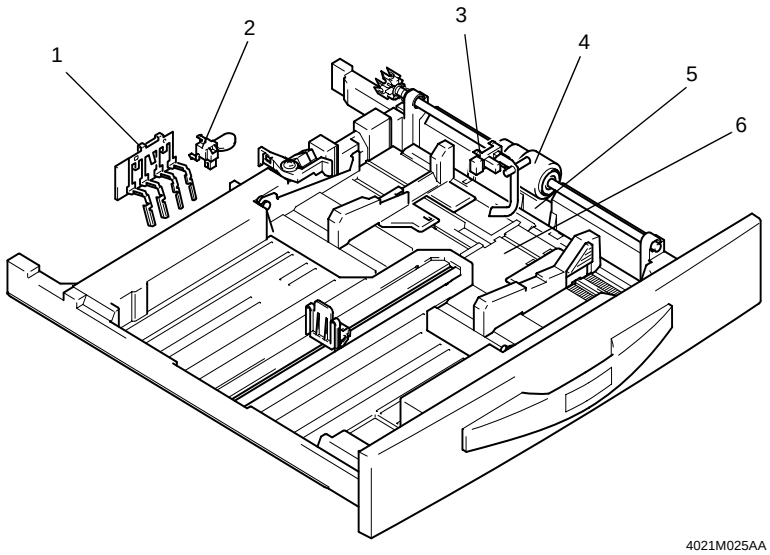

1. Paper Size Detecting Board PWB-I
2. Paper Size Detecting Sensor S11
3. Paper Empty Sensor PC4
4. Paper Take-Up Roll
5. Separator Roll
6. Paper Lifting Plate

13-1. Drawer In Position Detection

- When the drawer is slid into the copier, the light blocking plate blocks the Set Sensor. The copier then knows that the drawer has been slid in position.

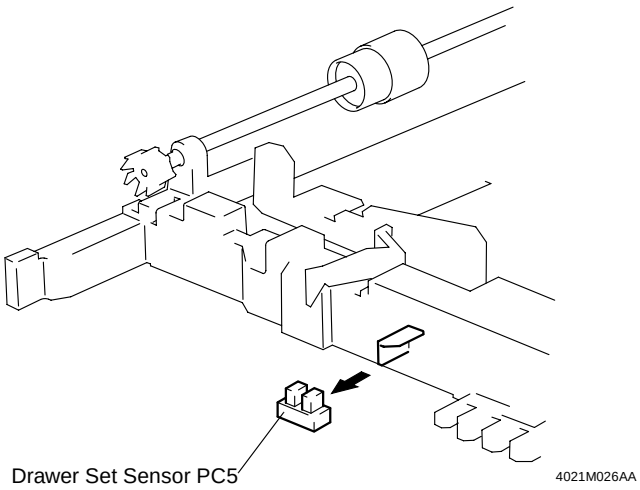

Elevtrical Component	Control Signal	Activated	Deactivated	Wiring Diagram
PC5	PWB-A PJ15A-10	L	H	1-I

13-2. Paper Empty Detection Mechanism

- The Paper Empty Sensor detects a paper-empty condition in the drawer.

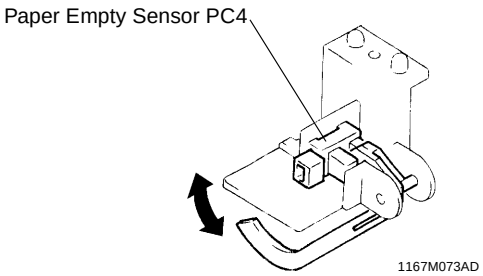

Elevtrical Component	Control Signal	Activated	Deactivated	Wiring Diagram
PC4	PWB-A PJ6A-6	L	H	1-I

13-3. Paper Lifting Plate

- The Paper Lifting Plate is locked into position when it is pressed down. It is unlocked when the tray is slid into the unit.
- The Paper Lifting Plate is pushed upward by the Paper Lifting Springs at all times.

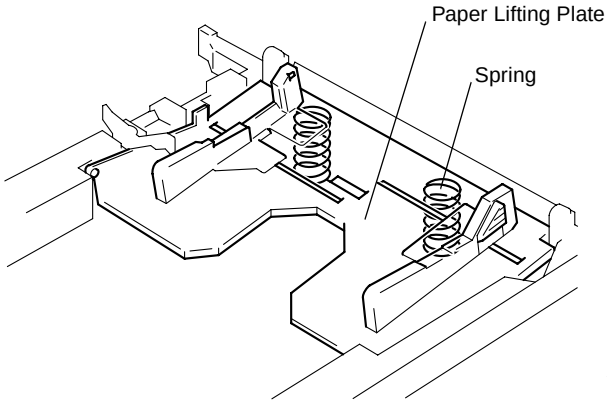

4021M063AA

13-4. Universal Tray Paper Size Detection Mechanism

- Both the width (in the crosswise direction) and length (in the feeding direction) of the paper are detected and the copier CPU determines the paper size based on the combination of the two readings.
- The width (CD) of the paper is detected when the lever that is operatively connected to the Edge Guide activates or deactivates the Paper Size (CD) Detection Sensor.
- The length (FD) of the paper is detected when the lever that is operatively connected to the Trailing Edge Stop actuates or deactuates the switches on the Paper Size (FD) Detection Board.

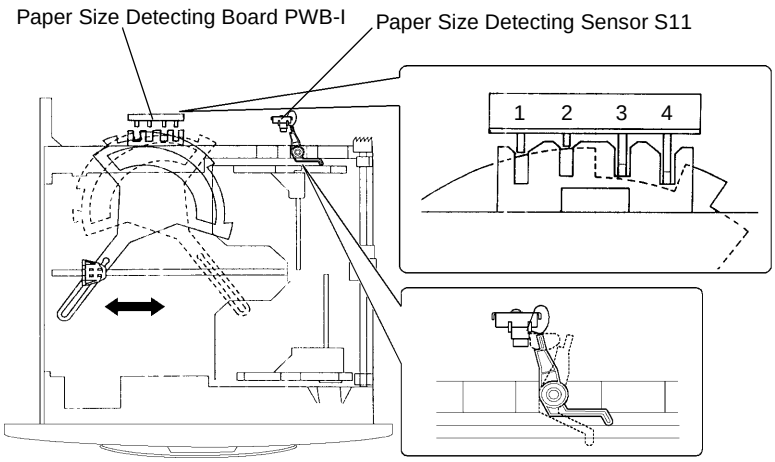

4011M009AA

Paper Size Detecting Board PWB-I				Paper Size Detecting Sensor S11	Paper Size
SW1	SW2	SW3	SW4		
—	—	—	—	—	B4L, 8-1/2 × 14
—	—	—	—	Activated	11 × 14
—	—	—	ON	Activated	A3L, 11 × 17
—	—	ON	ON	—	A5L, 5-1/2 × 8-1/2 L
—	—	ON	ON	Activated	A4C, 8-1/2 × 11 C
—	ON	—	—	—	A5C, 5-1/2 × 8-1/2 C
—	ON	ON	ON	—	A5L, 5-1/2 × 8-1/2 L
—	ON	ON	ON	Activated	A4C, 8-1/2 × 11 C
ON	—	—	—	—	FLS
ON	ON	—	—	—	FLS
ON	ON	ON	ON	—	A4L, 8-1/2 × 11 L

Elevtrical Component	Control Signal	ON	OFF	Wiring Diagram
PWB-I SW1	PWB-A PJ15A-1	L	H	2-H
PWB-I SW2	PWB-A PJ15A-2	L	H	
PWB-I SW3	PWB-A PJ15A-3	L	H	
PWB-I SW4	PWB-A PJ15A-4	L	H	

Elevtrical Component	Control Signal	Activated	Deactivated	Wiring Diagram
S11	PWB-A PJ15A-7	H	L	1-H

13-5. Paper Take Up Mechanism

- Drive for the paper take-up sequence is transmitted via the Paper Take-Up Solenoid from a motor.

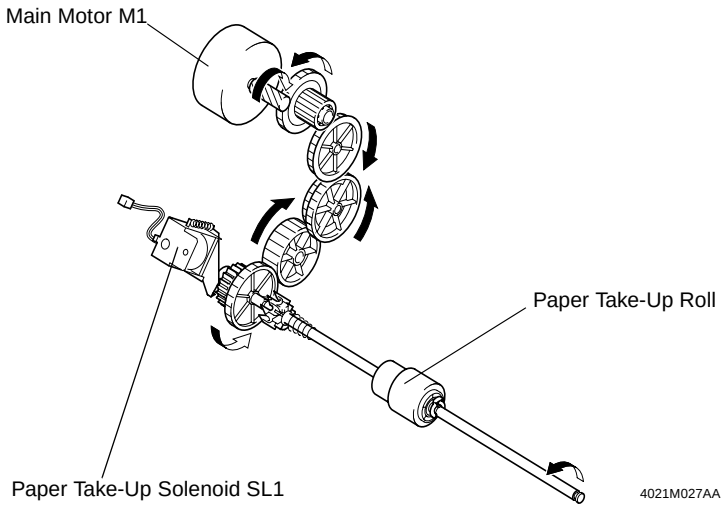

(1) Paper Separating Mechanism

- The coefficient of friction between the Paper Take-Up Roll and Separator Roll is effectively used to prevent double feed of paper.

When one sheet of paper is taken up: The coefficient of friction on the front side of the sheet of paper taken up and fed through the space between the Paper Take-Up Roll and Separator Roll is the same as that on the backside of the sheet of paper, allowing the paper to be properly fed into the machine.

When two or more sheets of paper are taken up: The coefficient of friction between the paper and the Separator Roll is greater than that between the sheets of paper, which allows only the top sheet of paper to be fed into the machine.

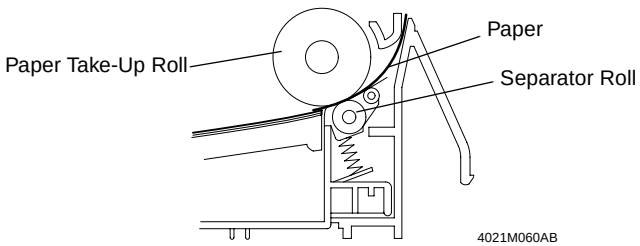

13-6. Paper Take Up Control

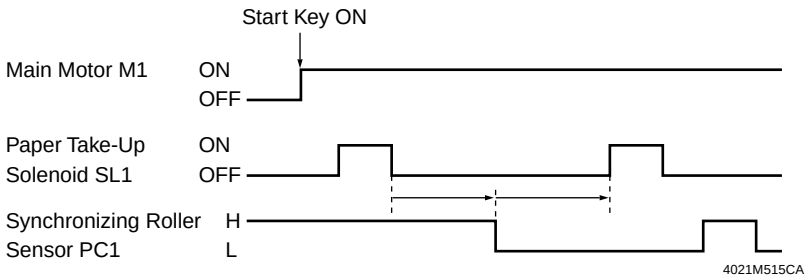

Elevtrical Component	Control Signal	Forward Rotation	OFF	Wiring Diagram
M1	PWB-A PJ7A-5	L	H	17-G
	PWB-A PJ7A-7	H	H	

Elevtrical Component	Control Signal	ON	OFF	Wiring Diagram
SL1	PWB-A PJ5A-2	L	H	1-I

Elevtrical Component	Control Signal	Activated	Deactivated	Wiring Diagram
PC1	PWB-A PJ6A-3	L	H	1-F

(1) Paper Take Up Retry Control

- To minimize the occurrence of a paper misfeed, the paper take-up sequence is temporarily halted if the paper fails to reach the Synchronizing Roller Sensor within a given period of time after the sequence has been started. The paper take-up sequence is then performed again. These paper take-up sequences are repeated a given number of times.

	No. of Paper Take-Up Retry Sequences
Paper Take-Up Retry	2

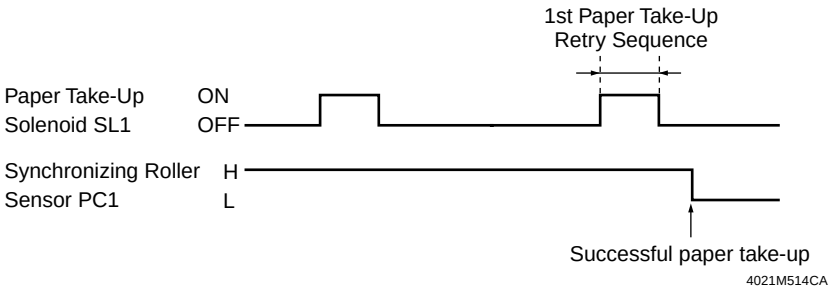

14. MANUAL BYPASS SECTION

14-1. Paper Take Up Drive Mechanism

- Drive for paper take-up from the Manual Bypass is transmitted from a motor via the Solenoid.

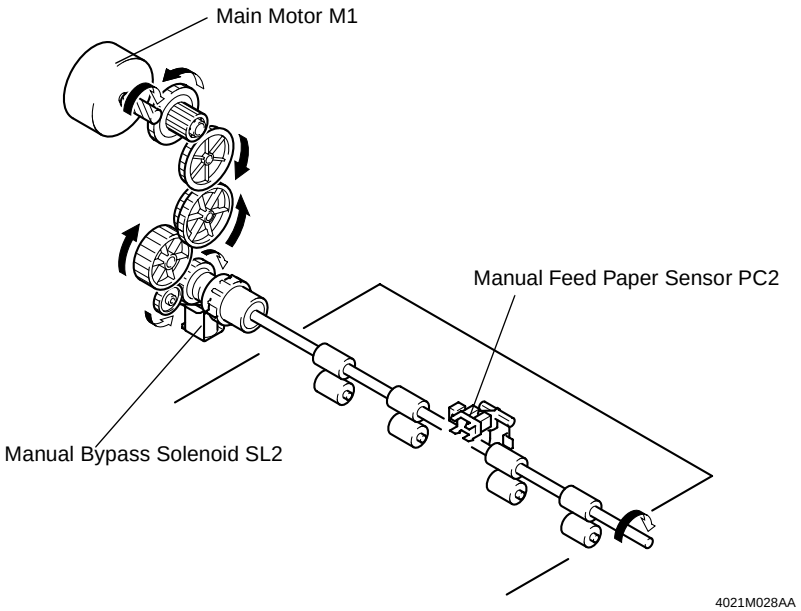

14-2. Paper Detection Mechanism

- The Sensor detects a sheet of paper on the Manual Bypass.

<When Paper is Present>

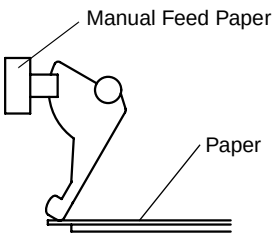

<When Paper is not Present>

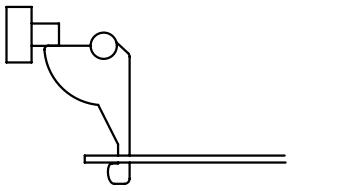

14-3. Manual Feed Take Up Control

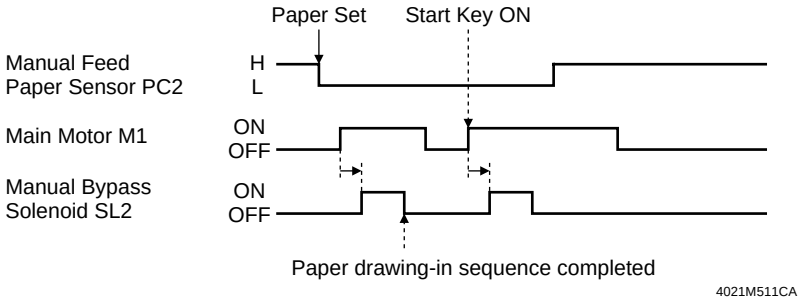

Elevtrical Component	Control Signal	Forward Rotation	OFF	Wiring Diagram
M1	PWB-A PJ7A-5	L	H	17-G
	PWB-A PJ7A-7	H	H	

Elevtrical Component	Control Signal	ON	OFF	Wiring Diagram
SL2	PWB-A PJ4A-2	L	H	1-B

Elevtrical Component	Control Signal	Activated	Deactivated	Wiring Diagram
PC2	PWB-A PJ4A-5	L	H	1-A

15. MULTIPLE BYPASS SECTION

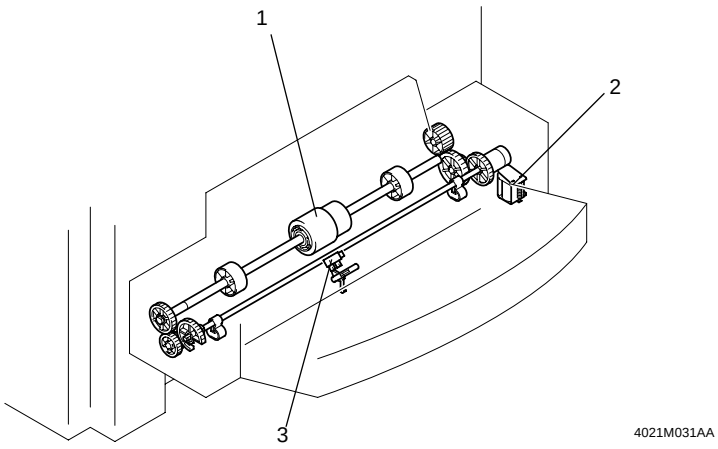

1. Paper Take-Up Roll
2. Multiple Bypass Solenoid SL21
3. Multiple Bypass Paper Empty Sensor PC21

15-1. Paper Take Up Drive Mechanism

- Drive for paper take-up from the Multiple Bypass is transmitted from a motor via the Solenoid.

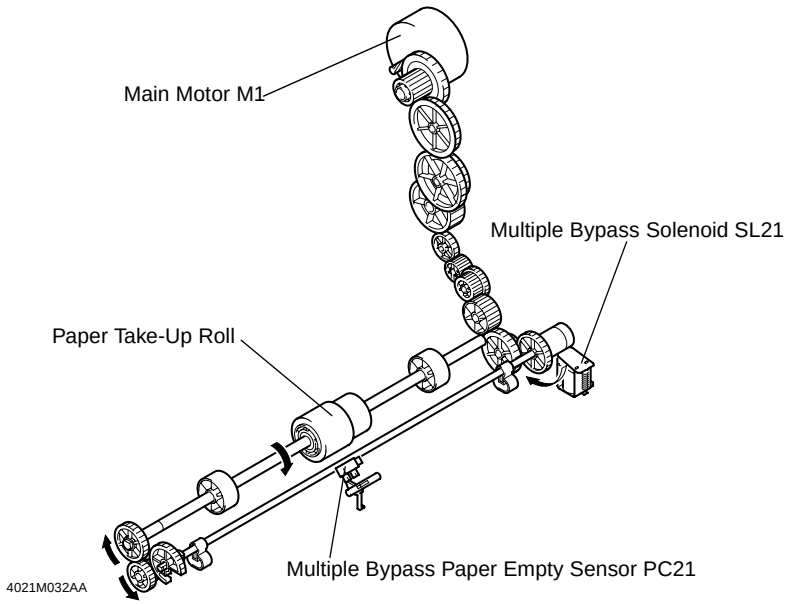

15-2. Paper Take-Up Mechanism

- The Paper Lifting Plate is raised to press the paper stack on the tray up against the Paper Take-Up Roll.
- The Paper Lifting Plate is raised and lowered in time with a paper take-up sequence.
- The ascent and descent motion of the Paper Lifting Plate is accomplished when the drive from the motor is transmitted to the cam through a solenoid to rotate the cam.

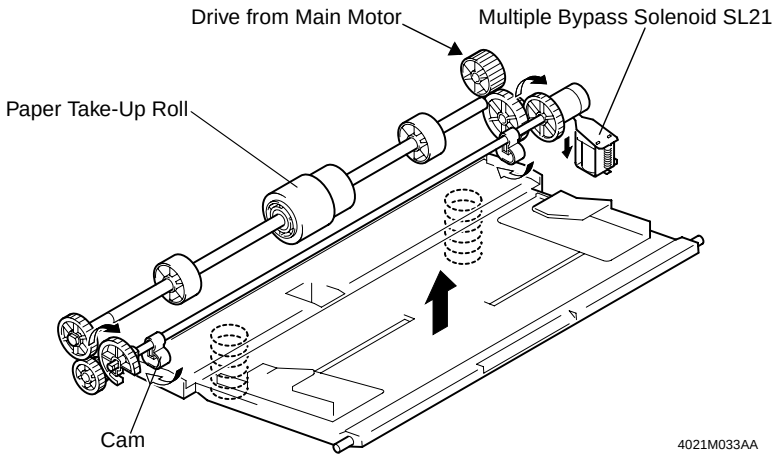

<Ascent/Descent Motion>
Main Motor (M1) is energized.
Paper Take-Up Roll is turned.

Multiple Bypass Solenoid (SL21): Energized
↓
Cam: Rotates
↓
Tray: Raised
↓
Multiple Bypass Solenoid (SL21): Deenergized
↓
Paper take-up
↓
Multiple Bypass Solenoid (SL21): Energized
↓
Cam: Rotates
↓
Tray: Lowered
↓
Multiple Bypass Solenoid (SL21): Deenergized

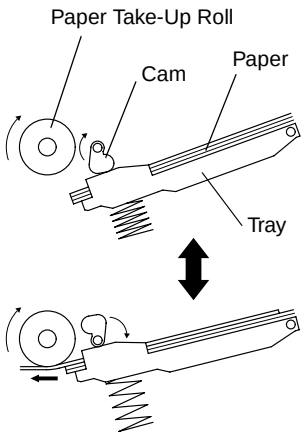

15-3. Paper Empty Detection Mechanism

- The Paper Empty Sensor detects a sheet of paper on the Multiple Bypass.

<When Paper is Present> <When Paper is not Present>

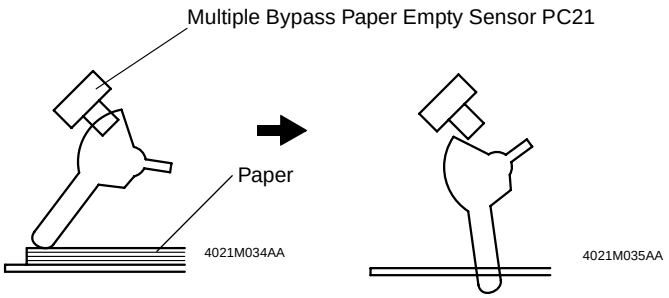

15-4. Paper Take Up Control

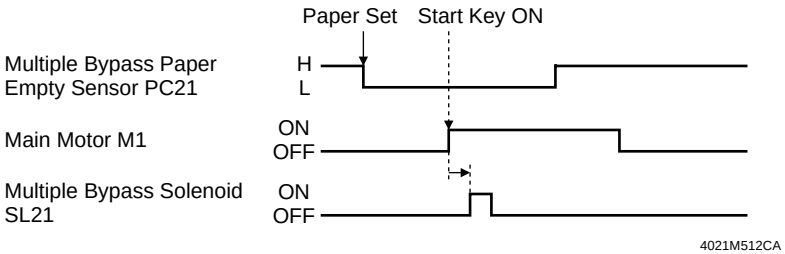

Elevtrical Component	Control Signal	Forward Rotation	OFF	Wiring Diagram
M1	PWB-A PJ7A-5	L	H	17-G
	PWB-A PJ7A-7	H	H	

Elevtrical Component	Control Signal	ON	OFF	Wiring Diagram
SL21	PWB-A PJ4A-2	L	H	17-F

Elevtrical Component	Control Signal	Activated	Deactivated	Wiring Diagram
PC21	PWB-A PJ4A-5	L	H	17-F

15-5. Paper Take Up Retry Control

- To minimize the occurrence of a paper misfeed, the paper take-up sequence is temporarily halted if the paper fails to reach the Synchronizing Roller Sensor within a given period of time after the sequence has been started. The paper take-up sequence is then performed again. These paper take-up sequences are repeated a given number of times.

	No. of Paper Take-Up Retry Sequences
Paper Take-Up Retry	2

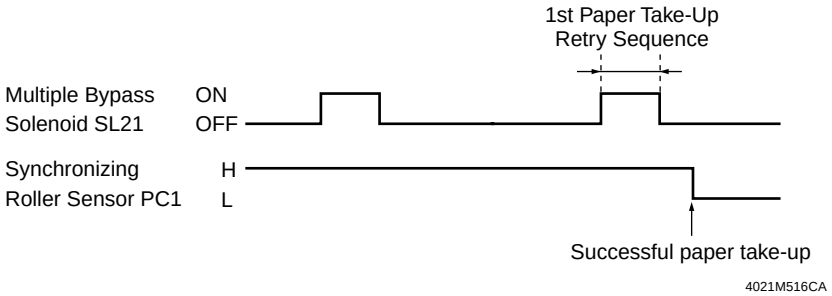

16. IMAGE TRANSFER AND PAPER SEPARATION SECTION

✻ Image Transfer
- A positive charge is applied to the Image Transfer Roller to transfer the toner image formed on the surface of the PC Drum onto the paper.
- The charge applied to the Image Transfer Roller is varied according to the following conditions to ensure that image transfer efficiency is stabilized.
  Paper Type: The amount of charge is made less for OHP transparencies.
  Paper width: The greater the paper width, the more the amount of charge.
  B/W ratio of the image: The higher the B/W ratio, the more the amount of charge.
- A negative charge is applied to the Image Transfer Roller to return toner sticking to the Image Transfer Roller to the PC Drum. It is performed in the following timings:
- A copy cycle is started and completed, The Power Switch is turned ON, A misfeed or a malfunction is reset.

✻ Paper Separation
- The PC Drum Paper Separator Fingers mechanically separate paper from the surface of the PC Drum to ensure good and positive paper separation.
- The Charge Neutralizing Plate is used to neutralize any charge left on the paper, to which image has been transferred, thereby preventing discharge noise that occurs when paper is separated.

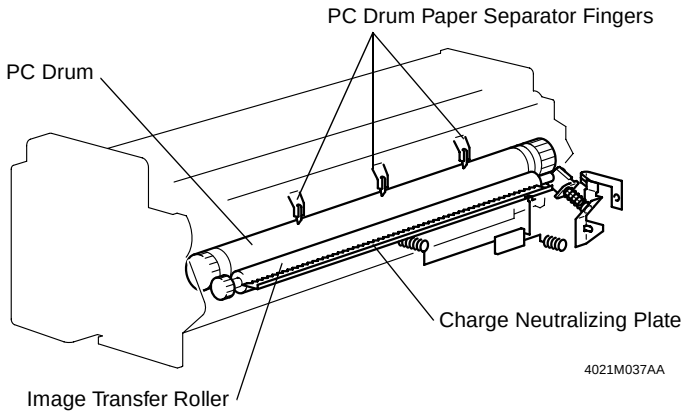

Elevtrical Component	Control Signal	ON	OFF	Wiring Diagram
HV1	PWB-A PJ8A-8	L	H	6-C

17. PC DRUM CLEANING SECTION

- The Cleaning Blade is used to scrape residual toner off the surface of the PC Drum.
- The spent toner is conveyed through the Recycling Duct and eventually back to the Developer Mixing Chamber.
- To prevent paper dust from being compacted on the edge of the Cleaning Blade, the PC Drum is turned backward (by turning the Main Motor backward) when the cumulative time through which the PC Drum has turned reaches a predetermined value. When the PC Drum is turned backward, a backlash in gears prevents drive from being transmitted to other drive mechanisms.

Cumulative Time Through Which PC Drum Has Been Driven	PC Drum Backward Rotation Time
Approx. 330 sec	50 ms

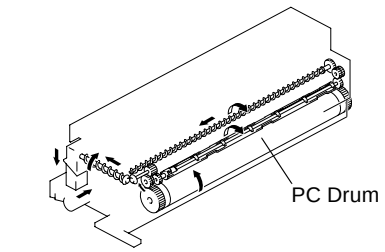

4021M039AA

4021M038AB

18. MAIN ERASE SECTION

- Any potential remaining on the surface of the PC Drum is neutralized by both light from the Main Erase and a negative voltage applied by the Charge Neutralizing Sheet.
- A negative charge is applied to the Charge Neutralizing Sheet to neutralize a positive charge on the surface of the PC Drum. The Main Erase then illuminates the surface of the PC Drum to neutralize the charge left on it.

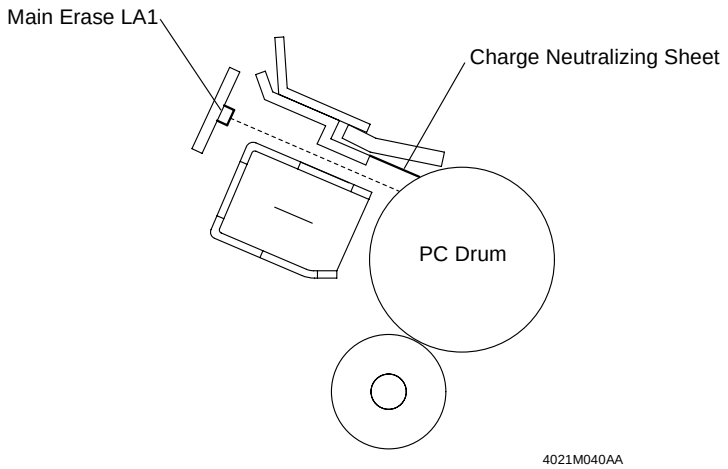

Elevtrical Component	Control Signal	ON	OFF	Wiring Diagram
LA1	PWB-A PJ7A-12	L	H	4-A

19. FUSING UNIT SECTION

- The Fusing Unit fixes permanently the developed image to the paper by applying heat and pressure to the toner and paper.

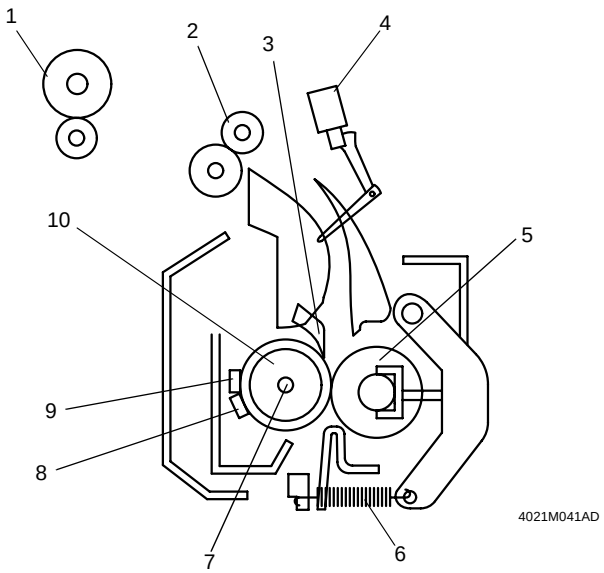

1. Paper Exit Roller
2. Transport Roller
3. Fusing Paper Separator Finger
4. Exit Paper Sensor PC3
5. Right Fusing Roller
6. Pressure Spring
7. Fusing Heater Lamp H1
8. Thermistor TH1
9. Thermoswitch TS1
10. Left Fusing Roller

19-1. Fusing Unit Drive Mechanism

- The Fusing Unit is driven by a motor.

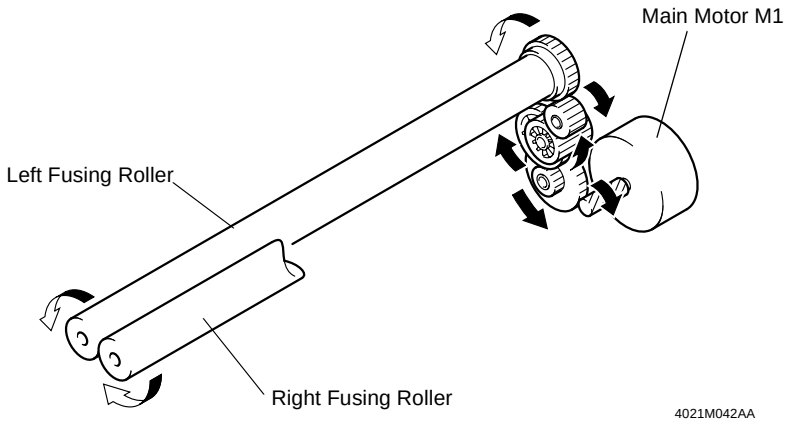

19-2. Fusing Rollers Pressure Mechanism

- To ensure that there is a certain width of area of contact between the Right and Left Fusing Rollers, a pressure spring is used to press the Lower Fusing Roller up against the Upper Fusing Roller.

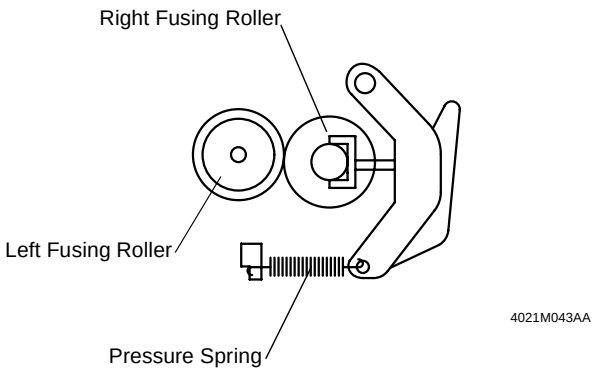

19-3. Fusing Temperature Control

- The Fusing Roller Heater Lamp is turned ON and OFF to keep a set temperature on the surface of the Fusing Roller.
- The Fusing Roller surface temperature is detected by using a thermistor that translates the temperature to a corresponding electrical signal.
- If the Fusing Roller temperature becomes excessively high, the Fusing Roller Heater Lamp is shut down.

<Temperature Control in Standby State>

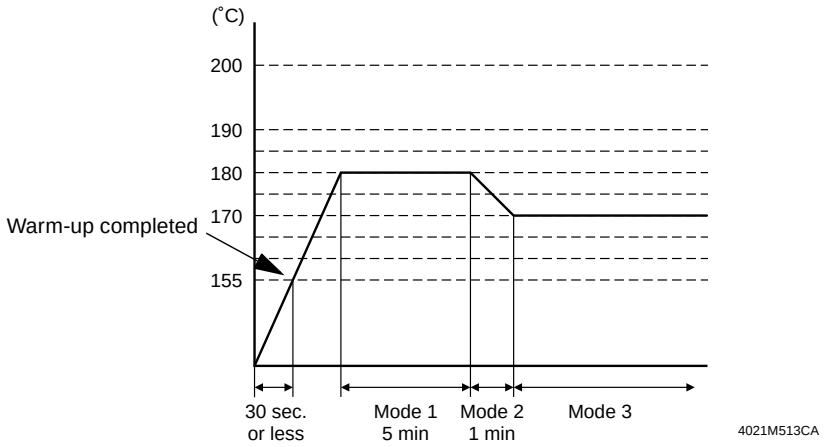

Machine Condition or Paper Type	Mode 1	Mode 2	Mode 3
Standby	180 °C	180 °C → 170 °C	170 °C
Plain paper (width 251 mm or more)	190 °C	190 °C → 170 °C	170 °C
Plain paper (width 250 mm or less)	160 °C	160 °C	160 °C
Thick paper (width 251 mm or more)	210 °C	210 °C → 190 °C	190 °C
Thick paper (width 250 mm or less)	200 °C	200 °C → 190 °C	190 °C
OHP transparencies (width 251 mm or more)	180 °C	180 °C → 165 °C	165 °C
OHP transparencies (width 250 mm or less)	155 °C	155 °C	155 °C

Elevtrical Component	Control Signal	ON	OFF	Wiring Diagram
H1	PWB-A PJ10A-7	L	H	1-D

19-4. CPM Control

- If paper of a small size (width of 250 mm or less) or thick paper is used to run a multi-copy cycle, the temperature on the edges of the Fusing Rollers tends to run high, meaning that the temperature of the Fusing Rollers varies among different spots of the rollers.
- When the cumulative number of copies made through continuous copy cycles* exceeds 30, the paper take-up interval is made longer, thereby allowing the temperatures of the Fusing Rollers at different spots to be uniform.

✻ Continuous copy cycle: Continuous copy cycles run with an interval of 2 min. or less between cycles.

20. JOB TRAY (JS-202): Option

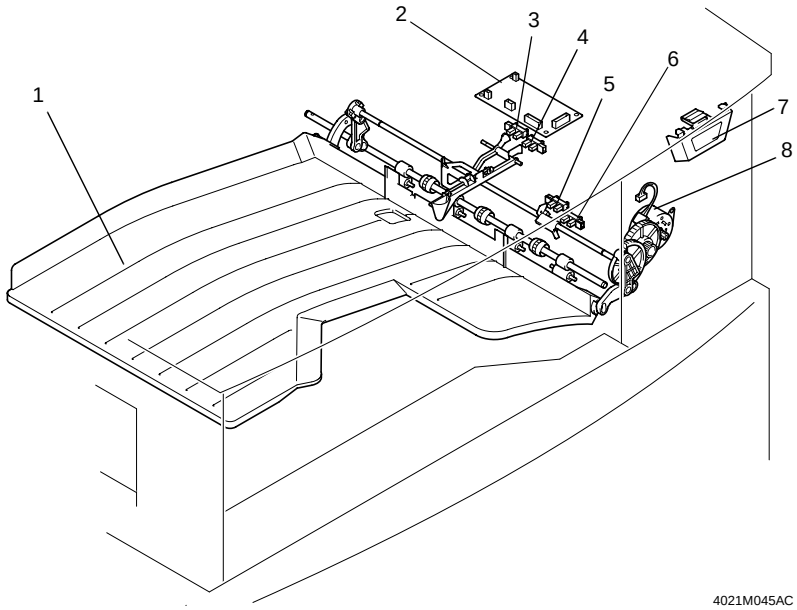

1. Job Tray
2. Main Board PWB-A
3. Paper Empty Sensor PC35
4. Full Detecting Sensor PC34
5. Upper Home Position Sensor PC32
6. Lower Home Position Sensor PC33
7. Paper Detecting Board PWB-B
8. Bin Switching Motor M1

20-1. Tray Selecting Mechanism

- Paper is fed into either the Exit Tray of the machine or the Job Tray. Either is selected according to the application mode (fax, copier, or printer).
- The specific tray in which paper is fed is selected by a motor and a sensor.

<When feeding paper into the Exit Tray: Copier>

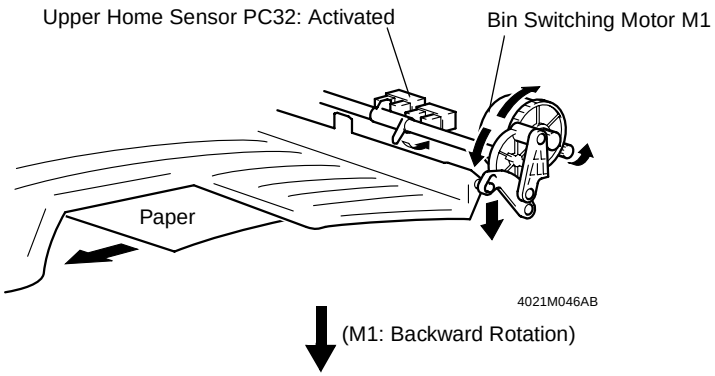

<When feeding paper into the Job Tray: fax/printer>

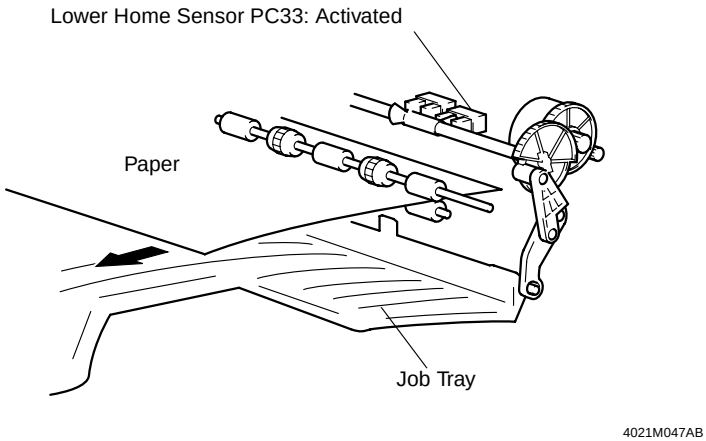

Elevtrical Component	Control Signal	ON	OFF	Wiring Diagram
M1	PWB-A PJ2A-1 to 4	Pulse output		16-A

Elevtrical Component	Control Signal	Activated	Deactivated	Wiring Diagram
PC32	PWB-A PJ4A-3	L	H	16-B
PC33	PWB-A PJ4A-6	L	H	

20-2. Tray-Full Detecting Mechanism

- Tray-full detection is valid only when paper is fed into the Job Tray (Job Tray in the lowered position).
- A tray-full condition is detected when the sensor is blocked for a continuous given period of time (approx. 20 sec.).

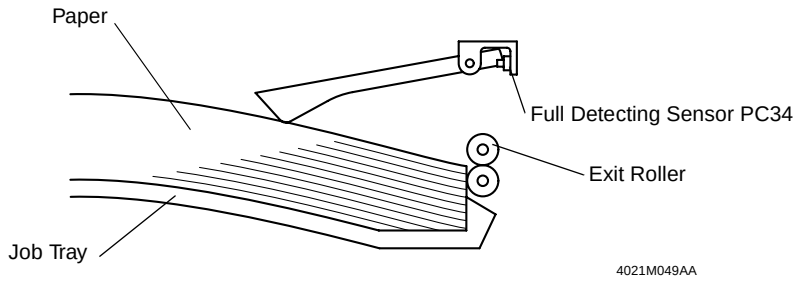

Elevtrical Component	Control Signal	Activated	Deactivated	Wiring Diagram
PC34	PWB-A PJ4A-9	L	H	16-C

20-3. Job Tray Paper Detecting Mechanism

- If paper is fed into the Job Tray when the machine is in a mode in which paper is fed into the Exit Tray (Job Tray in the raise position), the indicator lamp on the Paper Detecting Board lights to warn the user that there is paper in the Job Tray.
- A sensor is provided for detecting paper in the Job Tray.

<When Paper is Present>

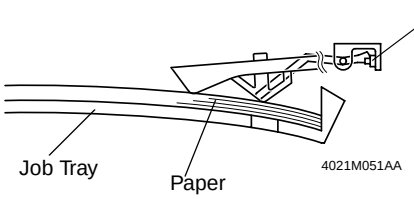

<When Paper is not Present>

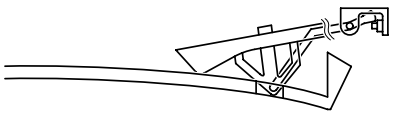

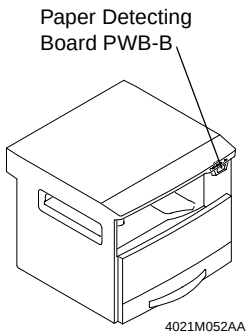

Elevtrical Component	Control Signal	Activated	Deactivated	Wiring Diagram
PC35	PWB-A PJ3A-3	L	H	18-A

21. SHIFTING UNIT (OT-103): Option

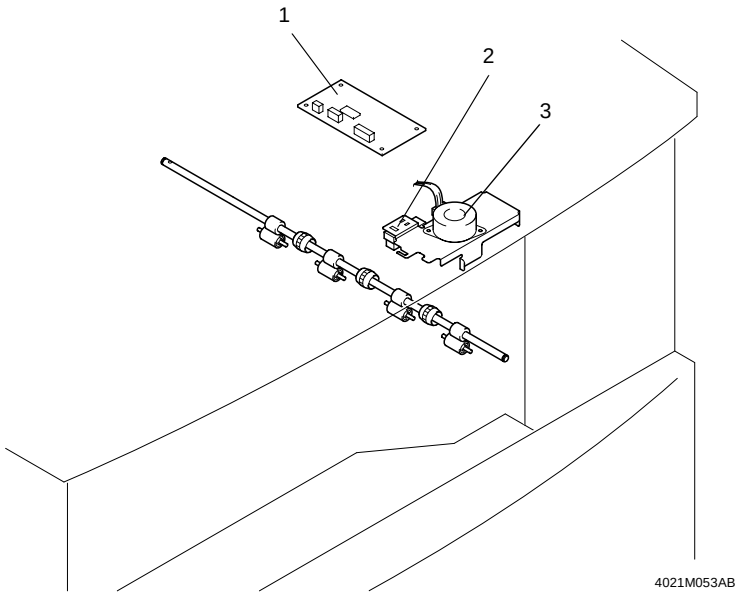

1. Main Board PWB-A
2. Home Sensor S31
3. Shift Motor M1

21-1. Exit Position Shifting Mechanism

- Paper is fed into the Shifting Unit along a straight path or shifted from the reference straight path position. This exit position shifting mechanism allows different finishing functions offered by the machine (Non-Sort, Sort, and Group) to be effected.

<Straight Feeding>

- The paper that travels along a straight path is fed straight into the Shifting Unit without being shifted sideways as the Exit Roller turns.

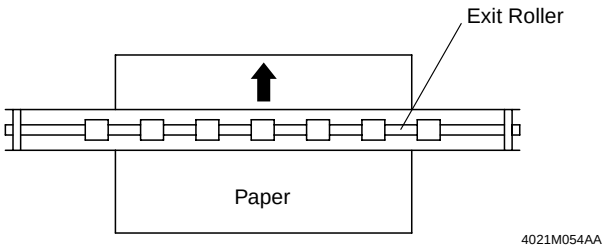

<Shifted Feeding>

- When the trailing edge of the paper transported to the exit section moves past the Fusing Roller, the Shift Motor is energized to move the Transport Roller sideways.
- The paper is fed into the Shifting Unit as it is shifted sideways.
- The Exit Roller is moved sideways by turning the motor forward or backward.
- The Exit Roller is detected at its home position by a sensor.

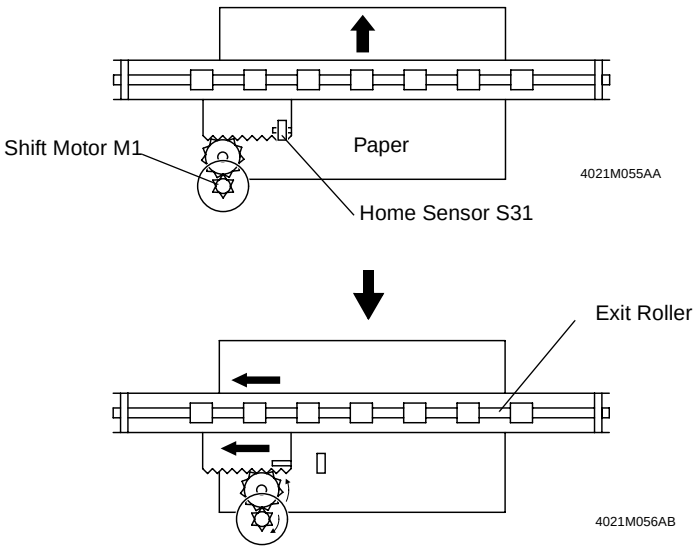

Elevtrical Component	Control Signal	Forward Rotation	Backward Rotation	OFF	Wiring Diagram
M1	PWB-A PJ2A-1 to 4	Pulse output			16-C

Elevtrical Component	Control Signal	Activated	Deactivated	Wiring Diagram
S31	PWB-A PJ3A-3	L	H	17-D

22. OTHER MECHANISM

22-1. Cooling Mechanism

(1) Power Supply Section Cooling Mechanism

- A cooling fan motor draws air from the area around the Power Supply Unit to the outside to prevent the Power Supply Unit temperature from running high.
- The cooling fan motor is turned at full speed when the Main Motor turns and at a speed reduction during other timings, thereby making the machine quieter without sacrificing cooling performance.

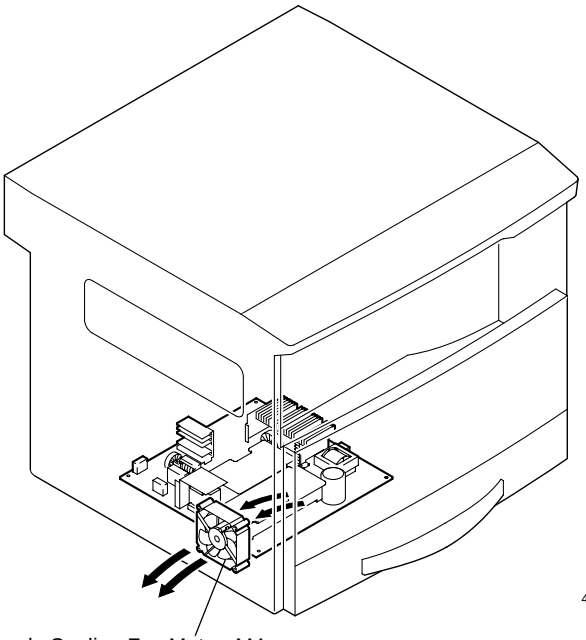

Power Supply Cooling Fan Motor M4

Elevtrical Component	Control Signal	ON	OFF	Wiring Diagram
M4	PWB-A PJ19A-1	analog voltage output	H	11-I

(2) Fusing Section Cooling Mechanism

- A fan motor draws air from the area around the Fusing Unit to the outside to prevent the machine interior temperature from running high. In addition, the fan motor pulls paper being transported up through suction force to help stabilize paper transport.
- Ozone produced from the PC Drum Charge Corona is absorbed by the Ozone Filter from the air drawn by a fan motor to the outside.
- The fan motor is turned at full speed during a print cycle and at a speed reduction during other timings, thereby making the machine quieter without sacrificing cooling performance.

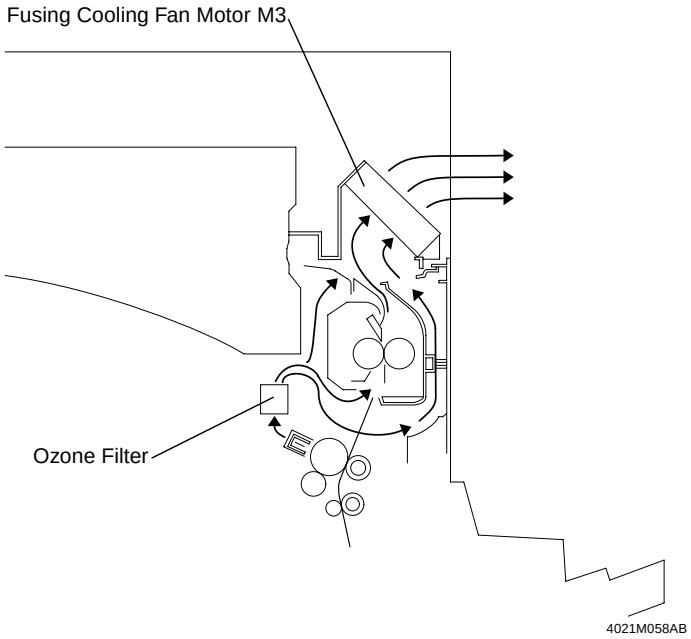

Elevtrical Component	Control Signal	ON	OFF	Wiring Diagram
M3	PWB-A PJ10A-4	analog voltage output	H	1-C



Copyright
2001 MINOLTA CO., LTD.
Printed in Japan

Use of this manual should be strictly supervised to avoid disclosure of confidential information.

MINOLTA Co.,Ltd.

4021-7990-11 01100500