Additional Information for SETUP INSTRUCTIONS

Upgrading the Firmware

Upgrading Procedure Using the RS-232C Interface

1. Turn off the machine.
2. Connect the Fax Board to the host computer using the RS-232C cable (D-sub 9 connector).
3. Turn on the machine.
4. Start up the host computer. (Windows 95, Windows 98, Windows Me, Windows NT 3.5x,Windows NT 4.0,Windows 2000, and Windows XP)
5. Set the CD-ROM that comes with your Printer Controller to your computer's CD-ROM drive.
6. Copy the update file to the C drive. (Copy to the highest directory of the C drive.)
7. Start up the "DOS prompt" or the "command prompt".
8. Type "cd..", and then press the Enter key.
9. Check that the following message appears.
   C:\>
10. Type "mode_com1:19,n,8,1", and then press the Enter key.
    C:\>mode com1:19,n,8,1
11. Check that the following message appears and that the com1 device setting procedure is completed. If this message appeared, continue with step 14.
    COM1: 19200,n,8,1
12. If an error message appeared, type "mode_com1:96,n,8,1", and then press the Enter key.
    C:\>mode com1:96,n,8,1
13. If the following message appeared, check that the com1 device setting procedure is completed.
    COM1: 9600,n,8,1
14. Type "copy_/b", and then type the name of the update file copied to drive C in step 6. *In the following example, the file name is assumed to be "VxxxTP1.bin".
    C:\>copy /b VxxxTP1.bin
15. Type "com1", and then press the Enter key.
    C:\>copy /b VxxxTP1.bin com1

The following message appears in the Message Panel, and the transmission of the firmware data is started. (Wait until all data has been sent.)

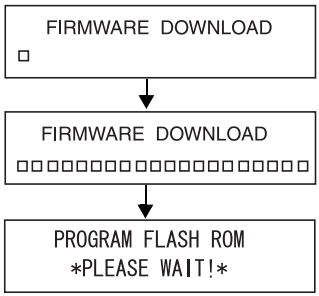

Transmission of data begins

Approx. 15 minutes
*If the data baud rate was set to 9600 bps in step 13, the data transmission time may take more than 15 minutes.

Transmission of data ends

16. Check that the following message appears in the Message Panel and that the firmware upgrade procedure is completed. If an error message appeared and the firmware upgrade was not completed, perform the procedure described in “Troubleshooting When Firmware Upgrading Fails”.

```
PROGRAM COMPLETE
POWER SUPPLY OFF/ON
```

17. Type “exit”, and then press the Enter key.

    C:\>exit

18. Make sure that the host computer exits from “DOS prompt” or “command prompt”.
19. Turn the machine off, then on.

Troubleshooting When Firmware Upgrading Fails

1. Shut down the host computer.
2. Turn off the machine.
3. Remove the transmission cable connecting the Fax Board to the host computer.
4. Change the setting for jumper switches JP5 to JP8 on the Fax Board from “2-3” to “1-2”.

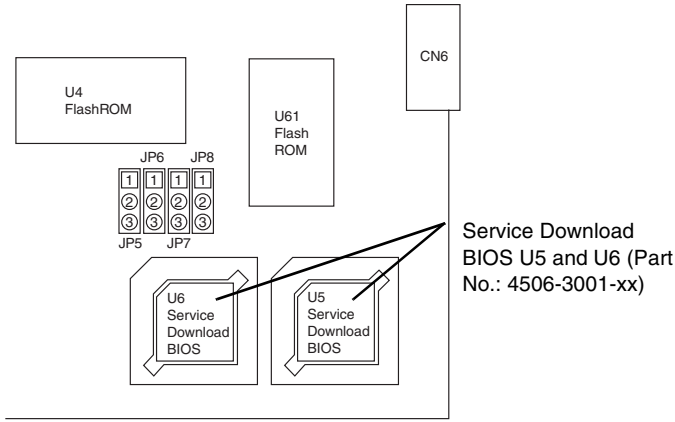

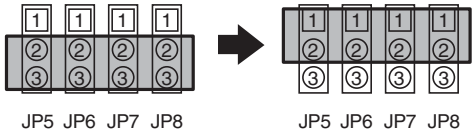

5. Mount Service Download BIOS U5 and U6 to memory sockets U5 and U6 on the Fax Board.
6. Connect the Fax Board to the host computer using the RS-232C cable (D-sub 9 connector).
7. Turn on the machine, and then check that the following message appears.

WAIT PROGRAM

8. Type “cd..”, and then press the Enter key.
9. Check that the following message appears.
   C:\>
10. Type “mode_com1:19,n,8,1”, and then press the Enter key.
    C:\>mode com1:19,n,8,1
11. Check that the following message appears and that the com1 device setting procedure is completed. If this message appeared, continue with step 14.
    COM1: 19200,n,8,1
12. If an error message appeared, type “mode_com1:96,n,8,1”, and then press the Enter key.
    C:\>mode com1:96,n,8,1
13. If the following message appeared, check that the com1 device setting procedure is completed.
    COM1: 9600,n,8,1
14. Type “copy_/b”, and then type the name of the update file.
    C:\>copy /b VxxxTP1.bin
15. Type “com1”, and then press the Enter key.
    C:\>copy /b VxxxTP1.bin com1

16. The following message appears in the Message Panel, and the transmission of the firmware data is started. (Wait until all data has been sent.)

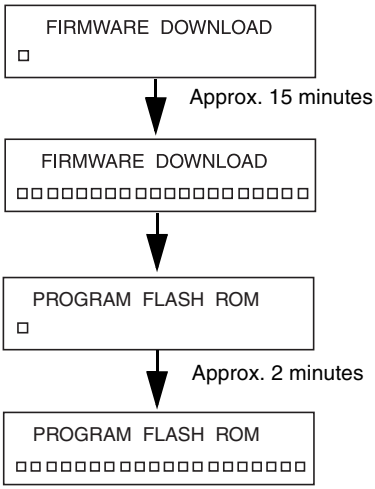

17. Check that the following message appears in the Message Panel and that the transmission of the firmware data is completed.



18. Type “exit”, and then press the Enter key.
    C:\>exit
19. Shut down the host computer.
20. Turn off the machine.
21. Remove the transmission cable connecting the Fax Board to the host computer.
22. Change the setting for jumper switches JP5 to JP8 on the Fax Board from “1-2” to “2-3”. (Return them to their default settings.)
23. Remove Service Download BIOS U5 and U6 from memory sockets U5 and U6 on the Fax Board.
24. Turn on the machine.