MINOLTA

Option Service Manual

The essentials of imaging

AF-10
PF-120
DT-201

INDEX (OPTION)

SAFETY PRECAUTIONS FOR INSPECTION AND SERVICE

AF-10

PF-120

DT-201

1. SAFETY PRECAUTIONS FOR INSPECTION AND SERVICE

- When performing inspection and service procedures, observe the following precautions to prevent accidents and ensure utmost safety.

✻ Depending on the model, some of the precautions given in the following do not apply.

- Different markings are used to denote specific meanings as detailed below.



WARNING Indicates a potentially hazardous situation which, if not avoided, could result in death or serious injury.



CAUTION Indicates a potentially hazardous situation which, if not avoided, may result in minor or moderate injury. It may also be used to alert against unsafe practices.

- The following graphic symbols are used to give instructions that need to be observed.



Used to call the service technician's attention to what is graphically represented inside the marking (including a warning).



Used to prohibit the service technician's from doing what is graphically represented inside the marking.



Used to instruct the service technician's to do what is graphically represented inside the marking.

1-1. Warning

WARNING

1. Always observe precautions.



- Parts requiring special attention in this product will include a label containing the mark shown on the left plus precautionary notes. Be sure to observe the precautions.
- Be sure to observe the "Safety Information" given in the Operator's Manual.

2. Before starting the procedures, be sure to unplug the power cord.



- This product contains a high-voltage unit and a circuit with a large current capacity that may cause an electric shock or burn.
- The product also contains parts that can jerk suddenly and cause injury.
- If this product uses a laser, laser beam leakage may cause eye damage or blindness.

3. Do not throw toner or the toner bottle into a fir.



- Do not throw toner or the toner bottle (Imaging Cartridge) into a fire. Toner expelled from the fire may cause burns.

4. Use the specified parts.



- For replacement parts, always use the genuine parts specified in the manufacturer's parts manual. Installing a wrong or unauthorized part could cause dielectric breakdown, overload, or undermine safety devices resulting in possible electric shock or fire.
- Replace a blown electrical fuse or thermal fuse with its corresponding genuine part specified in the manufacturer's parts manual. Installing a fuse of a different make or rating could lead to a possible fire. If a thermal fuse blows frequently, the temperature control system may have a problem and action must be taken to eliminate the cause of the problem.

5. Handle the power cord with care and never use a multiple outlet.



- Do not break, crush or otherwise damage the power cord. Placing a heavy object on the power cord, or pulling or bending it may damage it, resulting in a possible fire or electric shock.
- Do not use a multiple outlet to which any other appliance or machine is connected.
- Be sure the power outlet meets or exceeds the specified capacity.

6. Be careful with the high-voltage parts.



- A part marked with the symbol shown on the left carries a high voltage. Touching it could result in an electric shock or burn. Be sure to unplug the power cord before servicing this part or the parts near it.

7. Do not work with wet hands.



- Do not unplug or plug in the power cord, or perform any kind of service or inspection with wet hands. Doing so could result in an electric shock.

8. Do not touch a high-temperature part.



- A part marked with the symbol shown on the left and other parts such as the exposure lamp and fusing roller can be very hot while the machine is energized. Touching them may result in a burn.
- Wait until these parts have cooled down before replacing them or any surrounding parts.

9. Maintain a grounded connection at all times. (This item may not apply in the USA.)



- Be sure to connect the ground wire to the ground terminal even when performing an inspection or repair. Without proper grounding, electrical leakage could result in an electric shock or fire.
- Never connect the ground wire to a gas pipe, water pipe, telephone ground wire, or a lightning conductor.

10. Do not remodel the product.



- Modifying this product in a manner not authorized by the manufacturer may result in a fire or electric shock. If this product uses a laser, laser beam leakage may cause eye damage or blindness.

11. Restore all parts and harnesses to their original positions.

- To promote safety and prevent product damage, make sure the harnesses are returned to their original positions and properly secured in their clamps and saddles in order to avoid hot parts, high-voltage parts, sharp edges, or being crushed.
- To promote safety, make sure that all tubing and other insulating materials are returned to their original positions. Make sure that floating components mounted on the circuit boards are at their correct distance and position off the boards.

1-2. Caution

CAUTION

1. Precautions for Service Jobs.

- A toothed washer and spring washer, if used originally, must be reinstalled. Omitting them may result in contact failure which could cause an electric shock or fire.
- When reassembling parts, make sure that the correct screws (size, type) are used in the correct places. Using the wrong screw could lead to stripped threads, poorly secured parts, poor insulating or grounding, and result in a malfunction, electric shock or injury.
- Take great care to avoid personal injury from possible burrs and sharp edges on the parts, frames and chassis of the product.
- When moving the product or removing an option, use care not to injure your back or allow your hands to be caught in mechanisms.

2. Precautions for Servicing with Covers and Parts Removed.

- Wherever feasible, keep all parts and covers mounted when energizing the product.
- If energizing the product with a cover removed is absolutely unavoidable, do not touch any exposed live parts and use care not to allow your clothing to be caught in the moving parts. Never leave a product in this condition unattended.
- Never place disassembled parts or a container of liquid on the product. Parts falling into, or the liquid spilling inside, the mechanism could result in an electric shock or fire.
- Never use a flammable spray near the product. This could result in a fire.
- Make sure the power cord is unplugged before removing or installing circuit boards or plugging in or unplugging connectors.
- Always use the interlock switch actuating jig to actuate an interlock switch when a cover is opened or removed. The use of folded paper or some other object may damage the interlock switch mechanism, possibly resulting in an electric shock, injury or blindness.

3. Precautions for the Working Environment.



- The product must be placed on a flat, level surface that is stable and secure.
- Never place this product or its parts on an unsteady or tilting workbench when servicing.
- Provide good ventilation at regular intervals if a service job must be done in a confined space for a long period of time.
- Avoid dusty locations and places exposed to oil or steam.
- Avoid working positions that may block the ventilation ports of the product.

4. Precautions for Handling Batteries. (Lithium, Nickel-Cadmium, etc.)



- Replace a rundown battery with the same type as specified in the manufacturer's parts manual.
- Before installing a new battery, make sure of the correct polarity of the installation or the battery could burst.
- Dispose of used batteries according to the local regulations. Never dispose of them at the user's premises or attempt to try to discharge one.

5. Precautions for the Laser Beam. (Only for Products Employing a Laser)



- Removing the cover marked with the caution label could lead to possible exposure to the laser beam, resulting in eye damage or blindness. Be sure to unplug the power cord before removing this cover.
- If removing this cover while the power is ON is unavoidable, be sure to wear protective laser goggles that meet specifications.
- Make sure that no one enters the room when the machine is in this condition.
- When handling the laser unit, observe the "Precautions for Handling Laser Equipment."

6. Precautions for storage the toner or imaging cartridge.



- Be sure to keep the toner or imaging cartridge out of the reach of children. Licking the imaging cartridge or ingesting its contents is harmful to your health.

1-3. Other Precautions

- When handling circuit boards, observe the "HANDLING of PWBs".
- The PC Drum is a very delicate component. Observe the precautions given in "HANDLING OF THE PC DRUM" because mishandling may result in serious image problems.
- Note that replacement of a circuit board may call for readjustments or resetting of particular items, or software installation.

1-4. Used Batteries Precautions

ALL Areas

CAUTION

Danger of explosion if battery is incorrectly replaced.
Replace only with the same or equivalent type recommended by the manufacturer.
Dispose of used batteries according to the manufacturer's instructions.

Germany

VORSICHT!

Explosionsgefahr bei unsachgemäßem Austausch der Batterie.
Ersatz nur durch denselben oder einen vom Hersteller empfohlenen gleichwertigen Typ.
Entsorgung gebrauchter Batterien nach Angaben des Herstellers.

France

ATTENTION

Il y a danger d'explosion s'il y a remplacement incorrect de la batterie.
Remplacer uniquement avec une batterie du même type ou d'un type équivalent recommandé par le constructeur.
Mettre au rebut les batteries usagées conformément aux instructions du fabricant.

Denmark

ADVARSEL!

Lithiumbatteri - Eksplosionsfare ved fejlagtig håndtering.
Udskiftning må kun ske med batteri af samme fabrikat og type.
Levér det brugte batteri tilbage til leverandøren.

Finland, Sweden

VAROITUS

Paristo voi räjähtää, jos se on virheellisesti asennettu.
Vaihda paristo ainoastaan laitevalmistajan suosittelemaan tyyppiin.
Hävitä käytetty paristo valmistajan ohjeiden mukaisesti.

VARNING

Explosionsfara vid felaktigt batteribyte.
Använd samma batterityp eller en ekvivalent typ som rekommenderas av apparattillverkaren.
Kassera använt batteri enligt fabrikantens instruktion.

Norway

ADVARSEL

Eksplosjonsfare ved feilaktig skifte av batteri.
Benytt samme batteritype eller en tilsvarende type anbefalt av apparatfabrikanten.
Brukte batterier kasseres i henhold til fabrikantens instruksjoner.

1-5. Precautions for Service

- When performing inspection and service procedures, observe the following precautions to prevent mishandling of the machine and its parts.

✻ Depending on the model, some of the precautions given in the following do not apply.

1. Precautions Before Service

- When the user is using a word processor or personal computer from a wall outlet of the same line, take necessary steps to prevent the circuit breaker from opening due to overloads.
- Never disturb the LAN by breaking or making a network connection, altering termination, installing or removing networking hardware or software, or shutting down networked devices without the knowledge and express permission of the network administrator or the shop supervisor.

2. How to Use this Book

< DIS/REASSEMBLY, ADJUSTMENT >

- To reassemble the product, reverse the order of disassembly unless otherwise specified.

< TROUBLESHOOTING >

- If a component on a PWB or any other functional unit including a motor is defective, the text only instructs you to replace the whole PWB or functional unit and does not give troubleshooting procedures applicable within the defective unit.
- All troubleshooting procedures contained herein assume that there are no breaks in the harnesses and cords and all connectors are plugged into the right positions.
- The procedures preclude possible malfunctions due to noise and other external causes.

3. Precautions for Service

- Check the area surrounding the service site for any signs of damage, wear or need of repair.
- Keep all disassembled parts in good order and keep tools under control so that none will be lost or damaged.
- After completing a service job, perform a safety check. Make sure that all parts, wiring and screws are returned to their original positions.
- Do not pull out the toner hopper while the toner bottle is turning. This could result in a damaged motor or locking mechanism.
- If the product is to be run with the front door open, make sure that the toner hopper is in the locked position.
- Do not use an air gun or vacuum cleaner for cleaning the ATDC Sensor and other sensors, as they can cause electrostatic destruction. Use a blower brush and cloth. If a unit containing these sensors is to be cleaned, first remove the sensors from the unit.

4. Precautions for Dis/Reassembly

- Be sure to unplug the copier from the outlet before attempting to service the copier.
- The basic rule is not to operate the copier anytime during disassembly. If it is absolutely necessary to run the copier with its covers removed, use care not to allow your clothing to be caught in revolving parts such as the timing belt and gears.
- Before attempting to replace parts and unplug connectors, make sure that the power cord of the copier has been unplugged from the wall outlet.
- Be sure to use the Interlock Switch Actuating Jig whenever it is necessary to actuate the Interlock Switch with the covers left open or removed.
- While the product is energized, do not unplug or plug connectors into the circuit boards or harnesses.
- Never use flammable sprays near the copier.
- A used battery should be disposed of according to the local regulations and never be discarded casually or left unattended at the user's premises.
- When reassembling parts, make sure that the correct screws (size, type) and toothed washer are used in the correct places.

5. Precautions for Circuit Inspection

- Never create a closed circuit across connector pins except those specified in the text and on the printed circuit.
- When creating a closed circuit and measuring a voltage across connector pins specified in the text, be sure to use the GND wire.

6. Handling of PWBs

< During Transportation/Storage >

- During transportation or when in storage, new P.W. Boards must not be indiscriminately removed from their protective conductive bags.
- Do not store or place P.W. Boards in a location exposed to direct sunlight and high temperature.
- When it becomes absolutely necessary to remove a Board from its conductive bag or case, always place it on its conductive mat in an area as free as possible from static electricity.
- Do not touch the pins of the ICs with your bare hands.
- Protect the PWBs from any external force so that they are not bent or damaged.

< During Inspection/Replacement >

- Avoid checking the IC directly with a multimeter; use connectors on the Board.
- Never create a closed circuit across IC pins with a metal tool.
- Before unplugging connectors from the P.W. Boards, make sure that the power cord has been unplugged from the outlet.
- When removing a Board from its conductive bag or conductive case, do not touch the pins of the ICs or the printed pattern. Place it in position by holding only the edges of the Board.
- When touching the PWB, wear a wrist strap and connect its cord to a securely grounded place whenever possible. If you cannot wear a wrist strap, touch a metal part to discharge static electricity before touching the PWB.
- Note that replacement of a PWB may call for readjustments or resetting of particular items.

7. Handling of Other Parts

- The magnet roller generates a strong magnetic field. Do not bring it near a watch, floppy disk, magnetic card, or CRT tube.

8. Handling of the PC Drum

✻ Only for Products Not Employing an Imaging Cartridge.

< During Transportation/Storage >

- Use the specified carton whenever moving or storing the PC Drum.
- The storage temperature is in the range between –20°C and +40°C.
- In summer, avoid leaving the PC Drum in a car for a long time.

< Handling >

- Ensure that the correct PC Drum is used.
- Whenever the PC Drum has been removed from the copier, store it in its carton or protect it with a Drum Cloth.
- The PC Drum exhibits greatest light fatigue after being exposed to strong light over an extended period of time. Never, therefore, expose it to direct sunlight.
- Use care not to contaminate the surface of the PC Drum with oil-base solvent, fingerprints, and other foreign matter.
- Do not scratch the surface of the PC Drum.
- Do not apply chemicals to the surface of the PC Drum.
- Do not attempt to wipe clean the surface of the PC Drum.

If, however, the surface is contaminated with fingerprints, clean it using the following procedure.

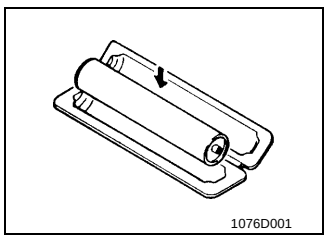

A. Place the PC Drum into one half of its carton.

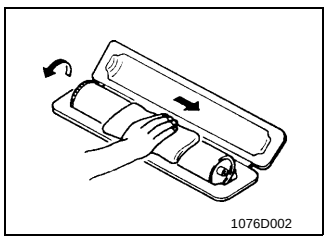

B. Gently wipe the residual toner off the surface of the PC Drum with a dry, Dust-Free Cotton Pad.

- Turn the PC Drum so that the area of its surface on which the line of toner left by the Cleaning Blade is present is facing straight up. Wipe the surface in one continuous movement from the rear edge of the PC Drum to the front edge and off the surface of the PC Drum.
- Turn the PC Drum slightly and wipe the newly exposed surface area with a CLEAN face of the Dust-Free Cotton Pad. Repeat this procedure until the entire surface of the PC Drum has been thoroughly cleaned.

✻ At this time, always use a CLEAN face of the dry Dust-Free Cotton Pad until no toner is evident on the face of the Pad after wiping.

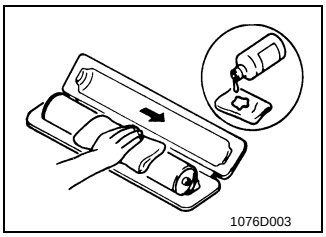

C. Soak a small amount of either ethyl alcohol or isopropyl alcohol into a clean, unused Dust-Free Cotton Pad which has been folded over into quarters. Now, wipe the surface of the PC Drum in one continuous movement from its rear edge to its front edge and off its surface one to two times.

✻ Never move the Pad back and forth.

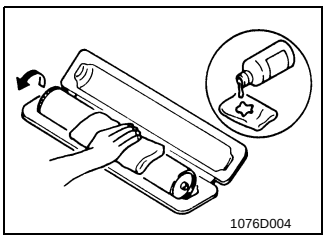

D. Using the SAME face of the Pad, repeat the procedure explained in the latter half of step 3 until the entire surface of the PC Drum has been wiped. Always OVERLAP the areas when wiping. Two complete turns of the PC Drum would be appropriate for cleaning.

NOTES

- *Even when the PC Drum is only locally dirtied, wipe the entire surface.*
- *Do not expose the PC Drum to direct sunlight. Clean it as quickly as possible even under interior illumination.*
- *If dirt remains after cleaning, repeat the entire procedure from the beginning one more time.*

9. Handling of the Imaging Cartridge

✻ Only for Products Employing an Imaging Cartridge.

< During Transportation/Storage >

- The storage temperature is in the range between –20°C and +40°C.
- In summer, avoid leaving the Imaging Cartridge in a car for a long time.

< Handling >

- Store the Imaging Cartridge in a place that is not exposed to direct sunlight.

< Precautionary Information on the PC Drum Inside the Imaging Cartridge >

- Use care not to contaminate the surface of the PC Drum with oil-base solvent, fingerprints, and other foreign matter.
- Do not scratch the surface of the PC Drum.
- Do not attempt to wipe clean the surface of the PC Drum.

FrameMaker Ver5.5E(PC) AF-10 OPTION FOR Di152/Di183
01.08.28

AF-10

SERVICE MANUAL

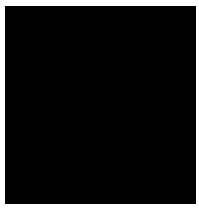

10794

CONTENTS

GENERAL, MECHANICAL/ELECTRICAL

1. SPECIFICATIONS M-1
2. EXTERIOR VIEW M-2
3. CROSS-SECTIONAL VIEW M-3
4. DRIVE SYSTEM M-4
5. ELECTRICAL COMPONENT LAYOUT M-5
6. MODES M-6
   - 6-1. Standard Mode M-6
   - 6-2. Mixed Original Detection Mode M-6
7. TAKE-UP SECTION M-7
   - 7-1. Document Take-Up and Feed Mechanism M-7
   - 7-2. Document Separating Mechanism M-8
8. TRANSPORT/EXIT MECHANISM M-9
   - 8-1. Document Transport Mechanism M-9
   - 8-2. Document Exit Mechanism M-10
9. OTHER FEATURES M-11
   - 9-1. Document Size Detection Mechanism M-11
   - 9-2. Raised/Lowered Position Detection Mechanism M-11

DIS/REASSEMBLY, ADJUSTMENT

1. MAINTENANCE SCHEDULE D-1
2. DISASSEMBLY D-2
   - 2-1. Removal of the Exterior Covers D-2
   - 2-2. Removal of the Pick-Up Roller/Take-Up Roller D-3
   - 2-3. Removal of the Separator Roller D-4
   - 2-4. Cleaning of the Registration Roller/Rolls D-4
   - 2-5. Cleaning of the Exit Roller/Rolls D-5
3. ADJUSTMENT D-6
   - 3-1. Adjust Mode Setting Procedure D-6
   - 3-2. Height Adjustment D-6
   - 3-3. Leading Edge Skew Adjustment D-7
   - 3-4. Zoom Adjustment and Registration Adjustment D-8
     - (1) FD Zoom Ratio Adjustment D-8
     - (2) CD Registration Adjustment D-9
     - (3) FD Registration Adjustment D-10

TECH. REP. MODE

1. TECH. REP. MODE S-1
   - 1-1. Tech. Rep. Mode Setting Procedure S-1
   - 1-2. ADF Document Passage Test S-1
   - 1-3. ADF Original Glass Check S-1

TROUBLESHOOTING

1. MISFEED DETECTION TIMING AND MISFEED TROUBLESHOOTING PROCEDURES T-1
   - 1-1. Misfeed Detection Timing T-1
   - 1-2. Misfeed Troubleshooting Procedures T-2

GENERAL, MECHANICAL/ELECTRICAL

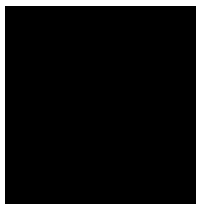

1. SPECIFICATIONS

Name	: Automatic Document Feeder
Installation	: Inserted in top portion in the rear of copier
Type of Document	: Plain paper (Standard: 50 to 110g/m^2 or 13-1/4 to 29-1/4 lbs., Mixed Original: 60 to 90 g/m^2 or 16 to 24 lbs.)
Detectable Document Size	: Metric Areas: A5L, B5L/C, A4L/C, B4L, A3L, LetterL/C, FLS Inch Areas: 5-1/2 × 8-1/2L, 8-1/2 × 11L/C, 8-1/2 × 14L, 11 × 15, 11 × 17
Capacity	: 50 sheets max. (80 g/m^2)
Document Alignment	: Center
Document Loading	: Face up
Document Exchange Speed	: 15 sheets/min. (A4C) 18 sheets/min. (A4C)
Modes	: Standard Mixed Original (only for originals with the same width)
Power Requirements	: DC24 V, DC5 V (supplied from the copier)
Max. Power Consumption	: 36 W or less
Dimensions	: Width: 602 mm or 23-3/4 Depth: 502 mm or 19-3/4 Height: 101 mm or 4
Weight	: 5.5 kg or 12-1/4 lbs.
Operating Environment	: Same as copier
Type of Originals Not Guaranteed for Reliable Feeding	

Type of Original	Possible Trouble
Sheets stapled or clipped together	Take-up failure, damaged sheet, defective drive mechanism due to jammed staples or clips.
Sheets glued together	Take-up failure, damaged sheet
Sheets folded, torn, or wrinkled	Take-up failure, damaged sheet
Sheets severely curled	Sheets misfeed due to being dog-eared or fed in askew

2. EXTERIOR VIEW

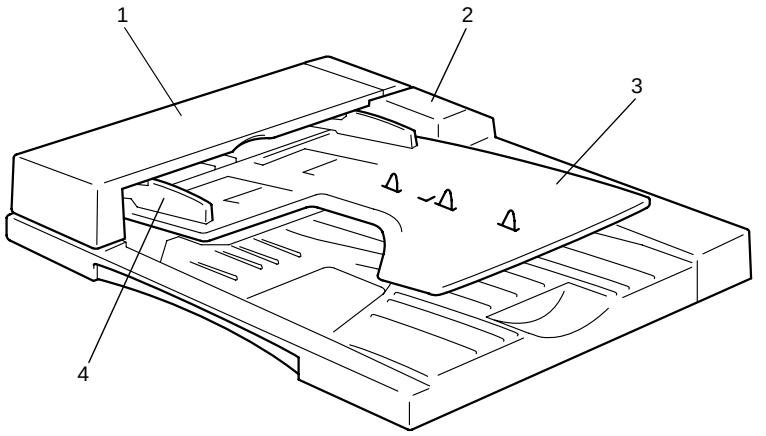

4688M507CA

1. Take-Up Cover
2. Rear Cover
3. Document Loading Tray
4. Document Edge Guide

3. CROSS-SECTIONAL VIEW

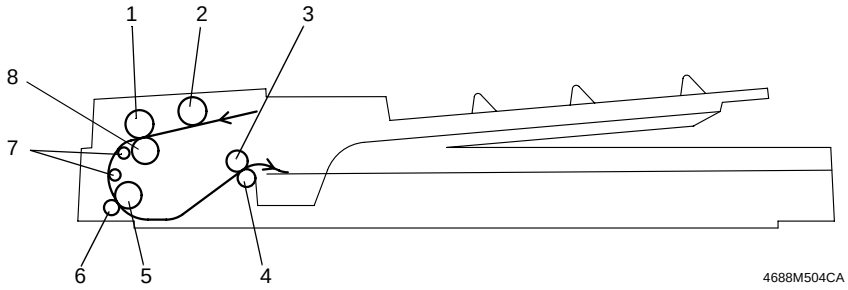

1. Take-Up Roller
2. Pick-Up Roller
3. Exit Rollers
4. Exit Rolls
5. Registration Rollers
6. Registration Rolls
7. Transport Rolls
8. Separator Roller

4. DRIVE SYSTEM

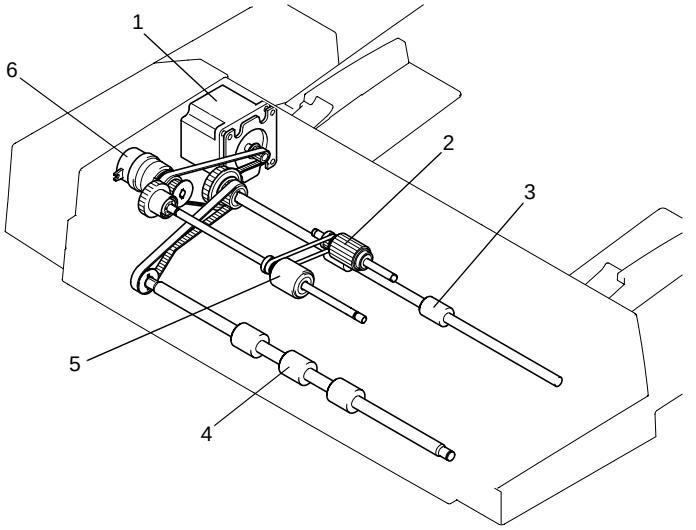

1. Main Motor
2. Pick-Up Roller
3. Exit Rollers
4. Registration Rollers
5. Take-Up Roller
6. Take-Up Clutch

5. ELECTRICAL COMPONENT LAYOUT

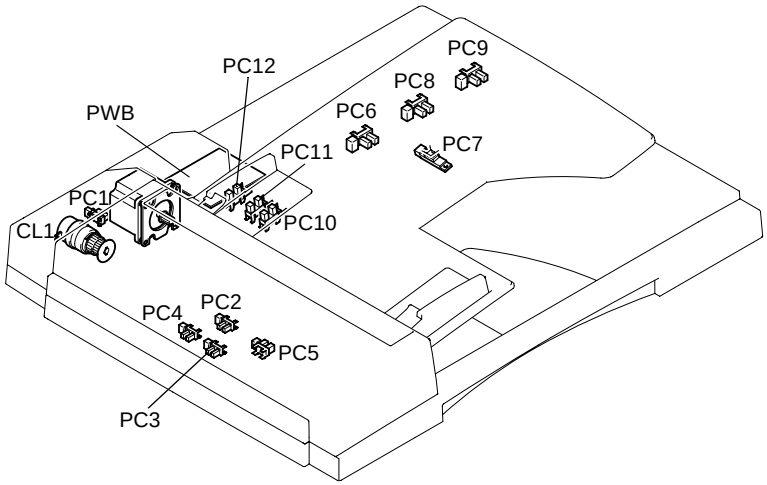

Symbol	Name	Symbol	Name
PWB	Interface Board	PC5	Paper Exit Sensor
M1	Main Motor	PC6	Length Size Detection Sensor 1
CL1	Paper Take-Up Clutch	PC7	Length Size Detection Sensor 2
PC1	Take-Up Cover Open/Close	PC8	Length Size Detection Sensor 3
	Detecting Sensor	PC9	Length Size Detection Sensor 4
PC2	Paper Empty Sensor	PC10	Width Size Detection Sensor 1
PC3	Registration Sensor	PC11	Width Size Detection Sensor 2
PC4	Separator Sensor	PC12	Width Size Detection Sensor 3

✻ PC9: Inch area only
✻ PC10: Metric area only

6. MODES

6-1. Standard Mode

- When a multi-page document is being copied, the copier detects the size of only the first page of the document and copies the subsequent pages based on that size detection.
- This saves the copier the time required for detecting the sizes of the subsequent pages of the document, making for faster paper feed timing.

6-2. Mixed Original Detection Mode

- The copier detects the size of each page of the document and, according to the size detected, feeds the paper of the corresponding size selected from among the available paper sources for making copies.
- This mode is used when making copies from a document set consisting of pages of varying length, but of the same width.

7. TAKE-UP SECTION

7-1. Document Take-Up and Feed Mechanism

- The document is taken up as the Pick-Up Roller and Take-Up Roller turn.
- The Pick-Up Roller transports the document up to the Take-Up Roller.
- After a scan is completed, the Main Motor is turned backward to raise the Pick-Up Roller.
- The Pick-Up Roller and the Take-Up Roller are turned through the Paper Take-Up Clutch and by a gear train and a belt driven by the Main Motor.
- The Paper Empty Sensor is used to detect a document loaded on the Document Loading Tray.
- The Document Stoppers determine the leading edge position of the document loaded on the Document Loading Tray. They are in the lowered, swung-down position in the standby state and swing upward when the document is to be taken up.
- The swing-up and swing-down motion of the Document Stoppers is operatively connected to the raising and lowering of the Pick-Up Roller.

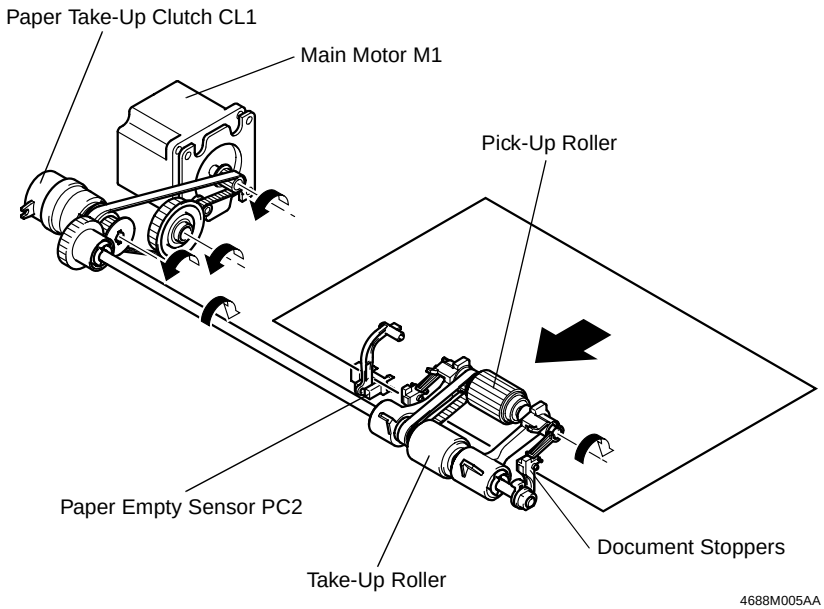

7-2. Document Separating Mechanism

- The coefficient of friction between the Take-Up Roller and Separator Roller is effectively used to prevent double feed of paper.

When one sheet of paper is taken up	:	The coefficient of friction on the front side of the sheet of paper taken up and fed through the space between the Take-Up Roller and Separator Roller is the same as that on the backside of the sheet of paper, allowing the paper to be properly fed into the copier.
When two or more sheets of paper are taken up	:	The coefficient of friction between the paper and the Separator Roller is greater than that between the sheets of paper, which allows only the top sheet of paper to be fed into the copier.

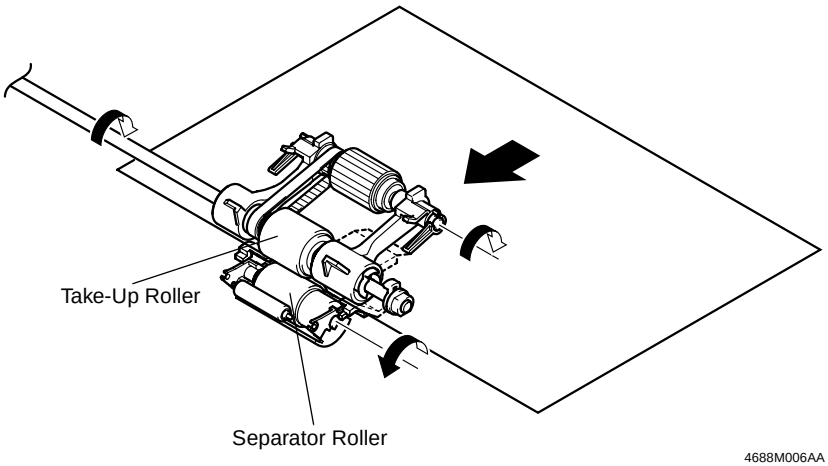

4688M006AA

8. TRANSPORT/EXIT MECHANISM

8-1. Document Transport Mechanism

- The document taken up is transported to the document scanning position of the copier by the Registration Rollers.
- The Registration Rollers are turned by a gear train and belts which are driven by the Main Motor.

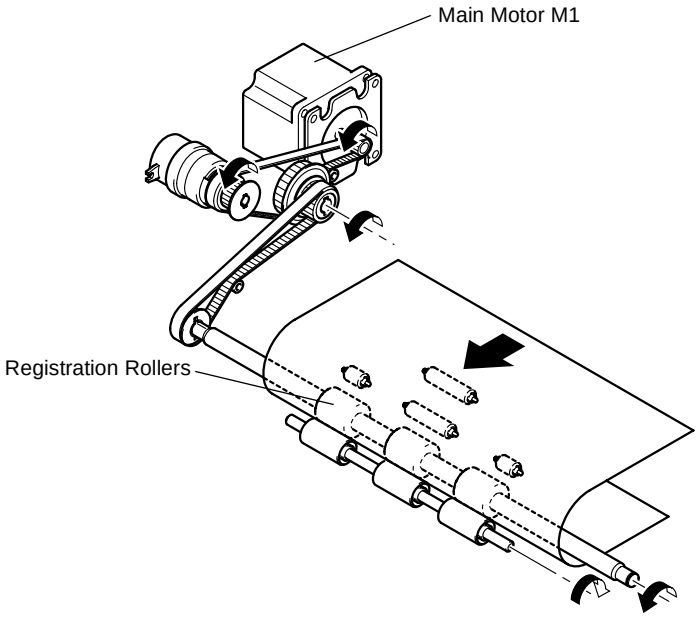

4688M007AA

8-2. Document Exit Mechanism

- The document is fed out of the ADF by the Exit Roller.
- The Exit Roller is driven by gears and a belt which are driven by the Main Motor.

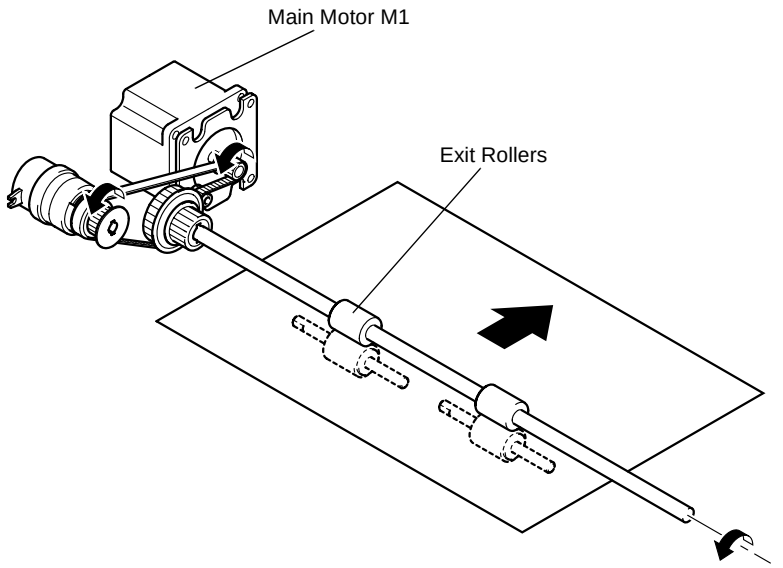

9. OTHER FEATURES

9-1. Document Size Detection Mechanism

- The document size is determined by means of two different systems of document width detection and document length detection.

✻ Document Width Detection
- The width of an original is detected by the combination of Paper Width Sensors as detected while the original is being taken up.
- Each sensor is located as follows with reference to the Document Edge Guide in the rear.

✻ Document Length Detection
- The length of the original is detected by the Paper Length Sensor when the document is loaded in the unit.
- The Paper Length Sensor is located at the Document Loading Tray.

9-2. Raised/Lowered Position Detection Mechanism

- There is a magnet installed in the ADF body to allow the copier to know that the ADF is raised or lowered.
- This magnet actuates the Size Reset Switch on the copier.

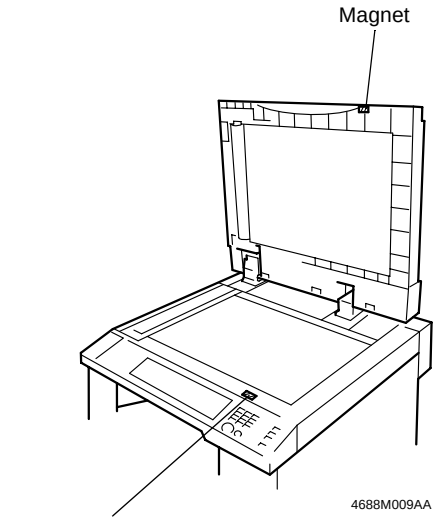

DIS/REASSEMBLY, ADJUSTMENT

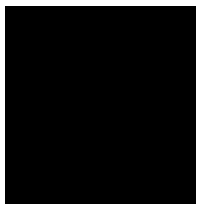

1. MAINTENANCE SCHEDULE

PM Parts	Maintenance Schedule Cycle		Tools Used for Cleaning	Parts No.	QTY	PM Counter	Reference Page
	Clean	Replace					
Pick-Up Roller	30 k	120 k	Cloth, Alcohol	4688-3032-XX	1	ADF	☞ D-3
Take-Up Roller	30 k	120 k		4688-3033-XX	1		☞ D-3
Separator Roller	30 k	120 k		4688-3034-XX	1		☞ D-4
Registration Rollers	30 k	—		—	3		☞ D-4
Registration Rolls	30 k	—		—	3		☞ D-4
Exit Rollers	30 k	—		—	2		☞ D-5
Exit Rolls	30 k	—		—	2		☞ D-5
Transport Rollers	30 k	—		—	4		—
Length Size Detection Sensor 2	30 k	—	Blower brush	—	1		—

NOTES

- *k=1,000 sheets*
- *The Pick-Up Roller, Take-Up Roller, and the Separator Roller must be replaced at the same time.*
- *The above information is subject to change without notice.*
- *For part numbers, see the Parts Manual and Parts Modification Notice.*
- *Perform the service job based on the values of the PM Counter of the copier. (For how to show the PM Counter on the Display, see "SWITCHES ON PWBs, TECH. REP. SETTINGS" of the Service Manual for the copier.)*

2. DISASSEMBLY

2-1. Removal of the Exterior Covers

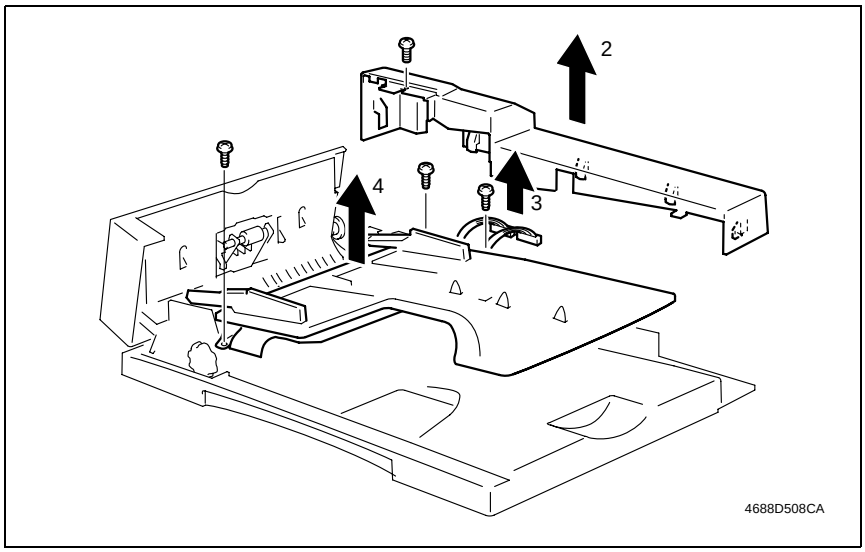

1. Open the Document Take-Up Section Cover.
2. Remove one screw, unlock five tabs, and then remove the Rear Cover.
3. Unplug two connectors (CN3, CN5).
4. Remove three screws and the Document Feeding Tray.

2-2. Removal of the Pick-Up Roller/Take-Up Roller

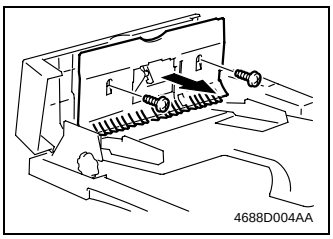

1. Open the Document Take-Up Section Cover.
2. Remove two screws and the Document Take-Up Section Inner Cover.

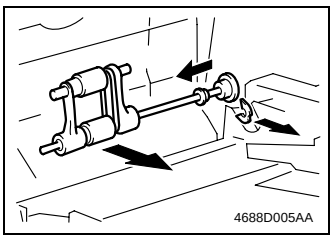

3. Snap off one C-clip.
4. Slide the bushing and remove the Pick-Up Roller/ Take-Up Roller Assy.

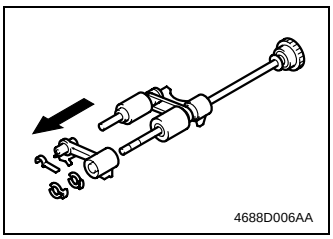

5. Snap off two C-clips and remove one lever and holder.

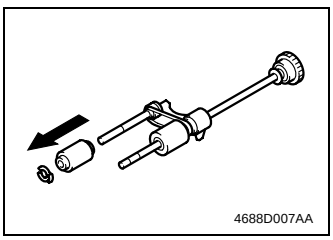

6. Snap off one C-clip and remove the Pick-Up Roller.

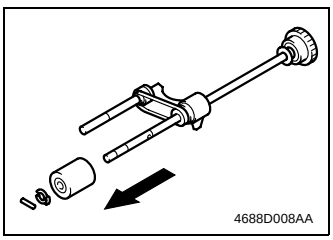

7. Remove one shaft, snap off one C-clip, and remove the Take-Up Roller.

2-3. Removal of the Separator Roller

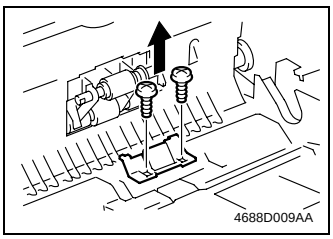

1. Remove two screws and the Separator Section Cover.

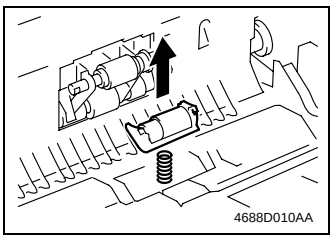

2. Unhook one spring and remove the Separator Roller Assy.

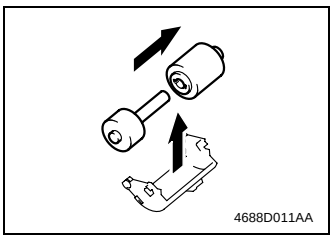

3. Remove the Separator Roller.

2-4. Cleaning of the Registration Roller/Rolls

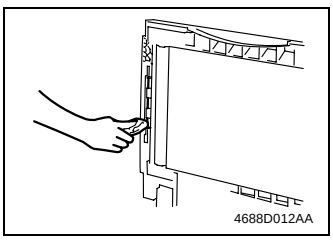

1. Wipe the surface of the Registration Rolls clean with a soft cloth dampened with alcohol.

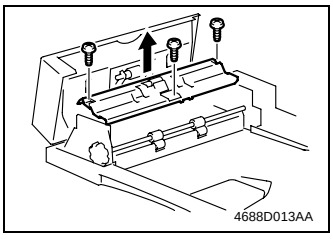

2. Remove the Rear Cover.
3. Remove the Document Loading Tray.
4. Remove three screws and the Separator Section Assy.

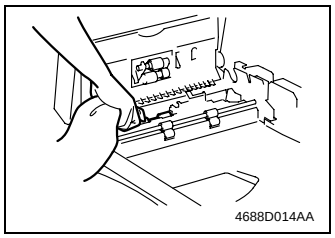

5. Wipe the surface of the Registration Rollers clean with a soft cloth dampened with alcohol.

2-5. Cleaning of the Exit Roller/Rolls

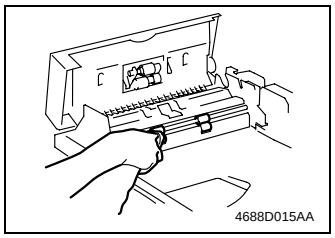

1. Remove the Rear Cover.
2. Remove the Document Loading Tray.
3. Wipe the surface of the Exit Roller/Rolls clean with a soft cloth dampened with alcohol.

3. ADJUSTMENT

3-1. Adjust Mode Setting Procedure

1. Press the Meter Count key.
2. Press the following keys in this order: Stop → 0 → 0 → Stop → 0 → 1.
3. Press the Stop key and then the Start key.

3-2. Height Adjustment

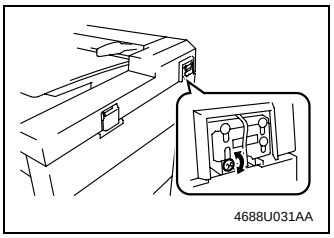

1. Turn the screw shown on the left and adjust the height of the Automatic Document Feeder.

✻ Turn the screw clockwise to raise the ADF.
✻ Turn the screw counterclockwise to lower the ADF.

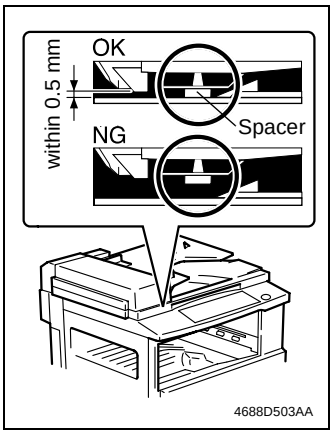

2. Adjust so that the spacer contacts the glass at the Original Scale as illustrated.

3-3. Leading Edge Skew Adjustment

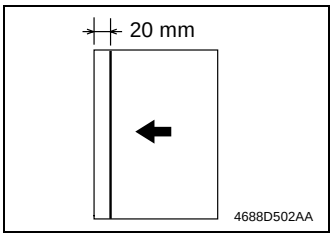

1. Ready a test chart (A4C or LetterC) as illustrated on the left.
2. Load the test chart in the ADF and make a copy five times repeatedly.

NOTE
- *Load the test chart crosswise in the ADF.*

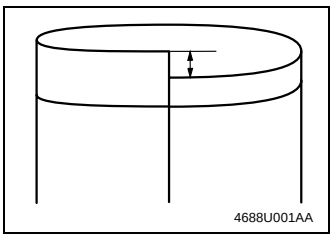

3. Align the edges of the copy as illustrated and determine if the deviation meets the specifications.

Specifications	0 ± 3.0 mm

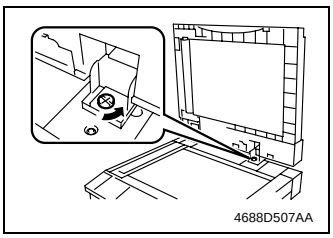

✻ Perform the following adjustment steps if the deviation falls outside the specified range.

4. Loosen one screw.

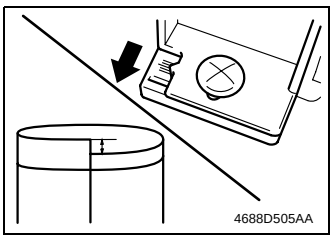

5. If the line is deviated as illustrated on the left, slide the pointer on graduations toward the front.

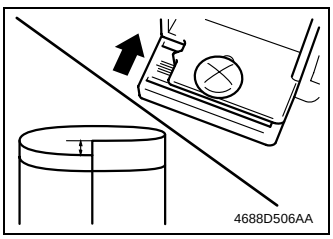

6. If the line is deviated as illustrated on the left, slide the pointer on graduations toward the rear.
7. Tighten the screw.
8. Make a copy of the test chart again to check for deviation.

3-4. Zoom Adjustment and Registration Adjustment

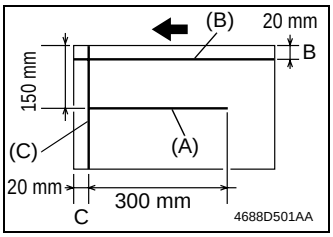

Ready a test chart (A3L or 11 × 17) as illustrated on the left.

✻ (A): Draw a 300-mm-long horizontal reference line starting with a point 20 mm from the left edge and 150 mm from the top edge.

✻ (B): Draw a horizontal reference line at a point 20 mm from the top edge.

✻ (C): Draw a vertical reference line at a point 20 mm from the left edge.

(1) FD Zoom Ratio Adjustment

✻ Amount of error with respect to the reference line: ± 1.5 %

Specification	Mode	Code No.	Setting Range
(A): 300 ± 4.5 mm	Adjust Mode	7	87 to 113 (1 step: 0.4 %)

Adjustment Procedure:

1. Make a full-size copy of the test chart.
2. Using a scale, measure dimension (A) on the copy and determine if the amount of error falls within the specified range.

✻ Perform the following adjustment steps if dimension (A) falls outside the specified range.

3. Set the copier into the Adjust mode.
4. With “AJ-” shown on the Display, enter the code number “7” from the 10-Key Pad. Then, press the Start key to enter the ADF FD Zoom Ratio Adjustment mode.
5. Press the Clear key to reset the current setting value.
6. Enter the new setting value from the 10-Key Pad and press the Start key.
7. Make a copy of the test chart again and check dimension (A) for error.

Setting Procedure

- *If dimension (A) on the copy is longer than the specified range, decrease the setting value.*
- *If dimension (A) on the copy is shorter than the specified range, increase the setting value.*
- *Repeat steps 3 through 7 if one adjustment sequence does not bring the dimension into the specified range.*

(2) CD Registration Adjustment

NOTE
- *This adjustment must be made after the "FD Zoom Ratio Adjustment" has been made.*

Specification	Mode	Code No.	Setting Range
B: 20 ± 2.0 mm	Adjust Mode	8	0 to 200 (1 step: 0.1 mm)

Adjustment Procedure:
1. Make a copy of the test chart.
2. Using a scale, measure dimension B on the copy and determine if the amount of error falls within the specified range.

✻ Perform the following adjustment steps if dimension B falls outside the specified range.
3. Set the copier into the Adjust mode.
4. With "AJ-" shown on the Display, enter the code number "8" from the 10-Key Pad. Then, press the Start key to enter the ADF CD Registration Adjustment mode.
5. Press the Clear key to reset the current setting value.
6. Enter the new setting value from the 10-Key Pad and press the Start key.
7. Make a copy of the test chart again and check dimension B for error.

Setting Procedure
- *If dimension B on the copy is longer than the specified range, increase the setting value.*
- *If dimension B on the copy is shorter than the specified range, decrease the setting value.*
- *Repeat steps 3 through 7 if one adjustment sequence does not bring the dimension into the specified range.*

(3) FD Registration Adjustment

NOTE
- *This adjustment must be made after the "FD Zoom Ratio Adjustment" has been made.*

Specification	Mode	Code No.	Setting Range
C: 20 ± 2.5 mm	Adjust Mode	9	50 to 150 (1 step: 0.1 mm)

Adjustment Procedure:
1. Make a copy of the test chart.
2. Using a scale, measure dimension C on the copy and determine if the amount of error falls within the specified range.

✻ Perform the following adjustment steps if dimension C falls outside the specified range.
3. Set the copier into the Adjust mode.
4. With "AJ-" shown on the Display, enter the code number "9" from the 10-Key Pad. Then, press the Start key to enter the ADF FD Registration Adjustment mode.
5. Press the Clear key to reset the current setting value.
6. Enter the new setting value from the 10-Key Pad and press the Start key.
7. Make a copy of the test chart again and check dimension C for error.

Setting Procedure
- *If dimension C on the copy is longer than the specified range, increase the setting value.*
- *If dimension C on the copy is shorter than the specified range, decrease the setting value.*
- *Repeat steps 3 through 7 if one adjustment sequence does not bring the dimension into the specified range.*

TECH. REP. MODE

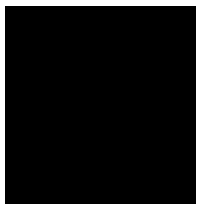

1. TECH. REP. MODE

1-1. Tech. Rep. Mode Setting Procedure

1. Press the Meter Count key.
2. Press the following keys in this order: Stop → 0 → 0 → Stop → 0 → 1.

1-2. ADF Document Passage Test

- This test is run to check for correct paper passage through the ADF.

Procedure:
1. Enter the Tech. Rep. mode.
2. Enter the code number “12” from the 10-Key Pad and press the Start key.
3. Load a document in the ADF.
4. With “doc” shown on the Display, press the Start key to start the sequence.

NOTES
- *Pressing the Start key starts the sequence and pressing the Stop key stops it.*
- *The sequence is not started if a document is not loaded in the ADF.*

1-3. ADF Original Glass Check

- The area through which the original is fed is scanned and printed to check for possible dirt and scratches on the glass.

Procedure:
1. Enter the Tech. Rep. mode.
2. Enter the code number “13” from the 10-Key Pad and press the Start key.
3. With “Adf” shown on the Display, press the Start key to start the sequence.
4. Two copies are fed out. Check the first copy for traces of contamination and scratches.

NOTE
- *Load the tray with A3L or 11 × 17 paper for this check.*

TROUBLESHOOTING

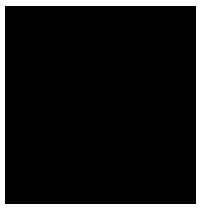

1. MISFEED DETECTION TIMING AND MISFEED TROUBLESHOOTING PROCEDURES

1-1. Misfeed Detection Timing

- When a paper misfeed is detected, the copier panel gives a display as shown below.
- The symbol “L” given in ( ) indicates that the leading edge of the paper is detected by the sensor.

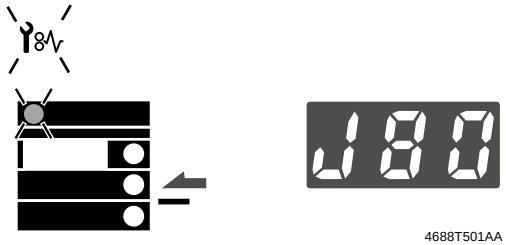

4688T501AA

Type	Code	Detection Start	Detection
Paper left	—	Power Switch ON Misfeed reset	Separator Sensor (L)
			Registration Sensor (L)
			Paper Exit Sensor (L)
ADF take-up failure	J80	Power Switch ON	Separator Sensor (L)
ADF transport failure	J81	Power Switch ON	Registration Sensor (L)
ADF exit failure	J83	Power Switch ON	Paper Exit Sensor (L)

1-2. Misfeed Troubleshooting Procedures

- The document is not properly detected when it is loaded.
- The document is not taken up at all.

Step	Check Item	Result	Action
1	Document being used falls outside the category of reliable feeding.	NO	Instruct the user.
2	A document set not exceeding the capacity of the Document Feeding Tray is loaded.	NO	Instruct the user.
3	Pick-Up Roller properly presses the original down.	NO	Correct the drive coupling (to ensure proper meshing of drive transmitting gears).
4	Paper Empty Sensor check: The voltage across CN2-3 on the Interface Board (PWB) and GND is DC5 V when there is no paper and DC0 V when there is paper.	YES	Change the Interface Board.
		NO	Correct the actuator. Change the sensor.
5	Main Motor drive is properly transmitted.	YES	Correct the drive coupling (to ensure proper meshing of drive transmitting gears).
		NO	Change the Main Motor. Change the Interface Board.

- Multiple feed of document pages occurs.

Step	Check Item	Result	Action
1	Document being used falls outside the category of reliable feeding.	NO	Instruct the user.
2	A document set not exceeding the capacity of the Document Feeding Tray is loaded.	NO	Instruct the user.
3	Take-Up Roller, Pick-Up Roller, and/or Exit Roller are deformed, worn, or dirty with paper dust.	YES	Clean or change the defective roller.
4	Pressure between the Separator Roller and Take-Up Roller is good.	NO	Check the spring for correct installation.
		YES	Change the roller.

• The document stops midway.

Step	Check Item	Result	Action
1	Foreign object is present on the paper path.	YES	Remove the foreign object.
2	Take-Up Section Cover is closed in position.	NO	Close the cover.
3	Registration Roller and/or Exit Roller are deformed, worn, or dirty with paper dust.	YES	Clean or change the defective roller.
4	Registration Roller and Exit Roller turn.	NO	Correct the drive coupling (to ensure proper meshing of drive coupling gears and belts).
5	Registration Sensor check: The voltage across CN2-6 on the Interface Board (PWB) and GND is DC0 V when there is no paper and DC5 V when there is paper.	YES	Change the Interface Board.
		NO	Correct the actuator. Change the sensor.

• The document is fed in askew.

Step	Check Item	Result	Action
1	Foreign object is present on the paper path.	YES	Remove the foreign object.
2	Take-Up Section Cover is closed in position.	NO	Close the cover.
3	Document consists of pages of different sizes.	YES	Reload the document.
4	Any of the rollers is deformed, worn, or dirty with paper dust.	YES	Clean or change the roller.

• The document wrinkles or breaks.

Step	Check Item	Result	Action
1	Document being used falls outside the category of reliable feeding.	NO	Instruct the user.
2	A document set not exceeding the capacity of the Document Feeding Tray is loaded.	NO	Instruct the user.
3	Foreign object is present on the paper path.	YES	Remove the foreign object.
4	Any of the rollers is deformed, worn, or dirty with paper dust.	YES	Clean or change the roller.

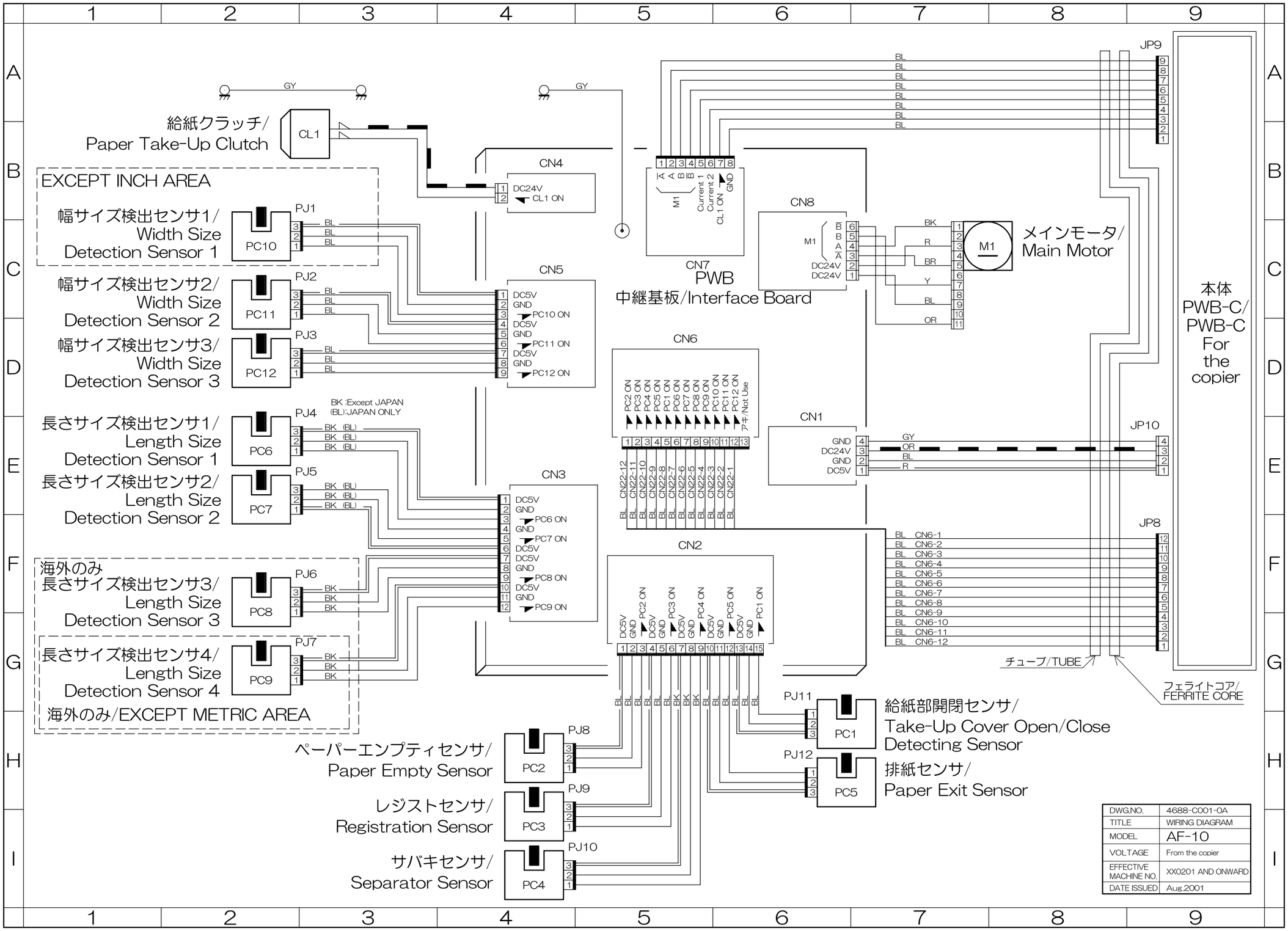

DWG.NO.	4688-C001-0A
TITLE	WIRING DIAGRAM
MODEL	AF-10
VOLTAGE	From the copier
EFFECTIVE MACHINE NO.	XX0201 AND ONWARD
DATE ISSUED	Aug.2001

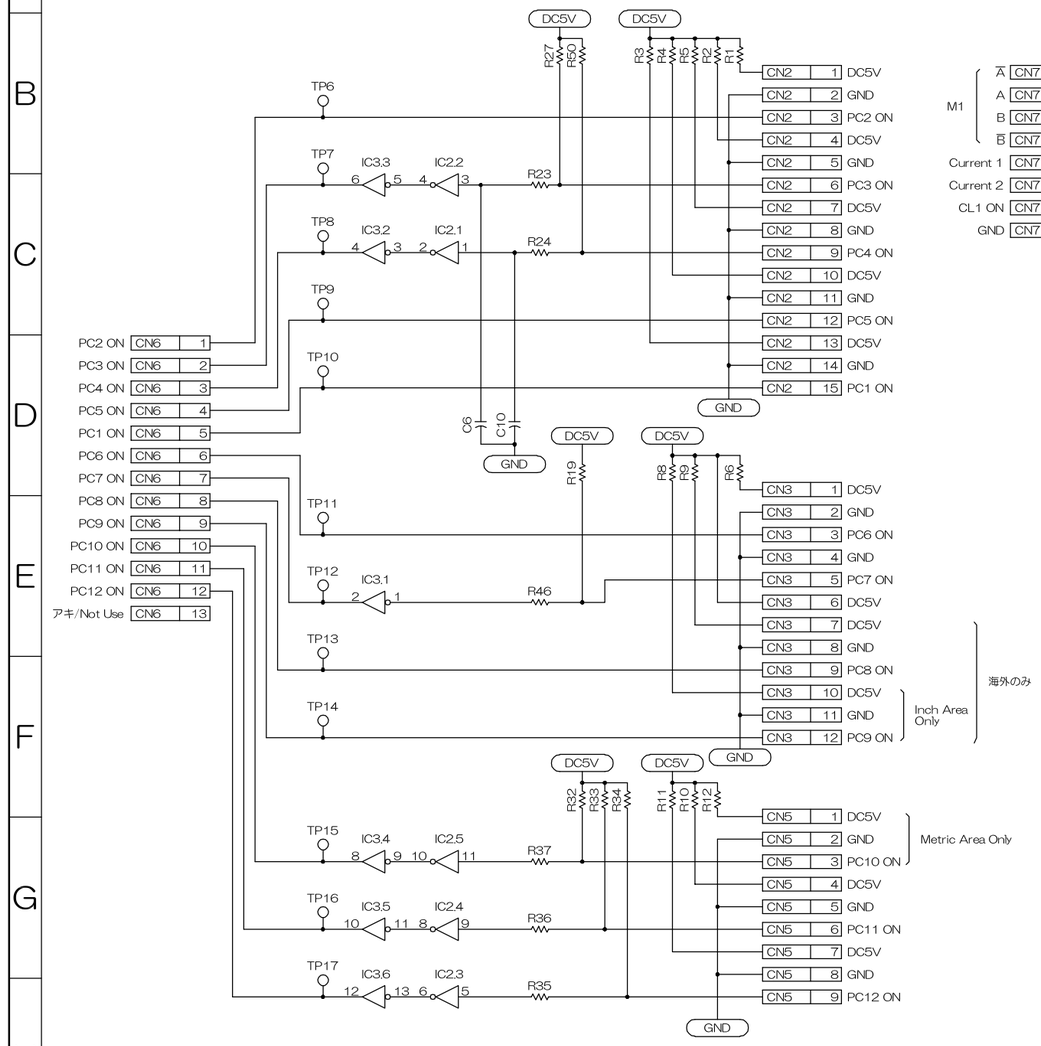

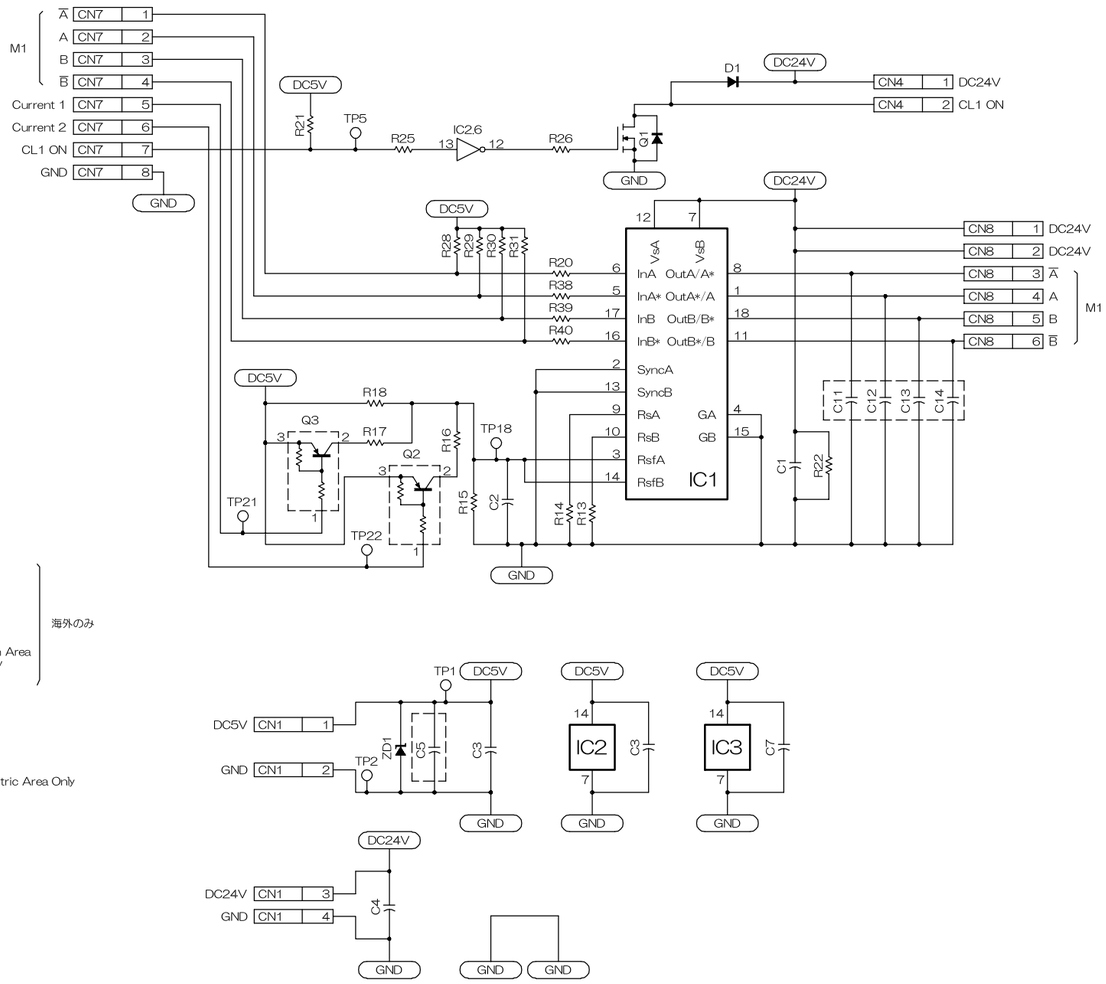

DWG.NO.	4688-C201-0A
TITLE	CIRCUIT DIAGRAM PWB
MODEL	AF-10
VOLTAGE	From the copier
EFFECTIVE MACHINE NO.	XX0201 AND ONWARD
DATE ISSUED	Jun.2001