PF-120

SERVICE MANUAL

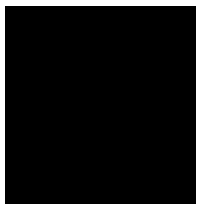

10794

CONTENTS

GENERAL, MECHANICAL/ELECTRICAL

1. SPECIFICATIONS M-1
2. COMPONENT IDENTIFICATION M-1
3. CROSS-SECTIONAL VIEW M-2
4. DRIVE SYSTEM COMPONENT LAYOUT M-2
5. ELECTRICAL PARTS LAYOUT M-3
6. PAPER TAKE-UP/FEEDING SECTION M-4
   - 6-1. Edge Guide and Trailing Edge Stop M-4
   - 6-2. Paper Lifting Plate M-4
   - 6-3. Tray-in-Position Detection M-5
   - 6-4. Paper Empty Detection M-5
   - 6-5. Paper Size Detecting Mechanism M-6
   - 6-6. Paper Separating Mechanism M-7
   - 6-7. Paper Take-Up Control M-8
   - 6-8. Paper Take-Up Retry Control M-9

DIS/REASSEMBLY, ADJUSTMENT

1. DISASSEMBLY D-1
   - 1-1. Maintenance Schedule D-1
   - 1-2. Removal of the Paper Take-Up Rollers D-2
   - 1-3. Cleaning of the Paper Take-Up Roller/Rolls D-2
   - 1-4. Cleaning of the Vertical Transport Roller/Rolls D-3
2. ADJUSTMENT D-4
   - 2-1. Adjust Mode Setting Procedure D-4
   - 2-2. CD Registration Adjustment D-4

MISFEED DETECTION

1. MISFEED DETECTION T-1
   - 1-1. Location of Misfeed Detecting Sensors T-1
   - 1-2. Misfeed Detection Timing T-2

GENERAL, MECHANICAL/ELECTRICAL

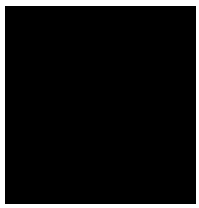

1. SPECIFICATIONS

Type	: Paper Feed Cabinet
Installation	: Installs in the bottom of the Main Unit. (Fixed to the Main Unit by plates and screws.)
Type of Copy Paper	: Plain paper, Recycled paper (60 to 90 g/m^2 or 16 to 24 lbs.)
Paper Sizes	: Metric Areas: A5C, B5L/C, A4L/C, FLS, B4L, A3L Inch Areas: 8-1/2 × 5-1/2C, 11 × 8-1/2C, 8-1/2 × 11L, 8-1/2 × 14L, 11 × 14, 11 × 17 (L: Lengthwise, C: Crosswise)
Registration	: Center
Capacity	: 250 sheets
Power Requirements	: DC24 V, DC5 V (supplied from copier)
Max. Power Consumption	: 9 W or less
Dimensions	: Width: 590 mm or 23-1/4 Depth: 558 mm or 22 Height: 108 mm or 4-1/4
Weight	: 5.5 kg or 12-1/4 lbs.

2. COMPONENT IDENTIFICATION

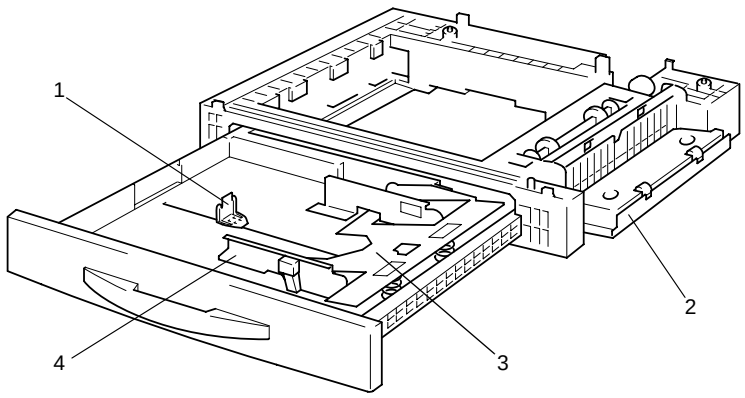

4686M004AA

1. Trailing Edge Stop
2. Side Door
3. Paper Lifting Plate
4. Edge Guide

3. CROSS-SECTIONAL VIEW

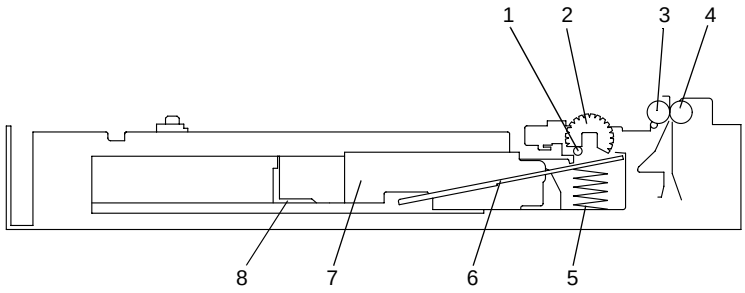

4686M001AC

1. Paper Take-Up Roll
2. Paper Take-Up Roller
3. Vertical Transport Roller
4. Vertical Transport Roll
5. Paper Lifting Spring
6. Paper Lifting Plate
7. Edge Guide
8. Trailing Edge Stop

4. DRIVE SYSTEM COMPONENT LAYOUT

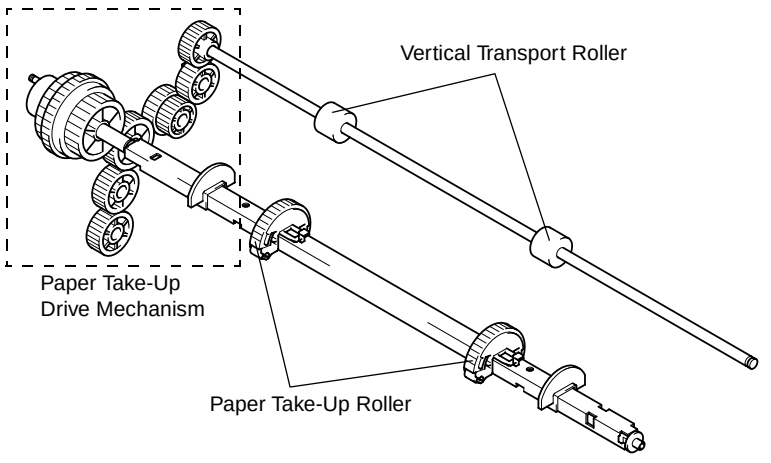

4686M003AA

5. ELECTRICAL PARTS LAYOUT

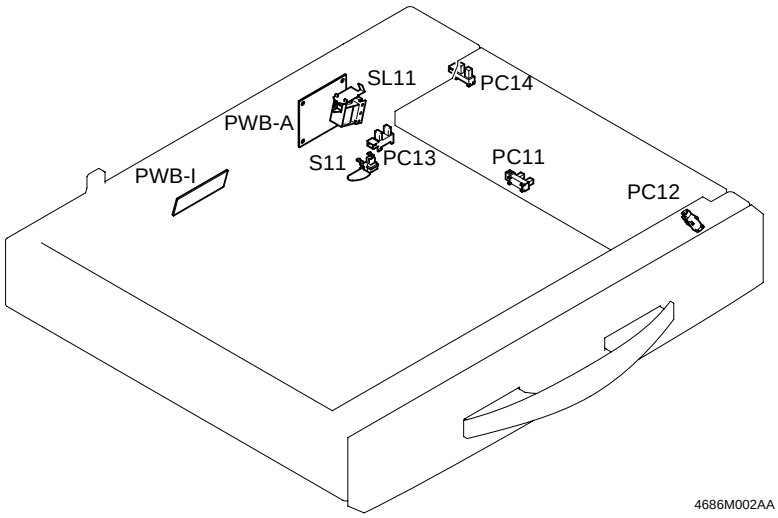

Symbol	Name	Symbol	Name
PWB-A	Control Board	PC11	Paper Empty Sensor
PWB-I	Paper Size (FD) Detection Board	PC12	Paper Take-Up Sensor
S11	Paper Size (CD) Detection Sensor	PC13	Drawer Set Sensor
SL11	Paper Take-Up Solenoid	PC14	Side Door Sensor

6. PAPER TAKE-UP/FEEDING SECTION

6-1. Edge Guide and Trailing Edge Stop

- The Edge Guide and Trailing Edge Stop can be slid into any desired position.

Trailing Edge Stop

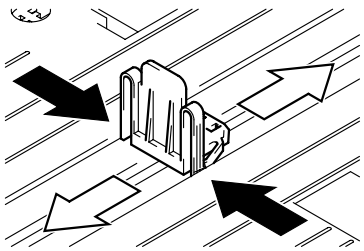

4686M005AA

Edge Guide

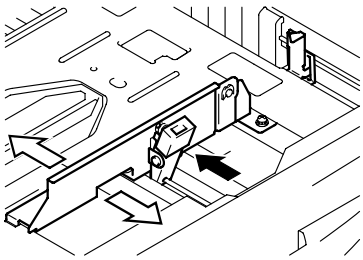

4686M009AA

6-2. Paper Lifting Plate

- The Paper Lifting Plate is locked into position when it is pressed down. It is unlocked when the tray is slid into the unit.
- The Paper Lifting Plate is pushed upward by the Paper Lifting Springs at all times.

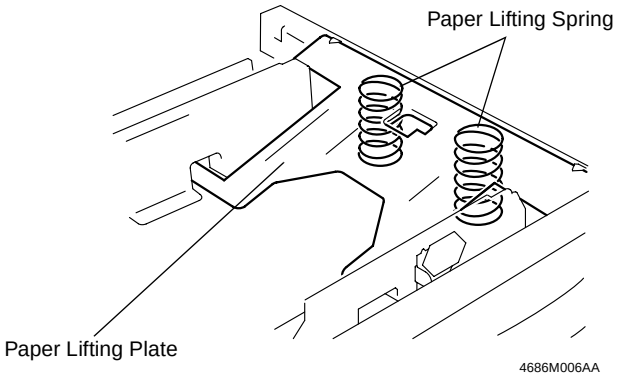

4686M006AA

6-3. Tray-in-Position Detection

- When a tray is slid into the cabinet, the Drawer Set Sensor is blocked and the copier determines that the tray has been slid in position.

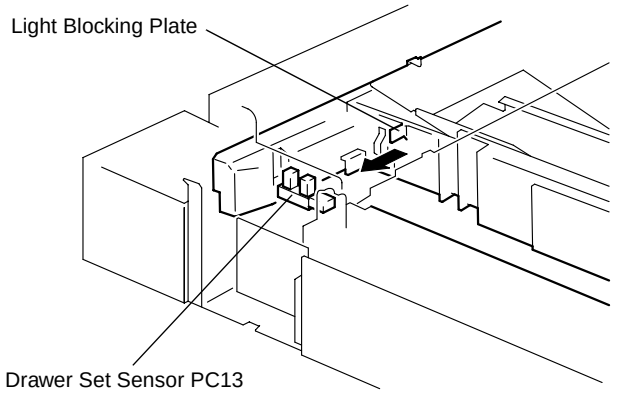

6-4. Paper Empty Detection

- The Paper Empty Sensor detects a paper-empty condition in the tray.

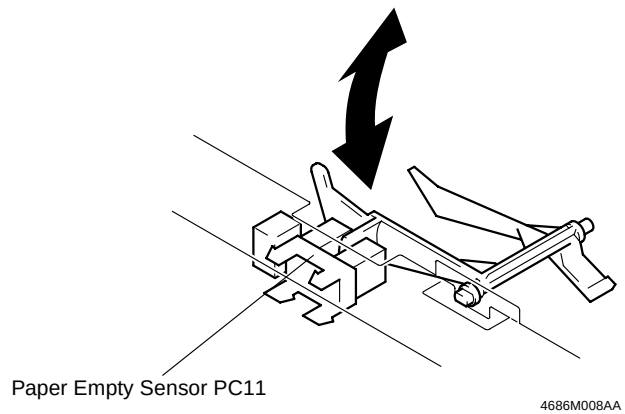

6-5. Paper Size Detecting Mechanism

- Both the width (in the crosswise direction) and length (in the feeding direction) of the paper are detected and the copier CPU determines the paper size based on the combination of the two readings.
- The width (CD) of the paper is detected when the lever that is operatively connected to the Edge Guide activates or deactivates the Paper Size (CD) Detection Sensor.
- The length (FD) of the paper is detected when the lever that is operatively connected to the Trailing Edge Stop actuates or deactuates the switches on the Paper Size (FD) Detection Board.

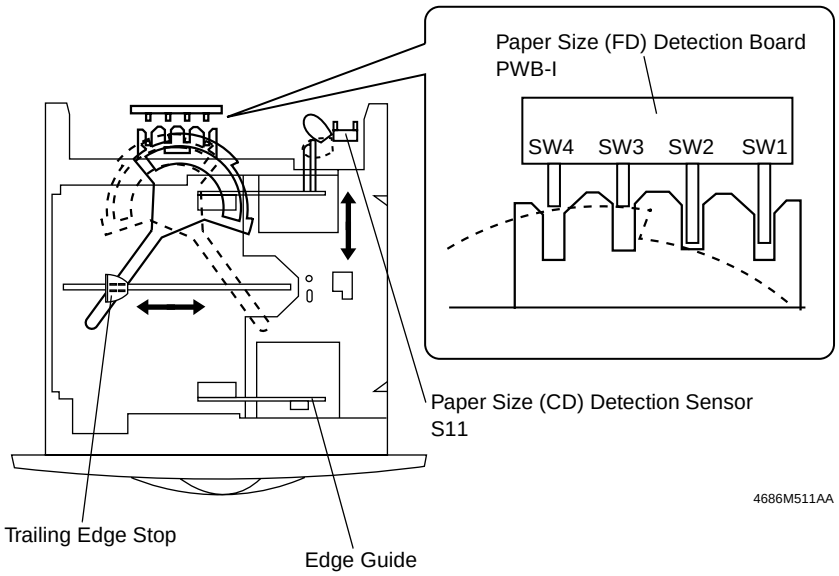

Paper Size	Paper Size (FD) Detection Board PWB-I				Paper Size (CD) Detection Sensor S11
	SW4	SW3	SW2	SW1	
A3L, LedgerL	ON	—	—	—	ON
11 × 14	—	—	—	—	ON
B4L, LegalL	—	—	—	—	—
FLS	—	—	—	ON	—
A4L	—	ON	ON	ON	—
B5L, LetterL	ON	ON	ON	ON	—
A4C, LetterC	ON	ON	—	—	ON
B5C	ON	—	—	ON	—
A5C, InvoiceC	—	—	ON	—	—

6-6. Paper Separating Mechanism

- A loop is formed in the paper between the Separator Fingers and the Paper Take-Up Roller. The turning force of the Paper Take-Up Roller overcomes the block of the Separator Fingers, causing the top sheet of paper to ride over the fingers and be fed out of the tray into the copier.
- When there are only two sheets of left in the tray and if the friction force of the Paper Lifting Plate is low, the bottom sheet of paper is taken up and fed into the copier with the top sheet of paper. To prevent this situation from occurring, there is a Friction Plate provided on top of the Paper Lifting Plate.
- Before the Paper Take-Up Roller contacts the paper, the Paper Take-Up Roll holds the paper down so that the paper remains stationary before its being taken up by the Paper Take-Up Roller.

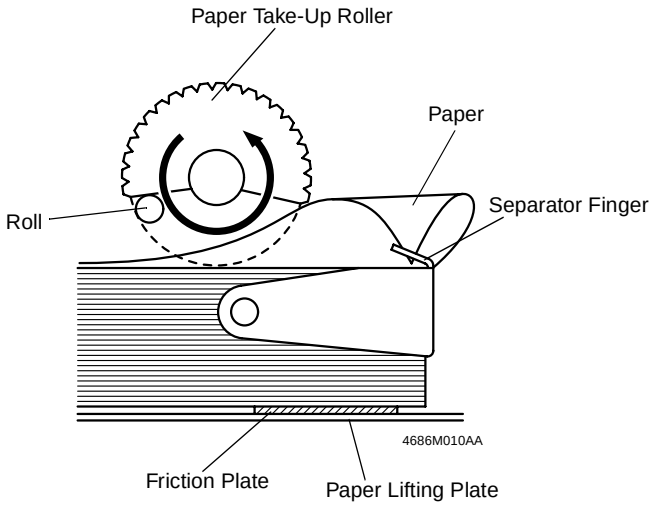

6-7. Paper Take-Up Control

- The operation of the Paper Take-Up Solenoid is controlled by the signal output from PJ3A-1 and 2 of the Control Board.

✻ For the 2nd Tray

(A4 crosswise, two sheets)

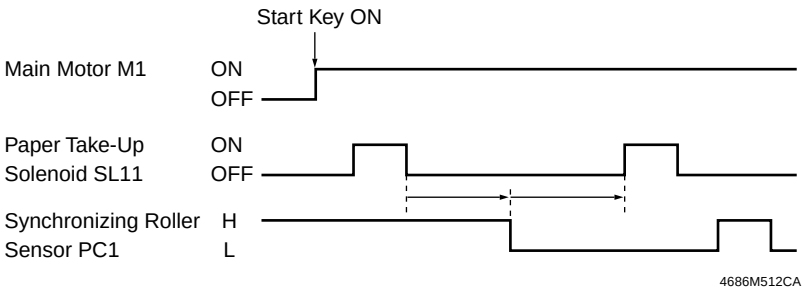

✻ For the 3rd Tray to 5th Tray

(A4 crosswise, two sheets)

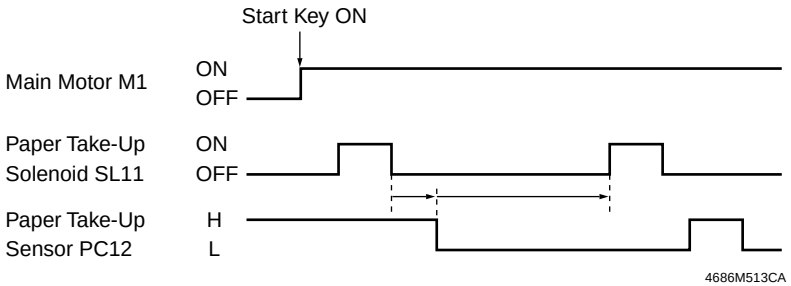

6-8. Paper Take-Up Retry Control

- To minimize the occurrence of paper misfeed, the Paper Take-Up Solenoid is energized a second time to carry out a paper take-up retry sequence if a sheet of paper fails to reach the Synchronizing Roller Sensor (for the 2nd Tray) or the Paper Take-Up Sensor (for the 3rd to 5th Tray) within a given period of time after a paper take-up sequence has been initiated. This sequence is repeated a predetermined number of times.

✻ For the 2nd Tray

	No. of Paper Take-Up Retry Sequences
Paper Take-Up Retry	1

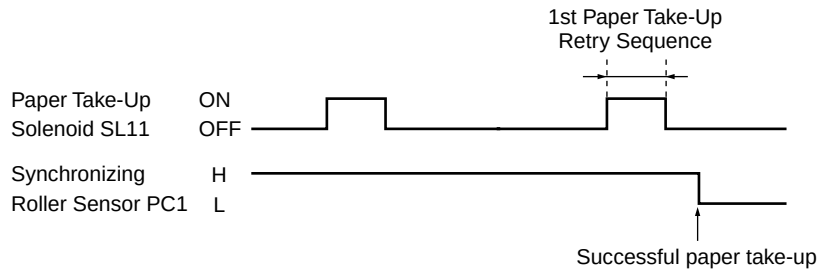

4686M514CA

✻ For the 3rd to 5th Tray

	No. of Paper Take-Up Retry Sequences
Paper Take-Up Retry	2

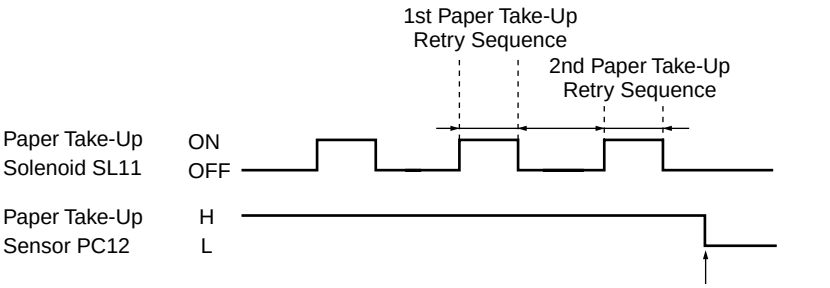

4686M515CA

DIS/REASSEMBLY, ADJUSTMENT

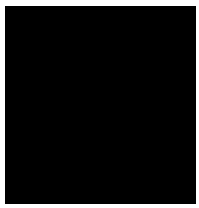

1. DISASSEMBLY

1-1. Maintenance Schedule

PM Parts	Maintenance Schedule Cycle		Tools Used for Cleaning	Parts No.	QTY	PM Counter	Page
	Clean	Replace					
Paper Take-Up Roller/Rolls	❍*1	150 k	Cloth, alcohol	4686-3311-XX	2	2nd Tray 3rd Tray 4th Tray 5th Tray	☞ D-2
Vertical Transport Rollers	❍*2	—		—	2		☞ D-3
Vertical Transport Rolls	❍*2	—		—	2		☞ D-3

NOTE

- *k=1,000 sheets*
- *The above maintenance schedule is to be based on the value of PM Counter. (For how to show the PM Counter on the Display, see "SWITCHES ON PWBs, TECH. REP. SETTINGS" of the Service Manual for the copier.)*
- *Cleaning should be performed when a paper take-up failure occurs for " ❍" marked with *1 and when a paper transport failure occurs for " ❍" marked with *2.*
- *The parts should be replaced for each tray.*
- *See the Parts Manual and Parts Modification Notice for the part number.*
- *The above information is subject to change without notice.*

1-2. Removal of the Paper Take-Up Rollers

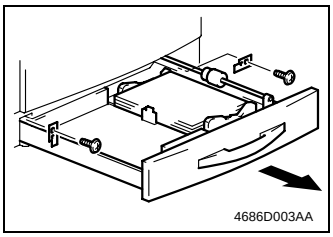

1. Remove two screws, two brackets, and the tray immediately above the one for which the Paper Take-Up Roller is to be replaced.

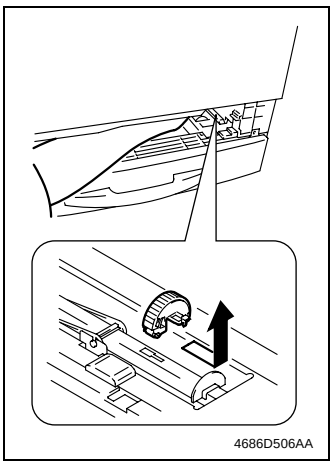

2. Unlock the Paper Take-Up Roller and slide it off its shaft.

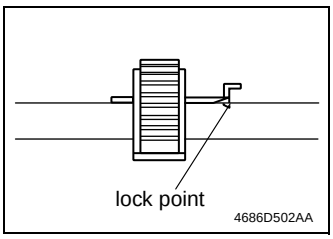

NOTE

- *When installing the roll, make sure it securely locks into place as illustrated.*

1-3. Cleaning of the Paper Take-Up Roller/Rolls

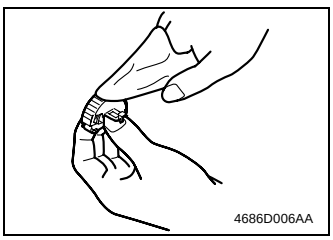

1. Remove the Paper Take-Up Roller/Rolls.
2. Wipe the surface of the Paper Take-Up Roller/ Rolls clean with a soft cloth dampened with alcohol.

1-4. Cleaning of the Vertical Transport Roller/Rolls

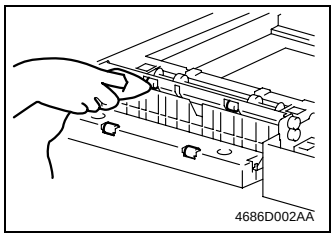

1. Open the Side Door.
2. Wipe the surface of the Vertical Transport Roller/ Rolls clean with a soft cloth dampened with alcohol.

2. ADJUSTMENT

2-1. Adjust Mode Setting Procedure

1. Press the Meter Count key.
2. Press the following keys in this order: Stop → 0 → 0 → Stop → 0 → 1.
3. Press the Stop key and then the Start key.

2-2. CD Registration Adjustment

Requirement:

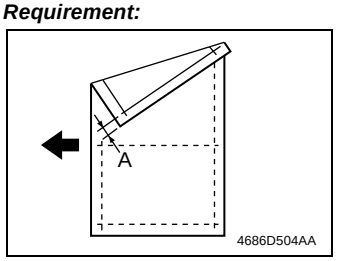

Dimension A on the test print produced should meet the following specifications.

✻ Specifications
A4C: 20 ± 2.0 mm
LetterC: 11.2 ± 2.0 mm

NOTE
- *This adjustment should be made whenever the PH has been replaced with a new one.*
- *Load the tray with A4C or LetterC paper.*

Adjustment Procedure
1. Set the copier into the Adjust mode.
2. With “AJ-” shown on the Display, enter the code number “12” from the 10-Key Pad.
3. Press the Paper key and select the tray.
4. Press the Start key to let the copier produce a test print.
5. Check that dimension A on the test print meets the specifications.

✻ Perform the following steps if dimension A falls outside the specified range.

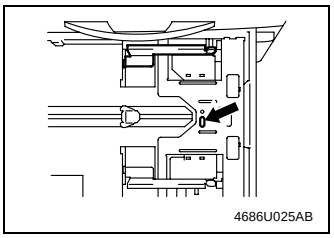

6. Unload the paper stack from the tray. Loosen one screw shown and adjust the position of the Edge Guide in the rear.

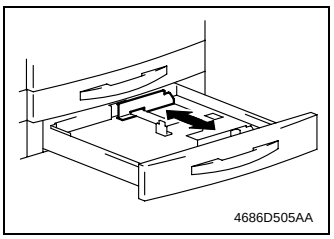

Setting Procedure
- *If dimension A on the test print is longer than the specified range, move the Edge Guide to the rear.*
- *If dimension A on the test print is shorter than the specified range, move the Edge Guide to the front.*

7. Let the copier produce another test print and check dimension A once again.

MISFEED DETECTION

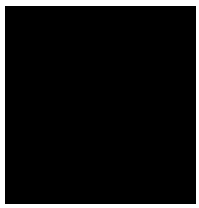

1. MISFEED DETECTION

1-1. Location of Misfeed Detecting Sensors

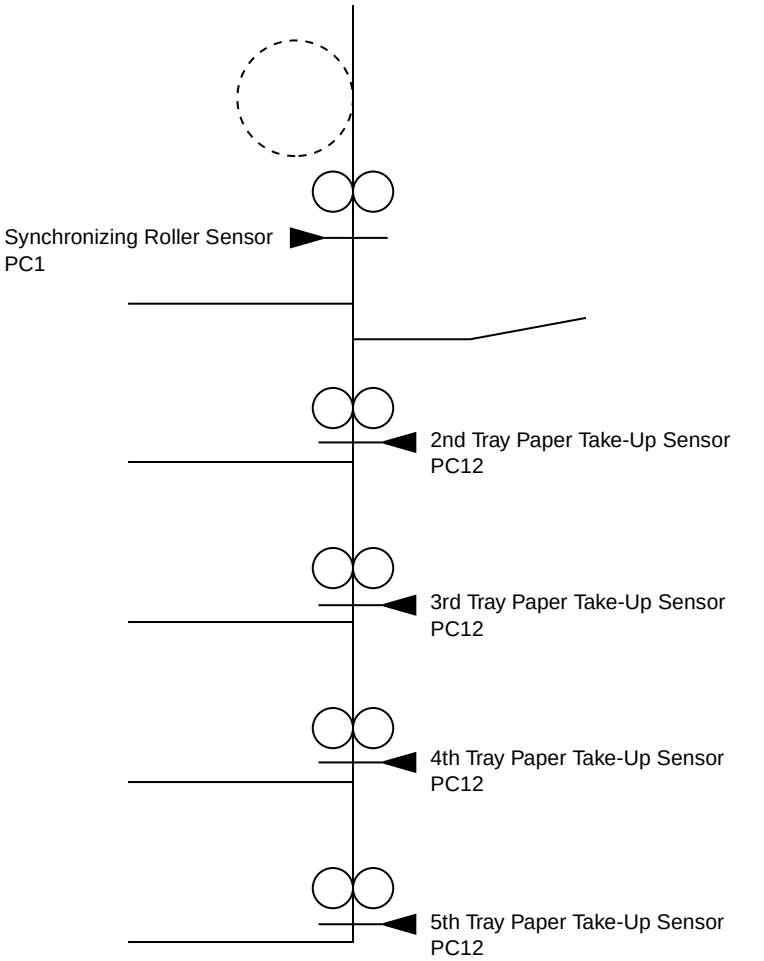

4686T512AA

1-2. Misfeed Detection Timing

- The following lists the types of misfeed detection and detection timings for different misfeed locations.
- The symbol “L” (for the leading edge) and “T” (for the trailing edge) given in ( ) indicate the particular edge of the paper detected by the sensor.

Type	Detection Start	Detection
Paper left	Power Switch ON	Paper Take-Up Sensor of each tray activated
	Misfeed reset	
2nd Tray paper take-up failure	Paper Take-Up Solenoid of the 2nd Tray energized	Synchronizing Roller Sensor (L)
3rd Tray paper take-up failure	Paper Take-Up Solenoid of the 3rd Tray energized	3rd Tray Paper Take-Up Sensor (L)
4th Tray paper take-up failure	Paper Take-Up Solenoid of the 4th Tray energized	4th Tray Paper Take-Up Sensor (L)
5th Tray paper take-up failure	Paper Take-Up Solenoid of the 5th Tray energized	5th Tray Paper Take-Up Sensor (L)
Misfeed at 3rd Tray vertical transport section	3rd Tray Paper Take-Up Sensor (L)	Synchronizing Roller Sensor (L)
Misfeed at 4th Tray vertical transport section	4th Tray Paper Take-Up Sensor (L)	3rd Tray Paper Take-Up Sensor (L)
Misfeed at 5th Tray vertical transport section	5th Tray Paper Take-Up Sensor (L)	4th Tray Paper Take-Up Sensor (L)
2nd Tray size error misfeed	Synchronizing Roller Sensor (L)	Synchronizing Roller Sensor (T)
3rd Tray size error misfeed	3rd Tray Paper Take-Up Sensor (L)	3rd Tray Paper Take-Up Sensor (T)
4th Tray size error misfeed	4th Tray Paper Take-Up Sensor (L)	4th Tray Paper Take-Up Sensor (T)
5th Tray size error misfeed	5th Tray Paper Take-Up Sensor (L)	5th Tray Paper Take-Up Sensor (T)

給紙ソレノイド/
Paper Take-Up Solenoid

SL11

CN53

ペーパーサイズFD検出基板/
Paper Size Detection
Board(FD)

PWB-I

PJ1I

SIZE1
SIZE2
SIZE3
SIZE4
GND

ペーパーサイズCD検出センサ/
Paper Size Detection Sensor(CD)

S11

PJ56

GY

※下段カセットより/
From the lower cassette

※増設カセット２段以上の場合/
In case of two add-on paper cassettes or more

PJ2A

DC24V
DC24V
GND
GND
GND
DC5V
RTS
TXD *1
RXD *2
CLK
AO0
AO1
AO2
アキ/Not Use

PJ3A

A<BL>
アキ/Not Use
アキ/Not Use
GND
S11 A
GND
SIZE4
SIZE3
SIZE2
SIZE1
アキ/Not Use
GND
SL11 ON

B<W>
GND
PC12 ON
DC5V
GND
PC11 ON
DC5V
GND
PC14 ON
DC5V
GND
PC13 ON
DC5V

PWB-A
制御基板/
Control Board

PJ1A

DC24V
DC24V
GND
GND
GND
DC5V
RTS
TXD *1
RXD *2
CLK
AI0
AI1
AI2

CN25

R
R
GR
GR
GR
Y
GY
GY
GY
GY
GY
GY
GY

本体/
From the
Copier

PJ52
PC13
トレイセットセンサ/
Drawer Set Sensor

PJ55
PC14
サイドドアセンサ/
Side Door Sensor

PJ54
PC11
ペーパーエンプティセンサ/
Paper Empty Sensor

PJ53
PC12
給紙センサ/
Paper Take-Up Sensor

*1
TXD:送信データ/Transmission Data

*2
RXD:受信データ/Reception Data

DWG.NO.	4686-C001-0A
TITLE	WIRING DIAGRAM
MODEL	PF-120
VOLTAGE	From the copier
EFFECTIVE MACHINE NO.	XX0201 AND ONWARD
DATE ISSUED	Aug.2001

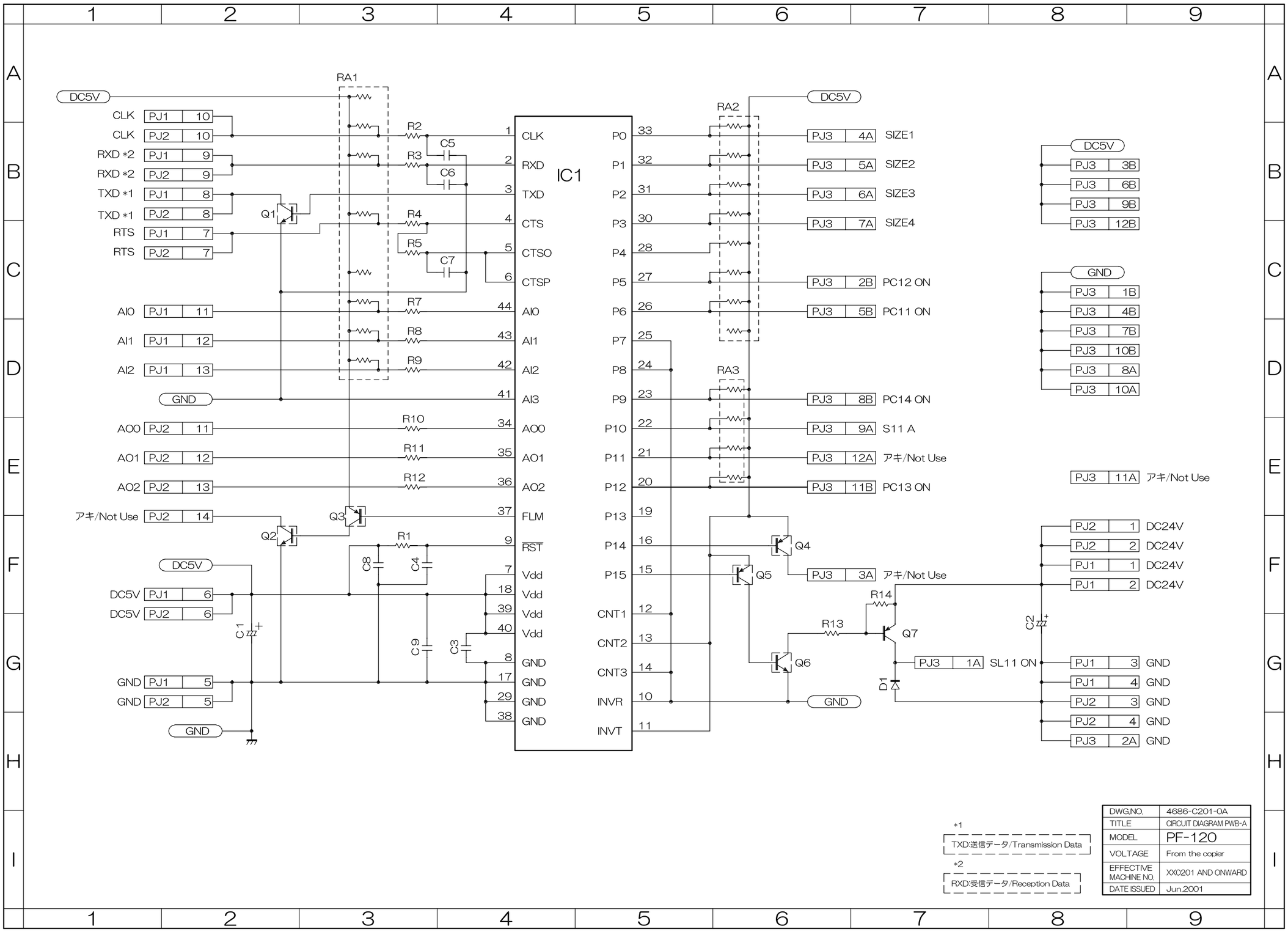

DWG.NO.	4686-C201-0A
TITLE	CIRCUIT DIAGRAM PWB-A
MODEL	PF-120
VOLTAGE	From the copier
EFFECTIVE MACHINE NO.	XX0201 AND ONWARD
DATE ISSUED	Jun.2001