8 Original Size Detecting Section

The original size detecting sensors fixed in the optical section are used to determine the size of the original in the Auto Paper or Auto Size mode.

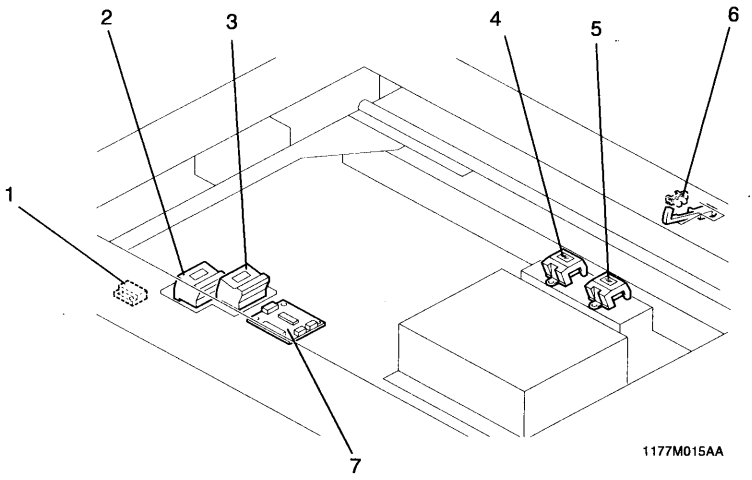

1. Size Reset Switch (S108)
2. Original Size Detecting Sensor CD2 (PC116)
3. Original Size Detecting Sensor CD1 (PC114)
4. Original Size Detecting Sensor FD2 (PC113)
5. Original Size Detecting Sensor FD3 (PC115)
6. Original Cover Detecting Sensor (PC111)
7. Original Size Detecting Board (UN2)

8-1. Original Size Detecting Operation

Each photo receiver of the original size detecting sensors responds to the light, which is emitted by the corresponding LED and reflected off the original, of a given level of intensity. If the intensity of the reflected light exceeds the given level, the size detecting board determines that there is an original.

