8-4. Original Size Detection Timing

- Takes size readings: When the Original Cover is raised to an angle of 15° or more (Original Cover Detecting Sensor is unblocked).
- Affirms size readings: When the Original Cover is lowered to an angle of 15° or less (Original Cover Detecting Sensor is blocked) and the Size Reset Switch is actuated. Or, when the Start key is pressed with the Original Cover Detecting Sensor in the deactivated state.
- Resets size readings: When the Original Cover is raised and the Size Reset Switch is deactuated.

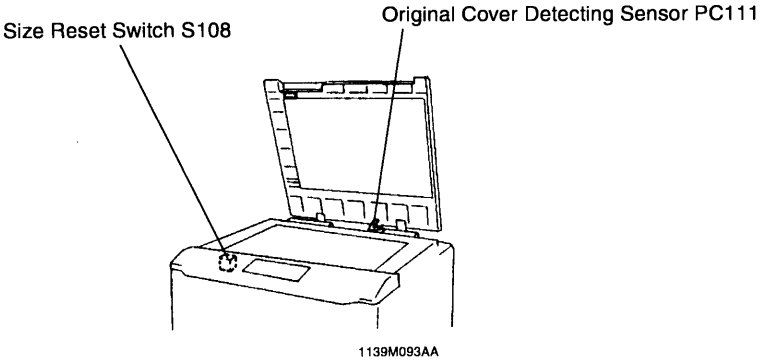

	CONTROL SIGNAL	Blocked	Unblocked	WIRING DIAGRAM
PC111	PWB-A PJ13A-12B	L	H	11-A

	CONTROL SIGNAL	ON	OFF	WIRING DIAGRAM
S108	PWB-A PJ23A-13	H	L	8-B