9 PH SECTION

Image data sent from the memory section is corrected and, based on the corrected data, a laser beam is projected onto the surface of the PC Drum to form a corresponding latent image.

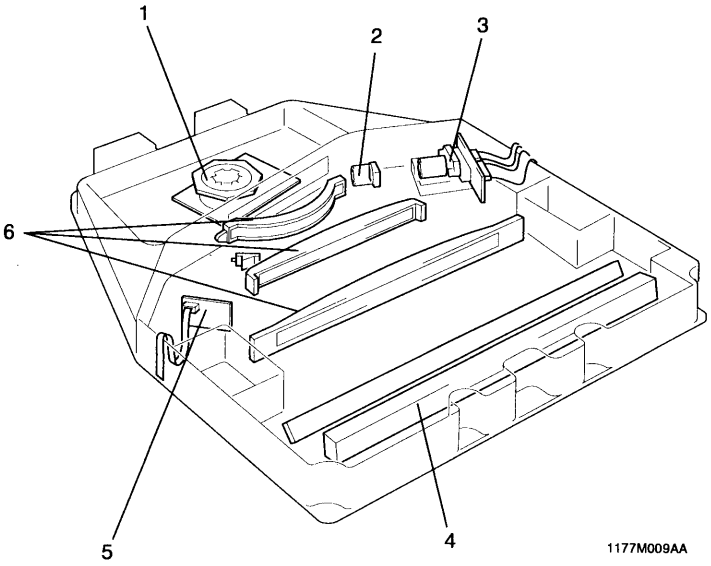

1. Polygon Motor
2. Cylindrical Lens
3. LD Board (PWB-B)
4. Return Mirror
5. SOS Sensor Board (PWB-C)
6. Lenses