9-2. Laser Exposure Process

Start key ON

↓

Laser Diode is turned ON.

↓

The laser beam strikes the SOS Sensor Board and generates an SOS signal.

↓

The SOS signal sets a uniform laser-ON timing for each main scanning line.

↓

The Master Board generates signals that indicate the laser emission area in the main and sub scanning directions.

↓

The laser light strikes the surface of the PC Drum to form an electrostatic latent image.

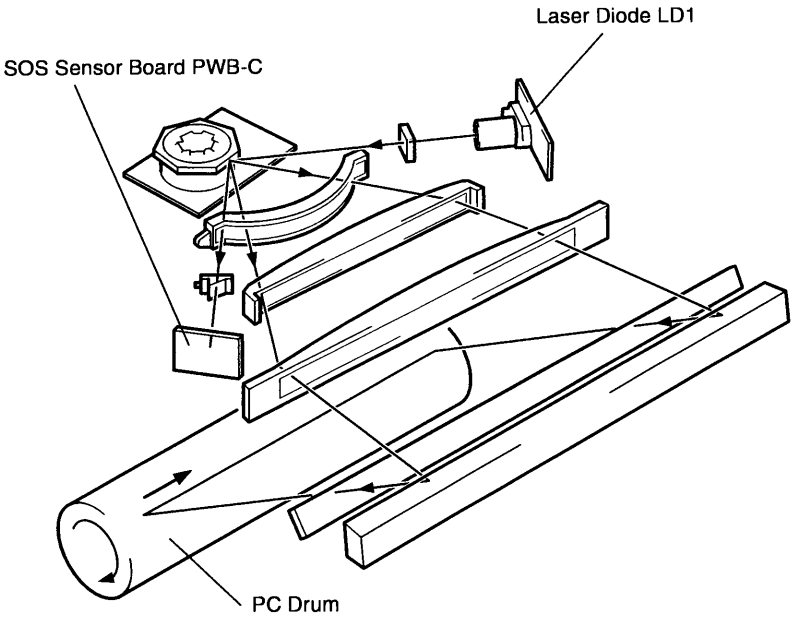

1177M005AA