10 DEVELOPING UNIT SECTION

The Developing Unit agitates and triboelectrically charges toner so that it is attracted to the electrostatic latent image formed on the surface of the PC Drum, changing the image to a visible, developed one.

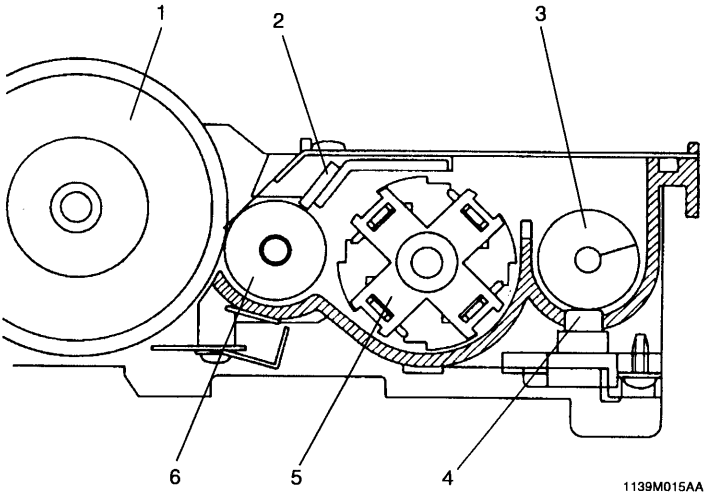

1. PC Drum
2. Doctor Blade
3. Developer Mixing Screw
4. ATDC Sensor (UN3)
5. Bucket Roller
6. Sleeve/Magnet Roller