10-1. Developing Unit Drive Mechanism

The rollers and screws are driven through a gear train from the motor.

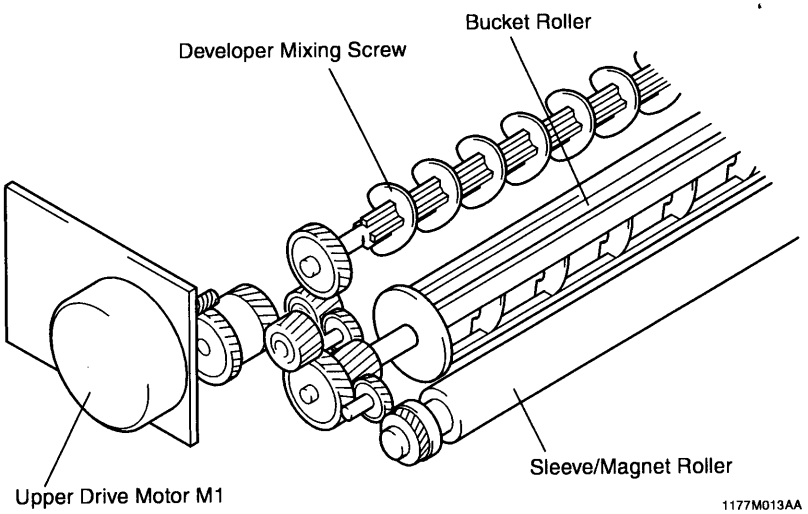

10-2. Sleeve/Magnet Roller

- The Sleeve/Magnet Roller, which consists of an outer sleeve roller and an inner magnet roller, conveys developer to the point of development.
- The magnetic force of the magnet roller at the point of development is the strongest so that the developer brush stands straight up to deliver the greatest amount of toner to the point of development.

