10-3. Doctor Blade

The Doctor Blade controls the height of the developer brush, ensuring that the developer on the Sleeve/Magnet Roller is at a uniform height.

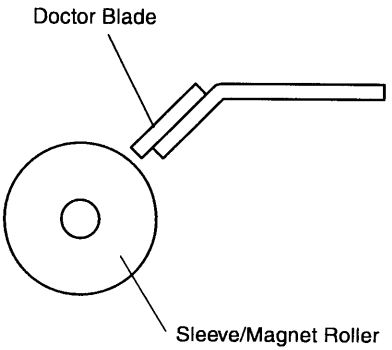

1177M061AA

10-4. Developing Bias

- A developing bias voltage (Vb) is applied to the sleeve roller to prevent a foggy background on the copy.
- The amount of toner attracted onto the surface of the PC Drum depends on how much lower the PC Drum surface potential (Vi) is than Vb (potential difference).

When the potential difference is large, a greater amount of toner is attracted.
When the potential difference is small, a smaller amount of toner is attracted.

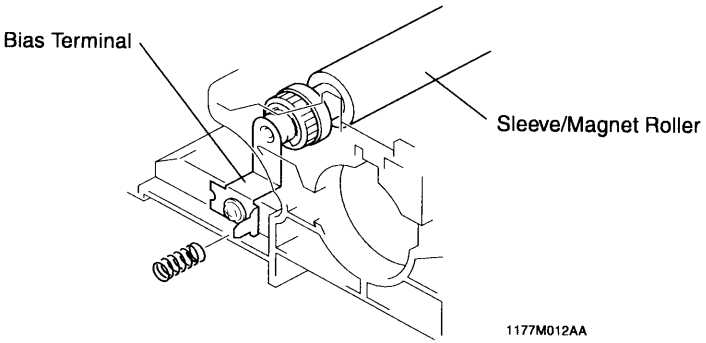

1177M012AA

	CONTROL SIGNAL	ON	OFF	WIRING DIAGRAM
Developing Bias (AC)	PWB-A PJ8A-5	L	H	2-H
Developing Bias (DC)	PWB-A PJ8A-4	L	H	2-H