11 PAPER TAKE-UP/FEED SECTION

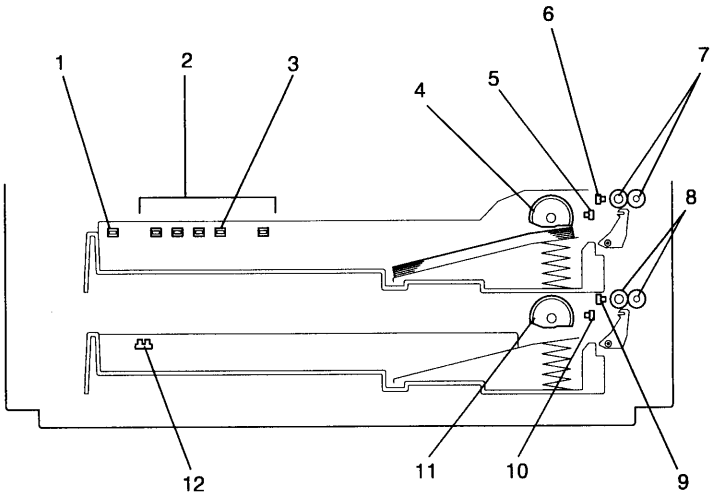

1177M022AB

1. Inch/Metric Switch S66
2. Paper Size Detecting Switch 1~4 S61~S64
3. 1st Drawer Set Switch S65
4. 1st Drawer Paper Take-Up Roll
5. 1st Drawer Paper Empty Sensor PC101
6. 1st Drawer Paper Take-Up Sensor PC55
7. Vertical Transport Rollers 1
8. Vertical Transport Rollers 2
9. 2nd Drawer Paper Take-Up Sensor PC56
10. 2nd Drawer Paper Empty Sensor PC102
11. 2nd Drawer Paper Take-Up Roll
12. 2nd Drawer Set Sensor PC69