11-3. Universal Tray Paper Size Detection Mechanism

- Both the width (in the crosswise direction) and length (in the feeding direction) of the paper are detected and the copier CPU determines the paper size based on the combination of the two readings.
- If the drawer is equipped with an inch/metric selector switch, it can be used to select the appropriate paper type (inch or metric).

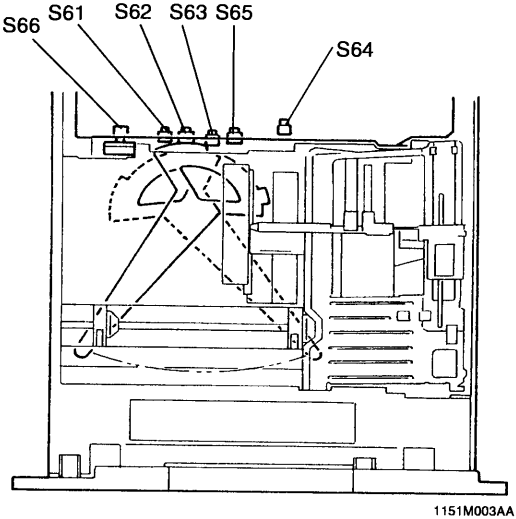

1151M003AA

S61: Paper Size Detecting Switch 1
S62: Paper Size Detecting Switch 2
S63: Paper Size Detecting Switch 3
S64: Paper Size Detecting Switch 4
S65:1st Drawer Set Switch
S66: Inch/Metric Switch

Metric Area		Inch Area		Paper Size Detecting Switch			
Inch/Metric Switch S66				FD			CD
Metric	Inch	Metric	Inch	S61	S62	S63	S65
A3L		A3L		ON	ON	ON	OFF
B4L				ON	ON	OFF	OFF
FLS		FLS		ON	OFF	OFF	OFF
A4L		A4L		OFF	OFF	OFF	OFF
B5L				OFF	OFF	ON	OFF
A5L		A5L		OFF	ON	ON	OFF
A4C		A4C		OFF	ON	ON	ON
B5C				OFF	ON	OFF	OFF
	11" x 17"		11" x 17"	ON	ON	ON	ON
			11" x 14"	ON	ON	OFF	ON
	8-1/2" x 14"		8-1/2" x 14"	ON	ON	OFF	OFF
	8-1/2" x 11"		8-1/2" x 11"	OFF	OFF	OFF	OFF
			11" x 8-1/2"	OFF	ON	ON	ON
	5-1/2" x 8-1/2"		5-1/2" x 8-1/2"	OFF	ON	ON	OFF