## 11-4. Paper Take-Up Mechanism

Drive for the paper take-up sequence is transmitted via the Paper Take-Up Solenoid from a motor.

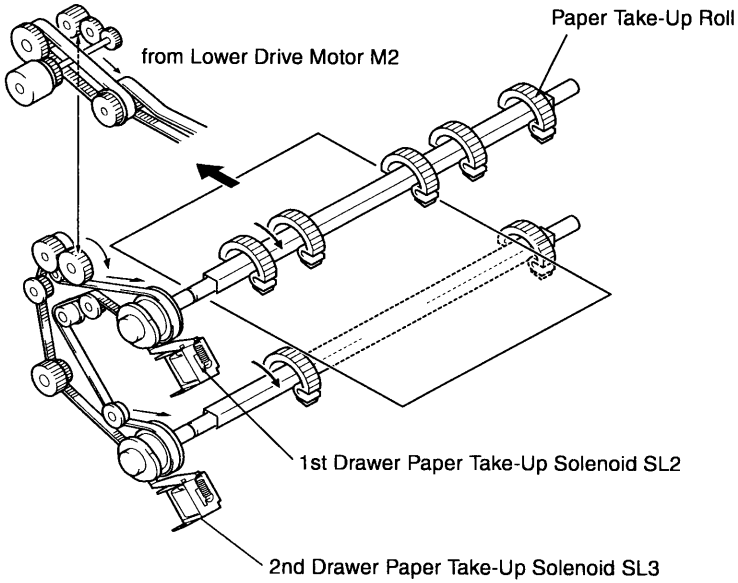


### (1) Paper Separating Mechanism

A loop is formed in the paper between the Separator Fingers and the Paper Take-Up Roll. The turning force of the Paper Take-Up Roll overcomes the block of the Separator Fingers, causing the top sheet of paper to ride over the fingers and be fed out of the drawer into the copier.

