11-5. Paper Take-Up Roll

Since the paper is wedged in the mechanism when the drawer is slid out of the copier if the Paper Take-Up Roll is round in shape, the roll is semicircular and the circular part of the roll is positioned on top at all times other than take-up.

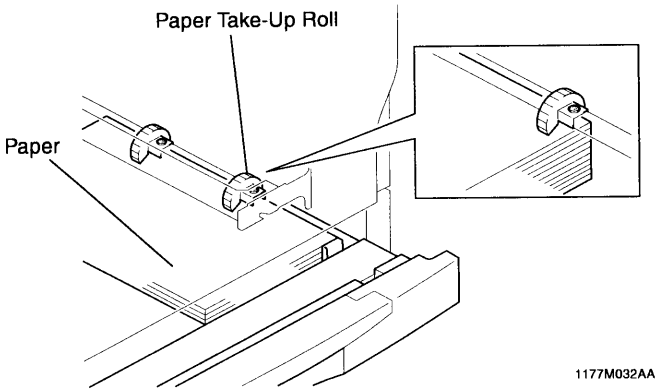

11-6. Paper Take Up Control

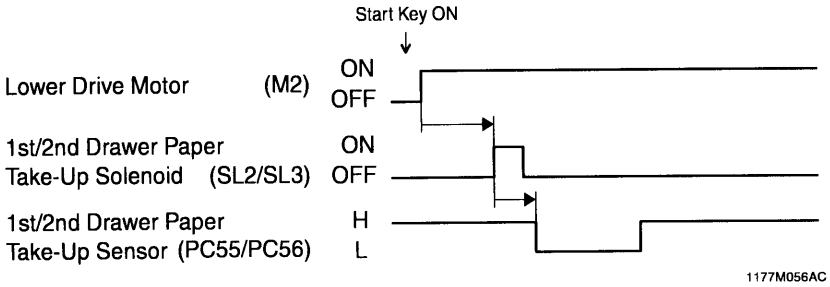

	CONTROL SIGNAL	ON	OFF	WIRING DIAGRAM
M2	PWB-A PJ16A-5	L	H	18-B
SL2	PWB-A PJ4A-9	L	H	11-F
SL3	PWB-A PJ3A-2	L	H	11-F

	CONTROL SIGNAL	Blocked	Unblocked	WIRING DIAGRAM
PC55	PWB-A PJ4A-2	L	H	11-E
PC56	PWB-A PJ3A-7	L	H	11-G