12 MANUAL FEED SECTION

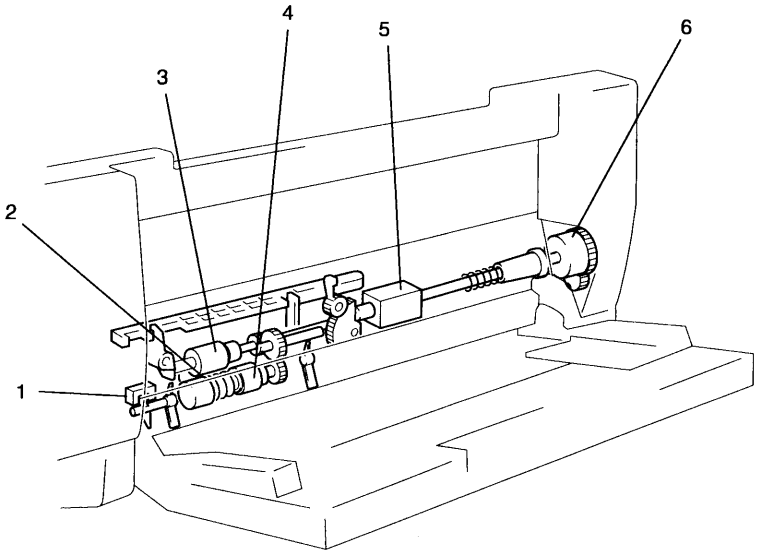

1. Manual Feed Empty Sensor PC31
2. Manual Bypass Separator Roll
3. Manual Bypass Feed Roll
4. Manual Bypass Take-Up Roll
5. Manual Feed Paper Take-Up Solenoid SL51
6. Manual Feed Paper Take-Up Clutch CL51